Current Transducer HO-S series

I_{PN} = 50, 100, 150, 200, 250 A

Ref: HO 50-S, HO 100-S, HO 150-S, HO 200-S, HO 250-S

For the electronic measurement of current: DC, AC, pulsed..., with galvanic separation between the primary and the secondary circuit.

Features

- Open loop multi-range current transducer
- Voltage output
- Single power supply +5 V
- Over-current detect 2.93 x I_{PN} (peak value)
- Galvanic separation between primary and secondary circuit
- Low power consumption
- Compact design for panel mounting
- Aperture: 15 x 8 mm
- Factory calibrated
- Connection mating with JST:
  - housing PHR-5
  - contact SPH-00xT.
- **Dedicated parameter settings available on request (see page 10).**

Advantages

- Low offset drift
- Over-drivable V_{ref}
- 8 mm creepage /clearance
- Fast response
- Low profile 2 mm pitch connector for wire AWG 32 to 24.

Applications

- AC variable speed and servo motor drives
- Static converters for DC motor drives
- Battery supplied applications
- Uninterruptible Power Supplies (UPS)
- Switched Mode Power Supplies (SMPS)
- Power supplies for welding applications
- Combiner box
- MPPT.

Standards

- EN 50178: 1997
- IEC 61010-1: 2010
- IEC 61326-1: 2012
- UL 508: 2010 (pending).

Application Domain

- Industrial.

LEM reserves the right to carry out modifications on its transducers, in order to improve them, without prior notice

Absolute maximum ratings

Parameter	Symbol	Unit	Value
Supply voltage (not destructive)	U_C	V	8
Supply voltage (not entering non standard modes)	U_C	V	6.5
Primary conductor temperature	T_B	°C	120
ESD rating, Human Body Model (HBM)	U_{ESD}	kV	2

Stresses above these ratings may cause permanent damage. Exposure to absolute maximum ratings for extended periods may degrade reliability.

Insulation coordination

Parameter	Symbol	Unit	Value	Comment
Rms voltage for AC insulation test 50/60Hz/1 min	U_d	kV	4.3	
Impulse withstand voltage 1.2/50 µs	$\hat{U}_W$	kV	8	
Partial discharge extinction rms voltage @ 10 pC	U_e	V	>1200	Busbar / Secondary
Clearance (pri. - sec.)	d_{Cl}	mm	>8	Shortest distance through air
Creepage distance (pri. - sec.)	d_{Cp}	mm	>8	Shortest path along device body
Clearance (pri. - sec.)	-	mm	>8	When mounted on PCB with recommended layout
Case material	-	-	V0 according to UL 94	
Comparative tracking index	*CTI*	-	600	
Application example	-	-	600 V CAT III PD2	Reinforced insulation, non uniform field according to EN 50178, EN 61010
Application example	-	-	1000 V CAT III PD2	Based insulation, non uniform field according to EN 50178, EN 61010
Application example	-	-	600 V CAT III PD2	Simple insulation, non uniform field according to UL 508

Environmental and mechanical characteristics

Parameter	Symbol	Unit	Min	Typ	Max	Comment
Ambient operating temperature	T_A	°C	-40		105	
Ambient storage temperature	T_S	°C	-40		105	
Mass	m	g		32		

LEM reserves the right to carry out modifications on its transducers, in order to improve them, without prior notice

Electrical data HO 50-S-0100

At T_A = 25 °C, U_C = +5 V, R_L = 10 kΩ unless otherwise noted (see Min, Max, typ. definition paragraph in page 11).

Parameter	Symbol	Unit	Min	Typ	Max	Comment
Primary nominal rms current	I_{PN}	A		50		
Primary current, measuring range	I_{PM}	A	-125		125	@ U_C ≥ 4.6 V
Number of primary turns	N_P	-		1		See application information
Supply voltage [1]	U_C	V	4.5	5	5.5	
Current consumption	I_C	mA		19	25	
Reference voltage (output)	V_{ref}	V	2.48	2.5	2.52	Internal reference
Reference voltage (input)	V_{ref}	V	0.5		2.65	External reference
Output voltage range @ I_{PM}	V_{out} - V_{ref}	V	-2		2	Over operating temperature range
V_{ref} output resistance	R_{ref}	Ω	130	200	300	Series
V_{out} output resistance	R_{out}	Ω		2	5	Series
Allowed capacitive load	C_L	nF	0		6	
OCD output: On resistance	R_{on}	Ω	70	95	150	Open drain, active low Over operating temperature range
OCD output: Hold time	t_{hold}	ms	0.7	1	1.4	Additional time after threshold has released
EEPROM control	V_{out}	mV	0		50	V_{out} forced to GND when EEPROM in an error state [2]
Electrical offset voltage @ I_P = 0 A	V_{OE}	mV	-5		5	V_{out} - V_{ref} @ V_{ref} = 2.5 V
Electrical offset current Referred to primary	I_{OE}	A	-0.3125		0.3125	
Temperature coefficient of V_{ref}	TCV_{ref}	ppm/K	-170		170	-40 °C .. 105 °C
Temperature coefficient of V_{OE}	TCV_{OE}	mV/K	-0.075		0.075	-40 °C .. 105 °C
Offset drift referred to primary @ I_P = 0 A	TCI_{OE}	mA/K	-4.69		4.69	-40 °C .. 105 °C
Theoretical sensitivity	G_{th}	mV/A		16		800 mV@ I_{PN}
Sensitivity error @ I_{PN}	ε_G	%	-0.5		0.5	Factory adjustment (straight bus-bar)
Temperature coefficient of G	TCG	ppm/K	350		350	-40 °C .. 105 °C
Linearity error 0 .. I_{PN}	ε_L	% of I_{PN}	-0.75		0.75	
Linearity error 0 .. I_{PM}	ε_L	% of I_{PM}	-0.5		0.5	
Magnetic offset current (@ 10 × I_{PN}) referred to primary	I_{OM}	A	-0.92		0.92	One turn
Reaction time @ 10 % of I_{PN}	t_{ra}	µs			2.5	@ 50 A/µs
Response time @ 90 % of I_{PN}	t_r	µs			3.5	@ 50 A/µs
Frequency bandwidth (-3 dB)	BW	kHz		100		Small signals
Output rms voltage noise (spectral density) (100 Hz .. 100 kHz)	e_{no}	µV/√Hz			10.2	
Output voltage noise (DC .. 10 kHz) (DC .. 100 kHz) (DC .. 1 MHz)	V_{no}	mVpp			 5.6 16.3 30.6	
Over-current detect		A	2.64 x I_{PN}	2.93 x I_{PN}	3.22 x I_{PN}	Peak value ±10 %
Accuracy @ I_{PN}	X	% of I_{PN}	-1.25		1.25	
Accuracy @ I_{PN} @ T_A = +105 °C	X	% of I_{PN}	-4.85		4.85	See formula note [3]
Accuracy @ I_{PN} @ T_A = +85 °C	X	% of I_{PN}	-4.15		4.15	See formula note [3]

Notes: [1] 3.3 V SP version available

[2] EEPROM in an error state makes the transducer behave like a reverse current saturation. Use of the OCD may help to differentiate the two cases.

[3] Accuracy @ X_{TA} (% of I_{PN}) = $X + \left(\frac{TCG}{10000} \cdot (T_A - 25) + \frac{TCI_{OE}}{1000 \cdot I_P} \cdot 100 \cdot (T_A - 25)\right)$.

LEM reserves the right to carry out modifications on its transducers, in order to improve them, without prior notice

Electrical data HO 100-S-0100

At T_A = 25 °C, U_C = +5 V, R_L = 10 kΩ unless otherwise noted (see Min, Max, typ. definition paragraph in page 11).

Parameter	Symbol	Unit	Min	Typ	Max	Comment
Primary nominal rms current	I_{PN}	A		100		
Primary current, measuring range	I_{PM}	A	-250		250	@ U_C ≥ 4.6 V
Number of primary turns	N_P	-		1		See application information
Supply voltage [1]	U_C	V	4.5	5	5.5	
Current consumption	I_C	mA		19	25	
Reference voltage (output)	V_{ref}	V	2.48	2.5	2.52	Internal reference
Reference voltage (input)	V_{ref}	V	0.5		2.65	External reference
Output voltage range @ I_{PM}	V_{out} - V_{ref}	V	-2		2	Over operating temperature range
V_{ref} output resistance	R_{ref}	Ω	130	200	300	Series
V_{out} output resistance	R_{out}	Ω		2	5	Series
Allowed capacitive load	C_L	nF	0		6	
OCD output: On resistance	R_{on}	Ω	70	95	150	Open drain, active low Over operating temperature range
OCD output: Hold time	t_{hold}	ms	0.7	1	1.4	Additional time after threshold has released
EEPROM control	V_{out}	mV	0		50	V_{out} forced to GND when EEPROM in an error state [2]
Electrical offset voltage @ I_P = 0 A	V_{OE}	mV	-5		5	V_{out} - V_{ref} @ V_{ref} = 2.5 V
Electrical offset current Referred to primary	I_{OE}	A	-0.625		0.625	
Temperature coefficient of V_{ref}	TCV_{ref}	ppm/K	-170		170	-40 °C .. 105 °C
Temperature coefficient of V_{OE}	TCV_{OE}	mV/K	-0.075		0.075	-40 °C .. 105 °C
Offset drift referred to primary @ I_P = 0 A	TCI_{OE}	mA/K	-9.375		9.375	-40 °C .. 105 °C
Theoretical sensitivity	G_{th}	mV/A		8		800 mV@ I_{PN}
Sensitivity error @ I_{PN}	ε_G	%	-0.5		0.5	Factory adjustment (straight bus bar)
Temperature coefficient of G	TCG	ppm/K	350		350	-40 °C .. 105 °C
Linearity error 0 .. I_{PN}	ε_L	% of I_{PN}	-0.5		0.5	
Linearity error 0 .. I_{PM}	ε_L	% of I_{PM}	-0.5		0.5	
Magnetic offset current (@10 × I_{PN}) referred to primary	I_{OM}	A	-0.92		0.92	One turn
Reaction time @ 10 % of I_{PN}	t_{ra}	µs			2.5	@ 50 A/µs
Response time @ 90 % of I_{PN}	t_r	µs			3.5	@ 50 A/µs
Frequency bandwidth (-3 dB)	BW	kHz		100		Small signals
Output rms voltage noise (spectral density) (100 Hz .. 100 kHz)	e_{no}	µV/√Hz			6	
Output voltage noise (DC .. 10 kHz) (DC .. 100 kHz) (DC .. 1 MHz)	V_{no}	mVpp			 3.6 8.7 16.9	
Over-current detect		A	2.64 x I_{PN}	2.93 x I_{PN}	3.22 x I_{PN}	Peak value ±10 %
Accuracy @ I_{PN}	X	% of I_{PN}	-1		1	
Accuracy @ I_{PN} @ T_A = +105 °C	X	% of I_{PN}	-4.6		4.6	See formula note [3]
Accuracy @ I_{PN} @ T_A = +85 °C	X	% of I_{PN}	-3.9		3.9	See formula note [3]

Notes: [1] 3.3 V SP version available

[2] EEPROM in an error state makes the transducer behave like a reverse current saturation. Use of the OCD may help to differentiate the two cases.

[3] Accuracy @ X_{TA} (% of I_{PN}) = $X + \left(\frac{TCG}{10000} \cdot (T_A - 25) + \frac{TCI_{OE}}{1000 \cdot I_P} \cdot 100 \cdot (T_A - 25)\right)$.

LEM reserves the right to carry out modifications on its transducers, in order to improve them, without prior notice

Electrical data HO 150-S-0100

At T_A = 25 °C, U_C = +5 V, R_L = 10 kΩ unless otherwise noted (see Min, Max, typ. definition paragraph in page 11).

Parameter	Symbol	Unit	Min	Typ	Max	Comment
Primary nominal rms current	I_{PN}	A		150		
Primary current, measuring range	I_{PM}	A	-375		375	@ U_C ≥ 4.6 V
Number of primary turns	N_P	-		1		See application information
Supply voltage [1]	U_C	V	4.5	5	5.5	
Current consumption	I_C	mA		19	25	
Reference voltage (output)	V_{ref}	V	2.48	2.5	2.52	Internal reference
Reference voltage (input)	V_{ref}	V	0.5		2.65	External reference
Output voltage range @ I_{PM}	V_{out} - V_{ref}	V	-2		2	Over operating temperature range
V_{ref} output resistance	R_{ref}	Ω	130	200	300	Series
V_{out} output resistance	R_{out}	Ω		2	5	Series
Allowed capacitive load	C_L	nF	0		6	
OCD output: On resistance	R_{on}	Ω	70	95	150	Open drain, active low Over operating temperature range
OCD output: Hold time	t_{hold}	ms	0.7	1	1.4	Additional time after threshold has released
EEPROM control	V_{out}	mV	0		50	V_{out} forced to GND when EEPROM in an error state [2]
Electrical offset voltage @ I_P = 0 A	V_{OE}	mV	-5		5	V_{out} - V_{ref} @ V_{ref} = 2.5 V
Electrical offset current Referred to primary	I_{OE}	A	-0.94		0.94	
Temperature coefficient of V_{ref}	TCV_{ref}	ppm/K	-170		170	-40 °C .. 105 °C
Temperature coefficient of V_{OE}	TCV_{OE}	mV/K	-0.075		0.075	-40 °C .. 105 °C
Offset drift referred to primary @ I_P = 0 A	TCI_{OE}	mA/K	-14.1		14.1	-40 °C .. 105 °C
Theoretical sensitivity	G_{th}	mV/A		5.333		800 mV@ I_{PN}
Sensitivity error @ I_{PN}	ε_G	%	-0.5		0.5	Factory adjustment (straight bus-bar)
Temperature coefficient of G	TCG	ppm/K	350		350	-40 °C .. 105 °C
Linearity error 0 .. I_{PN}	ε_L	% of I_{PN}	-0.5		0.5	
Linearity error 0 .. I_{PM}	ε_L	% of I_{PM}	-0.5		0.5	
Magnetic offset current (@10 × I_{PN}) referred to primary	I_{OM}	A	-0.92		0.92	One turn
Reaction time @ 10 % of I_{PN}	t_{ra}	µs			2.5	@ 50 A/µs
Response time @ 90 % of I_{PN}	t_r	µs			3.5	@ 50 A/µs
Frequency bandwidth (-3 dB)	BW	kHz		100		Small signals
Output rms voltage noise (spectral density) (100 Hz .. 100 kHz)	e_{no}	µV/√Hz			4.5	
Output voltage noise (DC .. 10 kHz) (DC .. 100 kHz) (DC .. 1 MHz)	V_{no}	mVpp			 2.9 6.2 12.3	
Over-current detect		A	2.64 x I_{PN}	2.93 x I_{PN}	3.22 x I_{PN}	Peak value ±10 %
Accuracy @ I_{PN}	X	% of I_{PN}	-1		1	
Accuracy @ I_{PN} @ T_A = +105 °C	X	% of I_{PN}	-4.6		4.6	See formula note [3]
Accuracy @ I_{PN} @ T_A = +85 °C	X	% of I_{PN}	-3.9		3.9	See formula note [3]

Notes: [1] 3.3 V SP version available

[2] EEPROM in an error state makes the transducer behave like a reverse current saturation. Use of the OCD may help to differentiate the two cases

[3] Accuracy @ X_{TA} (% of I_{PN}) $= X + \left(\frac{TCG}{10000} \cdot (T_A - 25) + \frac{TCI_{OE}}{1000 \cdot I_P} \cdot 100 \cdot (T_A - 25)\right)$.

LEM reserves the right to carry out modifications on its transducers, in order to improve them, without prior notice

Electrical data HO 200-S-0100

At T_A = 25 °C, U_C = +5 V, R_L = 10 kΩ unless otherwise noted (see Min, Max, typ. definition paragraph in page 11).

Parameter	Symbol	Unit	Min	Typ	Max	Comment
Primary nominal rms current	I_{PN}	A		200		
Primary current, measuring range	I_{PM}	A	-500		500	@ U_C ≥ 4.6 V
Number of primary turns	N_P	-		1		See application information
Supply voltage [1]	U_C	V	4.5	5	5.5	
Current consumption	I_C	mA		19	25	
Reference voltage (output)	V_{ref}	V	2.48	2.5	2.52	Internal reference
Reference voltage (input)	V_{ref}	V	0.5		2.65	External reference
Output voltage range @ I_{PM}	V_{out} - V_{ref}	V	-2		2	Over operating temperature range
V_{ref} output resistance	R_{ref}	Ω	130	200	300	Series
V_{out} output resistance	R_{out}	Ω		2	5	Series
Allowed capacitive load	C_L	nF	0		6	
OCD output: On resistance	R_{on}	Ω	70	95	150	Open drain, active low Over operating temperature range
OCD output: Hold time	t_{hold}	ms	0.7	1	1.4	Additional time after threshold has released
EEPROM control	V_{out}	mV	0		50	V_{out} forced to GND when EEPROM in an error state [2]
Electrical offset voltage @ I_P = 0 A	V_{OE}	mV	-5		5	V_{out} - V_{ref} @ V_{ref} = 2.5 V
Electrical offset current Referred to primary	I_{OE}	A	-1.25		1.25	
Temperature coefficient of V_{ref}	TCV_{ref}	ppm/K	-170		170	-40 °C .. 105 °C
Temperature coefficient of V_{OE}	TCV_{OE}	mV/K	-0.075		0.075	-40 °C .. 105 °C
Offset drift referred to primary @ I_P = 0 A	TCI_{OE}	mA/K	-18.75		18.75	-40 °C .. 105 °C
Theoretical sensitivity	G_{th}	mV/A		4		800 mV@ I_{PN}
Sensitivity error @ I_{PN}	ε_G	%	-0.5		0.5	Factory adjustment (straight bus-bar)
Temperature coefficient of G	TCG	ppm/K	350		350	-40 °C .. 105 °C
Linearity error 0 .. I_{PN}	ε_L	% of I_{PN}	-0.5		0.5	
Linearity error 0 .. I_{PM}	ε_L	% of I_{PM}	-0.5		0.5	
Magnetic offset current (@10 × I_{PN}) referred to primary	I_{OM}	A	-0.92		0.92	One turn
Reaction time @ 10 % of I_{PN}	t_{ra}	µs			2.5	@ 50 A/µs
Response time @ 90 % of I_{PN}	t_r	µs			3.5	@ 50 A/µs
Frequency bandwidth (-3 dB)	BW	kHz		100		Small signals
Output rms voltage noise (spectral density) (100 Hz .. 100 kHz)	e_{no}	µV/√Hz			3.7	
Output voltage noise (DC .. 10 kHz) (DC .. 100 kHz) (DC .. 1 MHz)	V_{no}	mVpp			 2.5 5 10	
Over-current detect		A	2.64 x I_{PN}	2.93 x I_{PN}	3.22 x I_{PN}	Peak value ±10 %
Accuracy @ I_{PN}	X	% of I_{PN}	-1		1	
Accuracy @ I_{PN} @ T_A = +105 °C	X	% of I_{PN}	-4.6		4.6	See formula note [3]
Accuracy @ I_{PN} @ T_A = +85 °C	X	% of I_{PN}	-3.9		3.9	See formula note [3]

Notes: [1] 3.3 V SP version available

[2] EEPROM in an error state makes the transducer behave like a reverse current saturation. Use of the OCD may help to differentiate the two cases

[3] Accuracy @ X_{TA} (% of I_{PN}) = $X + \left(\frac{TCG}{10000} \cdot (T_A - 25) + \frac{TCI_{OE}}{1000 \cdot I_P} \cdot 100 \cdot (T_A - 25)\right)$.

LEM reserves the right to carry out modifications on its transducers, in order to improve them, without prior notice

Electrical data HO 250-S-0100

At T_A = 25 °C, U_C = +5 V, R_L = 10 kΩ unless otherwise noted (see Min, Max, typ. definition paragraph in page 11).

Parameter	Symbol	Unit	Min	Typ	Max	Comment
Primary nominal rms current	I_{PN}	A		250		
Primary current, measuring range	I_{PM}	A	-625		625	@ U_C ≥ 4.6 V
Number of primary turns	N_P	-		1		See application information
Supply voltage [1]	U_C	V	4.5	5	5.5	
Current consumption	I_C	mA		19	25	
Reference voltage (output)	V_{ref}	V	2.48	2.5	2.52	Internal reference
Reference voltage (input)	V_{ref}	V	0.5		2.65	External reference
Output voltage range @ I_{PM}	V_{out} - V_{ref}	V	-2		2	Over operating temperature range
V_{ref} output resistance	R_{ref}	Ω	130	200	300	Series
V_{out} output resistance	R_{out}	Ω		2	5	Series
Allowed capacitive load	C_L	nF	0		6	
OCD output: On resistance	R_{on}	Ω	70	95	150	Open drain, active low Over operating temperature range
OCD output: Hold time	t_{hold}	ms	0.7	1	1.4	Additional time after threshold has released
EEPROM control	V_{out}	mV	0		50	V_{out} forced to GND when EEPROM in an error state [2]
Electrical offset voltage @ I_P = 0 A	V_{OE}	mV	-5		5	V_{out} - V_{ref} @ V_{ref} = 2.5 V
Electrical offset current Referred to primary	I_{OE}	A	-1.57		1.57	
Temperature coefficient of V_{ref}	TCV_{ref}	ppm/K	-170		170	-40 °C .. 105 °C
Temperature coefficient of V_{OE}	TCV_{OE}	mV/K	-0.075		0.075	-40 °C .. 105 °C
Offset drift referred to primary @ I_P = 0 A	TCI_{OE}	mA/K	-23.5		23.5	-40 °C .. 105 °C
Theoretical sensitivity	G_{th}	mV/A		3.2		800 mV@ I_{PN}
Sensitivity error @ I_{PN}	ε_G	%	-0.5		0.5	Factory adjustment (straight bus-bar)
Temperature coefficient of G	TCG	ppm/K	350		350	-40 °C .. 105 °C
Linearity error 0 .. I_{PN}	ε_L	% of I_{PN}	-0.5		0.5	
Linearity error 0 .. I_{PM}	ε_L	% of I_{PM}	-0.5		0.5	
Magnetic offset current (@10 × I_{PN}) referred to primary	I_{OM}	A	-0.92		0.92	One turn
Reaction time @ 10 % of I_{PN}	t_{ra}	µs			2.5	@ 50 A/µs
Response time @ 90 % of I_{PN}	t_r	µs			3.5	@ 50 A/µs
Frequency bandwidth (-3 dB)	BW	kHz		100		Small signals
Output rms voltage noise (spectral density) (100 Hz .. 100 kHz)	e_{no}	µV/√Hz			3.5	
Output voltage noise (DC .. 10 kHz) (DC .. 100 kHz) (DC .. 1 MHz)	V_{no}	mVpp			 2.3 4.2 8.6	
Over-current detect		A	2.64 x I_{PN}	2.93 x I_{PN}	3.22 x I_{PN}	Peak value ±10 %
Accuracy @ I_{PN}	X	% of I_{PN}	-1		1	
Accuracy @ I_{PN} @ T_A = +105 °C	X	% of I_{PN}	-4.6		4.6	See formula note [3]
Accuracy @ I_{PN} @ T_A = +85 °C	X	% of I_{PN}	-3.9		3.9	See formula note [3]

Notes: [1] 3.3 V SP version available

[2] EEPROM in an error state makes the transducer behave like a reverse current saturation. Use of the OCD may help to differentiate the two cases

[3] Accuracy @ X_{TA} (% of I_{PN}) = $X + \left(\frac{TCG}{10000} \cdot (T_A - 25) + \frac{TCI_{OE}}{1000 \cdot I_P} \cdot 100 \cdot (T_A - 25)\right)$.

LEM reserves the right to carry out modifications on its transducers, in order to improve them, without prior notice

HO-S series, measuring range versus external reference voltage

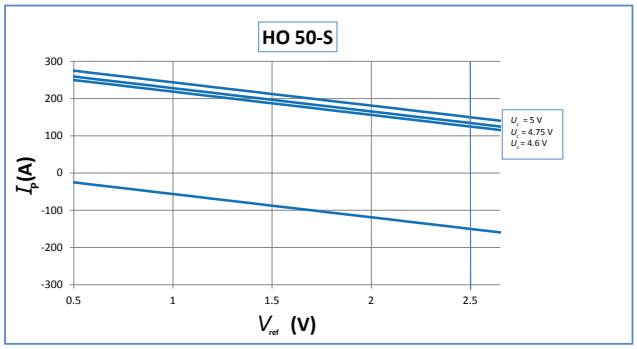

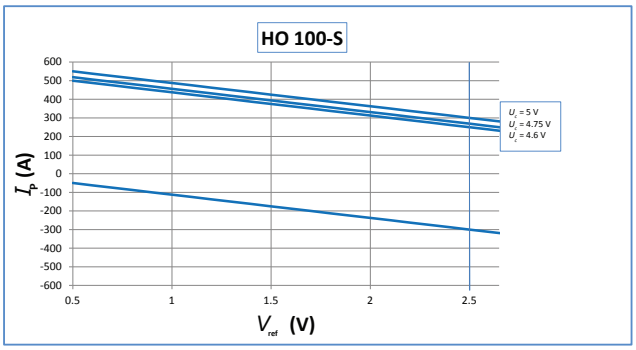

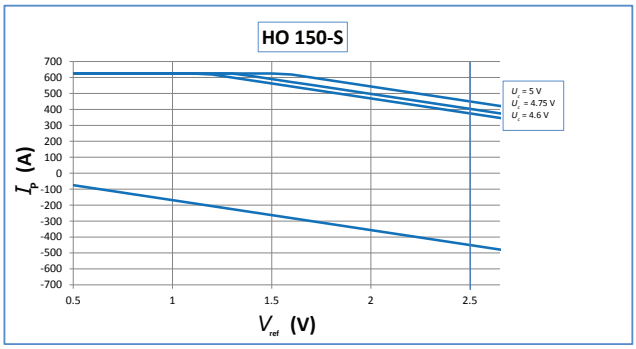

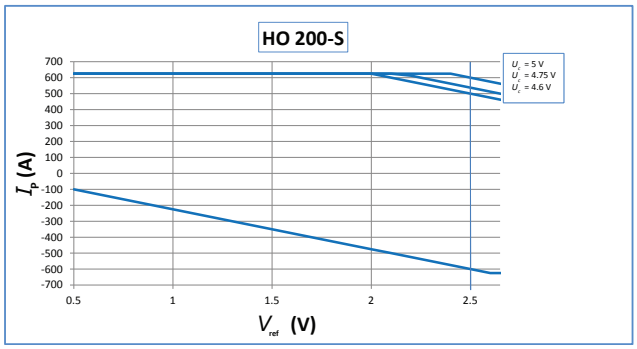

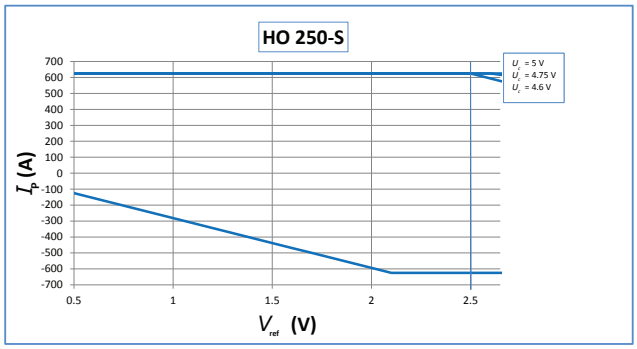

LEM reserves the right to carry out modifications on its transducers, in order to improve them, without prior notice

Maximum continuous DC current

For all ranges:

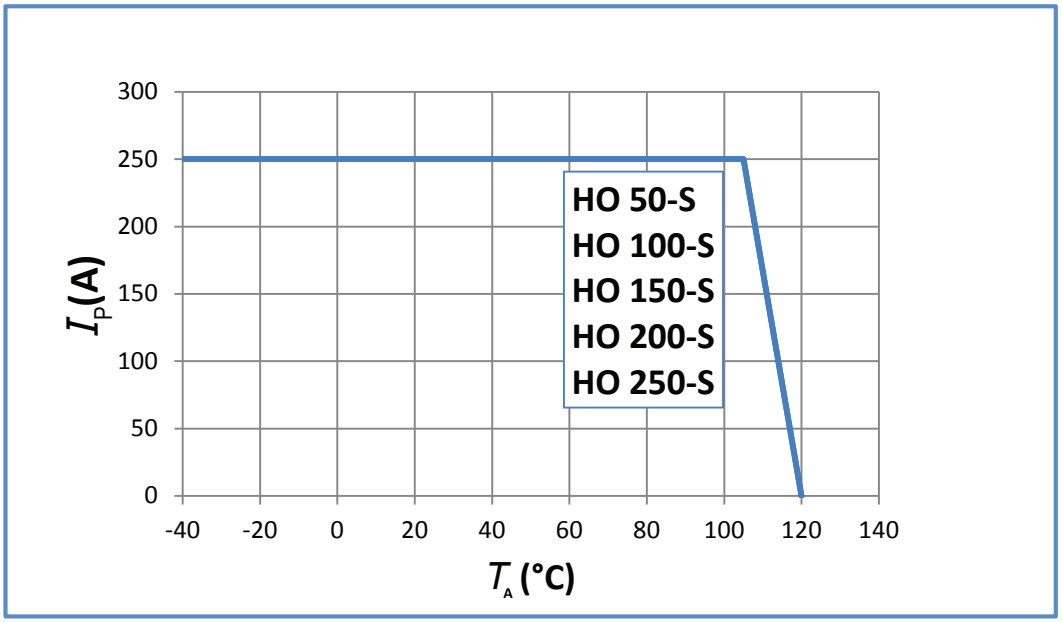

Important notice: whatever the usage and/or application, the transducer primary bar temperature shall not go above the maximum rating of 120 °C as stated in page 2 of this datasheet.

LEM reserves the right to carry out modifications on its transducers, in order to improve them, without prior notice

HO-S series: name and codification

HO family products may be ordered ***on request*** [1] with a dedicated setting of the parameters as described below (standards products are delivered with the setting 0100 according to the table).

HO-S-XXXX

Internal reference		***Response time***		***EEPROM Control***		***Over current detection*** ($\times I_{PN}$)	
0	2.5 V	0	4 µs	0	YES	0	2.93
1	1.65 V	1	3.5 µs	1	NO	1	3.59
2	1.5 V	2	6 µs			2	3.99
3	0.5 V					3	4.77
4	External V_{ref} only					4	5.19
						5	5.76
						6	1.68
						7	2.35

Standards products are:
- HO 50-S-0100
- HO 100-S-0100
- HO 150-S-0100
- HO 200-S-0100
- HO 250-S-0100

Application information

- HOxx-S series is designed to use a bus-bar or a cable [2] to carry the current through out the aperture with a maximum capacity of 15 x 8 mm
- Use of naked conductor is not recommended for panel mounting horizontal or vertical, insulation distance might not be respected between busbar and fixation screw head.

Insulation distance (nominal values):

	d_{Cp}	d_{Cl}
Between primary busbar and secondary pin	14.6 mm	-
Between primary busbar and core	-	11.34 mm
Between core and secondary terminal	-	1.18 mm

Notes: [1] For dedicated settings, minimum quantities apply, please contact your local LEM support.
[2] The maximum magnetic offset referred to primary is inversely proportional to the number of turns, thus is divided by 2 with 2 turns

LEM reserves the right to carry out modifications on its transducers, in order to improve them, without prior notice

Definition of typical, minimum and maximum values

Minimum and maximum values for specified limiting and safety conditions have to be understood as such as well as values shown in “typical” graphs.
On the other hand, measured values are part of a statistical distribution that can be specified by an interval with upper and lower limits and a probability for measured values to lie within this interval.

Unless otherwise stated (e.g. “100 % tested”), the LEM definition for such intervals designated with “min” and “max” is that the probability for values of samples to lie in this interval is 99.73 %.

For a normal (Gaussian) distribution, this corresponds to an interval between -3 sigma and +3 sigma. If “typical” values are not obviously mean or average values, those values are defined to delimit intervals with a probability of 68.27 %, corresponding to an interval between -sigma and +sigma for a normal distribution.
Typical, maximal and minimal values are determined during the initial characterization of a product.

Remark

Installation of the transducer must be done unless otherwise specified on the datasheet, according to LEM Transducer Generic Mounting Rules. Please refer to LEM document N°ANE120504 available on our Web site: **Products/Product Documentation**

Safety

This transducer must be used in limited-energy secondary circuits according to IEC 61010-1.

This transducer must be used in electric/electronic equipment with respect to applicable standards and safety requirements in accordance with the manufacturer’s operating instructions.

Caution, risk of electrical shock.
When operating the transducer, certain parts of the module can carry hazardous voltage (e.g. primary bus bar, power supply).
Ignoring this warning can lead to injury and/or cause serious damage.
This transducer is a build-in device, whose conducting parts must be inaccessible after installation.
A protective housing or additional shield could be used.
Main supply must be able to be disconnected.

LEM reserves the right to carry out modifications on its transducers, in order to improve them, without prior notice

Dimensions HO-S series (mm, general linear tolerance ±0.3 mm)

Mounting example: horizontal

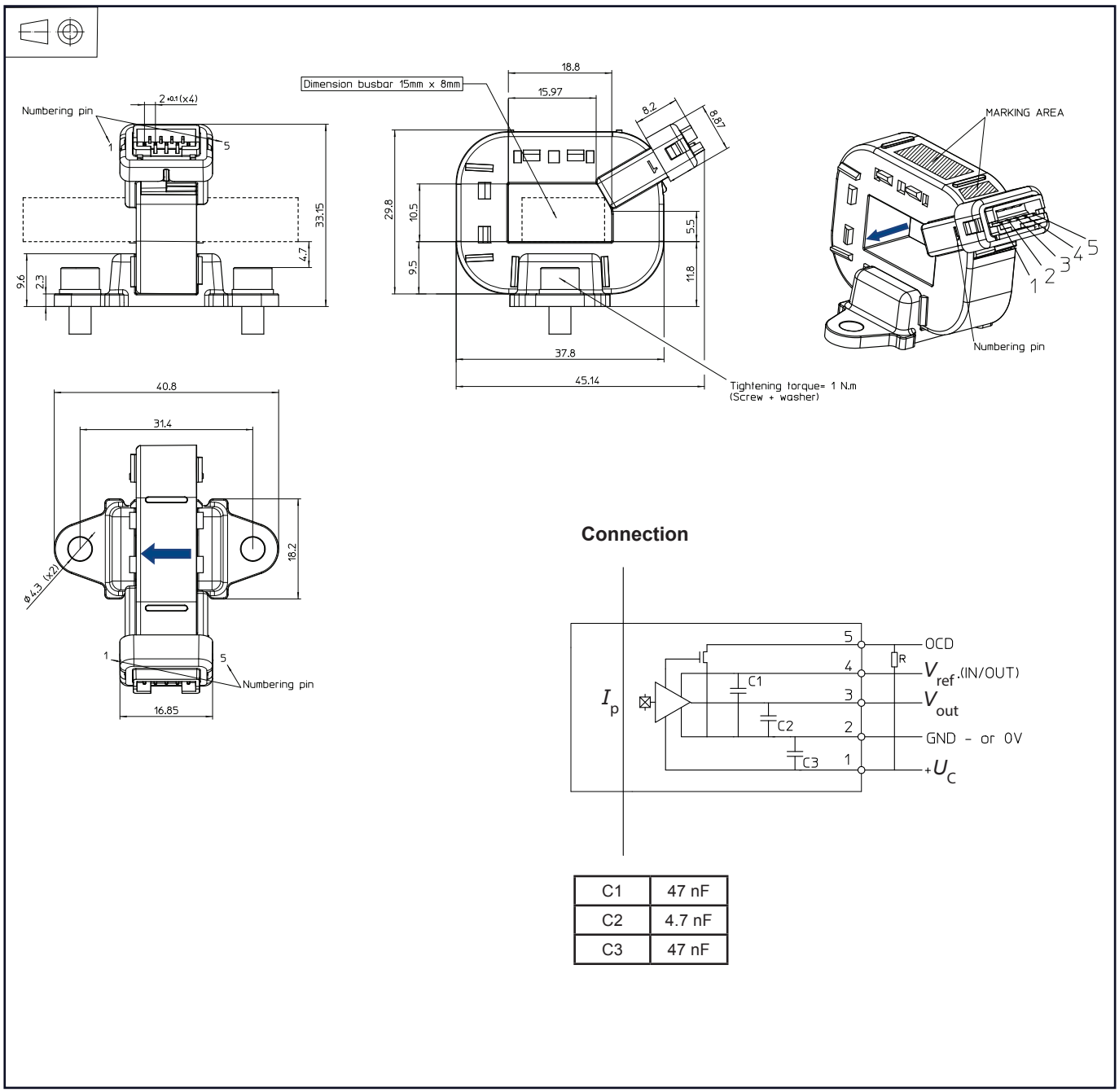

C1	47 nF
C2	4.7 nF
C3	47 nF

Remarks:

- V_{OUT} is positive with respect to V_{ref} when positive I_P flows in direction of the arrow shown on the drawing above.
- Connection system: equivalent to JST B5B-PH type.

LEM reserves the right to carry out modifications on its transducers, in order to improve them, without prior notice

Dimensions HO-S series (mm, general linear tolerance ± 0.3 mm)

Mounting example: vertical

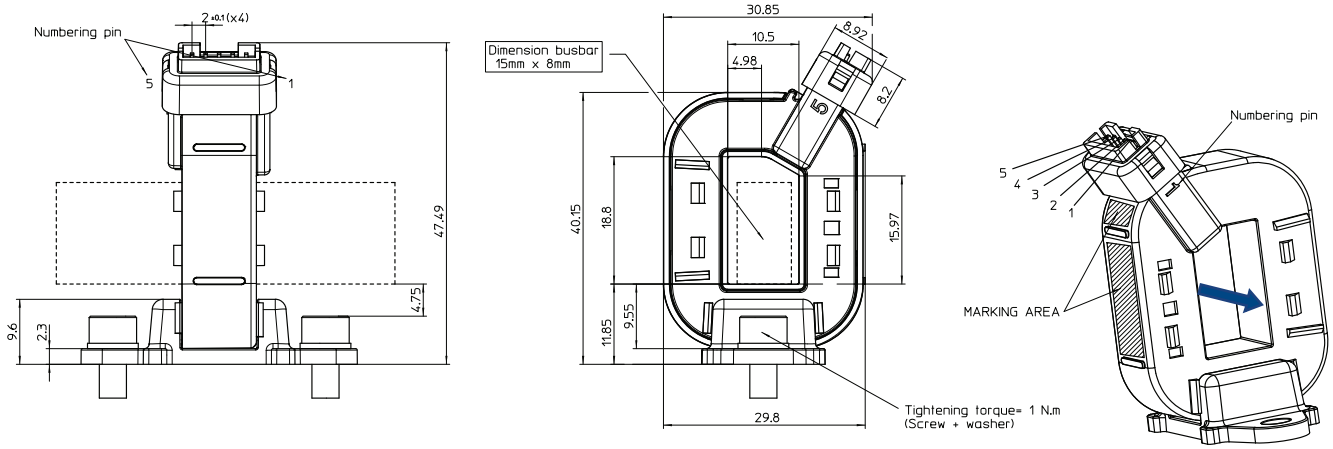

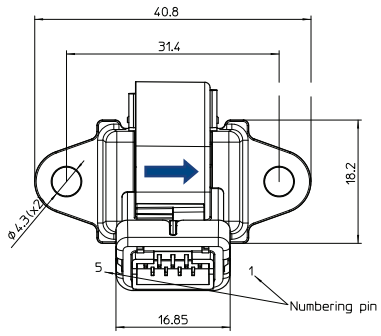

Connection

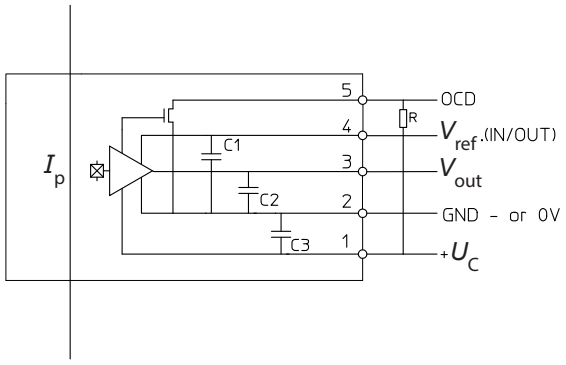

C1	47 nF
C2	4.7 nF
C3	47 nF

Remarks:

- V_{OUT} is positive with respect to V_{ref} when positive I_P flows in direction of the arrow shown on the drawing above.
- Connection system: equivalent to JST B5B-PH type.

LEM reserves the right to carry out modifications on its transducers, in order to improve them, without prior notice

Dimensions HO-S series (mm, general linear tolerance ± 0.3 mm)

Mounting example: busbar

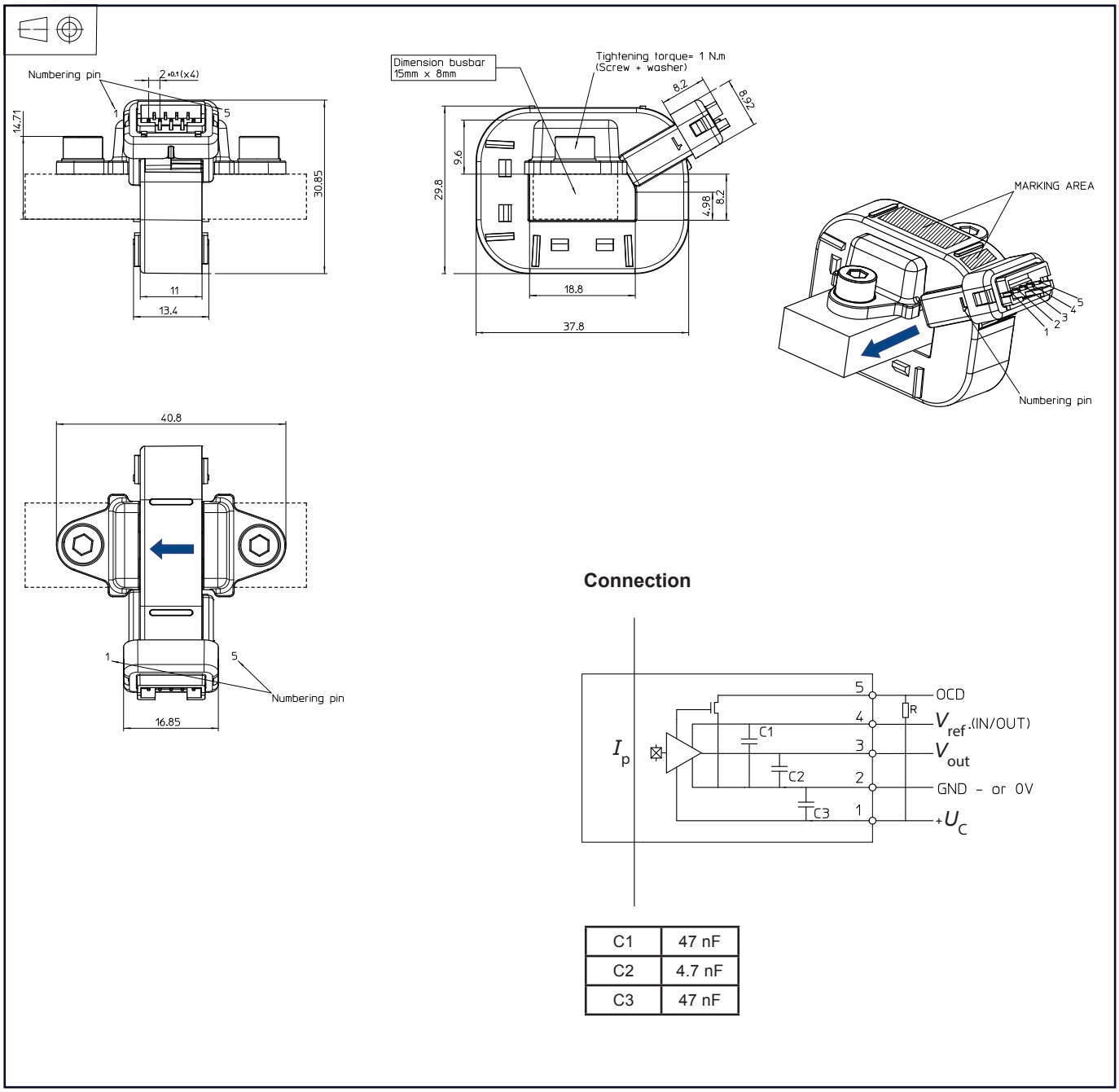

C1	47 nF
C2	4.7 nF
C3	47 nF

Remarks:

- V_{OUT} is positive with respect to V_{ref} when positive I_P flows in direction of the arrow shown on the drawing above.
- Connection system: equivalent to JST B5B-PH type.

LEM reserves the right to carry out modifications on its transducers, in order to improve them, without prior notice