SCRR1206S1 Series Current Sensing Resistor (Lead / Halogen Free)

Features / Applications :

- High power rating is up to 1W
- RoHS compliant
- Suitable for reflow soldering

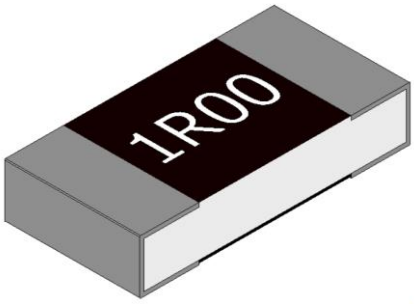

Electrical Specifications :

Characteristics	Feature
Power Rating*	1 W
Resistance Range	0.01Ω～1Ω
Temperature Coefficient of Resistance(ppm/℃)	±100
Resistance Tolerance	±1%(F), ±2%(G), ±5%(J)
Operation Temperature Range	-55℃ ～ +155℃

*Note :

For sensor operated at ambient temperature in excess of 70℃, the maximum load shall be derated in accordance with the following curve.

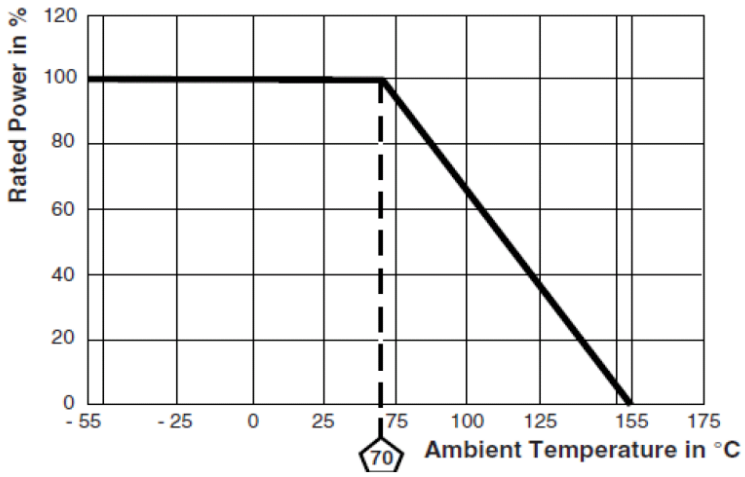

Outline Drawing :

Dimensions

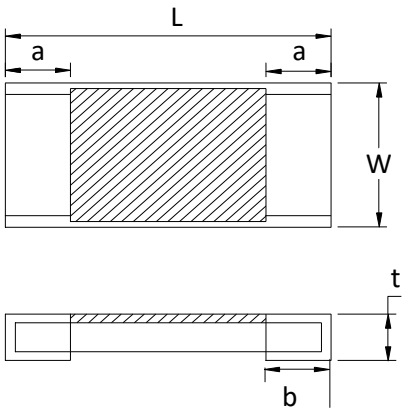

L	3.20 ± 0.20
W	1.60 ± 0.20
t	0.65 ± 0.20
a	0.70 ± 0.30
b	0.70 ± 0.30

Unit: mm

Type Designation :

S C R R	1206	S	1	-	□ □ □ □	□
(1)	(2)	(3)	(4)	-	(5)	(6)

Note :

(1) Series No.

(2) Size

(3) Terminal type : S = Short terminal

(4) Power Rating : 1 = 1W

(5) Resistance value:

The “R” shall be used as a decimal point, For example --

R010 = 0.01Ω;

(6) Tolerance (%)

F=±1%, G=±2%, J=±5%

Characteristics :

Electrical

Item	Specification and Requirement	Test Method (JIS 5201)
Temperature Coefficient of Resistance(ppm/℃)	As electrical specifications	Room temperature Room temperature +100℃
Short Time Overload	△R: ± 0.5% Without damage by flashover, spark, arcing, burning or breakdown	2.5 x rated power for 5 seconds
Insulation Resistance	Over 100 MΩ on Overcoat layer face up Over 1,000 MΩ on Substrate side face up	(1) Setup as figure 1 (2) Test voltage: 100VDC±15VDC (3) Test time: 60 + 10 / - 0 seconds
Voltage Proof	Resistance range: ± 1.0% Without damage by flashover, spark, arcing, burning or breakdown	(1) Setup as figure 1 (2) Test voltage: 400VAC(rms.) (3) Test time: 60 + 10 / - 0 seconds

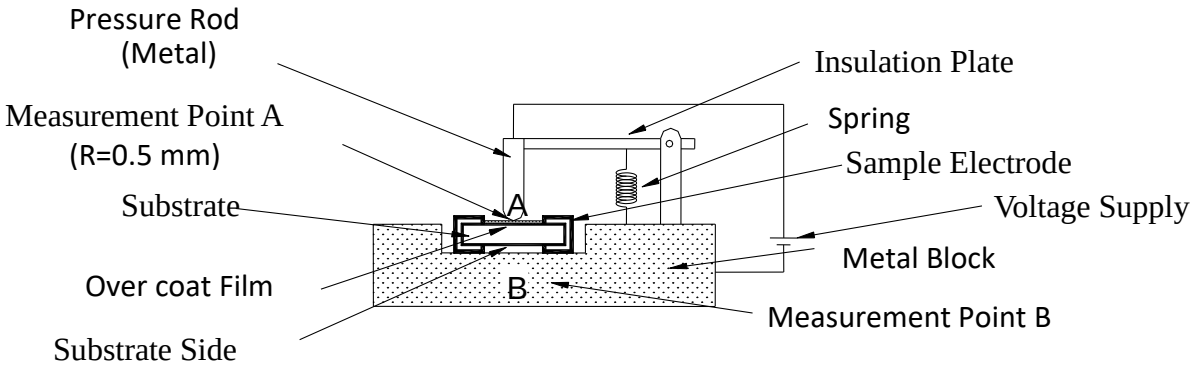

Figure 1 : Measurement Setup

Mechanical

Item	Specification and Requirement	Test Method (JIS 5201)
Solderability	The surface of terminal immersed shall be minimum of 95% covered with a new coating of solder	Solder bath: After immersing in flux, dip in 245 ± 5℃ molten solder bath for 2 ± 0.5 seconds

Item	Specification and Requirement	Test Method (JIS 5201)
Resistance to Solder Heat	△R: ± 1.0% Without distinct deformation in appearance	(1) Pre-heat: 100~110℃ for 30 seconds (2) Immersed at solder bath of 270 ± 5℃ for 10 ± 1 seconds
Bending Test	△R: ± 1.0% Without mechanical damage such as break	Bending value: 3 mm for 30 ± 1 seconds
Solvent Resistance	Without mechanical and distinct damage in appearance	(1) Solvent: Trichloroethane or Isopropyl alcohol (2) Immersed in solvent at room temperature for 300 seconds

Endurance

Item	Specification and Requirement	Test Method (JIS 5201)
Rapid Change of Temperature	△R: ± 1.0% Without distinct damage in appearance	-55 ~125℃ 100cycles, 15 min at each extreme condition
Moisture with Load	△R: ± 5.0% Without distinct damage in appearance	40 ± 2℃ with relative humidity 90% to 95%. D.C. rated voltage for 1.5 hours ON and 0.5 hours OFF. Cycle repeated 1,000 hours
Load Life	△R: ± 5.0% Without distinct damage in appearance	Rated voltage for 1.5 hours followed by a pause 0.5 hour at 70 ± 2℃. Cycle repeated 1000 hours
Low Temperature Store	△R: ± 5.0% Without distinct damage in appearance	Store temperature:-55 ± 3℃ for total 1,000 hours
High Temperature Store	△R: ± 5.0% Without distinct damage in appearance	Store temperature: 150 ± 2℃ for total 1,000 hours

Recommend Land Pattern Dimensions :

	W (mm)	L (mm)	D (mm)	t (μm)
1632	1.78	4.14	1.37	105

t: Copper foil minimum thickness of PCB

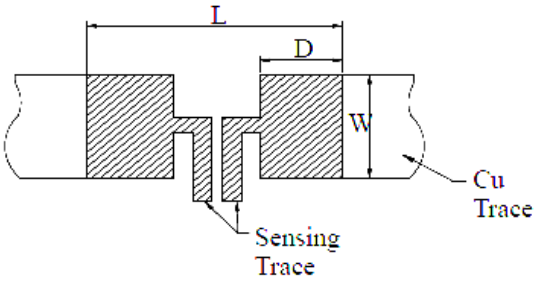

Notice: We recommend there is no circuit design between pads to avoid circuit short.

Packaging :

Tape packaging dimensions

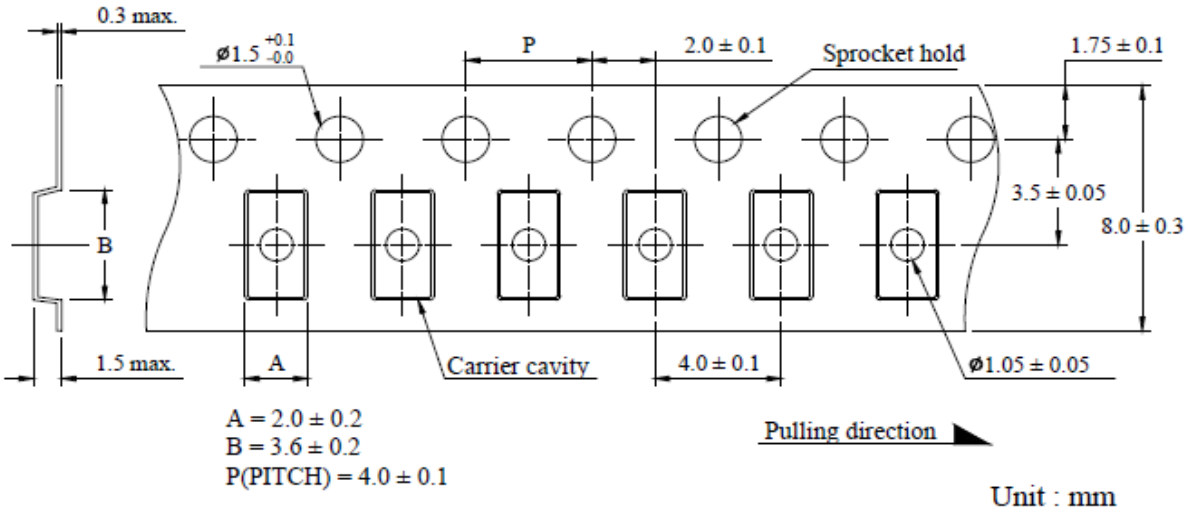

Remark: Leader tape length≧30 cm(150 Hollow carrier cavity)

Reel dimensions

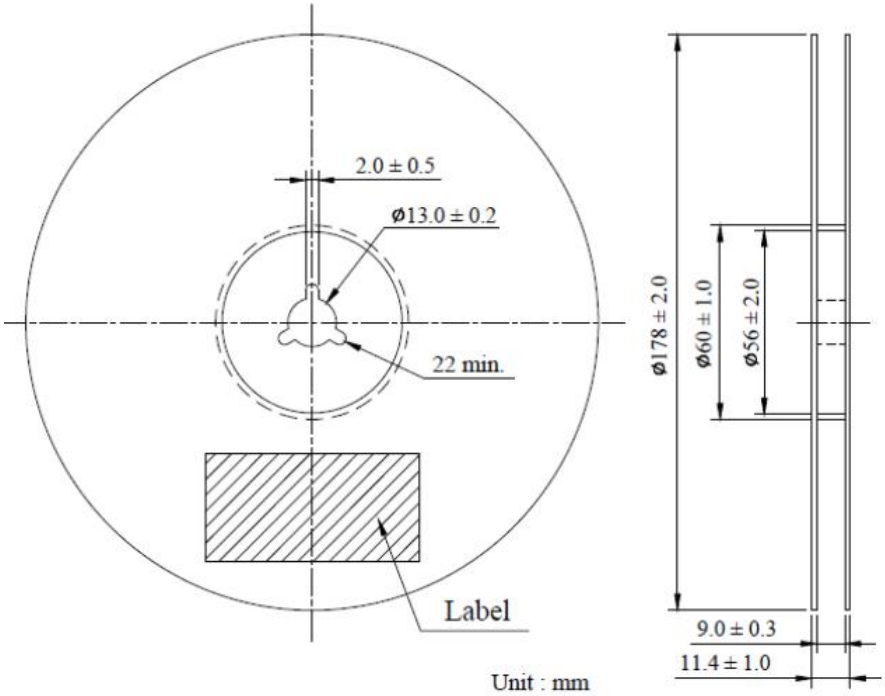

Numbers of Taping : 4,000 pieces /reel

The following items shall be marked on the reel.

(1) Type designation.

(2) Quantity

(3) Manufacturing date code

(4) Manufacturer's name

Peel force of top cover tape

The peel speed shall be about 300 mm/min. The peel force of top cover tape shall be between 0.1 to 0.7 N.

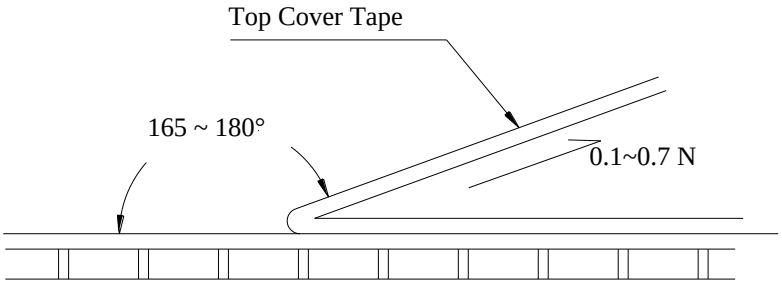

Care Note :

Care note for storage

(1) Chip resistor shall be stored in a room where temperature and humidity must be controlled. (temperature 5 to 35℃, humidity 45 to 85% RH) However, a humidity keep it low, as it is possible.

(2) Chip resistor shall be stored as direct sunshine doesn't hit on it.

(3) Chip resistor shall be stored with no moisture, dust, a material that will make solderability inferior, and a harmful gas (Chloridation hydrogen, sulfurous acid gas, and sulfuration hydrogen).

Care note for operating and handling

(1) It is necessary to protect the edge and protection coat of resistors from mechanical stress.

(2) Handle with care when printing circuit board (PCB) is divided or fixed on support body, because bending of printing circuit board (PCB) mounting will make mechanical stress for resistors.

(3) Resistors shall be used with in rated range shown in specification. Especially, if voltage more than specified value will be loaded to resistor, there is a case it will make damage for machine because of temperature rise depending on generating of heat, and increase resistance value or breaks.

(4) In case that resistor is loaded a rated voltage, it is necessary to confirms temperature of a resistor and to reduce a load power according to load reduction curve, because a temperature rise of a resistor depends on influence of heat from mounting density and neighboring element.

(5) Observe Limiting element voltage and maximum overload voltage specified in each specification

(6) If there is possibility that a large voltage (pulse voltage, shock voltage) charge to resistor, it is necessary that operating condition shall be set up before use.