19-3056; Rev 3; 1/05

EVALUATION KIT AVAILABLE

8-Port I/O Expander with LED Intensity Control, Interrupt, and Hot-Insertion Protection

MAX7315

General Description

The MAX7315 I²C-/SMBus-compatible serial interfaced peripheral provides microprocessors with 8 I/O ports. Each I/O port can be individually configured as either an open-drain current-sinking output rated at 50mA at 5.5V, or a logic input with transition detection. A ninth port can be used for transition detection interrupt or as a general-purpose output. The outputs are capable of directly driving LEDs, or providing logic outputs with external resistive pullup up to 5.5V.

PWM current drive is integrated with 8 bits of control. Four bits are global control and apply to all LED outputs to provide coarse adjustment of current from fully off to fully on in 14 intensity steps. Each output then has individual 4-bit control, which further divides the globally set current into 16 more steps. Alternatively, the current control can be configured as a single 8-bit control that sets all outputs at once.

The MAX7315 is pin and software compatible with the PCA9534 and PCA9554(A).

Each output has independent blink timing with two blink phases. All LEDs can be individually set to be on or off during either blink phase, or to ignore the blink control. The blink period is controlled by a register.

The MAX7315 supports hot insertion. All port pins, the $\overline{INT}$ output, SDA, SCL, and the slave address inputs ADO-2 remain high impedance in power-down (V+ = 0V) with up to 6V asserted upon them.

The MAX7315 is controlled through the 2-wire I²C/SMBus serial interface, and can be configured to one of 64 I²C addresses.

Applications

LCD Backlights	Keypad Backlights
LED Status Indication	RGB LED Drivers
Portable Equipment	Cellular Phones
Laptop Computers	

Typical Application Circuit appears at end of data sheet.

Features

- ♦ **400kbps, 2-Wire Serial Interface, 5.5V Tolerant**
- ♦ **2V to 3.6V Operation**
- ♦ **Overall 8-Bit PWM LED Intensity Control**
  Global 16-Step Intensity Control
  Plus Individual 16-Step Intensity Control
- ♦ **Automatic Two-Phase LED Blinking**
- ♦ **50mA Maximum Port Output Current**
- ♦ **Supports Hot Insertion**
- ♦ **Outputs Are 5.5V-Rated Open Drain**
- ♦ **Inputs Are Overvoltage Protected to 5.5V**
- ♦ **Transition Detection with Interrupt Output**
- ♦ **Low Standby Current (1.2µA typ; 3.3µA max)**
- ♦ **Tiny 3mm x 3mm, Thin QFN Package**
- ♦ **-40°C to +125°C Temperature Range**
- ♦ **All Ports Can Be Configured as Inputs or Outputs**

Ordering Information

PART	TEMP RANGE	PIN-PACKAGE	TOP MARK	PKG CODE
MAX7315ATE	-40°C to +125°C	16 Thin QFN 3mm x 3mm x 0.8mm	AAU	T1633-4
MAX7315AEE	-40°C to +125°C	16 QSOP	—	—
MAX7315AUE	-40°C to +125°C	16 TSSOP	—	—

Pin Configurations

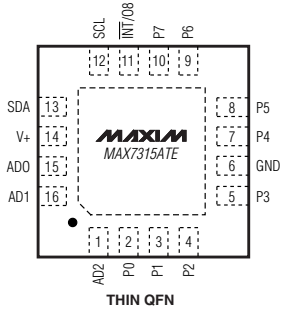

Pin Configurations continued at end of data sheet.

For pricing, delivery, and ordering information, please contact Maxim/Dallas Direct! at 1-888-629-4642, or visit Maxim's website at www.maxim-ic.com.

8-Port I/O Expander with LED Intensity Control, Interrupt, and Hot-Insertion Protection

ABSOLUTE MAXIMUM RATINGS

Voltage (with respect to GND)
V+ .....-0.3V to +4V
SCL, SDA, AD0, AD1, AD2, P0–P7 .....-0.3V to +6V
$\overline{INT}$/O8 .....-0.3V to +8V
DC Current on P0–P7, $\overline{INT}$/O8 .....55mA
DC Current on SDA.....10mA
Maximum GND Current 190mA
Continuous Power Dissipation (T_A = +70°C)
16-Pin TSSOP (derate 9.4mW/°C over +70°C) 754mW
16-Pin QSOP (derate 8.3mW/°C over +70°C).....666mW
16-Pin QFN (derate 14.7mW/°C over +70°C) 1176mW
Operating Temperature Range (T_{MIN} to T_{MAX})-40°C to +125°C
Junction Temperature .....+150°C
Storage Temperature Range .....-65°C to +150°C
Lead Temperature (soldering, 10s) .....+300°C

Stresses beyond those listed under "Absolute Maximum Ratings" may cause permanent damage to the device. These are stress ratings only, and functional operation of the device at these or any other conditions beyond those indicated in the operational sections of the specifications is not implied. Exposure to absolute maximum rating conditions for extended periods may affect device reliability.

ELECTRICAL CHARACTERISTICS

(Typical Operating Circuit, V+ = 2V to 3.6V, T_A = T_{MIN} to T_{MAX}, unless otherwise noted. Typical values are at V+ = 3.3V, T_A = +25°C.) (Note 1)

PARAMETER	SYMBOL	CONDITIONS		MIN	TYP	MAX	UNITS
Operating Supply Voltage	V+			2		3.6	V
Output Load External Supply Voltage	V_{EXT}			0		5.5	V
Standby Current (Interface Idle, PWM Disabled)	I_+	SCL and SDA at V+; other digital inputs at V+ or GND; PWM intensity control disabled	T_A = +25°C		1.2	2.3	µA
			T_A = -40°C to +85°C			2.6	
			T_A = T_{MIN} to T_{MAX}			3.3	
Supply Current (Interface Idle, PWM Enabled)	I_+	SCL and SDA at V+; other digital inputs at V+ or GND; PWM intensity control enabled	T_A = +25°C		7	12.1	µA
			T_A = -40°C to +85°C			13.5	
			T_A = T_{MIN} to T_{MAX}			14.4	
Supply Current (Interface Running, PWM Disabled)	I_+	f_{SCL} = 400kHz; other digital inputs at V+ or GND; PWM intensity control disabled	T_A = +25°C		40	76	µA
			T_A = -40°C to +85°C			78	
			T_A = T_{MIN} to T_{MAX}			80	
Supply Current (Interface Running, PWM Enabled)	I_+	f_{SCL} = 400kHz; other digital inputs at V+ or GND; PWM intensity control enabled	T_A = +25°C		51	110	µA
			T_A = -40°C to +85°C			117	
			T_A = T_{MIN} to T_{MAX}			122	
Input High Voltage SDA, SCL, AD0, AD1, AD2, P0–P7	V_{IH}			0.7 × V+			V
Input Low Voltage SDA, SCL, AD0, AD1, AD2, P0–P7	V_{IL}					0.3 × V+	V
Input Leakage Current SDA, SCL, AD0, AD1, AD2, P0–P7	I_{IH}, I_{IL}	Input = GND or V+		-0.2		+0.2	µA
Input Capacitance SDA, SCL, AD0, AD1, AD2, P0–P7					8		pF

ELECTRICAL CHARACTERISTICS (continued)

(Typical Operating Circuit, V+ = 2V to 3.6V, T_A = T_{MIN} to T_{MAX}, unless otherwise noted. Typical values are at V+ = 3.3V, T_A= + 25°C.) (Note 1)

PARAMETER	SYMBOL	CONDITIONS		MIN	TYP	MAX	UNITS
Output Low Voltage P0–P7, $\overline{INT}$/O8	V_{OL}	V+ = 2V, I_{SINK} = 20mA	T_A = +25°C		0.15	0.25	V
			T_A = -40°C to +85°C			0.29	
			T_A = T_{MIN} to T_{MAX}			0.31	
		V+ = 2.5V, I_{SINK} = 20mA	T_A = +25°C		0.13	0.22	
			T_A = -40°C to +85°C			0.25	
			T_A = T_{MIN} to T_{MAX}			0.27	
		V+ = 3.3V, I_{SINK} = 20mA	T_A = +25°C		0.12	0.22	
			T_A = -40°C to +85°C			0.23	
			T_A = T_{MIN} to T_{MAX}			0.25	
Output Low-Voltage SDA	V_{OLSDA}	I_{SINK} = 6mA				0.4	V
PWM Clock Frequency	f_{PWM}				32		kHz

TIMING CHARACTERISTICS

(Typical Operating Circuit, V+ = 2V to 3.6V, T_A = T_{MIN} to T_{MAX}, unless otherwise noted. Typical values are at V+ = 3.3V, T_A = +25°C.) (Note 1)

PARAMETER	SYMBOL	CONDITIONS	MIN	TYP	MAX	UNITS
Serial Clock Frequency	f_{SCL}				400	kHz
Bus Free Time Between a STOP and a START Condition	t_{BUF}		1.3			µs
Hold Time, Repeated START Condition	$t_{HD, STA}$		0.6			µs
Repeated START Condition Setup Time	$t_{SU, STA}$		0.6			µs
STOP Condition Setup Time	$t_{SU, STO}$		0.6			µs
Data Hold Time	$t_{HD, DAT}$	(Note 2)			0.9	µs
Data Setup Time	$t_{SU, DAT}$		180			ns
SCL Clock Low Period	t_{LOW}		1.3			µs
SCL Clock High Period	t_{HIGH}		0.7			µs
Rise Time of Both SDA and SCL Signals, Receiving	t_R	(Notes 3, 4)		200 + 0.1C_b	300	ns
Fall Time of Both SDA and SCL Signals, Receiving	t_F	(Notes 3, 4)		200 + 0.1C_b	300	ns
Fall Time of SDA Transmitting	$t_{F.TX}$	(Notes 3, 5)		200 + 0.1C_b	250	ns
Pulse Width of Spike Suppressed	t_{SP}	(Note 6)		50		ns
Capacitive Load for Each Bus Line	C_b	(Note 3)			400	pF

8-Port I/O Expander with LED Intensity Control, Interrupt, and Hot-Insertion Protection

TIMING CHARACTERISTICS (continued)

(Typical Operating Circuit, V+ = 2V to 3.6V, T_A = T_{MIN} to T_{MAX}, unless otherwise noted. Typical values are at V+ = 3.3V, T_A = +25°C.) (Note 1)

PARAMETER	SYMBOL	CONDITIONS	MIN	TYP	MAX	UNITS
Interrupt Valid	t_{IV}	Figure 10			6.5	µs
Interrupt Reset	t_{IR}	Figure 10			1	µs
Output Data Valid	t_{DV}	Figure 10			5	µs
Input Data Setup Time	t_{DS}	Figure 10	100			ns
Input Data Hold Time	t_{DH}	Figure 10	1			µs

Note 1: All parameters tested at T_A = +25°C. Specifications over temperature are guaranteed by design.
Note 2: A master device must provide a hold time of at least 300ns for the SDA signal (referred to V_{IL} of the SCL signal) to bridge the undefined region of SCL's falling edge.
Note 3: Guaranteed by design.
Note 4: C_b = total capacitance of one bus line in pF. t_R and t_F measured between 0.3 x V_{DD} and 0.7 x V_{DD}.
Note 5: I_{SINK} ≤ 6mA. C_b = total capacitance of one bus line in pF. t_R and t_F measured between 0.3 x V_{DD} and 0.7 x V_{DD}.
Note 6: Input filters on the SDA and SCL inputs suppress noise spikes less than 50ns.

Typical Operating Characteristics

(T_A = +25°C, unless otherwise noted.)

STANDBY CURRENT vs. TEMPERATURE

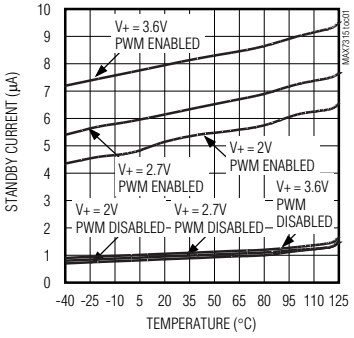

SUPPLY CURRENT vs. TEMPERATURE (PWM DISABLED; f_{SCL} = 400kHz)

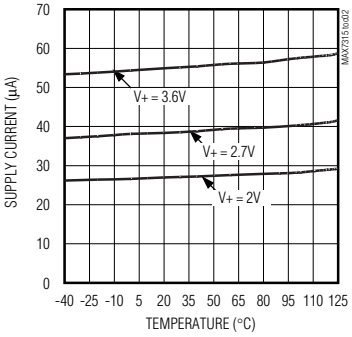

SUPPLY CURRENT vs. TEMPERATURE (PWM ENABLED; f_{SCL} = 400kHz)

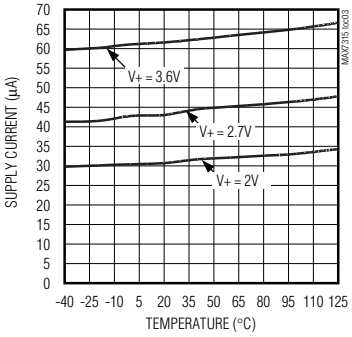

Typical Operating Characteristics (continued)

(T_A = +25°C, unless otherwise noted.)

PORT OUTPUT LOW VOLTAGE WITH 50mA LOAD CURRENT vs. TEMPERATURE

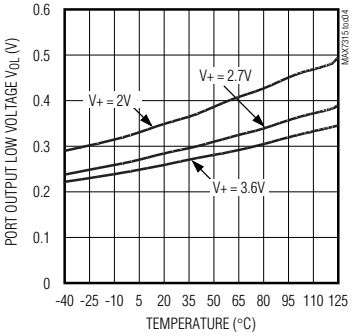

PORT OUTPUT LOW VOLTAGE WITH 20mA LOAD CURRENT vs. TEMPERATURE

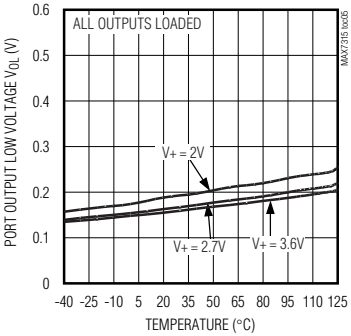

PWM CLOCK FREQUENCY vs. TEMPERATURE

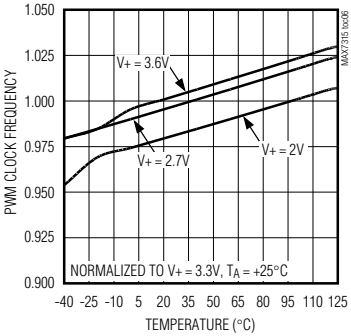

SCOPE SHOT OF 2 OUTPUT PORTS

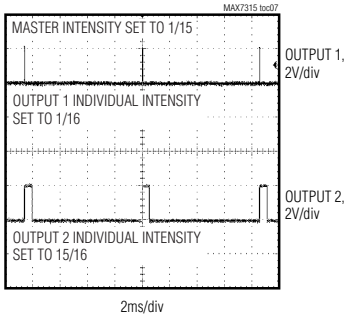

SCOPE SHOT OF 2 OUTPUT PORTS

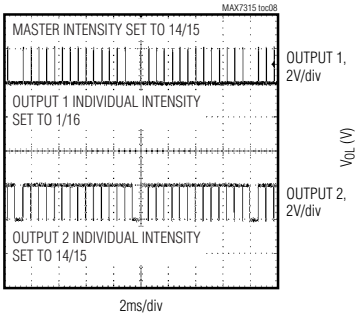

SINK CURRENT vs. V_{OL}

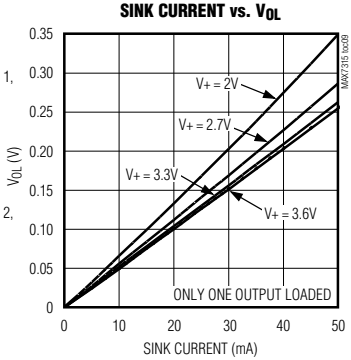

8-Port I/O Expander with LED Intensity Control, Interrupt, and Hot-Insertion Protection

Pin Description

PIN		NAME	FUNCTION
QSOP/TSSOP	QFN		
1, 2, 3	15, 16, 1	AD0, AD1, AD2	Address Inputs. Sets device slave address. Connect to either GND, V+, SCL, or SDA to give 64 logic combinations. See Table 1.
4–7, 9–12	2–5, 7–10	P0–P7	Input/Output Ports. P0–P7 are open-drain I/Os rated at 5.5V, 50mA.
8	6	GND	Ground. Do not sink more than 190mA into the GND pin.
13	11	$\overline{INT}$/O8	Output Port. Open-drain output rated at 7.0V, 50mA. Configurable as interrupt output or general-purpose output.
14	12	SCL	I²C-Compatible Serial Clock Input
15	13	SDA	I²C-Compatible Serial Data I/O
16	14	V+	Positive Supply Voltage. Bypass V+ to GND with a 0.047µF ceramic capacitor
—	PAD	Exposed pad	Exposed Pad on Package Underside. Connect to GND.

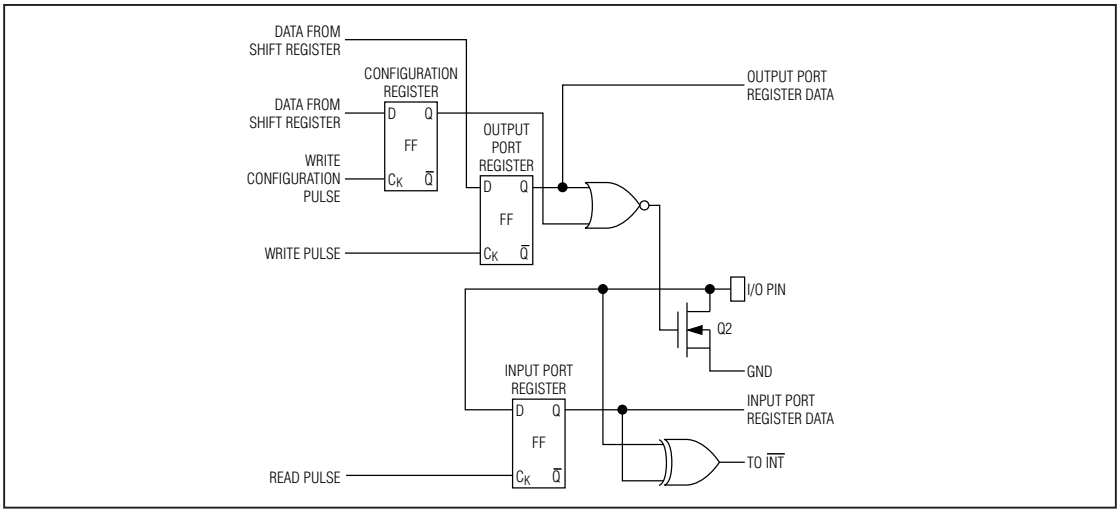

Figure 1. Simplified Schematic of I/O Ports

Functional Overview

The MAX7315 is a general-purpose input/output (GPIO) peripheral that provides eight I/O ports, P0–P7, controlled through an I²C-compatible serial interface. A 9th output-only port, $\overline{INT}$/O8, can be configured as an interrupt output or as a general-purpose output port. All output ports sink loads up to 50mA connected to external supplies up to 5.5V, independent of the MAX7315's supply voltage. The MAX7315 is rated for a ground current of 190mA, allowing all nine outputs to sink 20mA at the same time. Figure 1 shows the output structure of the MAX7315. The ports default to inputs on power-up.

Port Inputs and Transition Detection

An input ports register reflects the incoming logic levels of the port pins, regardless of whether the pin is defined as an input or an output. Reading the input

ports register latches the current-input logic level of the affected eight ports. Transition detection allows all ports configured as inputs to be monitored for changes in their logic status. The action of reading the input ports register samples the corresponding 8 port bits' input condition. This sample is continuously compared with the actual input conditions. A detected change in input condition causes the $\overline{INT}$/O8 interrupt output to go low, if configured as an interrupt output. The interrupt is cleared either automatically if the changed input returns to its original state, or when the input ports register is read.

The $\overline{INT}$/O8 pin can be configured as either an interrupt output or as a 9th output port with the same static or blink controls as the other eight ports (Table 4).

Port Output Control and LED Blinking

The blink phase 0 register sets the output logic levels of the eight ports P0–P7 (Table 8). This register controls the port outputs if the blink function is disabled. A duplicate register, the blink phase 1 register, is also used if the blink function is enabled (Table 9). In blink mode, the port outputs can be flipped between using the blink phase 0 register and the blink phase 1 register using software control (the blink flip flag in the configuration register) (Table 4).

PWM Intensity Control

The MAX7315 includes an internal oscillator, nominally 32kHz, to generate PWM timing for LED intensity control. PWM intensity control can be enabled on an output-by-output basis, allowing the MAX7315 to provide any mix of PWM LED drives and glitch-free logic outputs (Table 10). PWM can be disabled entirely, in which case all output ports are static and the MAX7315 operating current is lowest because the internal oscillator is turned off.

PWM intensity control uses a 4-bit master control and 4 bits of individual control per output (Tables 13, 14). The 4-bit master control provides 16 levels of overall intensity control, which applies to all PWM-enabled output ports. The master control sets the maximum pulse width from 1/15 to 15/15 of the PWM time period. The individual settings comprise a 4-bit number further reducing the duty cycle to be from 1/16 to 15/16 of the time window set by the master control.

For applications requiring the same PWM setting for all output ports, a single global PWM control can be used instead of all the individual controls to simplify the control software and provide 240 steps of intensity control (Tables 10 and 13).

Standby Mode

When the serial interface is idle and the PWM intensity control is unused, the MAX7315 automatically enters standby mode. If the PWM intensity control is used, the operating current is slightly higher because the internal PWM oscillator is running. When the serial interface is active, the operating current also increases because the MAX7315, like all I^2C slaves, has to monitor every transmission.

Serial Interface

Serial Addressing

The MAX7315 operates as a slave that sends and receives data through an I^2C-compatible 2-wire interface. The interface uses a serial data line (SDA) and a serial clock line (SCL) to achieve bidirectional communication between master(s) and slave(s). A master (typically a microcontroller) initiates all data transfers to and from the MAX7315 and generates the SCL clock that synchronizes the data transfer (Figure 2).

The MAX7315 SDA line operates as both an input and an open-drain output. A pullup resistor, typically 4.7kΩ, is required on SDA. The MAX7315 SCL line operates

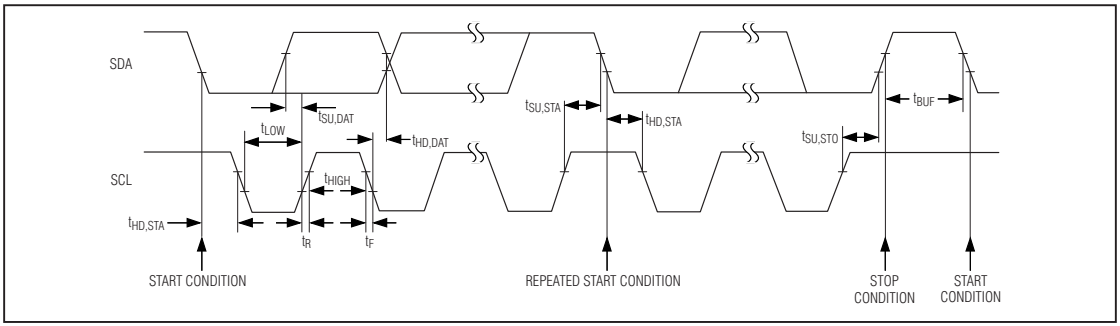

Figure 2. 2-Wire Serial Interface Timing Details

8-Port I/O Expander with LED Intensity Control, Interrupt, and Hot-Insertion Protection

only as an input. A pullup resistor, typically 4.7kΩ, is required on SCL if there are multiple masters on the 2-wire interface, or if the master in a single-master system has an open-drain SCL output.

Each transmission consists of a START condition (Figure 3) sent by a master, followed by the MAX7315 7-bit slave address plus R/$\overline{W}$ bit, a register address byte, one or more data bytes, and finally a STOP condition (Figure 3).

Start and Stop Conditions

Both SCL and SDA remain high when the interface is not busy. A master signals the beginning of a transmission with a START (S) condition by transitioning SDA from high to low while SCL is high. When the master has finished communicating with the slave, it issues a STOP (P) condition by transitioning SDA from low to high while SCL is high. The bus is then free for another transmission (Figure 3).

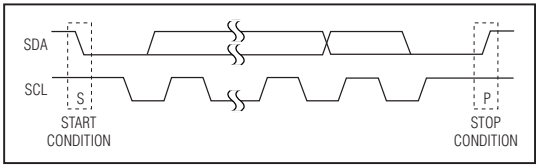

Figure 3. Start and Stop Conditions

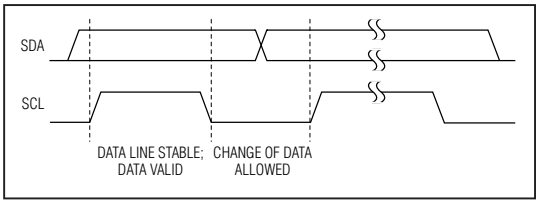

Figure 4. Bit Transfer

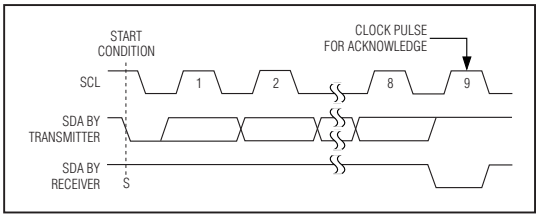

Figure 5. Acknowledge

Bit Transfer

One data bit is transferred during each clock pulse. The data on SDA must remain stable while SCL is high (Figure 4).

Acknowledge

The acknowledge bit is a clocked 9th bit that the recipient uses to handshake receipt of each byte of data (Figure 5). Thus, each byte transferred effectively requires 9 bits. The master generates the 9th clock pulse, and the recipient pulls down SDA during the acknowledge clock pulse so the SDA line is stable low during the high period of the clock pulse. When the master is transmitting to the MAX7315, the device generates the acknowledge bit because the MAX7315 is the recipient. When the MAX7315 is transmitting to the master, the master generates the acknowledge bit because the master is the recipient.

Slave Address

The MAX7315 has a 7-bit long slave address (Figure 6). The eighth bit following the 7-bit slave address is the R/$\overline{W}$ bit. The R/$\overline{W}$ bit is low for a write command, high for a read command.

The slave address bits A6 through A0 are selected by the address inputs AD0, AD1, and AD2. These pins can be connected to GND, V+, SDA, or SCL. The MAX7315 has 64 possible slave addresses (Table 1) and, therefore, a maximum of 64 MAX7315 devices can be controlled independently from the same interface.

Message Format for Writing the MAX7315

A write to the MAX7315 comprises the transmission of the MAX7315's slave address with the R/$\overline{W}$ bit set to zero, followed by at least 1 byte of information. The first byte of information is the command byte. The command byte determines which register of the MAX7315 is to be written to by the next byte, if received (Table 2). If a STOP condition is detected after the command byte is received, then the MAX7315 takes no further action beyond storing the command byte.

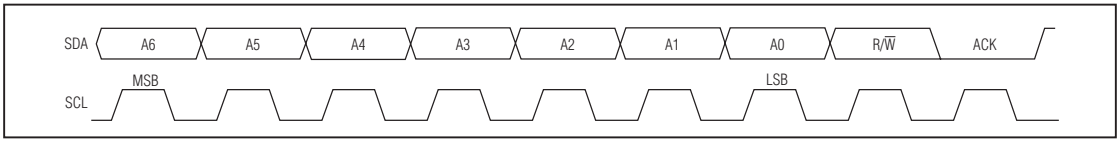

Figure 6. Slave Address

Table 1. MAX7315 I²C Slave Address Map

PIN AD2	PIN AD1	PIN AD0	DEVICE ADDRESS						
			A6	A5	A4	A3	A2	A1	A0
GND	SCL	GND	0	0	1	0	0	0	0
GND	SCL	V+	0	0	1	0	0	0	1
GND	SDA	GND	0	0	1	0	0	1	0
GND	SDA	V+	0	0	1	0	0	1	1
V+	SCL	GND	0	0	1	0	1	0	0
V+	SCL	V+	0	0	1	0	1	0	1
V+	SDA	GND	0	0	1	0	1	1	0
V+	SDA	V+	0	0	1	0	1	1	1
GND	SCL	SCL	0	0	1	1	0	0	0
GND	SCL	SDA	0	0	1	1	0	0	1
GND	SDA	SCL	0	0	1	1	0	1	0
GND	SDA	SDA	0	0	1	1	0	1	1
V+	SCL	SCL	0	0	1	1	1	0	0
V+	SCL	SDA	0	0	1	1	1	0	1
V+	SDA	SCL	0	0	1	1	1	1	0
V+	SDA	SDA	0	0	1	1	1	1	1
GND	GND	GND	0	1	0	0	0	0	0
GND	GND	V+	0	1	0	0	0	0	1
GND	V+	GND	0	1	0	0	0	1	0
GND	V+	V+	0	1	0	0	0	1	1
V+	GND	GND	0	1	0	0	1	0	0
V+	GND	V+	0	1	0	0	1	0	1
V+	V+	GND	0	1	0	0	1	1	0
V+	V+	V+	0	1	0	0	1	1	1
GND	GND	SCL	0	1	0	1	0	0	0
GND	GND	SDA	0	1	0	1	0	0	1
GND	V+	SCL	0	1	0	1	0	1	0
GND	V+	SDA	0	1	0	1	0	1	1
V+	GND	SCL	0	1	0	1	1	0	0
V+	GND	SDA	0	1	0	1	1	0	1
V+	V+	SCL	0	1	0	1	1	1	0
V+	V+	SDA	0	1	0	1	1	1	1

8-Port I/O Expander with LED Intensity Control, Interrupt, and Hot-Insertion Protection

Table 1. MAX7315 I²C Slave Address Map (continued)

PIN AD2	PIN AD1	PIN AD0	DEVICE ADDRESS						
			A6	A5	A4	A3	A2	A1	A0
SCL	SCL	GND	1	0	1	0	0	0	0
SCL	SCL	V+	1	0	1	0	0	0	1
SCL	SDA	GND	1	0	1	0	0	1	0
SCL	SDA	V+	1	0	1	0	0	1	1
SDA	SCL	GND	1	0	1	0	1	0	0
SDA	SCL	V+	1	0	1	0	1	0	1
SDA	SDA	GND	1	0	1	0	1	1	0
SDA	SDA	V+	1	0	1	0	1	1	1
SCL	SCL	SCL	1	0	1	1	0	0	0
SCL	SCL	SDA	1	0	1	1	0	0	1
SCL	SDA	SCL	1	0	1	1	0	1	0
SCL	SDA	SDA	1	0	1	1	0	1	1
SDA	SCL	SCL	1	0	1	1	1	0	0
SDA	SCL	SDA	1	0	1	1	1	0	1
SDA	SDA	SCL	1	0	1	1	1	1	0
SDA	SDA	SDA	1	0	1	1	1	1	1
SCL	GND	GND	1	1	0	0	0	0	0
SCL	GND	V+	1	1	0	0	0	0	1
SCL	V+	GND	1	1	0	0	0	1	0
SCL	V+	V+	1	1	0	0	0	1	1
SDA	GND	GND	1	1	0	0	1	0	0
SDA	GND	V+	1	1	0	0	1	0	1
SDA	V+	GND	1	1	0	0	1	1	0
SDA	V+	V+	1	1	0	0	1	1	1
SCL	GND	SCL	1	1	0	1	0	0	0
SCL	GND	SDA	1	1	0	1	0	0	1
SCL	V+	SCL	1	1	0	1	0	1	0
SCL	V+	SDA	1	1	0	1	0	1	1
SDA	GND	SCL	1	1	0	1	1	0	0
SDA	GND	SDA	1	1	0	1	1	0	1
SDA	V+	SCL	1	1	0	1	1	1	0
SDA	V+	SDA	1	1	0	1	1	1	1

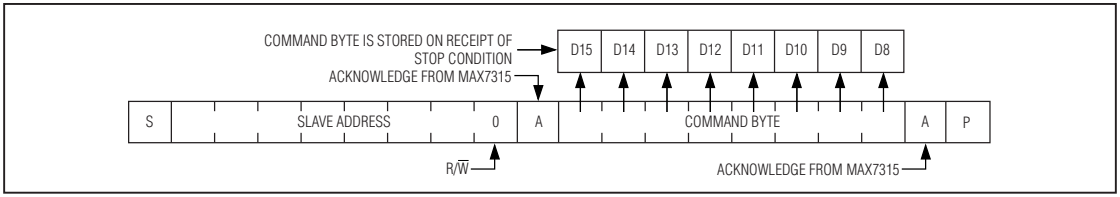

Figure 7. Command Byte Received

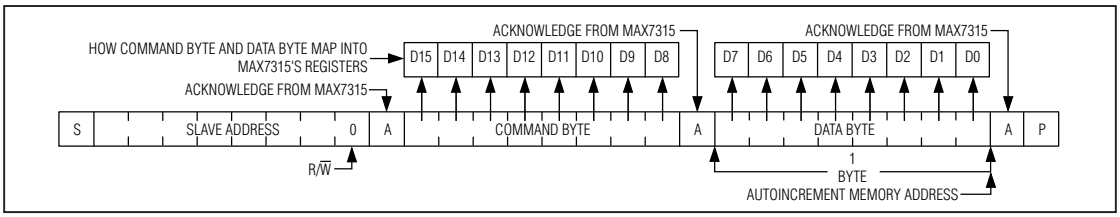

Figure 8. Command and Single Data Byte Received

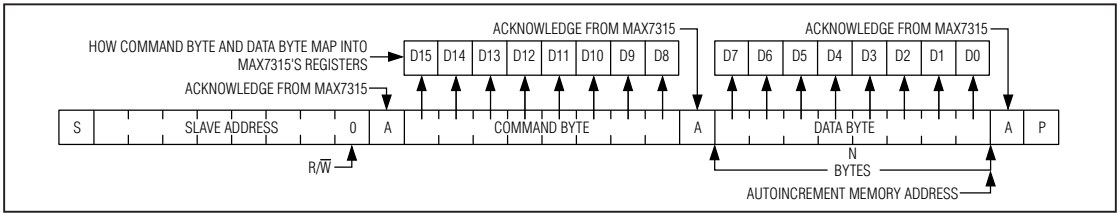

Figure 9. n Data Bytes Received

Any bytes received after the command byte are data bytes. The first data byte goes into the internal register of the MAX7315 selected by the command byte (Figure 8). If multiple data bytes are transmitted before a STOP condition is detected, these bytes are generally stored in subsequent MAX7315 internal registers because the command byte address autoincrements (Table 2). A diagram of a write to the output ports registers (blink phase 0 register or blink phase 1 register) is given in Figure 10.

Message Format for Reading

The MAX7315 is read using the MAX7315's internally stored command byte as an address pointer the same way the stored command byte is used as an address pointer for a write. The pointer autoincrements after each data byte is read using the same rules as for a write (Table 2). Thus, a read is initiated by first configuring the MAX7315's command byte by performing a write (Figure 7). The master can now read n consecutive bytes from the MAX7315 with the first data byte being read from the register addressed by the initialized command byte. When performing read-after-write verification, remember to reset the command byte's address because the stored command byte address has been autoincremented after the write (Table 2). A diagram of a read from the input ports register is shown in Figure 10 reflecting the states of the ports.

Operation with Multiple Masters

If the MAX7315 is operated on a 2-wire interface with multiple masters, a master reading the MAX7315 should use a repeated start between the write, which sets the MAX7315's address pointer, and the read(s) that takes the data from the location(s) (Table 2). This is because it is possible for master 2 to take over the bus after master 1 has set up the MAX7315's address pointer but before master 1 has read the data. If master 2 subsequently changes the MAX7315's address pointer, then master 1's delayed read can be from an unexpected location.

8-Port I/O Expander with LED Intensity Control, Interrupt, and Hot-Insertion Protection

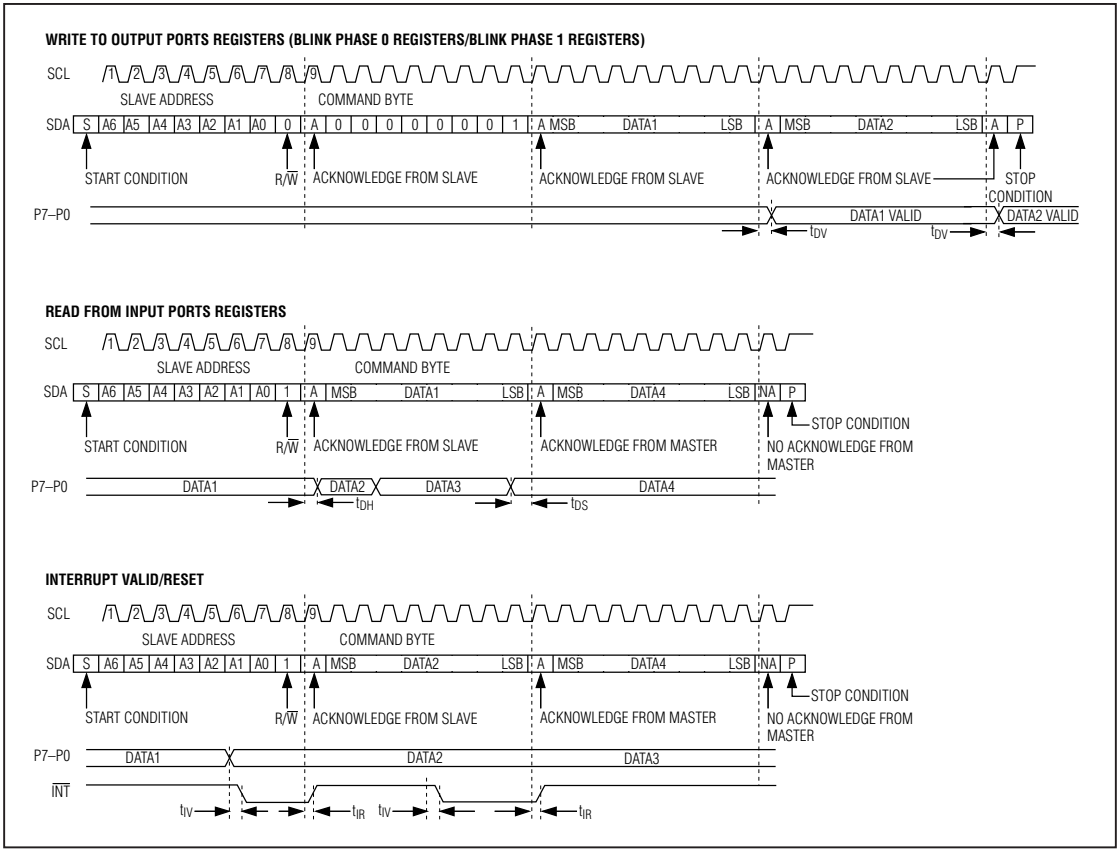

Figure 10. Read, Write, and Interrupt Timing Diagrams

Command Address Autoincrementing

The command address stored in the MAX7315 circulates around grouped register functions after each data byte is written or read (Table 2).

Device Reset

If a device reset input is needed, consider the MAX7316. The MAX7316 includes a $\overline{RST}$ input, which clears any transaction to or from the MAX7316 on the serial interface and configures the internal registers to the same state as a power-up reset.

Detailed Description

Initial Power-Up

On power-up all control registers are reset and the MAX7315 enters standby mode (Table 3). Power-up status makes all ports into inputs and disables both the PWM oscillator and blink functionality.

Configuration Register

The configuration register is used to configure the PWM intensity mode, interrupt, and blink behavior, operate the $\overline{INT}$/O8 output, and read back the interrupt status (Table 4).

Table 2. Register Address Map

REGISTER	ADDRESS CODE (HEX)	AUTOINCREMENT ADDRESS
Read input ports	0x00	0x00 (no change)
Blink phase 0 outputs	0x01	0x01 (no change)
Ports configuration	0x03	0x03 (no change)
Blink phase 1 outputs	0x09	0x09 (no change)
Master, O8 intensity	0x0E	0x0E (no change)
Configuration	0x0F	0x0F (no change)
Outputs intensity P1, P0	0x10	0x11
Outputs intensity P3, P2	0x11	0x12
Outputs intensity P5, P4	0x12	0x13
Outputs intensity P7, P6	0x13	0x10

Ports Configuration

The 8 I/O ports P0 through P7 can be configured to any combination of inputs and outputs using the ports configuration register (Table 5). The $\overline{\text{INT}}$/O8 output can also be configured as an extra general-purpose output using the configuration register (Table 4).

Input Ports

The input ports register is read only (Table 6). It reflect the incoming logic levels of the ports, regardless of whether the port is defined as an input or an output by the ports configuration register. Reading the input ports register latches the current-input logic level of the affected eight ports. A write to the input ports register is ignored.

Transition Detection

All ports configured as inputs are always monitored for changes in their logic status. The action of reading the input ports register or writing to the configuration register samples the corresponding 8 port bits' input condition (Tables 4, 6). This sample is continuously compared with the actual input conditions. A detected change in input condition causes an interrupt condition. The interrupt is cleared either automatically if the changed input returns to its original state, or when the input ports register is read, updating the compared data (Figure 10). Randomly changing a port from an output to an input may cause a false interrupt to occur if the state of the input does not match the content of the input ports register. The interrupt status is available as the interrupt flag $\overline{\text{INT}}$ in the configuration register (Table 4).

The input status of all ports is sampled immediately after power-up as part of the MAX7315's internal initialization, so if all the ports are pulled to valid logic levels at that time an interrupt does not occur at power-up.

$\overline{\text{INT}}$/O8 Output

The $\overline{\text{INT}}$/O8 output pin can be configured as either the $\overline{\text{INT}}$ output that reflects the interrupt flag logic state or as a general-purpose output O8. When used as a general-purpose output, the $\overline{\text{INT}}$/O8 pin has the same blink and PWM intensity control capabilities as the other ports.

Set the interrupt enable I bit in the configuration register to configure $\overline{\text{INT}}$/O8 as the $\overline{\text{INT}}$ output (Table 4). Clear interrupt enable to configure $\overline{\text{INT}}$/O8 as the O8. O8 logic state is set by the 2 bits O1 and O0 in the configuration register. O8 follows the rules for blinking selected by the blink enable flag E in the configuration register. If blinking is disabled, then interrupt output control O0 alone sets the logic state of the $\overline{\text{INT}}$/O8 pin. If blinking is enabled, then both interrupt output controls O0 and O1 set the logic state of the $\overline{\text{INT}}$/O8 pin according to the blink phase. PWM intensity control for O8 is set by the 4 global intensity bits in the master, O8 intensity register (Table 13).

Blink Mode

In blink mode, the output ports can be flipped between using either the blink phase 0 register or the blink phase 1 register. Flip control is by software control (the blink flip flag B in the configuration register) (Table 4). If hardware flip control is needed, consider the MAX7316, which includes a BLINK input, as well as software control.

The blink function can be used for LED effects by programming different display patterns in the two sets of

8-Port I/O Expander with LED Intensity Control, Interrupt, and Hot-Insertion Protection

Table 3. Power-Up Configuration

REGISTER FUNCTION	POWER-UP CONDITION	ADDRESS CODE (HEX)	REGISTER DATA							
			D7	D6	D5	D4	D3	D2	D1	D0
Blink phase 0 outputs P7–P0	High-impedance outputs	0x01	1	1	1	1	1	1	1	1
Ports configuration P7–P0	Ports P7–P0 are inputs	0x03	1	1	1	1	1	1	1	1
Blink phase 1 outputs P7–P0	High-impedance outputs	0x09	1	1	1	1	1	1	1	1
Master, O8 intensity	PWM oscillator is disabled; O8 is static logic output	0x0E	0	0	0	0	1	1	1	1
Configuration	$\overline{INT}$/O8 is interrupt output; blink is disabled; global intensity is enabled	0x0F	0	0	0	0	1	1	0	0
Outputs intensity P1, P0	P1, P0 are static logic outputs	0x10	1	1	1	1	1	1	1	1
Outputs Intensity P3, P2	P3, P2 are static logic outputs	0x11	1	1	1	1	1	1	1	1
Outputs intensity P5, P4	P5, P4 are static logic outputs	0x12	1	1	1	1	1	1	1	1
Outputs intensity P7, P6	P7, P6 are static logic outputs	0x13	1	1	1	1	1	1	1	1

Table 4. Configuration Register

REGISTER	R/$\overline{W}$	ADDRESS CODE (HEX)	REGISTER DATA							
			D7	D6	D5	D4	D3	D2	D1	D0
CONFIGURATION			**INTERRUPT STATUS**	**—**	**INTERRUPT OUTPUT CONTROL AS GPO**		**INTERRUPT ENABLE**	**GLOBAL INTENSITY**	**BLINK FLIP**	**BLINK ENABLE**
Write device configuration	0	0x0F	**$\overline{INT}$**	**X**	**O1**	**O0**	**I**	**G**	**B**	**E**
Read-back device configuration	1			**O**						
Disable blink	—		X	X	X	X	X	X	X	**0**
Enable blink	—		X	X	X	X	X	X	X	**1**
Flip blink register (see text)	—		X	X	X	X	X	X	**0**	**1**
	—		X	X	X	X	X	X	**1**	**1**
Disable global intensity control—intensity is set by registers 0x10–0x13 for ports P0 through P7 when configured as outputs, and by D3–D7 of register 0x0E for $\overline{INT}$/O8 when $\overline{INT}$/O8 pin is configured as an output port	—		X	X	X	X	X	**0**	X	X
Enable global intensity control—intensity for all ports configured as outputs is set by D3–D0 of register 0x0E	—		X	X	X	X	X	**1**	X	X

X = Don't care.

Table 4. Configuration register (continued)

REGISTER	R/$\overline{W}$	ADDRESS CODE (HEX)	REGISTER DATA							
			D7	D6	D5	D4	D3	D2	D1	D0
CONFIGURATION			INTERRUPT STATUS	—	INTERRUPT OUTPUT CONTROL AS GPO		INTERRUPT ENABLE	GLOBAL INTENSITY	BLINK FLIP	BLINK ENABLE
Disable data change interrupt—$\overline{INT}$/O8 output is controlled by the O0 and O1 bits	—	0x0F	$\overline{INT}$	X / O	O1	O0	I	G	B	E
Enable data change interrupt—$\overline{INT}$/O8 output is controlled by port input data change	—		X	X	X	X	**1**	X	X	X
$\overline{INT}$/O8 output is low (blink is disabled)	—		X	X	X	**0**	**0**	X	X	**0**
$\overline{INT}$/O8 output is high impedance (blink is disabled)	—		X	X	X	**1**	**0**	X	X	**0**
$\overline{INT}$/O8 output is low during blink phase 0	—		X	X	X	**0**	**0**	X	X	**1**
$\overline{INT}$/O8 output is high impedance during blink phase 0	—		X	X	X	**1**	**0**	X	X	**1**
$\overline{INT}$/O8 output is low during blink phase 1	—		X	X	**0**	X	**0**	X	X	**1**
$\overline{INT}$/O8 output is high impedance during blink phase 1	—		X	X	**1**	X	**0**	X	X	**1**
Read-back data change interrupt status —data change is not detected, and $\overline{INT}$/O8 output is high when interrupt enable (I bit) is set	1		**0**	0	X	X	X	X	X	X
Read-back data change interrupt status —data change is detected, and $\overline{INT}$/O8 output is low when interrupt enable (I bit) is set	1		**1**	0	X	X	X	X	X	X

X = Don't care.

output port registers, and using the software or hardware controls to flip between the patterns.

If the blink phase 1 register is written with 0xFF, then the BLINK input can be used as a hardware disable to, for example, instantly turn off an LED pattern programmed into the blink phase 0 register. This technique can be further extended by driving the BLINK input with a PWM signal to modulate the LED current to provide fading effects.

The blink mode is enabled by setting the blink enable flag E in the configuration register (Table 4). When blink mode is enabled, the state of the blink flip flag sets the phase, and the output ports are set by either the blink phase 0 register or the blink phase 1 register (Table 7).

The blink mode is disabled by clearing the blink enable flag E in the configuration register (Table 4). When blink mode is disabled, the blink phase 0 register alone controls the output ports.

Blink Phase Registers

When the blink function is disabled, the blink phase 0 register sets the logic levels of the 8 ports (P0 through P7) when configured as outputs (Table 8). A duplicate register called the blink phase 1 register is also used if the blink function is enabled (Table 9). A logic high sets the appropriate output port high impedance, while a logic low makes the port go low.

8-Port I/O Expander with LED Intensity Control, Interrupt, and Hot-Insertion Protection

Table 5. Ports Configuration Register

REGISTER	R/$\overline{W}$	ADDRESS CODE (HEX)	REGISTER DATA							
			D7	D6	D5	D4	D3	D2	D1	D0
Ports configuration (1 = input, 0 = output)	0	0x03	OP7	OP6	OP5	OP4	OP3	OP2	OP1	OP0
Read-back ports configuration	1									

Table 6. Input Ports Register

REGISTER	R/$\overline{W}$	ADDRESS CODE (HEX)	REGISTER DATA							
			D7	D6	D5	D4	D3	D2	D1	D0
Read input ports	1	0x00	IP7	IP6	IP5	IP4	IP3	IP2	IP1	IP0

Reading a blink phase register reads the value stored in the register, not the actual port condition. The port output itself may or may not be at a valid logic level, depending on the external load connected.

The 9th output, O8, is controlled through 2 bits in the configuration register, which provide the same static or blink control as the other 8 output ports.

PWM Intensity Control

The MAX7315 includes an internal oscillator, nominally 32kHz, to generate PWM timing for LED intensity control or other applications such as PWM trim DACs. PWM can be disabled entirely for all the outputs. In this case, all outputs are static and the MAX7315 operating current is lowest because the internal PWM oscillator is turned off.

The MAX7315 can be configured to provide any combination of PWM outputs and glitch-free logic outputs. Each PWM output has an individual 4-bit intensity control (Table 14). When all outputs are to be used with the same PWM setting, the outputs can be controlled together instead using the global intensity control (Table 13). Table 10 shows how to set up the MAX7315 to suit a particular application.

PWM Timing

The PWM control uses a 240-step PWM period, divided into 15 master intensity timeslots. Each master intensity timeslot is divided further into 16 PWM cycles (Figure 11).

The master intensity operates as a gate, allowing the individual output settings to be enabled from 1 to 15 timeslots per PWM period (Figures 12, 13, 14) (Table 13).

Each output's individual 4-bit intensity control only operates during the number of timeslots gated by the master intensity. The individual controls provide 16 intensity settings from 1/16 through 16/16 (Table 14).

Figures 15, 16, and 17 show examples of individual intensity control settings. The highest value an individual or global setting can be set to is 16/16. This setting forces the output to ignore the master control, and follow the logic level set by the appropriate blink phase register bit. The output becomes a glitch-free static output with no PWM.

Using PWM Intensity Controls with Blink Disabled

When blink is disabled (Table 7), the blink phase 0 register specifies each output's logic level during the PWM on-time (Table 8). The effect of setting an output's blink phase 0 register bit to 0 or 1 is shown in Table 11. With its output bit set to zero, an LED can be controlled with 16 intensity settings from 1/16th duty through fully on, but cannot be turned fully off using the PWM intensity control. With its output bit set to 1, an LED can be controlled with 16 intensity settings from fully off through 15/16th duty.

Table 7. Blink Controls

BLINK ENABLE FLAG E	BLINK FLIP FLAG B	BLINK FUNCTION	OUTPUT REGISTERS USED
0	X	Disabled	Blink phase 0 register
1	0	Enabled	Blink phase 0 register
	1		Blink phase 1 register

X = Don't care.

Using PWM Intensity Controls with Blink Enabled

When blink is enabled (Table 7), the blink phase 0 register and blink phase 1 register specify each output's logic level during the PWM on-time during the respective blink phases (Tables 8 and 9). The effect of setting an output's blink phase X register bit to 0 or 1 is shown in Table 12. LEDs can be flipped between either directly on and off, or between a variety of high/low PWM intensities.

Global/O8 Intensity Control

The 4 bits used for output O8's PWM individual intensity setting also double as the global intensity control (Table 13). Global intensity simplifies the PWM settings when the application requires them all to be the same, such as for backlight applications, by replacing the 9 individual settings with 1 setting. Global intensity is enabled with the global intensity flag G in the configuration register (Table 4). When global PWM control is used, the 4 bits of master intensity and 4 bits of O8 intensity effectively combine to provide an 8 bit, 240-step intensity control applying to all outputs.

It is not possible to apply global PWM control to a subset of the ports, and use the others as logic outputs. To mix static logic outputs and PWM outputs, individual PWM control must be selected (Table 10).

Applications Information

Hot Insertion

I/O ports PO-P7, interrupt output $\overline{INT}$/08, and serial interface SDA, SCL, AD0-2 remain high impedance with up to 6V asserted on them when the MAX7315 is powered down (V+ = 0V). The MAX7315 can therefore be used in hot-swap applications.

Output Level Translation

The open-drain output architecture allows the ports to level translate the outputs to higher or lower voltages than the MAX7315 supply. An external pullup resistor can be used on any output to convert the high-impedance logic-high condition to a positive voltage level. The resistor can be connected to any voltage up to 5.5V. For interfacing CMOS inputs, a pullup resistor value of 220kΩ is a good starting point. Use a lower resistance to improve noise immunity, in applications where power consumption is less critical, or where a faster rise time is needed for a given capacitive load.

Compatibility with PCA9534 and PCA9554(A)

The MAX7315 is pin compatible and software compatible with PCA9534, and its variants PCA9554 and PCA9554A. However, some PCA9534 and PCA9554(A) functions are not implemented in the MAX7315, and the MAX7315's PWM and blink functionality is not supported in the PCA9534 and PCA9554(A). Software compatibility is clearly not 100%, but the MAX7315 was designed so the subset (omitted) features default to the same power-up behavior as the PCA9534 and PCA9554(A), and the superset features do not use existing registers in a different way. In practice, many applications can use the MAX7315 as a drop-in replacement for the PCA9534 or PCA9554(A) with no software change.

Driving LED Loads

When driving LEDs, a resistor in series with the LED must be used to limit the LED current to no more than 50mA. Choose the resistor value according to the following formula:

$$R_{LED} = (V_{SUPPLY} - V_{LED} - V_{OL}) / I_{LED}$$

Table 8. Blink Phase 0 Register

REGISTER	R/$\overline{W}$	ADDRESS CODE (HEX)	REGISTER DATA							
			D7	D6	D5	D4	D3	D2	D1	D0
Write outputs phase 0	0	0x01	OP7	OP6	OP5	OP4	OP3	OP2	OP1	OP0
Read-back outputs phase 0	1									

Table 9. Blink Phase 1 Register

REGISTER	R/$\overline{W}$	ADDRESS CODE (HEX)	REGISTER DATA							
			D7	D6	D5	D4	D3	D2	D1	D0
Write outputs phase 1	0	0x09	OP7	OP6	OP5	OP4	OP3	OP2	OP1	OP0
Read-back outputs phase 1	1									

8-Port I/O Expander with LED Intensity Control, Interrupt, and Hot-Insertion Protection

Table 10. PWM Application Scenarios

APPLICATION	RECOMMENDED CONFIGURATION
All outputs static without PWM	Set the master, O8 intensity register 0x0E to any value from 0x00 to 0x0F. The global intensity G bit in the configuration register is don't care. The output intensity registers 0x10 through 0x13 are don't care.
A mix of static and PWM outputs, with PWM outputs using different PWM settings	Set the master, O8 intensity register 0x0E to any value from 0x10 to 0xFF. Clear global intensity G bit to 0 in the configuration register to disable global intensity control. For the static outputs, set the output intensity value to 0xF. For the PWM outputs, set the output intensity value in the range 0x0 to 0xE.
A mix of static and PWM outputs, with PWM outputs all using the same PWM setting	As above. Global intensity control cannot be used with a mix of static and PWM outputs, so write the individual intensity registers with the same PWM value.
All outputs PWM using the same PWM setting	Set the master, O8 intensity register 0x0E to any value from 0x10 to 0xFF. Set global intensity G bit to 1 in the configuration register to enable global intensity control. The master, O8 intensity register 0x0E is the only intensity register used. The output intensity registers 0x10 through 0x13 are don't care.

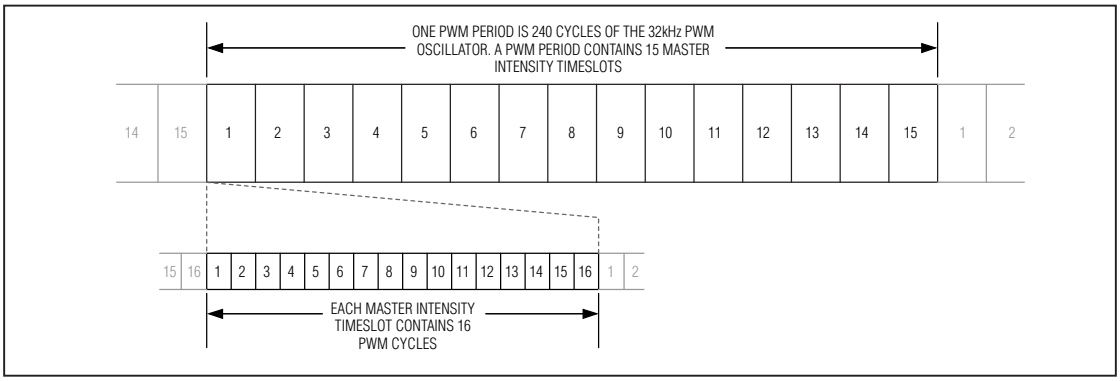

Figure 11. PWM Timing

Figure 12. Master Set to 1/15

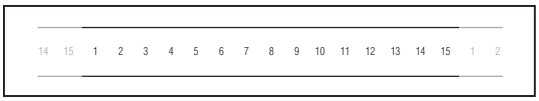

Figure 14. Master Set to 15/15

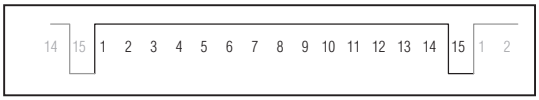

Figure 13. Master Set to 14/15

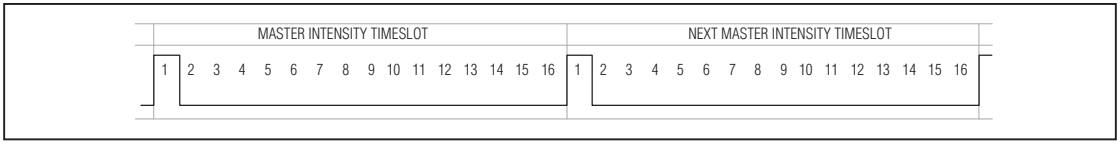

Figure 15. Individual (or Global) Set to 1/16

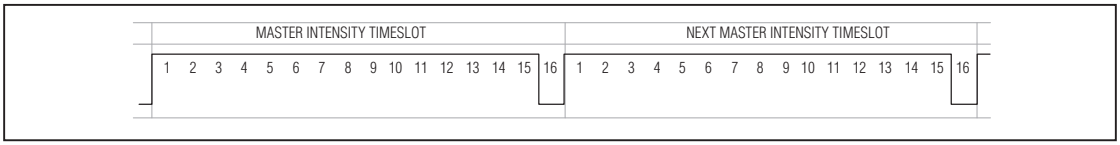

Figure 16. Individual (or Global) Set to 15/16

Figure 17. Individual (or Global) Set to 16/16

Table 11. PWM Intensity Settings (Blink Disabled)

OUTPUT (OR GLOBAL) INTENSITY SETTING	PWM DUTY CYCLE OUTPUT BLINK PHASE 0 REGISTER BIT = 0		LED BEHAVIOR WHEN OUTPUT BLINK PHASE 0 REGISTER BIT = 0 (LED IS ON WHEN OUTPUT IS LOW)	PWM DUTY CYCLE OUTPUT BLINK PHASE 0 REGISTER BIT = 1		LED BEHAVIOR WHEN OUTPUT BLINK PHASE 0 REGISTER BIT = 1 (LED IS ON WHEN OUTPUT IS LOW)
	LOW TIME	HIGH TIME		LOW TIME	HIGH TIME	
0x0	1/16	15/16	Lowest PWM intensity	15/16	1/16	Highest PWM intensity
0x1	2/16	14/16	← Increasing PWM intensity	14/16	2/16	Increasing PWM intensity →
0x2	3/16	13/16		13/16	3/16	
0x3	4/16	12/16		12/16	4/16	
0x4	5/16	11/16		11/16	5/16	
0x5	6/16	10/16		10/16	6/16	
0x6	7/16	9/16		9/16	7/16	
0x7	8/16	8/16		8/16	8/16	
0x8	9/16	7/16		7/16	9/16	
0x9	10/16	6/16		6/16	10/16	
0xA	11/16	5/16		5/16	11/16	
0xB	12/16	4/16		4/16	12/16	
0xC	13/16	3/16		3/16	13/16	
0xD	14/16	2/16		2/16	14/16	
0xE	15/16	1/16	Highest PWM intensity	1/16	15/16	Lowest PWM intensity
0xF	Static low	Static low	Full intensity, no PWM (LED on continuously)	Static high impedance	Static high impedance	LED off continuously

8-Port I/O Expander with LED Intensity Control, Interrupt, and Hot-Insertion Protection

where:

R_{LED} is the resistance of the resistor in series with the LED (Ω).
V_{SUPPLY} is the supply voltage used to drive the LED (V).
V_{LED} is the forward voltage of the LED (V).
V_{OL} is the output low voltage of the MAX7315 when sinking I_{LED} (V).
I_{LED} is the desired operating current of the LED (A).

For example, to operate a 2.2V red LED at 14mA from a 5V supply, R_{LED} = (5 - 2.2 - 0.25) / 0.014 = 182Ω.

Driving Load Currents Higher than 50mA

The MAX7315 can be used to drive loads drawing more than 50mA, like relays and high-current white LEDs, by paralleling outputs. Use at least one output per 50mA of load current; for example, a 5V 330mW relay draws 66mA and needs two paralleled outputs to drive it. Ensure that the paralleled outputs chosen are controlled by the same blink phase register, i.e., select outputs from the P0 through P7 range. This way, the paralleled outputs are turned on and off together. Do not use output O8 as part of a load-sharing design. O8 cannot be switched at the same time as any of the other outputs because it is controlled by a different register.

The MAX7315 must be protected from the negative voltage transient generated when switching off inductive loads, such as relays, by connecting a reverse-biased diode across the inductive load (Figure 18). The peak current through the diode is the inductive load's operating current.

Power-Supply Considerations

The MAX7315 operates with a power-supply voltage of 2V to 3.6V. Bypass the power supply to GND with at least 0.047µF as close to the device as possible. For the QFN version, connect the underside exposed pad to GND.

Chip Information

TRANSISTOR COUNT: 17,611

PROCESS: BiCMOS

Table 12. PWM Intensity Settings (Blink Enabled)

OUTPUT (OR GLOBAL) INTENSITY SETTING	PWM DUTY CYCLE OUTPUT BLINK PHASE X REGISTER BIT = 0		PWM DUTY CYCLE OUTPUT BLINK PHASE X REGISTER BIT = 1		EXAMPLES OF LED BLINK BEHAVIOR (LED IS ON WHEN OUTPUT IS LOW)	
					BLINK PHASE 0 REGISTER BIT = 0 BLINK PHASE 1 REGISTER BIT = 1	BLINK PHASE 0 REGISTER BIT = 1 BLINK PHASE 1 REGISTER BIT = 0
	LOW TIME	HIGH TIME	LOW TIME	HIGH TIME		
0x0	1/16	15/16	15/16	1/16	Phase 0: LED on at low intensity Phase 1: LED on at high intensity	Phase 0: LED on at high intensity Phase 1: LED on at low intensity
0x1	2/16	14/16	14/16	2/16		
0x2	3/16	13/16	13/16	3/16		
0x3	4/16	12/16	12/16	4/16		
0x4	5/16	11/16	11/16	5/16		
0x5	6/16	10/16	10/16	6/16		
0x6	7/16	9/16	9/16	7/16		
0x7	8/16	8/16	8/16	8/16	Output is half intensity during both blink phases	
0x8	9/16	7/16	7/16	9/16	Phase 0: LED on at high intensity Phase 1: LED on at low intensity	Phase 0: LED on at low intensity Phase 1: LED on at high intensity
0x9	10/16	6/16	6/16	10/16		
0xA	11/16	5/16	5/16	11/16		
0xB	12/16	4/16	4/16	12/16		
0xC	13/16	3/16	3/16	13/16		
0xD	14/16	2/16	2/16	14/16		
0xE	15/16	1/16	1/16	15/16		
0xF	Static low	Static low	Static high impedance	Static high impedance	Phase 0: LED on continuously Phase 1: LED off continuously	Phase 0: LED off continuously Phase 1: LED on continuously

Table 13. Master, O8 Intensity Register

REGISTER	R/$\overline{W}$	ADDRESS CODE (HEX)	REGISTER DATA							
			D7	D6	D5	D4	D3	D2	D1	D0
MASTER AND GLOBAL INTENSITY			**MSB**			**LSB**	**MSB**			**LSB**
			MASTER INTENSITY				**O8 INTENSITY**			
Write master and global intensity	0		M3	M2	M1	M0	G3	G2	G1	G0
Read back master and global intensity	1									
Master intensity duty cycle is 0/15 (off); **internal oscillator is disabled;** all outputs will be static with no PWM	—		0	0	0	0	—	—	—	—
Master intensity duty cycle is 1/15	—		0	0	0	1	—	—	—	—
Master intensity duty cycle is 2/15	—		0	0	1	0	—	—	—	—
Master intensity duty cycle is 3/15	—		0	0	1	1	—	—	—	—
—	—		—	—	—	—	—	—	—	—
Master intensity duty cycle is 13/15	—	0X0E	1	1	0	1	—	—	—	—
Master intensity duty cycle is 14/15	—		1	1	1	0	—	—	—	—
Master intensity duty cycle is 15/15 (full)	—		1	1	1	1	—	—	—	—
O8 intensity duty cycle is 1/16	—		—	—	—	—	0	0	0	0
O8 intensity duty cycle is 2/16	—		—	—	—	—	0	0	0	1
O8 intensity duty cycle is 3/16	—		—	—	—	—	0	0	1	0
—	—		—	—	—	—	—	—	—	—
O8 intensity duty cycle is 14/16	—		—	—	—	—	1	1	0	1
O8 intensity duty cycle is 15/16	—		—	—	—	—	1	1	1	0
O8 intensity duty cycle is 16/16 (static output, no PWM)	—		—	—	—	—	1	1	1	1

8-Port I/O Expander with LED Intensity Control, Interrupt, and Hot-Insertion Protection

Table 14. Output Intensity Registers

REGISTER	R/$\overline{W}$	ADDRESS CODE (HEX)	REGISTER DATA							
			D7	D6	D5	D4	D3	D2	D1	D0
OUTPUTS P1, P0 INTENSITY		0X10	**MSB**			**LSB**	**MSB**			**LSB**
			OUTPUT P1 INTENSITY				**OUTPUT P0 INTENSITY**			
Write output P1, P0 intensity	0		P1I3	P1I2	P1I1	P1I0	P0I3	P0I2	P0I1	P0I0
Read back output P1, P0 intensity	1									
Output P1 intensity duty cycle is 1/16	—		0	0	0	0	—	—	—	—
Output P1 intensity duty cycle is 2/16	—		0	0	0	1	—	—	—	—
Output P1 intensity duty cycle is 3/16	—		0	0	1	0	—	—	—	—
—	—		—	—	—	—	—	—	—	—
Output P1 intensity duty cycle is 14/16	—		1	1	0	1	—	—	—	—
Output P1 intensity duty cycle is 15/16	—		1	1	1	0	—	—	—	—
Output P1 intensity duty cycle is 16/16 (static logic level, no PWM)	—		1	1	1	1	—	—	—	—
Output P0 intensity duty cycle is 1/16	—		—	—	—	—	0	0	0	0
Output P0 intensity duty cycle is 2/16	—		—	—	—	—	0	0	0	1
Output P0 intensity duty cycle is 3/16	—		—	—	—	—	0	0	1	0
—	—		—	—	—	—	—	—	—	—
Output P0 intensity duty cycle is 14/16	—		—	—	—	—	1	1	0	1
Output P0 intensity duty cycle is 15/16	—		—	—	—	—	1	1	1	0
Output P0 intensity duty cycle is 16/16 (static logic level, no PWM)	—		—	—	—	—	1	1	1	1
OUTPUTS P3, P2 INTENSITY		0x11	**MSB**			**LSB**	**MSB**			**LSB**
			OUTPUT P3 INTENSITY				**OUTPUT P2 INTENSITY**			
Write output P3, P2 intensity	0		P3I3	P3I2	P3I1	P3I0	P2I3	P2I2	P2I1	P2I0
Read back output P3, P2 intensity	1									
OUTPUTS P5, P4 INTENSITY		0x12	**MSB**			**LSB**	**MSB**			**LSB**
			OUTPUT P5 INTENSITY				**OUTPUT P4 INTENSITY**			
Write output P5, P4 intensity	0		P5I3	P5I2	P5I1	P5I0	P4I3	P4I2	P4I1	P4I0
Read back output P5, P4 intensity	1									
OUTPUTS P7, P6 INTENSITY		0x13	**MSB**			**LSB**	**MSB**			**LSB**
			OUTPUT P7 INTENSITY				**OUTPUT P6 INTENSITY**			
Write output P7, P6 intensity	0		P7I3	P7I2	P7I1	P7I0	P6I3	P6I2	P6I1	P6I0
Read back output P7, P6 intensity	1									
OUTPUT O8 INTENSITY			See the master, O8 intensity register (Table 13).							

Table 15. MAX7311, PCA9535, and PCA9555 Register Compatibility

PCA9534, PCA9554(A) REGISTER	ADDRESS	MAX7313 IMPLEMENTATION	MAX7311, PCA9535, PCA9555 IMPLEMENTATION	COMMENTS
Inputs	0x00	Inputs registers	Implemented	Same functionality
Outputs	0x01	Blink phase 0 registers	Implemented	Same functionality
Polarity inversion	0x02	Not implemented; register writes are ignored; register reads return 0x00	Implemented; power-up default is 0x00	If polarity inversion feature is unused, MAX7313 defaults to correct state
Configuration	0x03	Ports configuration registers	Not implemented	Same functionality
No registers	0x0B	Blink phase 1 registers	Not implemented	Power-up default disables the blink and intensity (PWM) features
No register	0x0E	Master and global/O8 intensity register	Not implemented	
No register	0x0F	Configuration register	Not implemented	
No registers	0x10–0x13	Outputs intensity registers	Not implemented	

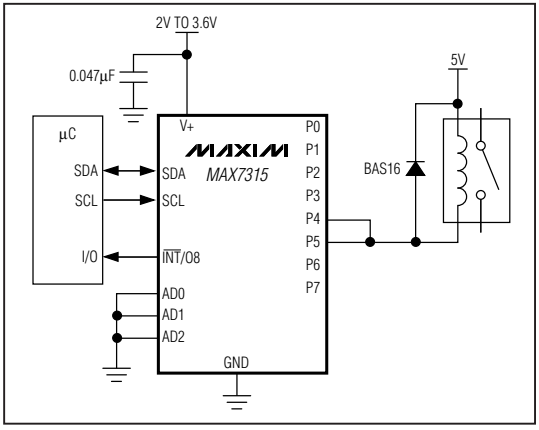

Figure 18. Diode-Protected Switching Inductive Load

Pin Configurations (continued)

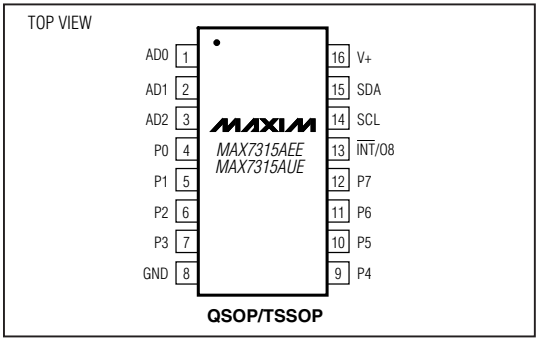

Typical Application Circuit

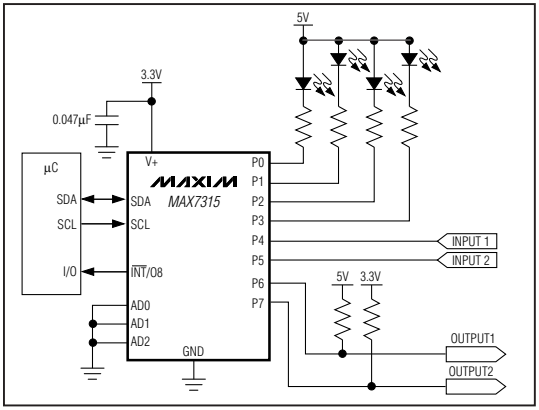

8-Port I/O Expander with LED Intensity Control, Interrupt, and Hot-Insertion Protection

Package Information

(The package drawing(s) in this data sheet may not reflect the most current specifications. For the latest package outline information, go to **www.maxim-ic.com/packages**.)

QSOP.EPS

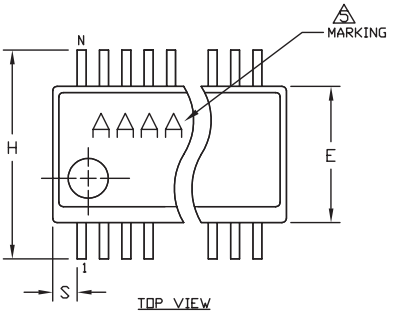

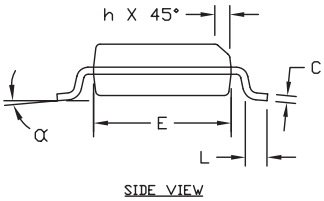

	INCHES		MILLIMETERS	
DIM	MIN	MAX	MIN	MAX
A	.053	.069	1.35	1.75
A1	.004	.010	.102	.254
A2	.049	.065	1.245	1.651
B	.008	.012	0.20	0.30
C	.0075	.0098	0.191	0.249
D	SEE VARIATIONS			
E	.150	.157	3.81	3.99
e	.025 BSC		0.635 BSC	
H	.230	.244	5.84	6.20
h	.010	.016	0.25	0.41
L	.016	.035	0.41	0.89
N	SEE VARIATIONS			
α	0°	8°	0°	8°

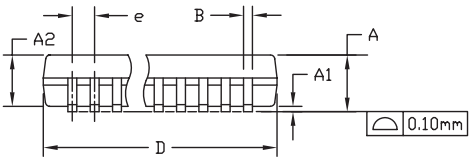

VARIATIONS:

	INCHES		MILLIMETERS			
	MIN.	MAX.	MIN.	MAX.	N	PKG CODES
D	.189	.196	4.80	4.98	16	E16-1, E16M-1, E16-3F, E16-4, E16-5, E16-6, E16-8F
S	.0020	.0070	0.05	0.18		
D	.337	.344	8.56	8.74	20	E20-1, E20-2
S	.0500	.0550	1.270	1.397		
D	.337	.344	8.56	8.74	24	E24-1, E24-2, E24-3F
S	.0250	.0300	0.635	0.762		
D	.386	.393	9.80	9.98	28	E28-1, E28M-1, E28-2
S	.0250	.0300	0.635	0.762		

NOTES:
1. D & E DO NOT INCLUDE MOLD FLASH OR PROTRUSIONS.
2. MOLD FLASH OR PROTRUSIONS NOT TO EXCEED .006" PER SIDE.
3. CONTROLLING DIMENSIONS: INCHES.
4. MEETS JEDEC MO137.
5. MARKING SHOWN IS FOR PKG. ORIENTATION ONLY.
6. ALL DIMENSIONS APPLY TO BOTH LEADED (–) AND PbFREE (+) PKG. CODES.

—DRAWING NOT TO SCALE—

MAXIM

TITLE: PACKAGE OUTLINE QSOP .150", .025" LEAD PITCH

APPROVAL	DOCUMENT CONTROL NO.	REV.	
	21-0055	G	1/1

Package Information (continued)

(The package drawing(s) in this data sheet may not reflect the most current specifications. For the latest package outline information, go to **www.maxim-ic.com/packages**.)

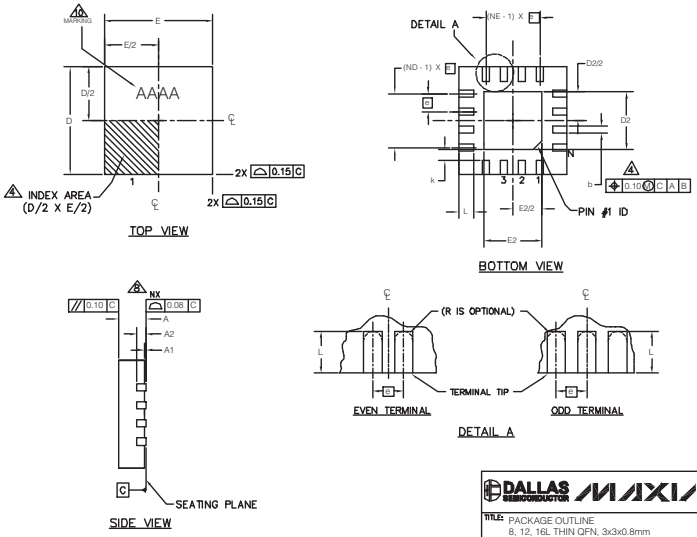

PKG	8L 3x3			12L 3x3			16L 3x3		
REF.	MIN.	NOM.	MAX.	MIN.	NOM.	MAX.	MIN.	NOM.	MAX.
A	0.70	0.75	0.80	0.70	0.75	0.80	0.70	0.75	0.80
b	0.25	0.30	0.35	0.20	0.25	0.30	0.20	0.25	0.30
D	2.90	3.00	3.10	2.90	3.00	3.10	2.90	3.00	3.10
E	2.90	3.00	3.10	2.90	3.00	3.10	2.90	3.00	3.10
e	0.65 BSC.			0.50 BSC.			0.50 BSC.		
L	0.35	0.55	0.75	0.45	0.55	0.65	0.30	0.40	0.50
N	8			12			16		
ND	2			3			4		
NE	2			3			4		
A1	0	0.02	0.05	0	0.02	0.05	0	0.02	0.05
A2	0.20 REF			0.20 REF			0.20 REF		
k	0.25	-	-	0.25	-	-	0.25	-	-

EXPOSED PAD VARIATIONS								
PKG. CODES	D2			E2			PIN ID	JEDEC
	MIN.	NOM.	MAX.	MIN.	NOM.	MAX.		
TQ833-1	0.25	0.70	1.25	0.25	0.70	1.25	0.35 x 45°	WEEC
T1233-1	0.95	1.10	1.25	0.95	1.10	1.25	0.35 x 45°	WEED-1
T1233-3	0.95	1.10	1.25	0.95	1.10	1.25	0.35 x 45°	WEED-1
T1233-4	0.95	1.10	1.25	0.95	1.10	1.25	0.35 x 45°	WEED-1
T1633-2	0.95	1.10	1.25	0.95	1.10	1.25	0.35 x 45°	WEED-2
T1633F-3	0.65	0.80	0.95	0.65	0.80	0.95	0.225 x 45°	WEED-2
T1633FH-3	0.65	0.80	0.95	0.65	0.80	0.95	0.225 x 45°	WEED-2
T1633-4	0.95	1.10	1.25	0.95	1.10	1.25	0.35 x 45°	WEED-2
T1633-5	0.95	1.10	1.25	0.95	1.10	1.25	0.35 x 45°	WEED-2

NOTES:

1. DIMENSIONING & TOLERANCING CONFORM TO ASME Y14.5M-1994.
2. ALL DIMENSIONS ARE IN MILLIMETERS. ANGLES ARE IN DEGREES.
3. N IS THE TOTAL NUMBER OF TERMINALS.
4. THE TERMINAL #1 IDENTIFIER AND TERMINAL NUMBERING CONVENTION SHALL CONFORM TO JESD 95-1 SPP-012. DETAILS OF TERMINAL #1 IDENTIFIER ARE OPTIONAL, BUT MUST BE LOCATED WITHIN THE ZONE INDICATED. THE TERMINAL #1 IDENTIFIER MAY BE EITHER A MOLD OR MARKED FEATURE.
5. DIMENSION b APPLIES TO METALLIZED TERMINAL AND IS MEASURED BETWEEN 0.20 mm AND 0.25 mm FROM TERMINAL TIP.
6. ND AND NE REFER TO THE NUMBER OF TERMINALS ON EACH D AND E SIDE RESPECTIVELY.
7. DEPOPULATION IS POSSIBLE IN A SYMMETRICAL FASHION.
8. COPLANARITY APPLIES TO THE EXPOSED HEAT SINK SLUG AS WELL AS THE TERMINALS .
9. DRAWING CONFORMS TO JEDEC MO220 REVISION C.
10. MARKING IS FOR PACKAGE ORIENTATION REFERENCE ONLY.
11. NUMBER OF LEADS SHOWN ARE FOR REFERENCE ONLY.
12. WARPAGE NOT TO EXCEED 0.10mm.

DALLAS SEMICONDUCTOR MAXIM

TITLE: PACKAGE OUTLINE 8, 12, 16L THIN QFN, 3x3x0.8mm

APPROVAL | DOCUMENT CONTROL NO. 21-0136 | REV. I | 2/2

—DRAWING NOT TO SCALE—

8-Port I/O Expander with LED Intensity Control, Interrupt, and Hot-Insertion Protection

Package Information (continued)

(The package drawing(s) in this data sheet may not reflect the most current specifications. For the latest package outline information, go to **www.maxim-ic.com/packages**.)

TSSOP4.40mm.EPS

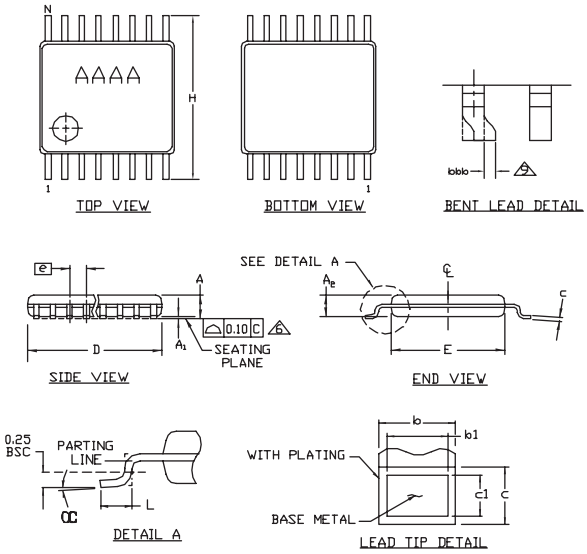

SYMBOL	COMMON DIMENSIONS			
	MILLIMETERS		INCHES	
	MIN.	MAX.	MIN.	MAX.
A	——	1.10		.043
A_1	0.05	0.15	.002	.006
A_2	0.85	0.95	.033	.037
b	0.19	0.30	.007	.012
b_1	0.19	0.25	.007	.010
c	0.09	0.20	.004	.008
c_1	0.09	0.14	.004	.006
D	SEE VARIATIONS		SEE VARIATIONS	
E	4.30	4.50	.169	.177
e	0.65 BSC		.026 BSC	
H	6.25	6.55	.246	.258
L	0.50	0.70	.020	.028
N	SEE VARIATIONS		SEE VARIATIONS	
α	0°	8°	0°	8°
aaa	0.10 MAX			

JEDEC MO-153	N		PKG. CODES	VARIATIONS			
				MILLIMETERS		INCHES	
				MIN.	MAX.	MIN.	MAX.
AB-1	14	D	U14-1; U14-2	4.90	5.10	.193	.201
AB	16	D	U16-1; U16-2	4.90	5.10	.193	.201
AC	20	D	U20-2; U20-3	6.40	6.60	.252	.260
AD	24	D	U24-1	7.70	7.90	.303	.311
AE	28	D	U28-1; U28-2; U28-3	9.60	9.80	.378	.386

NOTES
1. DIMENSIONS D AND E DO NOT INCLUDE FLASH
2. MOLD FLASH OR PROTRUSIONS NOT TO EXCEED 0.15mm PER SIDE
3. CONTROLLING DIMENSION: MILLIMETER
4. MEETS JEDEC OUTLINE MO-153. SEE JEDEC VARIATIONS TABLE
5. "N" REFERS TO NUMBER OF LEADS
6. LEAD COPLANARITY 0.10 MM MAX.
7. NUMBER OF LEADS SHOWN ARE FOR REFERENCE ONLY
8. MARKING IS FOR PACKAGE ORIENTATION REFERENCE ONLY
9. BENT LEAD 0.10 MM MAX.

-DRAWING NOT TO SCALE-

DALLAS SEMICONDUCTOR MAXIM

TITLE: PACKAGE OUTLINE, TSSOP 4.40mm BODY

APPROVAL	DOCUMENT CONTROL NO.	REV.	
	21-0066	I	1/1

Maxim cannot assume responsibility for use of any circuitry other than circuitry entirely embodied in a Maxim product. No circuit patent licenses are implied. Maxim reserves the right to change the circuitry and specifications without notice at any time.

© 2005 Maxim Integrated Products Printed USA MAXIM is a registered trademark of Maxim Integrated Products.