Overview

The DSP56374 is a high density CMOS device with 3.3 V inputs and outputs.

NOTE

This document contains information on a new product. Specifications and information herein are subject to change without notice.

Finalized specifications may be published after further characterization and device qualifications are completed.

The DSP56374 supports digital audio applications requiring sound field processing, acoustic equalization, and other digital audio algorithms. The DSP56374 uses the high performance, single-clock-per-cycle DSP56300 core family of programmable CMOS digital signal processors (DSPs) combined with the audio signal processing capability of the Freescale Semiconductor, Inc. (formerly Motorola) Symphony™ DSP family, as shown in Figure 1. Significant architectural enhancements include a barrel shifter, 24-bit addressing, and direct memory access (DMA). The DSP56374 offers 150 million instructions per second (MIPS) using an internal 150 MHz clock.

Data Sheet Conventions

This data sheet uses the following conventions:

$\overline{\text{OVERBAR}}$	Used to indicate a signal that is active when pulled low (For example, the $\overline{\text{RESET}}$ pin is active when low.)
"asserted"	Means that a high true (active high) signal is high or that a low true (active low) signal is low
"deasserted"	Means that a high true (active high) signal is low or that a low true (active low) signal is high

Examples:

Signal/ Symbol	Logic State	Signal State	Voltage*
$\overline{\text{PIN}}$	True	Asserted	V_{IL} / V_{OL}
$\overline{\text{PIN}}$	False	Deasserted	V_{IH} / V_{OH}
PIN	True	Asserted	V_{IH} / V_{OH}
PIN	False	Deasserted	V_{IL} / V_{OL}

Note: *Values for V_{IL}, V_{OL}, V_{IH}, and V_{OH} are defined by individual product specifications.

Table of Contents

Section	Page
1 Features	2
2 Documentation	4
3 Signal Groupings	4
4 Maximum Ratings	24
5 Power Requirements	25
6 Thermal Characteristics	26
7 DC Electrical Characteristics	26
8 AC Electrical Characteristics	27
9 Internal Clocks	27
10 External Clock Operation	29
11 Reset, Stop, Mode Select, and Interrupt Timing	30
12 Serial Host Interface SPI Protocol Timing	34
13 Serial Host Interface (SHI) I2C Protocol Timing	40
14 Programming the Serial Clock	42
15 Enhanced Serial Audio Interface Timing	43
16 Timer Timing	48
17 GPIO Timing	48
18 JTAG Timing	50
19 Watchdog Timer Timing	52
Appendix A Package Information	53
Appendix B IBIS Model	63

© Freescale Semiconductor, Inc., 2004. All rights reserved.

Launched by Motorola
freescale semiconductor

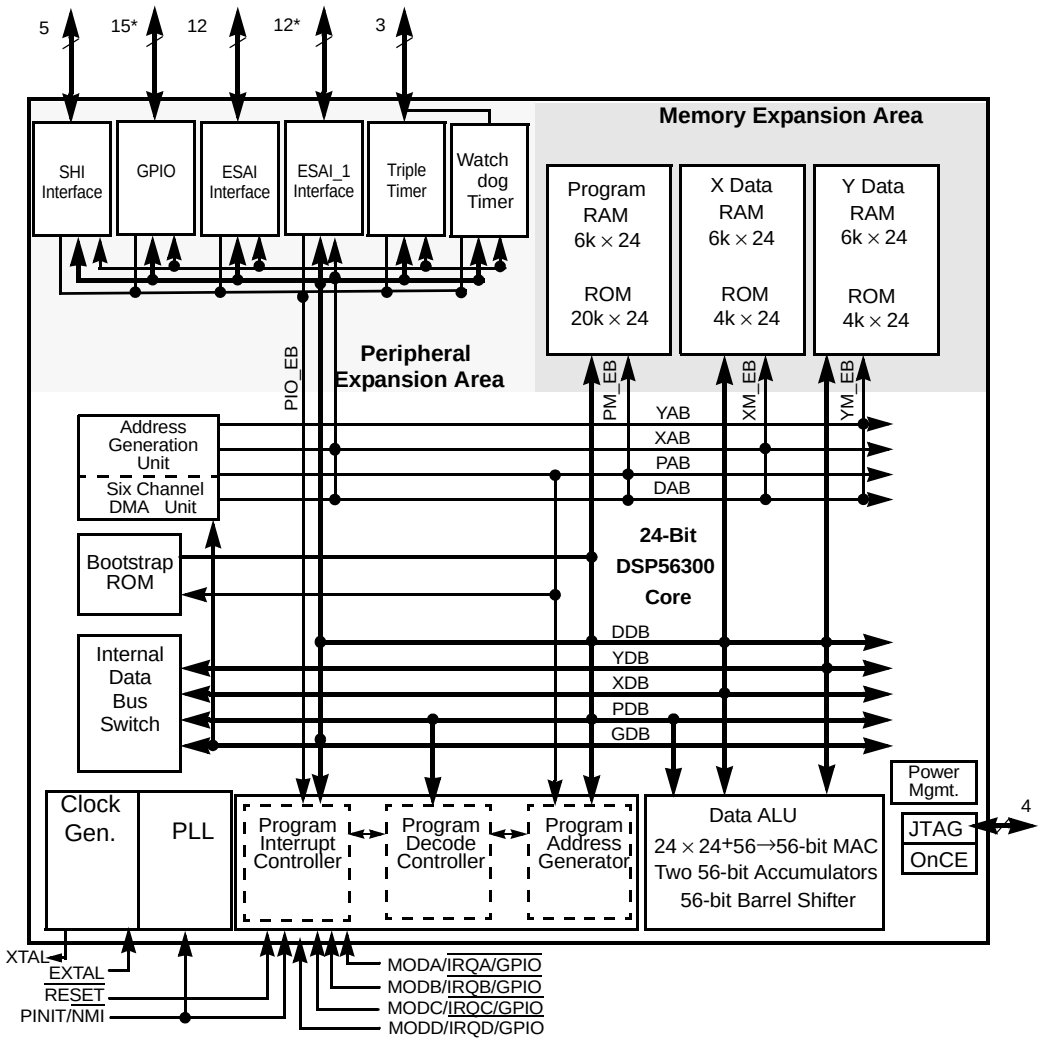

* ESAI_1 and dedicated GPIO pins are not available in the 52-pin package.

Figure 1. **DSP56374 Block Diagram**

1 Features

1.1 DSP56300 Modular Chassis

- 150 Million Instructions Per Second (MIPS) with a 150 MHz clock at an internal logic supply (QVDDL) of 1.25 V.
- Object Code Compatible with the 56K core.
- Data ALU with a 24 x 24 bit multiplier-accumulator and a 56-bit barrel shifter;16 bit arithmatic support.
- Program Control with position independent code support.
- Six-channel DMA controller.
- Provides a wide range of frequency multiplications (1 to 255), predivider factors (1 to 31), PLL feedback multiplier (2 or 4), Output divide factor (1, 2 or 4) and a power-saving clock divider (2^i: i = 0 to 7) to reduce clock noise
- Internal address tracing support and OnCE for Hardware/Software debugging.
- JTAG port, supporting boundary scan, compliant to IEEE 1149.1.
- Very low-power CMOS design, fully static design with operating frequencies down to DC.
- STOP and WAIT low-power standby modes.

1.2 On-chip Memory Configuration

- 6Kx24 Bit Y-Data RAM and 4Kx24 Bit Y-Data ROM.
- 6Kx24 Bit X-Data RAM and 4Kx24 Bit X-Data ROM.
- 20Kx24 Bit Program and Bootstrap ROM including a PROM patching mechanism.
- 6Kx24 Bit Program RAM.
- Various memory switches are available. See memory table below.

Table 1. DSP56374 Memory Switch Configurations

Bit Settings			Memory Sizes (24-bit words)					
MSW1	MSW0	MS	Prog RAM	X Data RAM	Y Data RAM	Prog ROM	X Data ROM	Y Data ROM
X	X	0	6K	6K	6K	20K	4K	4K
0	0	1	2K	10K	6K	20K	4K	4K
0	1	1	4K	8K	6K	20K	4K	4K
1	0	1	8K	4K	6K	20K	4K	4K
1	1	1	10K	4K	4K	20K	4K	4K

1.3 Peripheral modules

- Enhanced Serial Audio Interface (ESAI): up to 4 receiver pins and up to 6 transmitter pins, master or slave. I^2S, Sony, AC97, network and other programmable protocols.
- Enhanced Serial Audio Interface I (ESAI_1): up to 4 receiver pins and up to 6 transmitter pins, master or slave. I^2S, Sony, AC97, network and other programmable protocols. *Note: Available in the 80 pin package only*
- Serial Host Interface (SHI): SPI and I^2C protocols, 10-word receive FIFO, support for 8, 16 and 24-bit words. Three noise reduction filter modes.
- Triple Timer module (TEC).
- Most pins of unused peripherals may be programmed as GPIO pins. Up to 47 pins can be configured as GPIO on the 80 pin package and 20 pins on the 52 pin package.
- Hardware Watchdog Timer

1.4 Packages

- 80-pin and 52-pin plastic LQFP packages.

2 Documentation

Table 2 lists the documents that provide a complete description of the DSP56374 and are required to design properly with the part. Documentation is available from a local Freescale Semiconductor, Inc. (formerly Motorola) distributor, semiconductor sales office, Literature Distribution Center, or through the Freescale DSP home page on the Internet (the source for the latest information).

Table 2. DSP56374 Documentation

Document Name	Description	Order Number
DSP56300 Family Manual	Detailed description of the 56300-family architecture and the 24-bit core processor and instruction set	DSP56300FM/AD
DSP56374 User's Manual	Detailed description of memory, peripherals, and interfaces	DSP56374UM/D
DSP56374 Technical Data Sheet	Electrical and timing specifications; pin and package descriptions	DSP56374
DSP56374 Product Brief	Brief description of the chip	DSP56374PB/D

3 Signal Groupings

The input and output signals of the DSP56374 are organized into functional groups, which are listed in Table 3..

The DSP56374 is operated from a 1.25 V and 3.3 V supply; however, some of the inputs can tolerate 5.0 V. A special notice for this feature is added to the signal descriptions of those inputs.

Table 3. DSP56374 Functional Signal Groupings

Functional Group		Number of Signals[1]	Detailed Description
Power (V_{DD})		11	Table 15.
Ground (GND)		9	Table 5.
Scan Pins		1	Table 6.
Clock and PLL		3	Table 7.
Interrupt and mode control	Port H[2]	5	Table 8.
SHI	Port H[2]	5	Table 9.
ESAI	Port C[4]	12	Table 10.
ESAI_1	Port E[5]	12	Table 11.
Dedicated GPIO	Port G[3]	15	Table 12.
Timer		3	Table 13.
JTAG/OnCE Port		4	Table 14.

Note:
1. Pins are not 5 V. tolerant unless noted.
2. Port H signals are the GPIO port signals which are multiplexed with the MOD and $\overline{\text{HREQ}}$ signals.
3. Port G signals are the dedicated GPIO port signals.
4. Port C signals are the GPIO port signals which are multiplexed with the ESAI signals.
5. Port E signals are the GPIO port signals which are multiplexed with the ESAI_1 signals.

3.1 Power

Table 4. Power Inputs

Power Name	Description
PLLA_VDD (1)	PLL Power— The voltage (3.3 V) should be well-regulated and the input should be provided with an extremely low impedance path to the 3.3 V_{DD} power rail. The user must provide adequate external decoupling capacitors between PLLA_VDD and PLLA_GND. PLLA_VDD requires a filter as shown in Figure 21 and Figure 22 below. See the DSP56374 technical data sheet for additional details.
PLLP_VDD(1)	PLL Power— The voltage (3.3 V) should be well-regulated and the input should be provided with an extremely low impedance path to the 3.3 V_{DD} power rail. The user must provide adequate external decoupling capacitors between PLLP_VDD and PLLP_GND.
PLLD_VDD (1)	PLL Power— The voltage (1.25 V) should be well-regulated and the input should be provided with an extremely low impedance path to the 1.25 V_{DD} power rail. The user must provide adequate external decoupling capacitors between PLLD_VDD and PLLD_GND.
CORE_VDD (4)	Core Power—The voltage (1.25 V) should be well-regulated and the input should be provided with an extremely low impedance path to the 1.25 V_{DD} power rail. The user must provide adequate external decoupling capacitors.
IO_VDD (80-pin 4) (52-pin 3)	SHI, ESAI, ESAI_1, WDT and Timer I/O Power —The voltage (3.3 V) should be well-regulated, and the input should be provided with an extremely low impedance path to the 3.3 V_{DD} power rail. This is an isolated power for the SHI, ESAI, ESAI_1, WDT and Timer I/O. The user must provide adequate external decoupling capacitors.

3.2 Ground

Table 5. Grounds

Ground Name	Description
PLLA_GND(1)	PLL Ground—The PLL ground should be provided with an extremely low-impedance path to ground. This connection must be tied externally to all other chip ground connections. The user must provide adequate external decoupling capacitors between PLLA_VDD and PLLA_GND.
PLLP_GND(1)	PLL Ground—The PLL ground should be provided with an extremely low-impedance path to ground. This connection must be tied externally to all other chip ground connections. The user must provide adequate external decoupling capacitors between PLLP_VDD and PLLP_GND.
PLLD_GND(1)	PLL Ground—The PLL ground should be provided with an extremely low-impedance path to ground. This connection must be tied externally to all other chip ground connections. The user must provide adequate external decoupling capacitors between PLLD_VDD and PLLD_GND.
CORE_GND(4)	Core Ground—The Core ground should be provided with an extremely low-impedance path to ground. This connection must be tied externally to all other chip ground connections. The user must provide adequate external decoupling capacitors.
IO_GND(2)	SHI, ESAI, ESAI_1, WDT and Timer I/O Ground—IO_GND is the ground for the SHI, ESAI, ESAI_1, WDT and Timer I/O. This connection must be tied externally to all other chip ground connections. The user must provide adequate external decoupling capacitors.

3.3 SCAN

Table 6. SCAN signals

Signal Name	Type	State during Reset	Signal Description
SCAN	Input	Input	SCAN—Manufacturing test pin. This pin must be connected to ground.

3.4 Clock and PLL

Table 7. Clock and PLL Signals

Signal Name	Type	State during Reset	Signal Description
EXTAL	Input	Input	External Clock / Crystal Input—An external clock source must be connected to EXTAL in order to supply the clock to the internal clock generator and PLL.
XTAL	Output	Chip Driven	Crystal Output—Connects the internal Crystal Oscillator output to an external crystal. If an external clock is used, leave XTAL unconnected.
PINIT/$\overline{\text{NMI}}$	Input	Input	PLL Initial/Nonmaskable Interrupt—During assertion of $\overline{\text{RESET}}$, the value of PINIT/$\overline{\text{NMI}}$ is written into the PLL Enable (PEN) bit of the PLL control register, determining whether the PLL is enabled or disabled. After $\overline{\text{RESET}}$ de-assertion and during normal instruction processing, the PINIT/$\overline{\text{NMI}}$ Schmitt-trigger input is a negative-edge-triggered nonmaskable interrupt (NMI) request internally synchronized to the internal system clock. This pin has an internal pull up resistor. This input is 5 V tolerant.

3.5 Interrupt and Mode Control

The interrupt and mode control signals select the chip's operating mode as it comes out of hardware reset. After $\overline{\text{RESET}}$ is de-asserted, these inputs are hardware interrupt request lines.

Table 8. Interrupt and Mode Control

Signal Name	Type	State during Reset	Signal Description
MODA/$\overline{\text{IRQA}}$	Input	MODA Input	Mode Select A/External Interrupt Request A—MODA/$\overline{\text{IRQA}}$ is an active-low Schmitt-trigger input, internally synchronized to the DSP clock. MODA/$\overline{\text{IRQA}}$ selects the initial chip operating mode during hardware reset and becomes a level-sensitive or negative-edge-triggered, maskable interrupt request input during normal instruction processing. This pin can also be programmed as GPIO. MODA, MODB, MODC, and MODD select one of 16 initial chip operating modes, latched into the OMR when the $\overline{\text{RESET}}$ signal is de-asserted. If the processor is in the stop standby state and the MODA/$\overline{\text{IRQA}}$ pin is pulled to GND, the processor will exit the stop state. This pin has an internal pull up resistor. This input is 5 V tolerant.

Table 8. Interrupt and Mode Control (Continued)

Signal Name	Type	State during Reset	Signal Description
PH0	Input, output, or disconnected		Port H0—When the MODA/IRQA is configured as GPIO, this signal is individually programmable as input, output, or internally disconnected.
MODB/$\overline{\text{IRQB}}$	Input	MODB Input	Mode Select B/External Interrupt Request B—MODB/$\overline{\text{IRQB}}$ is an active-low Schmitt-trigger input, internally synchronized to the DSP clock. MODB/$\overline{\text{IRQB}}$ selects the initial chip operating mode during hardware reset and becomes a level-sensitive or negative-edge-triggered, maskable interrupt request input during normal instruction processing. This pin can also be programmed as GPIO. MODA, MODB, MODC, and MODD select one of 16 initial chip operating modes, latched into OMR when the $\overline{\text{RESET}}$ signal is de-asserted. This pin has an internal pull up resistor. This input is 5 V tolerant.
PH1	Input, output, or disconnected		Port H1—When the MODB/IRQB is configured as GPIO, this signal is individually programmable as input, output, or internally disconnected.
MODC/$\overline{\text{IRQC}}$	Input	MODC Input	Mode Select C/External Interrupt Request C—MODC/$\overline{\text{IRQC}}$ is an active-low Schmitt-trigger input, internally synchronized to the DSP clock. MODC/$\overline{\text{IRQC}}$ selects the initial chip operating mode during hardware reset and becomes a level-sensitive or negative-edge-triggered, maskable interrupt request input during normal instruction processing. This pin can also be programmed as GPIO. MODA, MODB, MODC, and MODD select one of 16 initial chip operating modes, latched into OMR when the $\overline{\text{RESET}}$ signal is de-asserted. This pin has an internal pull up resistor. This input is 5 V tolerant.
PH2	Input, output, or disconnected		Port H2—When the MODC/IRQC is configured as GPIO, this signal is individually programmable as input, output, or internally disconnected.
MODD/$\overline{\text{IRQD}}$	Input	MODD Input	Mode Select D/External Interrupt Request D—MODD/$\overline{\text{IRQD}}$ is an active-low Schmitt-trigger input, internally synchronized to the DSP clock. MODD/$\overline{\text{IRQD}}$ selects the initial chip operating mode during hardware reset and becomes a level-sensitive or negative-edge-triggered, maskable interrupt request input during normal instruction processing. This pin can also be programmed as GPIO. MODA, MODB, MODC, and MODD select one of 16 initial chip operating modes, latched into OMR when the $\overline{\text{RESET}}$ signal is de-asserted. This pin has an internal pull up resistor. This input is 5 V tolerant.
PH3	Input, output, or disconnected		Port H3—When the MODD/IRQD is configured as GPIO, this signal is individually programmable as input, output, or internally disconnected.

Table 8. Interrupt and Mode Control (Continued)

Signal Name	Type	State during Reset	Signal Description
RESET	Input	Input	Reset—$\overline{\text{RESET}}$ is an active-low, Schmitt-trigger input. When asserted, the chip is placed in the Reset state and the internal phase generator is reset. The Schmitt-trigger input allows a slowly rising input (such as a capacitor charging) to reset the chip reliably. When the $\overline{\text{RESET}}$ signal is de-asserted, the initial chip operating mode is latched from the MODA, MODB, MODC, and MODD inputs. The $\overline{\text{RESET}}$ signal must be asserted during power up. A stable EXTAL signal must be supplied while $\overline{\text{RESET}}$ is being asserted. This pin has an internal pull up resistor. This input is 5 V tolerant.

3.6 Serial Host Interface

The SHI has five I/O signals that can be configured to allow the SHI to operate in either SPI or I^2C mode.

Table 9. Serial Host Interface Signals

Signal Name	Signal Type	State during Reset	Signal Description
SCK	Input or output	Tri-stated	SPI Serial Clock—The SCK signal is an output when the SPI is configured as a master and a Schmitt-trigger input when the SPI is configured as a slave. When the SPI is configured as a master, the SCK signal is derived from the internal SHI clock generator. When the SPI is configured as a slave, the SCK signal is an input, and the clock signal from the external master synchronizes the data transfer. The SCK signal is ignored by the SPI if it is defined as a slave and the slave select ($\overline{\text{SS}}$) signal is not asserted. In both the master and slave SPI devices, data is shifted on one edge of the SCK signal and is sampled on the opposite edge where data is stable. Edge polarity is determined by the SPI transfer protocol.
SCL	Input or output		I^2C Serial Clock—SCL carries the clock for I^2C bus transactions in the I^2C mode. SCL is a Schmitt-trigger input when configured as a slave and an open-drain output when configured as a master. SCL should be connected to V_{DD} through an external pull-up resistor according to the I^2C specifications. This signal is tri-stated during hardware, software, and individual reset. This pin has an internal pull up resistor. This input is 5 V tolerant.

Table 9. Serial Host Interface Signals (Continued)

Signal Name	Signal Type	State during Reset	Signal Description
MISO	Input or output	Tri-stated	SPI Master-In-Slave-Out—When the SPI is configured as a master, MISO is the master data input line. The MISO signal is used in conjunction with the MOSI signal for transmitting and receiving serial data. This signal is a Schmitt-trigger input when configured for the SPI Master mode, an output when configured for the SPI Slave mode, and tri-stated if configured for the SPI Slave mode when $\overline{SS}$ is de-asserted. An external pull-up resistor is not required for SPI operation.
SDA	Input or open-drain output		I^2C Data and Acknowledge—In I^2C mode, SDA is a Schmitt-trigger input when receiving and an open-drain output when transmitting. SDA should be connected to V_{DD} through a pull-up resistor. SDA carries the data for I^2C transactions. The data in SDA must be stable during the high period of SCL. The data in SDA is only allowed to change when SCL is low. When the bus is free, SDA is high. The SDA line is only allowed to change during the time SCL is high in the case of start and stop events. A high-to-low transition of the SDA line while SCL is high is a unique situation, and is defined as the start event. A low-to-high transition of SDA while SCL is high is a unique situation defined as the stop event. This signal is tri-stated during hardware, software, and individual reset. Thus, there is no need for an external pull-up in this state. This pin has an internal pull up resistor. This input is 5 V tolerant.
MOSI	Input or output	Tri-stated	SPI Master-Out-Slave-In—When the SPI is configured as a master, MOSI is the master data output line. The MOSI signal is used in conjunction with the MISO signal for transmitting and receiving serial data. MOSI is the slave data input line when the SPI is configured as a slave. This signal is a Schmitt-trigger input when configured for the SPI Slave mode.
HA0	Input		I^2C Slave Address 0—This signal uses a Schmitt-trigger input when configured for the I^2C mode. When configured for I^2C slave mode, the HA0 signal is used to form the slave device address. HA0 is ignored when configured for the I^2C master mode. This signal is tri-stated during hardware, software, and individual reset. Thus, there is no need for an external pull-up in this state. This pin has an internal pull up resistor. This input is 5 V tolerant.
SS	Input	Ignored Input	SPI Slave Select—This signal is an active low Schmitt-trigger input when configured for the SPI mode. When configured for the SPI Slave mode, this signal is used to enable the SPI slave for transfer. When configured for the SPI master mode, this signal should be kept de-asserted (pulled high). If it is asserted while configured as SPI master, a bus error condition is flagged. If $\overline{SS}$ is de-asserted, the SHI ignores SCK clocks and keeps the MISO output signal in the high-impedance state.
HA2	Input		I^2C Slave Address 2—This signal uses a Schmitt-trigger input when configured for the I^2C mode. When configured for the I^2C Slave mode, the HA2 signal is used to form the slave device address. HA2 is ignored in the I^2C master mode. This pin has an internal pull up resistor. This input is 5 V tolerant.

Table 9. Serial Host Interface Signals (Continued)

Signal Name	Signal Type	State during Reset	Signal Description
HREQ	Input or Output	Tri-stated	Host Request—This signal is an active low Schmitt-trigger input when configured for the master mode but an active low output when configured for the slave mode. When configured for the slave mode, $\overline{\text{HREQ}}$ is asserted to indicate that the SHI is ready for the next data word transfer and de-asserted at the first clock pulse of the new data word transfer. When configured for the master mode, $\overline{\text{HREQ}}$ is an input. When asserted by the external slave device, it will trigger the start of the data word transfer by the master. After finishing the data word transfer, the master will await the next assertion of $\overline{\text{HREQ}}$ to proceed to the next transfer. This pin can also be programmed as GPIO. Port H4—When $\overline{\text{HREQ}}$ is configured as GPIO, this signal is individually programmable as input, output, or internally disconnected. This pin has an internal pull up resistor. This input is 5 V tolerant.
PH4	Input, output, or disconnected		

3.7 Enhanced Serial Audio Interface

Table 10. Enhanced Serial Audio Interface Signals

Signal Name	Signal Type	State during Reset	Signal Description
HCKR	Input or output	GPIO disconnected	High Frequency Clock for Receiver—When programmed as an input, this signal provides a high frequency clock source for the ESAI receiver as an alternate to the DSP core clock. When programmed as an output, this signal can serve as a high-frequency sample clock (e.g., for external digital to analog converters [DACs]) or as an additional system clock.
PC2	Input, output, or disconnected		Port C2—When the ESAI is configured as GPIO, this signal is individually programmable as input, output, or internally disconnected. The default state after reset is GPIO disconnected. This pin has an internal pull up resistor. This input is 5 V tolerant.

Table 10. Enhanced Serial Audio Interface Signals (Continued)

Signal Name	Signal Type	State during Reset	Signal Description
HCKT	Input or output	GPIO disconnected	High Frequency Clock for Transmitter—When programmed as an input, this signal provides a high frequency clock source for the ESAI transmitter as an alternate to the DSP core clock. When programmed as an output, this signal can serve as a high frequency sample clock (e.g., for external DACs) or as an additional system clock.
PC5	Input, output, or disconnected		Port C5—When the ESAI is configured as GPIO, this signal is individually programmable as input, output, or internally disconnected. The default state after reset is GPIO disconnected. This pin has an internal pull up resistor. This input is 5 V tolerant.
FSR	Input or output	GPIO disconnected	Frame Sync for Receiver—This is the receiver frame sync input/output signal. In the asynchronous mode (SYN=0), the FSR pin operates as the frame sync input or output used by all the enabled receivers. In the synchronous mode (SYN=1), it operates as either the serial flag 1 pin (TEBE=0), or as the transmitter external buffer enable control (TEBE=1, RFSD=1). When this pin is configured as serial flag pin, its direction is determined by the RFSD bit in the RCCR register. When configured as the output flag OF1, this pin will reflect the value of the OF1 bit in the SAICR register, and the data in the OF1 bit will show up at the pin synchronized to the frame sync in normal mode or the slot in network mode. When configured as the input flag IF1, the data value at the pin will be stored in the IF1 bit in the SAISR register, synchronized by the frame sync in normal mode or the slot in network mode.
PC1	Input, output, or disconnected		Port C1—When the ESAI is configured as GPIO, this signal is individually programmable as input, output, or internally disconnected. The default state after reset is GPIO disconnected. Internal Pull down resistor. This input is 5 V tolerant.

Table 10. Enhanced Serial Audio Interface Signals (Continued)

Signal Name	Signal Type	State during Reset	Signal Description
FST	Input or output	GPIO disconnected	Frame Sync for Transmitter—This is the transmitter frame sync input/output signal. For synchronous mode, this signal is the frame sync for both transmitters and receivers. For asynchronous mode, FST is the frame sync for the transmitters only. The direction is determined by the transmitter frame sync direction (TFSD) bit in the ESAI transmit clock control register (TCCR).
PC4	Input, output, or disconnected		Port C4—When the ESAI is configured as GPIO, this signal is individually programmable as input, output, or internally disconnected. The default state after reset is GPIO disconnected. Internal Pull down resistor. This input is 5 V tolerant.
SCKR	Input or output	GPIO disconnected	Receiver Serial Clock—SCKR provides the receiver serial bit clock for the ESAI. The SCKR operates as a clock input or output used by all the enabled receivers in the asynchronous mode (SYN=0), or as serial flag 0 pin in the synchronous mode (SYN=1). When this pin is configured as serial flag pin, its direction is determined by the RCKD bit in the RCCR register. When configured as the output flag OF0, this pin will reflect the value of the OF0 bit in the SAICR register, and the data in the OF0 bit will show up at the pin synchronized to the frame sync in normal mode or the slot in network mode. When configured as the input flag IF0, the data value at the pin will be stored in the IF0 bit in the SAISR register, synchronized by the frame sync in normal mode or the slot in network mode.
PC0	Input, output, or disconnected		Port C0—When the ESAI is configured as GPIO, this signal is individually programmable as input, output, or internally disconnected. The default state after reset is GPIO disconnected. Internal Pull down resistor. This input is 5 V tolerant.
SCKT	Input or output	GPIO disconnected	Transmitter Serial Clock—This signal provides the serial bit rate clock for the ESAI. SCKT is a clock input or output used by all enabled transmitters and receivers in synchronous mode, or by all enabled transmitters in asynchronous mode.
PC3	Input, output, or disconnected		Port C3—When the ESAI is configured as GPIO, this signal is individually programmable as input, output, or internally disconnected. The default state after reset is GPIO disconnected. Internal Pull down resistor. This input is 5 V tolerant.

Table 10. Enhanced Serial Audio Interface Signals (Continued)

Signal Name	Signal Type	State during Reset	Signal Description
SDO5	Output	GPIO disconnected	Serial Data Output 5—When programmed as a transmitter, SDO5 is used to transmit data from the TX5 serial transmit shift register.
SDI0	Input		Serial Data Input 0—When programmed as a receiver, SDI0 is used to receive serial data into the RX0 serial receive shift register.
PC6	Input, output, or disconnected		Port C6—When the ESAI is configured as GPIO, this signal is individually programmable as input, output, or internally disconnected. The default state after reset is GPIO disconnected. Internal Pull down resistor. This input is 5 V tolerant.
SDO4	Output	GPIO disconnected	Serial Data Output 4—When programmed as a transmitter, SDO4 is used to transmit data from the TX4 serial transmit shift register.
SDI1	Input		Serial Data Input 1—When programmed as a receiver, SDI1 is used to receive serial data into the RX1 serial receive shift register.
PC7	Input, output, or disconnected		Port C7—When the ESAI is configured as GPIO, this signal is individually programmable as input, output, or internally disconnected. The default state after reset is GPIO disconnected. Internal Pull down resistor. This input is 5 V tolerant.
SDO3	Output	GPIO disconnected	**Serial Data Output 3**—When programmed as a transmitter, SDO3 is used to transmit data from the TX3 serial transmit shift register.
SDI2	Input		**Serial Data Input 2**—When programmed as a receiver, SDI2 is used to receive serial data into the RX2 serial receive shift register.
PC8	Input, output, or disconnected		Port C8—When the ESAI is configured as GPIO, this signal is individually programmable as input, output, or internally disconnected. The default state after reset is GPIO disconnected. Internal Pull down resistor. This input is 5 V tolerant.

Table 10. Enhanced Serial Audio Interface Signals (Continued)

Signal Name	Signal Type	State during Reset	Signal Description
SDO2	Output	GPIO disconnected	Serial Data Output 2—When programmed as a transmitter, SDO2 is used to transmit data from the TX2 serial transmit shift register
SDI3	Input		Serial Data Input 3—When programmed as a receiver, SDI3 is used to receive serial data into the RX3 serial receive shift register.
PC9	Input, output, or disconnected		Port C9—When the ESAI is configured as GPIO, this signal is individually programmable as input, output, or internally disconnected. The default state after reset is GPIO disconnected. Internal Pull down resistor. This input is 5 V tolerant.
SDO1	Output	GPIO disconnected	Serial Data Output 1—SDO1 is used to transmit data from the TX1 serial transmit shift register.
PC10	Input, output, or disconnected		Port C10—When the ESAI is configured as GPIO, this signal is individually programmable as input, output, or internally disconnected. The default state after reset is GPIO disconnected. Internal Pull down resistor. This input is 5 V tolerant.
SDO0	Output	GPIO disconnected	Serial Data Output 0—SDO0 is used to transmit data from the TX0 serial transmit shift register.
PC11	Input, output, or disconnected		Port C11—When the ESAI is configured as GPIO, this signal is individually programmable as input, output, or internally disconnected. The default state after reset is GPIO disconnected. Internal Pull down resistor. This input is 5 V tolerant.

3.8 Enhanced Serial Audio Interface_1

Table 11. Enhanced Serial Audio Interface_1 Signals

Signal Name	Signal Type	State during Reset	Signal Description
HCKR_1	Input or output	GPIO disconnected	High Frequency Clock for Receiver—When programmed as an input, this signal provides a high frequency clock source for the ESAI_1 receiver as an alternate to the DSP core clock. When programmed as an output, this signal can serve as a high-frequency sample clock (e.g., for external digital to analog converters [DACs]) or as an additional system clock.
PE2	Input, output, or disconnected		Port E2—When the ESAI_1 is configured as GPIO, this signal is individually programmable as input, output, or internally disconnected. The default state after reset is GPIO disconnected. Internal Pull down resistor. This input is 5 V tolerant.
HCKT_1	Input or output	GPIO disconnected	High Frequency Clock for Transmitter—When programmed as an input, this signal provides a high frequency clock source for the ESAI_1 transmitter as an alternate to the DSP core clock. When programmed as an output, this signal can serve as a high frequency sample clock (e.g., for external DACs) or as an additional system clock.
PE5	Input, output, or disconnected		Port E5—When the ESAI_1 is configured as GPIO, this signal is individually programmable as input, output, or internally disconnected. The default state after reset is GPIO disconnected. Internal Pull down resistor. This input is 5 V tolerant.

Table 11. Enhanced Serial Audio Interface_1 Signals (Continued)

Signal Name	Signal Type	State during Reset	Signal Description
FSR_1	Input or output	GPIO disconnected	Frame Sync for Receiver_1—This is the receiver frame sync input/output signal. In the asynchronous mode (SYN=0), the FSR_1 pin operates as the frame sync input or output used by all the enabled receivers. In the synchronous mode (SYN=1), it operates as either the serial flag 1 pin (TEBE=0), or as the transmitter external buffer enable control (TEBE=1, RFSD=1). When this pin is configured as serial flag pin, its direction is determined by the RFSD bit in the RCCR_1 register. When configured as the output flag OF1, this pin will reflect the value of the OF1 bit in the SAICR_1 register, and the data in the OF1 bit will show up at the pin synchronized to the frame sync in normal mode or the slot in network mode. When configured as the input flag IF1, the data value at the pin will be stored in the IF1 bit in the SAISR_1 register, synchronized by the frame sync in normal mode or the slot in network mode.
PE1	Input, output, or disconnected		Port E1—When the ESAI_1 is configured as GPIO, this signal is individually programmable as input, output, or internally disconnected. The default state after reset is GPIO disconnected. Internal Pull down resistor. This input is 5 V tolerant
FST_1	Input or output	GPIO disconnected	Frame Sync for Transmitter_1—This is the transmitter frame sync input/output signal. For synchronous mode, this signal is the frame sync for both transmitters and receivers. For asynchronous mode, FST_1 is the frame sync for the transmitters only. The direction is determined by the transmitter frame sync direction (TFSD) bit in the ESAI_1 transmit clock control register (TCCR_1).
PE4	Input, output, or disconnected		Port E4—When the ESAI_1 is configured as GPIO, this signal is individually programmable as input, output, or internally disconnected. The default state after reset is GPIO disconnected. Internal Pull down resistor. This input is 5 V tolerant.

Table 11. Enhanced Serial Audio Interface_1 Signals (Continued)

Signal Name	Signal Type	State during Reset	Signal Description
SCKR_1	Input or output	GPIO disconnected	Receiver Serial Clock_1—SCKR_1 provides the receiver serial bit clock for the ESAI_1. The SCKR_1 operates as a clock input or output used by all the enabled receivers in the asynchronous mode (SYN=0), or as serial flag 0 pin in the synchronous mode (SYN=1). When this pin is configured as serial flag pin, its direction is determined by the RCKD bit in the RCCR_1 register. When configured as the output flag OF0, this pin will reflect the value of the OF0 bit in the SAICR_1 register, and the data in the OF0 bit will show up at the pin synchronized to the frame sync in normal mode or the slot in network mode. When configured as the input flag IF0, the data value at the pin will be stored in the IF0 bit in the SAISR_1 register, synchronized by the frame sync in normal mode or the slot in network mode.
PE0	Input, output, or disconnected		Port E0—When the ESAI_1 is configured as GPIO, this signal is individually programmable as input, output, or internally disconnected. The default state after reset is GPIO disconnected. Internal Pull down resistor. This input is 5 V tolerant
SCKT_1	Input or output	GPIO disconnected	Transmitter Serial Clock_1—This signal provides the serial bit rate clock for the ESAI_1. SCKT_1 is a clock input or output used by all enabled transmitters and receivers in synchronous mode, or by all enabled transmitters in asynchronous mode.
PE3	Input, output, or disconnected		Port E3—When the ESAI_1 is configured as GPIO, this signal is individually programmable as input, output, or internally disconnected. The default state after reset is GPIO disconnected. Internal Pull down resistor. This input is 5 V tolerant

Table 11. Enhanced Serial Audio Interface_1 Signals (Continued)

Signal Name	Signal Type	State during Reset	Signal Description
SDO5_1	Output	GPIO disconnected	Serial Data Output 5_1—When programmed as a transmitter, SDO5_1 is used to transmit data from the TX5 serial transmit shift register.
SDI0_1	Input		Serial Data Input 0_1—When programmed as a receiver, SDI0_1 is used to receive serial data into the RX0 serial receive shift register.
PE6	Input, output, or disconnected		Port E6—When the ESAI_1 is configured as GPIO, this signal is individually programmable as input, output, or internally disconnected. The default state after reset is GPIO disconnected. Internal Pull down resistor. This input is 5 V tolerant
SDO4_1	Output	GPIO disconnected	Serial Data Output 4_1—When programmed as a transmitter, SDO4_1 is used to transmit data from the TX4 serial transmit shift register.
SDI1_1	Input		Serial Data Input 1_1—When programmed as a receiver, SDI1_1 is used to receive serial data into the RX1 serial receive shift register.
PE7	Input, output, or disconnected		Port E7—When the ESAI_1 is configured as GPIO, this signal is individually programmable as input, output, or internally disconnected. The default state after reset is GPIO disconnected. Internal Pull down resistor. This input is 5 V tolerant.
SDO3_1	Output	GPIO disconnected	**Serial Data Output 3**—When programmed as a transmitter, SDO3_1 is used to transmit data from the TX3 serial transmit shift register.
SDI2_1	Input		**Serial Data Input 2**—When programmed as a receiver, SDI2_1 is used to receive serial data into the RX2 serial receive shift register.
PE8	Input, output, or disconnected		Port E8—When the ESAI is configured as GPIO, this signal is individually programmable as input, output, or internally disconnected. The default state after reset is GPIO disconnected. Internal Pull down resistor. This input is 5 V tolerant.

Table 11. Enhanced Serial Audio Interface_1 Signals (Continued)

Signal Name	Signal Type	State during Reset	Signal Description
SDO2_1	Output	GPIO disconnected	Serial Data Output 2—When programmed as a transmitter, SDO2_1 is used to transmit data from the TX2 serial transmit shift register.
SDI3_1	Input		Serial Data Input 3—When programmed as a receiver, SDI3_1 is used to receive serial data into the RX3 serial receive shift register.
PE9	Input, output, or disconnected		Port E9—When the ESAI_1 is configured as GPIO, this signal is individually programmable as input, output, or internally disconnected. The default state after reset is GPIO disconnected. Internal Pull down resistor. This input is 5 V tolerant.
SDO1_1	Output	GPIO disconnected	Serial Data Output 1—SDO1_1 is used to transmit data from the TX1 serial transmit shift register.
PE10	Input, output, or disconnected		Port E10—When the ESAI is configured as GPIO, this signal is individually programmable as input, output, or internally disconnected. The default state after reset is GPIO disconnected. Internal Pull down resistor. This input is 5 V tolerant.
SDO0_1	Output	GPIO disconnected	Serial Data Output 0—SDO0_1 is used to transmit data from the TX0 serial transmit shift register.
PE11	Input, output, or disconnected		Port E11—When the ESAI_1 is configured as GPIO, this signal is individually programmable as input, output, or internally disconnected. The default state after reset is GPIO disconnected. Internal Pull down resistor. This input is 5 V tolerant.

3.9 Dedicated GPIO - Port G

Table 12. Dedicated GPIO - Port G Signals

Signal Name	Type	State During Reset	Signal Description
PG0	Input, output, or disconnected	GPIO disconnected	Port G0—This signal is individually programmable as input, output, or internally disconnected. Internal Pull down resistor. This input is 5 V tolerant

Table 12. Dedicated GPIO - Port G Signals (Continued)

Signal Name	Type	State During Reset	Signal Description
PG1	Input, output, or disconnected	GPIO disconnected	Port G1—This signal is individually programmable as input, output, or internally disconnected. Internal Pull down resistor. This input is 5 V tolerant
PG2	Input, output, or disconnected	GPIO disconnected	Port G2—This signal is individually programmable as input, output, or internally disconnected. Internal Pull down resistor. This input is 5 V tolerant
PG3	Input, output, or disconnected	GPIO disconnected	Port G3—This signal is individually programmable as input, output, or internally disconnected. Internal Pull down resistor. This input is 5 V tolerant
PG4	Input, output, or disconnected	GPIO disconnected	Port G4—This signal is individually programmable as input, output, or internally disconnected. Internal Pull down resistor. This input is 5 V tolerant
PG5	Input, output, or disconnected	GPIO disconnected	Port G5—This signal is individually programmable as input, output, or internally disconnected. Internal Pull down resistor. This input is 5 V tolerant
PG6	Input, output, or disconnected	GPIO disconnected	Port G6—This signal is individually programmable as input, output, or internally disconnected. Internal Pull down resistor. This input is 5 V tolerant
PG7	Input, output, or disconnected	GPIO disconnected	Port G7—This signal is individually programmable as input, output, or internally disconnected. Internal Pull down resistor. This input is 5 V tolerant
PG8	Input, output, or disconnected	GPIO disconnected	Port G8—This signal is individually programmable as input, output, or internally disconnected. Internal Pull down resistor. This input is 5 V tolerant

Table 12. Dedicated GPIO - Port G Signals (Continued)

Signal Name	Type	State During Reset	Signal Description
PG9	Input, output, or disconnected	GPIO disconnected	Port G9—This signal is individually programmable as input, output, or internally disconnected. Internal Pull down resistor. This input is 5 V tolerant
PG10	Input, output, or disconnected	GPIO disconnected	Port G10—This signal is individually programmable as input, output, or internally disconnected. Internal Pull down resistor. This input is 5 V tolerant
PG11	Input, output, or disconnected	GPIO disconnected	Port G11—This signal is individually programmable as input, output, or internally disconnected. Internal Pull down resistor. This input is 5 V tolerant
PG12	Input, output, or disconnected	GPIO disconnected	Port G12—This signal is individually programmable as input, output, or internally disconnected. Internal Pull down resistor. This input is 5 V tolerant
PG13	Input, output, or disconnected	GPIO disconnected	Port G13—This signal is individually programmable as input, output, or internally disconnected. Internal Pull down resistor. This input is 5 V tolerant
PG14	Input, output, or disconnected	GPIO disconnected	Port G14—This signal is individually programmable as input, output, or internally disconnected. Internal Pull down resistor. This input is 5 V tolerant

3.10 Timer

Table 13. Timer Signal

Signal Name	Type	State during Reset	Signal Description
TIO0	Input or Output	GPIO Input	Timer 0 Schmitt-Trigger Input/Output—When timer 0 functions as an external event counter or in measurement mode, TIO0 is used as input. When timer 0 functions in watchdog, timer, or pulse modulation mode, TIO0 is used as output. The default mode after reset is GPIO input. This can be changed to output or configured as a timer input/output through the timer 0 control/status register (TCSR0). If TIO0 is not being used, it is recommended to either define it as GPIO output immediately at the beginning of operation or leave it defined as GPIO input. Internal Pull down resistor. This input is 5 V tolerant
TIO1	Input or Output	Watchdog Timer Output	Timer 1 Schmitt-Trigger Input/Output—When timer 1 functions as an external event counter or in measurement mode, TIO1 is used as input. When timer 1 functions in watchdog, timer, or pulse modulation mode, TIO1 is used as output. The default mode after reset is GPIO input. This can be changed to output or configured as a timer input/output through the timer 1control/status register (TCSR1). If TIO1 is not being used, it is recommended to either define it as GPIO output immediately at the beginning of operation or leave it defined as GPIO input.
WDT	Output		WDT—When this pin is configured as a hardware watchdog timer pin, this signal is asserted low when the hardware watchdog timer counts down to zero. Internal Pull down resistor. This input is 5 V tolerant
TIO2	Input or Output	PLOCK Output	Timer 2 Schmitt-Trigger Input/Output—When timer 2 functions as an external event counter or in measurement mode, TIO2 is used as input. When timer 2 functions in watchdog, timer, or pulse modulation mode, TIO2 is used as output. The default mode after reset is GPIO input. This can be changed to output or configured as a timer input/output through the timer control/status register (TCSR2). If TIO2 is not being used, it is recommended to either define it as GPIO output immediately at the beginning of operation or leave it defined as GPIO input .

Table 13. Timer Signal (Continued)

Signal Name	Type	State during Reset	Signal Description
PLOCK	Output		PLOCK—When this pin is configured as a PLL lock pin, this signal is asserted high when the on-chip PLL enabled and locked and de-asserted when the PLL enabled and unlocked. This pin is also asserted high when the PLL is disabled. Internal Pull down resistor. This input is 5 V tolerant

3.11 JTAG/OnCE Interface

Table 14. JTAG/OnCE Interface

Signal Name	Signal Type	State during Reset	Signal Description
TCK	Input	Input	Test Clock—TCK is a test clock input signal used to synchronize the JTAG test logic. Internal Pull up resistor. This input is 5 V tolerant.
TDI	Input	Input	Test Data Input—TDI is a test data serial input signal used for test instructions and data. TDI is sampled on the rising edge of TCK. Internal Pull up resistor. This input is 5 V tolerant.
TDO	Output	Tri-stated	Test Data Output—TDO is a test data serial output signal used for test instructions and data. TDO is tri-statable and is actively driven in the shift-IR and shift-DR controller states. TDO changes on the falling edge of TCK.
TMS	Input	Input	Test Mode Select—TMS is an input signal used to sequence the test controller's state machine. TMS is sampled on the rising edge of TCK. Internal Pull up resistor. This input is 5 V tolerant.

4 Maximum Ratings

Caution

This device contains circuitry protecting against damage due to high static voltage or electrical fields. However, normal precautions should be taken to avoid exceeding maximum voltage ratings. Reliability of operation is enhanced if unused inputs are pulled to an appropriate logic voltage level (e.g., either GND or V_{DD}). The suggested value for a pullup or pulldown resistor is 10 kΩ.

NOTE

In the calculation of timing requirements, adding a maximum value of one specification to a minimum value of another specification does not yield a reasonable sum. A maximum specification is calculated using a worst case variation of process parameter values in one direction. The minimum specification is calculated using the worst case for the same parameters in the opposite direction. Therefore, a “maximum” value for a specification will never occur in the same device that has a “minimum” value for another specification; adding a maximum to a minimum represents a condition that can never exist.

Table 15. Maximum Ratings

Rating[1]	Symbol	Value[1, 2]	Unit
Supply Voltage	V_{CORE_VDD}, V_{PLLD_VDD}	−0.3 to + 1.6	V
	V_{PLLP_VDD}, V_{IO_VDD}, V_{PLLA_VDD},	−0.3 to + 4.0	V
Maximum CORE_VDD power supply ramp time[4]	Tr	10	ms
All “5.0V tolerant” input voltages	V_{IN}	GND − 0.3 to 6V	V
Current drain per pin excluding V_{DD} and GND(Except for pads listed below)	I	12	mA
SCK_SCL	I_{SCK}	16	mA
TDO	I_{JTAG}	24	ma
Operating temperature range[3]	T_J	80 LQFP = 90 52 LQFP = 95	°C
Storage temperature	T_{STG}	−55 to +125	°C
ESD protected voltage (Human Body Model)		1250	V
ESD protected voltage (Machine Model)		75	V

Note:
1. GND = 0 V, T_J = 0°C to 95°C (52 LQFP) / 0°C to 90°C (80 LQFP), CL = 50pF
2. Absolute maximum ratings are stress ratings only, and functional operation at the maximum is not guaranteed. Stress beyond the maximum rating may affect device reliability or cause permanent damage to the device.
3. Operating temperature qualified for consumer applications. $T_J = T_A + \theta_{JA}$ x Power.
4. If the power supply ramp to full supply time is longer than 10 ms, the POR circuitry will not operate correctly, causing erroneous operation.

5 Power Requirements

To prevent high current conditions due to possible improper sequencing of the power supplies, the connection shown below is recommended to be made between the DSP56374 IO_VDD and Core_VDD power pins.

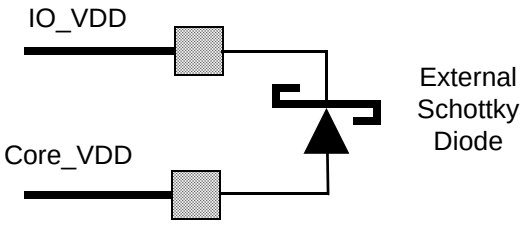

To prevent a high current condition upon power up, the IO_VDD must be applied ahead of the Core_VDD as shown below if the external Schottky is not used.

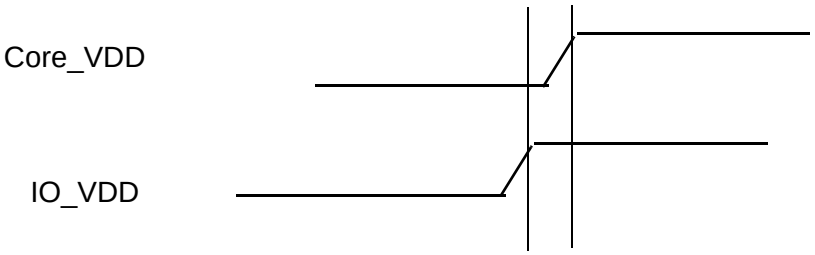

For correct operation of the internal power on reset logic, the Core_VDD ramp rate (Tr) to full supply must be less than 10 ms. This is shown below.

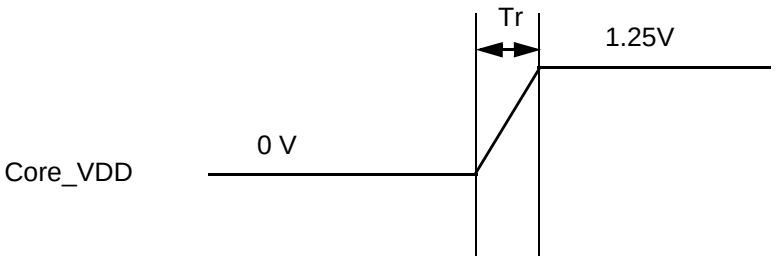

6 Thermal Characteristics

Table 16. Thermal Characteristics

Characteristic	Symbol	LQFP Values	Unit
Natural Convection, Junction-to-ambient thermal resistance[1,2]	$R_{\theta JA}$ or θ_{JA}	68 (52 LQFP) 50 (80 LQFP)	°C/W
Junction-to-case thermal resistance[3]	$R_{\theta JC}$ or θ_{JC}	17 (52 LQFP) 11 (80 LQFP)	°C/W

Note:
1. Junction temperature is a function of die size, on-chip power dissipation, package thermal resistance, mounting site (board) temperature, ambient temperature, air flow, power dissipation of other components on the board, and board thermal resistance.
2. Per SEMI G38-87 and JEDEC JESD51-2 with the single layer board horizontal.
3. Thermal resistance between the die and the case top surface as measured by the cold plate method (MIL SPEC-883 Method 1012.1).

7 DC Electrical Characteristics

Table 17. DC Electrical Characteristics

Characteristics	Symbol	Min	Typ	Max	Unit
Supply voltages • Core (Core_VDD) • PLL (PLLD_VDD)	V_{DD}	1.2	1.25	1.3	V
Supply voltages • VIO_VDD • PLL (PLLP_VDD) • PLL (PLLA_VDD)	V_{DDIO}	3.14	3.3	3.46	V
Input high voltage • All pins	V_{IH}	2.0	—	V_{IO_VDD}+2V	V
Note: All 3.3 volt supplies must rise prior to the rise of the 1.25 volt supplies to avoid a high current condition and possible system damage.					
Input low voltage • All pins	V_{IL}	–0.3	—	0.8	V
Input leakage current	I_{IN}	—	—	± 84	µA
Clock pin Input Capacitance (EXTAL)	C_{IN}		4.7		pF
High impedance (off-state) input current (@ 3.46V)	I_{TSI}	–10	—	84	µA
Output high voltage I_{OH} = -5 mA. XTAL Pin I_{OH} = -10mA	V_{OH}	2.4	—	—	V
Output low voltage I_{OH} = 5 mA. XTAL Pin I_{OH} = 10mA	V_{OL}	—	—	0.4	V

Table 17. DC Electrical Characteristics (Continued)

Characteristics	Symbol	Min	Typ	Max	Unit
Internal supply current[1] (core only) at internal clock of 150MHz					
• In Normal mode	I_{CCI}	—	65	100	mA
• In Wait mode	I_{CCW}	—	16	40	mA
• In Stop mode[2]	I_{CCS}	—	1.2	15	mA
Supply current[1] (I/O only) at internal clock of 150MHz					
• In Normal mode	I_{CCI}	—	35	60	mA
• In Wait mode	I_{CCW}	—	36	50	mA
• In Stop mode[2]	I_{CCS}	—	1.2	20	uA
Input capacitance	C_{IN}	—	—	10	pF

Note:
1. The Current Consumption section provides a formula to compute the estimated current requirements in Normal mode. In order to obtain these results, all inputs must be terminated (i.e., not allowed to float). Measurements are based on synthetic intensive DSP benchmarks. The power consumption numbers in this specification are 90% of the measured results of this benchmark. This reflects typical DSP applications. Typical internal supply current is measured with V_{CORE_VDD} = 1.25V, V_{DD_IO} = 3.3V at T_J = 25°C. Maximum internal supply current is measured with V_{CORE_VDD} = 1.30V, $V_{IO_VDD)}$ = 3.46V at T_J = 115°C.
2. In order to obtain these results, all inputs, which are not disconnected at Stop mode, must be terminated (i.e., not allowed to float).

8 AC Electrical Characteristics

The timing waveforms shown in the AC electrical characteristics section are tested with a V_{IL} maximum of 0.8V and a V_{IH} minimum of 2.0V for all pins. AC timing specifications, which are referenced to a device input signal, are measured in production with respect to the 50% point of the respective input signal's transition. DSP56374 output levels are measured with the production test machine V_{OL} and V_{OH} reference levels set at 1.0V and 1.8V, respectively.

9 Internal Clocks

Table 18. INTERNAL CLOCKS[2]

No.	Characteristics	Symbol	Min	Typ	Max	Unit	Condition
1	Comparison Frequency	Fref	5	—	20	MHz	Fref = FIN/NR
2	Input Clock Frequency	FIN	Fref*NR				NR is input divider value
3	Output clock Frequency (with PLL enabled[1]	FOUT	75	(Ef × MF x FM)/ (PDF × DF x OD)	150	MHz	FOUT=FVCO/NO where NO is output divider value
4	Output clock Frequency (with PLL disabled[1]	FOUT	—	Ef	150	MHz	—
5	Duty Cycle	—	40	50	60	%	FVCO=300MHz~600MHz

Table 18. INTERNAL CLOCKS[2] (Continued)

No.	Characteristics	Symbol	Min	Typ	Max	Unit	Condition
Note: 1. DF = Division Factor Ef = External frequency MF = Multiplication Factor PDF = Predivision Factor FM= Frequency Multiplier OD = Output Divider 2. For details of internal clock operation, see Chapter 5 of Users Guide.							

10 External Clock Operation

The DSP56374 system clock is derived from the on-chip oscillator or is externally supplied. To use the on-chip oscillator, connect a crystal and associated resistor/capacitor components to EXTAL and XTAL; an example is shown below.

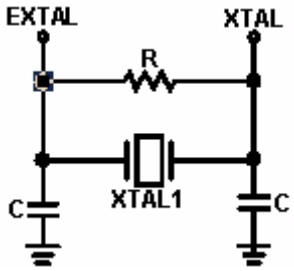

Suggested component values:

f_{osc} = 24.576 MHz
R = 1 M ±10%
C (EXTAL)= 18 pF
C (XTAL) = 47 pF

Calculations are for a 12 - 49 MHz crystal with the following parameters:

- shunt capacitance (C_0) of 10 pF - 12 pF
- series resistance 40 Ohm
- drive level of 10 µW

If the DSP56374 system clock is an externally supplied square wave voltage source, it is connected to EXTAL (Figure 2). When the external square wave source connects to EXTAL, the XTAL pin is not used.

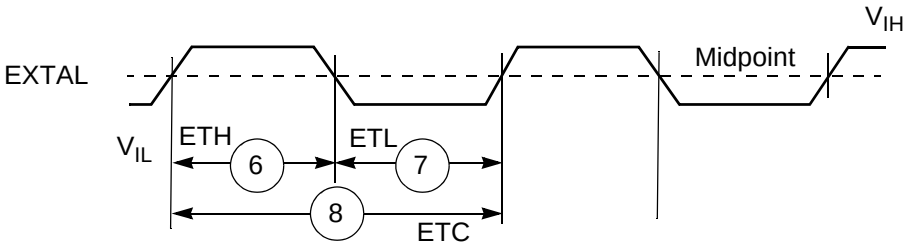

Note: The midpoint is 0.5 (V_{IH} + V_{IL}).

Figure 2. **External Clock Timing**

Table 19. Clock Operation

No.	Characteristics	Symbol	Min	Max	Units
6	EXTAL input high [1] (40% to 60% duty cycle)	Eth	3.33	50	ns
7	EXTAL input low[1] (40% to 60% duty cycle)	Etl	3.33	50	ns
8	EXTAL cycle time • With PLL disabled • With PLL enabled	Etc	 6.67 50	 inf 200	ns

Table 19. Clock Operation (Continued)

No.	Characteristics	Symbol	Min	Max	Units
9	Instruction cycle time= $I_{CYC} = T_C$[4] • With PLL disabled • With PLL enabled	Icyc	6.67 6.67	inf 13.33	ns
Note: 1. Measured at 50% of the input transition. 2. The indicated duty cycle is for the specified maximum frequency for which a part is rated. The minimum clock high or low time required for correct operation, however, remains the same at lower operating frequencies; therefore, when a lower clock frequency is used, the signal symmetry may vary from the specified duty cycle as long as the minimum high time and low time requirements are met.					

11 Reset, Stop, Mode Select, and Interrupt Timing

Table 20. Reset, Stop, Mode Select, and Interrupt Timing

No.	Characteristics	Expression	Min	Max	Unit
10	Delay from $\overline{\text{RESET}}$ assertion to all pins at reset value[3]	—	—	11	ns
11	Required $\overline{\text{RESET}}$ duration[4] • Power on, external clock generator, PLL disabled • Power on, external clock generator, PLL enabled	 2 xT_C 2 x T_C	 13.4 13.4	 — —	 ns ns
13	Syn reset deassert delay time • Minimum • Maximum (PLL enabled)	 2× T_C (2xT_C)+T_{LOCK}	 13.4 5.0	 — —	 ns ms
14	Mode select setup time		10.0	—	ns
15	Mode select hold time		10.0	—	ns
16	Minimum edge-triggered interrupt request assertion width	2 xT_C	13.4	—	ns
17	Minimum edge-triggered interrupt request deassertion width	2 xT_C	13.4	—	ns
18	Delay from interrupt trigger to interrupt code execution	$10 \times T_C + 5$	72	—	ns

Table 20. Reset, Stop, Mode Select, and Interrupt Timing (Continued)

No.	Characteristics	Expression	Min	Max	Unit
19	Duration of level sensitive $\overline{IRQA}$ assertion to ensure interrupt service (when exiting Stop)[1, 2, 3]				
	• PLL is active during Stop and Stop delay is enabled (OMR Bit 6 = 0)	$9+(128\times T_C)$	854	—	µs
	• PLL is active during Stop and Stop delay is not enabled (OMR Bit 6 = 1)	$25\times T_C$	165	—	ns
	• PLL is not active during Stop and Stop delay is enabled (OMR Bit 6 = 0)	$9+(128xT_C) + T_{LOCK}$	5.7		ms
	• PLL is not active during Stop and Stop delay is not enabled (OMR Bit 6 = 1)	$(25 \times T_C) + T_{LOCK}$	5		ms
20	• Delay from $\overline{IRQA}$, $\overline{IRQB}$, $\overline{IRQC}$, $\overline{IRQD}$, $\overline{NMI}$ assertion to general-purpose transfer output valid caused by first interrupt instruction execution[1]	$10 \times T_C + 3.0$		69.0	ns
21	Interrupt Requests Rate[1]				
	• ESAI, ESAI_1, SHI, Timer	$12 \times T_C$	—	80.0	ns
	• DMA	$8 \times T_C$	—	53.0	ns
	• $\overline{IRQ}$, $\overline{NMI}$ (edge trigger)	$8 \times T_C$	—	53.0	ns
	• $\overline{IRQ}$ (level trigger)	$12 \times T_C$	—	80.0	ns
22	DMA Requests Rate				
	• Data read from ESAI, ESAI_1, SHI	$6 \times T_C$	—	40.0	ns
	• Data write to ESAI, ESAI_1, SHI	$7 \times T_C$	—	46.7	ns
	• Timer	$2 \times T_C$	—	13.4	ns
	• $\overline{IRQ}$, $\overline{NMI}$ (edge trigger)	$3 \times T_C$	—	20.0	ns

Note:

1. When using fast interrupts and $\overline{IRQA}$, $\overline{IRQB}$, $\overline{IRQC}$, and $\overline{IRQD}$ are defined as level-sensitive, timings 19 through 21 apply to prevent multiple interrupt service. To avoid these timing restrictions, the Edge-triggered mode is recommended when using fast interrupts. Long interrupts are recommended when using Level-sensitive mode.
2. For PLL disable, using external clock (PCTL Bit 16 = 1), no stabilization delay is required and recovery time will be defined by the OMR Bit 6 settings.

   For PLL enable, (if bet 12 of the PCTL register is 0), the PLL is shutdown during Stop. Recovering from Stop requires the PLL to get locked. The PLL lock procedure duration, PLL Lock Cycles (PLC), may be in the range of 0.5 ms.
3. Periodically sampled and not 100% tested.
4. $\overline{RESET}$ duration is measured during the time in which $\overline{RESET}$ is asserted, V_{DD} is valid, and the EXTAL input is active and valid. When the V_{DD} is valid, but the other “required $\overline{RESET}$ duration” conditions (as specified above) have not been yet met, the device circuitry will be in an uninitialized state that can result in significant power consumption and heat-up. Designs should minimize this state to the shortest possible duration.

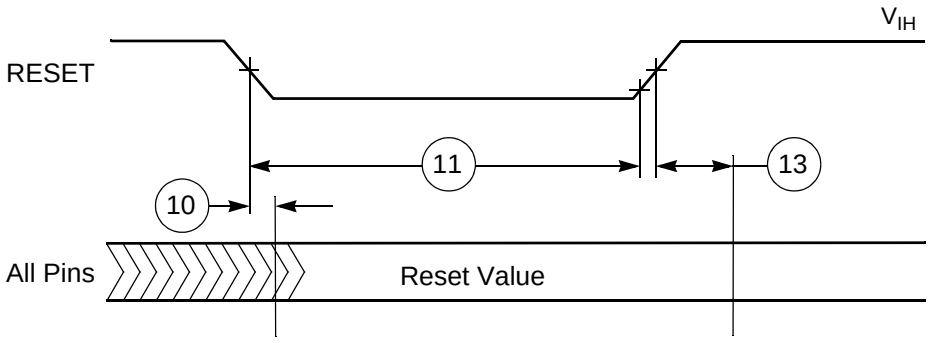

Figure 3. **Reset Timing**

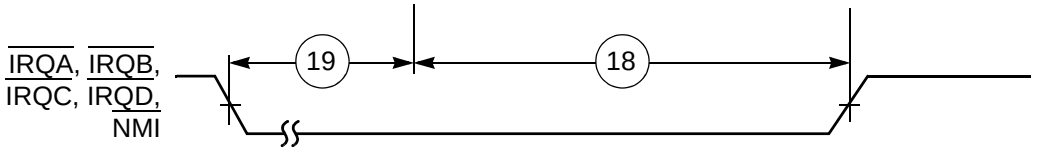

a) First Interrupt Instruction Execution

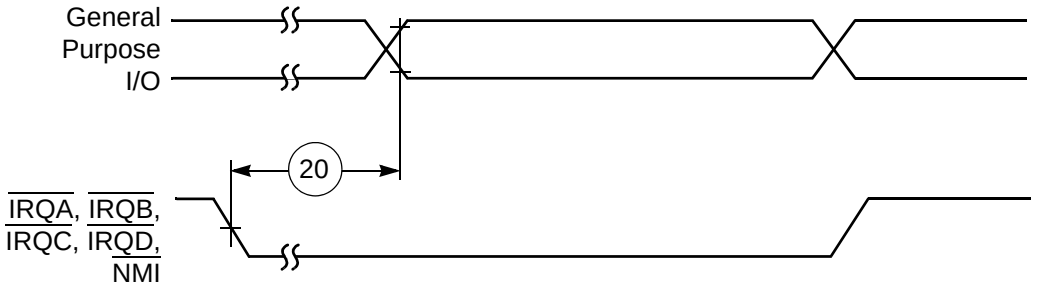

b) General Purpose I/O

Figure 4. **External Fast Interrupt Timing**

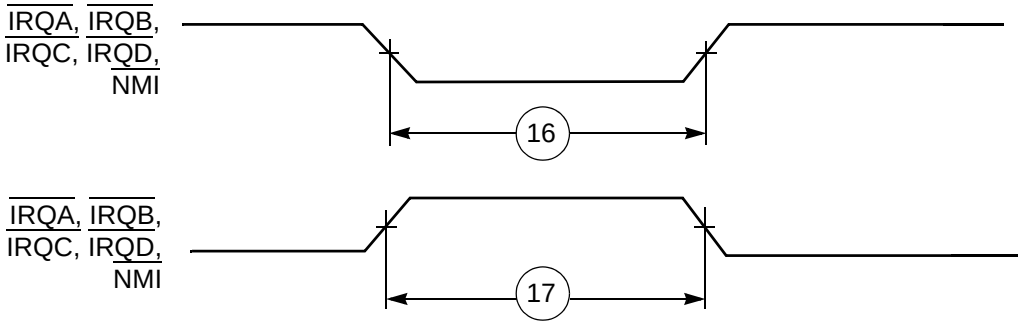

Figure 5. **External Interrupt Timing (Negative Edge-Triggered)**

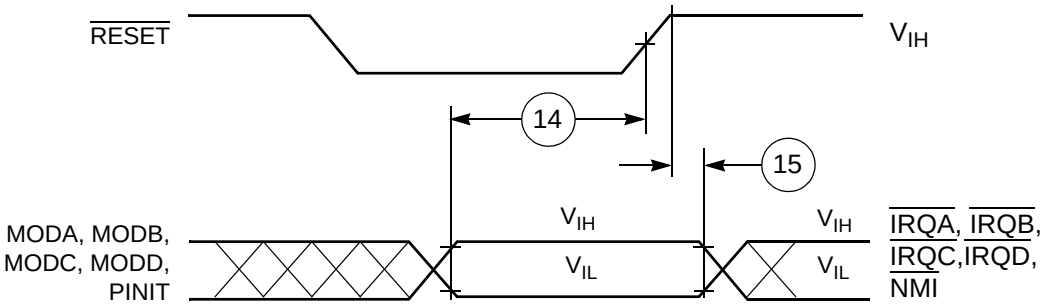

Figure 6. **Recovery from Stop State Using $\overline{\text{IRQA}}$ Interrupt Service**

12 Serial Host Interface SPI Protocol Timing

Table 21. Serial Host Interface SPI Protocol Timing

No.	Characteristics[1,3,4]	Mode	Filter Mode	Min	Max	Unit
23	Minimum serial clock cycle = t_{SPICC}(min)	Master	Bypassed	76.0	—	ns
			Very Narrow	76.0	—	ns
			Narrow	200.0	—	ns
			Wide	400.0	—	ns
XX	Tolerable Spike width on data or clock in.	—	Bypassed	—	0	ns
			Very Narrow	—	10	ns
			Narrow	—	50	ns
			Wide	—	100	ns
24	Serial clock high period	Master	Bypassed	38.0	—	ns
			Very Narrow	38.0	—	ns
			Narrow	100.0	—	ns
			Wide	200.0	—	ns
		Slave	Bypassed	33.0	—	ns
			Very Narrow	33.0	—	ns
			Narrow	100.0	—	ns
			Wide	200.0	—	ns
25	Serial clock low period	Master	Bypassed	38.0	—	ns
			Very Narrow	38.0	—	ns
			Narrow	100.0	—	ns
			Wide	200.0	—	ns
		Slave	Bypassed	33.0	—	ns
			Very Narrow	33.0	—	ns
			Narrow	100.0	—	ns
			Wide	200.0	—	ns
26	Serial clock rise/fall time	Master	—	—	—	ns
		Slave	—	—	5	ns

Table 21. Serial Host Interface SPI Protocol Timing (Continued)

No.	Characteristics[1,3,4]	Mode	Filter Mode	Min	Max	Unit
27	$\overline{SS}$ assertion to first SCK edge	Slave	Bypassed	38.4	—	ns
			Very Narrow	28.4	—	ns
	CPHA = 0		Narrow	0	—	ns
			Wide	0	—	ns
	CPHA = 1	Slave	Bypassed	10	—	ns
			Very Narrow	0	—	ns
			Narrow	0	—	ns
			Wide	0	—	ns
28	Last SCK edge to $\overline{SS}$ not asserted	Slave	Bypassed	12	—	ns
			Very Narrow	22	—	ns
			Narrow	100	—	ns
			Wide	200	—	ns
29	Data input valid to SCK edge (data input set-up time)	Master /Slave	Bypassed	0	—	ns
			Very Narrow	0	—	ns
			Narrow	0	—	ns
			Wide	0	—	ns
30	SCK last sampling edge to data input not valid	Master /Slave	Bypassed	23.2	—	ns
			Very Narrow	43.2	—	ns
			Narrow	73.2	—	ns
			Wide	100.0	—	ns
31	$\overline{SS}$ assertion to data out active	Slave	—	5	—	ns
32	$\overline{SS}$ deassertion to data high impedance[2]	Slave	—	—	9	ns
33	SCK edge to data out valid (data out delay time)	Master /Slave	Bypassed	—	210	ns
			Very Narrow	—	270	ns
			Narrow	—	376	ns
			Wide	—	521	ns
34	SCK edge to data out not valid (data out hold time)	Master /Slave	Bypassed	5	—	ns
			Very Narrow	15	—	ns
			Narrow	55	—	ns
			Wide	105	—	ns
35	$\overline{SS}$ assertion to data out valid (CPHA = 0)	Slave	—	—	15.0	ns

Table 21. Serial Host Interface SPI Protocol Timing (Continued)

No.	Characteristics[1,3,4]	Mode	Filter Mode	Min	Max	Unit
36	First SCK sampling edge to $\overline{\text{HREQ}}$ output deassertion	Slave	Bypassed	50	—	ns
			Very Narrow	60	—	ns
			Narrow	100	—	ns
			Wide	150	—	ns
37	Last SCK sampling edge to $\overline{\text{HREQ}}$ output not deasserted (CPHA = 1)	Slave	Bypassed	57.0	—	ns
			Very Narrow	67.0	—	ns
			Narrow	107.0	—	ns
			Wide	157.0	—	ns
38	$\overline{\text{SS}}$ deassertion to $\overline{\text{HREQ}}$ output not deasserted (CPHA = 0)	Slave	—	50.0	—	ns
39	$\overline{\text{SS}}$ deassertion pulse width (CPHA = 0)	Slave	—	12.7	—	ns
40	$\overline{\text{HREQ}}$ in assertion to first SCK edge	Master	—	63.0	—	ns
41	$\overline{\text{HREQ}}$ in deassertion to last SCK sampling edge ($\overline{\text{HREQ}}$ in set-up time) (CPHA = 1)	Master	—	0	—	ns
42	First SCK edge to $\overline{\text{HREQ}}$ in not asserted ($\overline{\text{HREQ}}$ in hold time)	Master	—	0	—	ns
43	$\overline{\text{HREQ}}$ assertion width	Master	—	20	—	ns

Note:
1. V_{CORE_VDD} = 1.2 5 ± 0.05 V; T_J = 0°C to 95°C (52 LQFP) / 0°C to 90°C (80 LQFP), C_L = 50 pF
2. Periodically sampled, not 100% tested
3. All times assume noise free inputs.
4. All times assume internal clock frequency of 150 MHz.

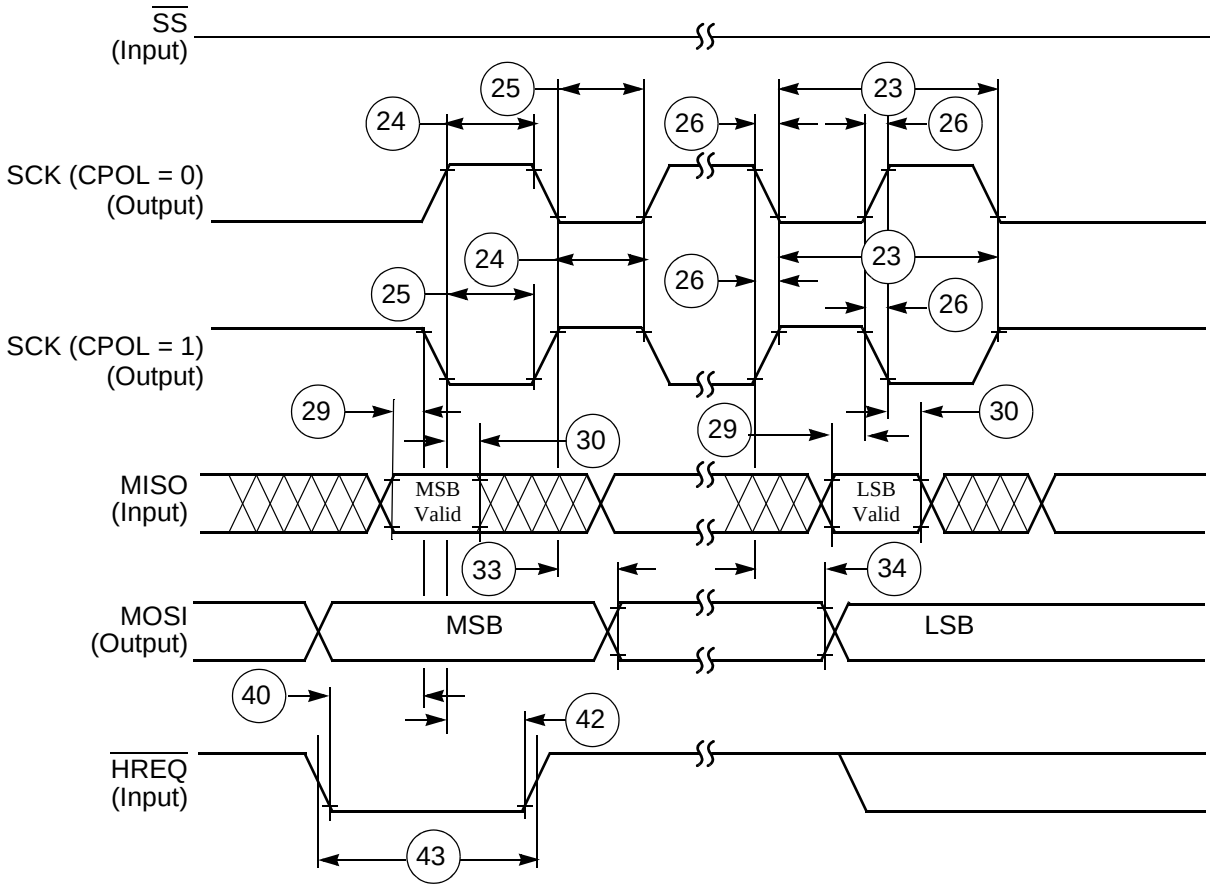

Figure 7. **SPI Master Timing (CPHA = 0)**

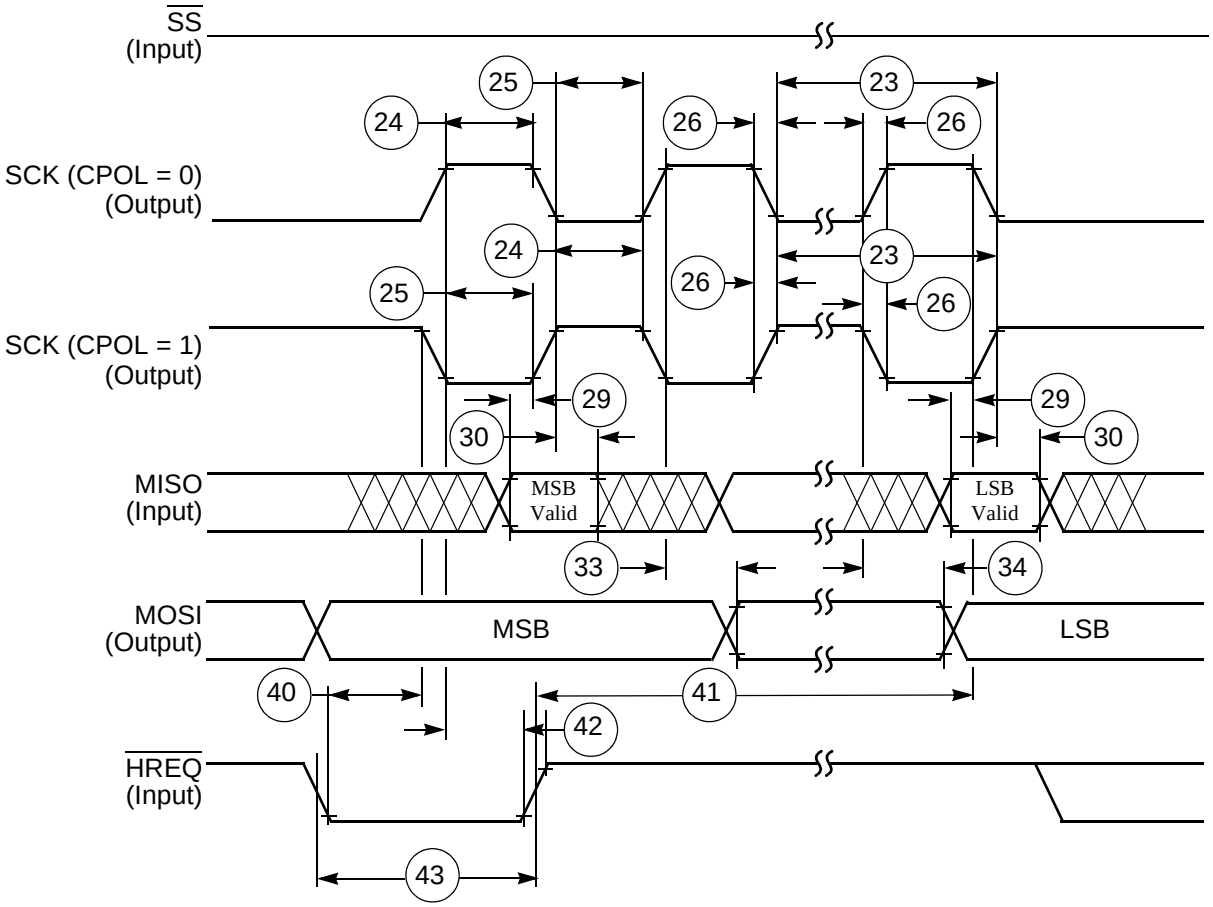

Figure 8. **SPI Master Timing (CPHA = 1)**

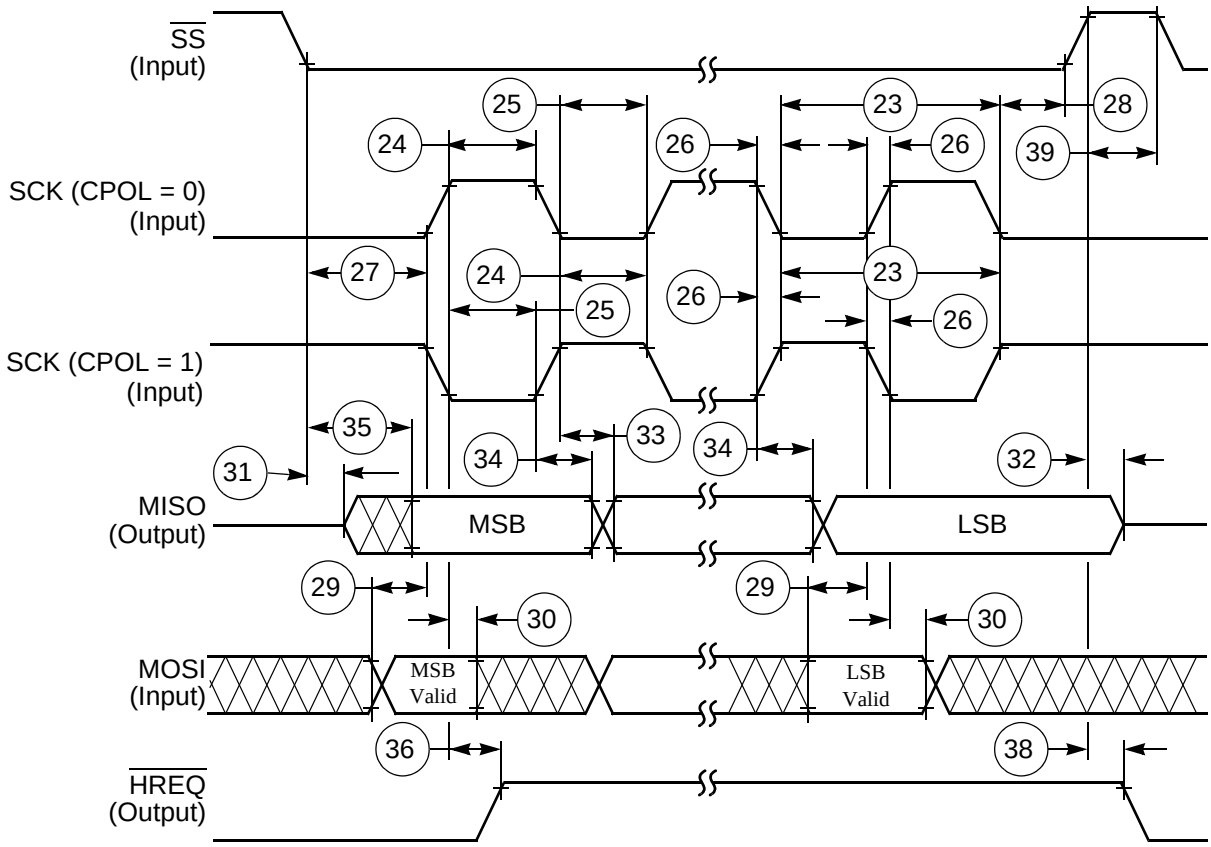

Figure 9. **SPI Slave Timing (CPHA = 0)**

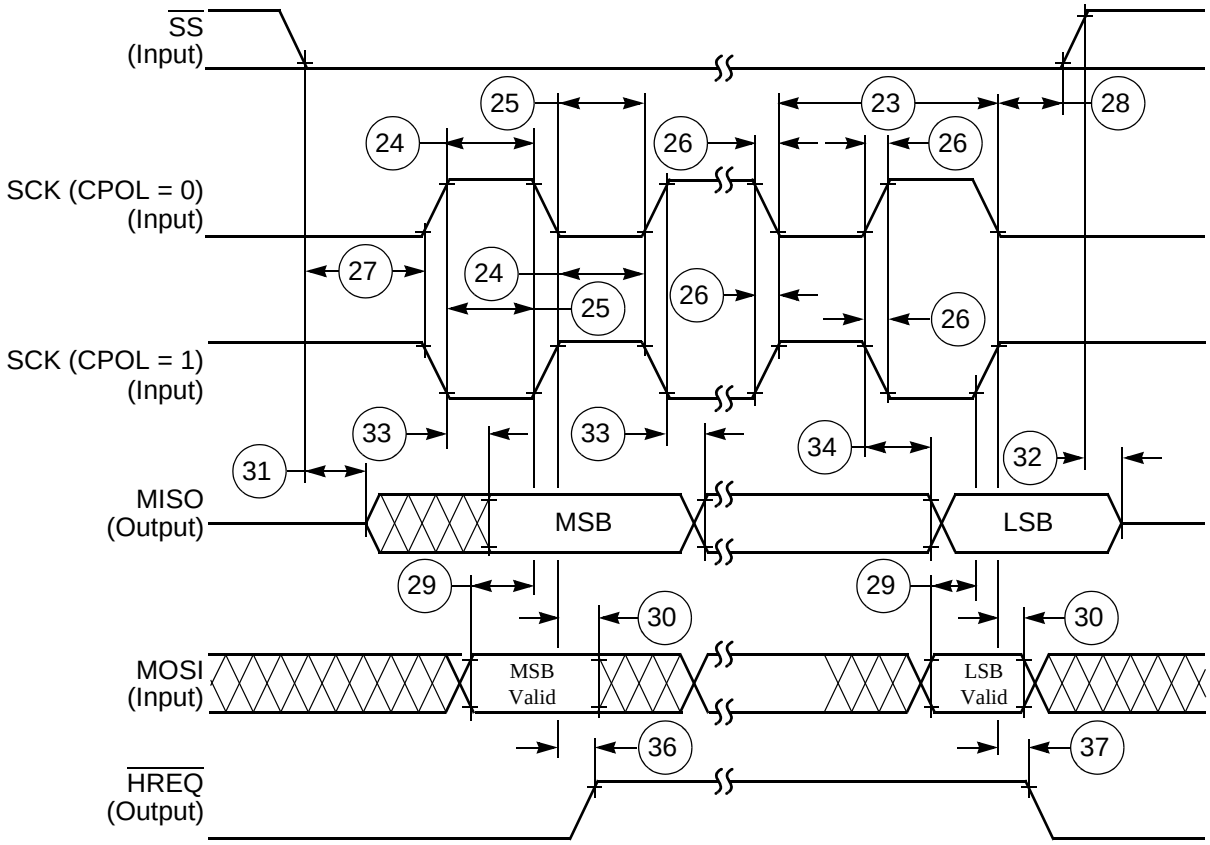

Figure 10. **SPI Slave Timing (CPHA = 1)**

13 Serial Host Interface (SHI) I²C Protocol Timing

Table 22. SHI I²C Protocol Timing

Standard I²C							
No.	**Characteristics**[1,2,3,4,5]	**Symbol/ Expression**	**Standard**		**Fast-Mode**		**Unit**
			Min	**Max**	**Min**	**Max**	
XX	Tolerable Spike Width on SCL or SDA	—					
	Filters Bypassed		—	0	—	0	ns
	Very Narrow Filters enabled		—	10	—	10	ns
	Narrow Filters enabled		—	50	—	50	ns
	Wide Fileters enabled.		—	100	—	100	ns
44	SCL clock frequency	F_{SCL}	—	100	—	400	kHz
44	SCL clock cycle	T_{SCL}	10	—	2.5	—	µs
45	Bus free time	T_{BUF}	4.7	—	1.3	—	µs
46	Start condition set-up time	T_{SUSTA}	4.7	—	0.6	—	µs

Table 22. SHI I²C Protocol Timing (Continued)

Standard I²C							
No.	Characteristics[1,2,3,4,5]	Symbol/ Expression	Standard		Fast-Mode		Unit
			Min	Max	Min	Max	
47	Start condition hold time	$T_{HD;STA}$	4.0	—	0.6	—	µs
48	SCL low period	T_{LOW}	4.7	—	1.3	—	µs
49	SCL high period	T_{HIGH}	4.0	—	1.3	—	µs
50	SCL and SDA rise time	T_R	—	5.0	—	5.0	ns
51	SCL and SDA fall time	T_F	—	5.0	—	5.0	ns
52	Data set-up time	$T_{SU;DAT}$	250	—	100	—	ns
53	Data hold time	$T_{HD;DAT}$	0.0	—	0.0	0.9	µs
54	DSP clock frequency	F_{OSC}					
	• Filters bypassed		10.6	—	28.5	—	MHz
	• Very Narrrow filters enabled		10.6	—	28.5	—	MHz
	• Narrow filters enabled		11.8	—	39.7	—	MHz
	• Wide filters enabled		13.1	—	61.0	—	MHz
55	SCL low to data out valid	$T_{VD;DAT}$	—	3.4	—	0.9	µs
56	Stop condition setup time	$T_{SU;STO}$	4.0	—	0.6	—	µs
57	$\overline{HREQ}$ in deassertion to last SCL edge ($\overline{HREQ}$ in set-up time)	$t_{SU;RQI}$	0.0	—	0.0	—	ns
58	First SCL sampling edge to $\overline{HREQ}$ output deassertion[2]	$T_{NG;RQO}$					
	• Filters bypassed	$4 \times T_C + 30$	—	57.0	—	57.0	ns
	• Very Narrow filters enabled	$4 \times T_C + 50$	—	77.0	—	67.0	ns
	• Narrow filters enabled	$4 \times T_C + 130$	—	157.0	—	157.0	ns
	• Wide filters enabled	$4 \times T_C + 230$	—	257.0	—	257.0	ns
59	Last SCL edge to $\overline{HREQ}$ output not deasserted[2]	$T_{AS;RQO}$					
	• Filters bypassed	$2 \times T_C + 30$	44	—	44	—	ns
	• Very Narrow filters enabled	$2 \times T_C + 40$	54	—	54	—	ns
	• Narrow filters enabled	$2 \times T_C + 80$	94	—	94	—	ns
	• Wide filters enabled	$2 \times T_C + 130$	144	—	144	—	ns
60	$\overline{HREQ}$ in assertion to first SCL edge	$T_{AS;RQI}$					
	• Filters bypassed		4327	—	927	—	ns
	• Very Narrow filters enabled		4317	—	917	—	ns
	• Narrow filters enabled		4282	—	877	—	ns
	• Wide filters enabled		4227	—	827	—	ns
61	First SCL edge to $\overline{HREQ}$ is not asserted ($\overline{HREQ}$ in hold time.)	$t_{HO;RQI}$	0.0	—	0.0	—	ns

Note:
1. V_{CORE_VDD} = 1.2 5 ± 0.05 V; T_J = 0°C to 95°C (52 LQFP) / 0°C to 90°C (80 LQFP), C_L = 50 pF
2. Pull-up resistor: R_P (min) = 1.5 kOhm
3. Capacitive load: C_b (max) = 50 pF
4. All times assume noise free inputs
5. All times assume internal clock frequency of 150MHz

14 Programming the Serial Clock

The programmed serial clock cycle, T_{I^2CCP}, is specified by the value of the HDM[7:0] and HRS bits of the HCKR (SHI clock control register).

The expression for T_{I^2CCP} is

$$T_{I^2CCP} = [T_C \times 2 \times (HDM[7:0] + 1) \times (7 \times (1 - HRS) + 1)]$$

where

— HRS is the prescaler rate select bit. When HRS is cleared, the fixed divide-by-eight prescaler is operational. When HRS is set, the prescaler is bypassed.

— HDM[7:0] are the divider modulus select bits. A divide ratio from 1 to 256 (HDM[7:0] = $00 to $FF) may be selected.

In I²C mode, the user may select a value for the programmed serial clock cycle from

$6 \times T_C$ (if HDM[7:0] = $02 and HRS = 1)

to

$4096 \times T_C$ (if HDM[7:0] = $FF and HRS = 0)

The programmed serial clock cycle (T_{I^2CCP}) should be chosen in order to achieve the desired SCL serial clock cycle (T_{SCL}), as shown in Table 23.

Table 23. SCL Serial Clock Cycle (T_{SCL}) Generated as Master

Nominal	$T_{I^2CCP} + 3 \times T_C + 45ns + T_R$

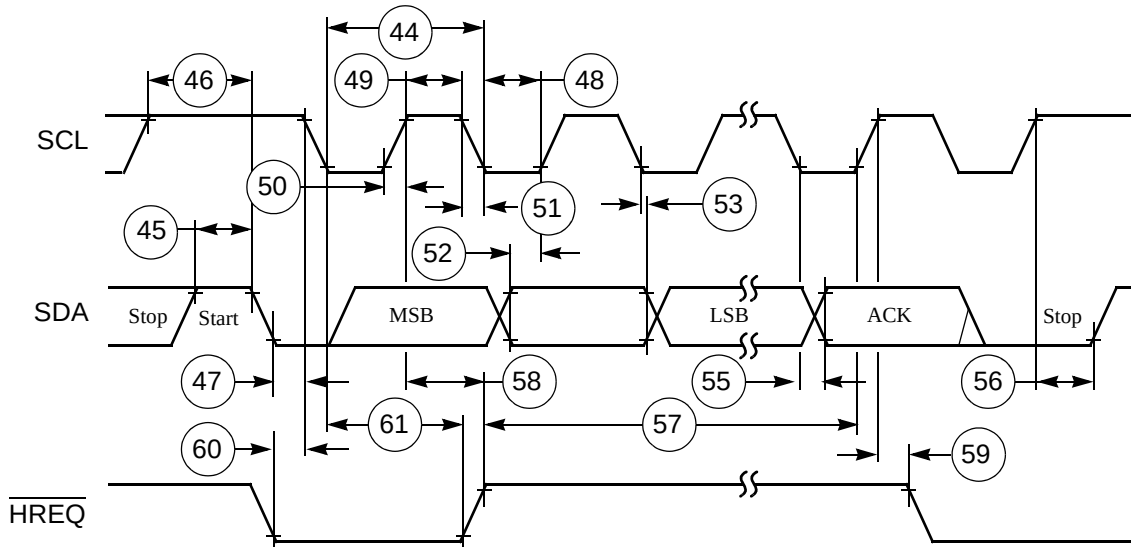

Figure 11. **I²C Timing**

15 Enhanced Serial Audio Interface Timing

Table 24. Enhanced Serial Audio Interface Timing

No.	Characteristics[1, 2, 3]	Symbol	Expression[3]	Min	Max	Condition[4]	Unit
62	Clock cycle[5]	t_{SSICC}	$4 \times T_C$ $4 \times T_C$	26.4 26.4	— —	i ck i ck	ns
63	Clock high period • For internal clock • For external clock	—	 $2 \times T_C - 10.0$ $2 \times T_C$	 3.4 13.4	 — —		ns
64	Clock low period • For internal clock • For external clock	—	 $2 \times T_C - 10.0$ $2 \times T_C$	 3.4 13.4	 — —		ns
65	SCKR rising edge to FSR out (bl) high	—	—	— —	37.0 22.0	x ck i ck a	ns
66	SCKR rising edge to FSR out (bl) low	—	—	— —	37.0 22.0	x ck i ck a	ns
67	SCKR rising edge to FSR out (wr) high[6]	—	—	— —	39.0 24.0	x ck i ck a	ns
68	SCKR rising edge to FSR out (wr) low[6]	—	—	— —	39.0 24.0	x ck i ck a	ns
69	SCKR rising edge to FSR out (wl) high	—	—	— —	36.0 21.0	x ck i ck a	ns
70	SCKR rising edge to FSR out (wl) low	—	—	— —	37.0 22.0	x ck i ck a	ns
71	Data in setup time before SCKR (SCK in synchronous mode) falling edge	—	—	0.0 19.0	— —	x ck i ck	ns
72	Data in hold time after SCKR falling edge	—	—	5.0 3.0	— —	x ck i ck	ns
73	FSR input (bl, wr) high before SCKR falling edge [6]	—	—	23.0 1.0	— —	x ck i ck a	ns
74	FSR input (wl) high before SCKR falling edge	—	—	23.0 1.0	— —	x ck i ck a	ns
75	FSR input hold time after SCKR falling edge	—	—	3.0 0.0	— —	x ck i ck a	ns
76	Flags input setup before SCKR falling edge	—	—	0.0 19.0	— —	x ck i ck s	ns
77	Flags input hold time after SCKR falling edge	—	—	6.0 0.0	— —	x ck i ck s	ns
78	SCKT rising edge to FST out (bl) high	—	—	— —	29.0 15.0	x ck i ck	ns

Table 24. Enhanced Serial Audio Interface Timing (Continued)

No.	Characteristics[1, 2, 3]	Symbol	Expression[3]	Min	Max	Condition[4]	Unit
79	SCKT rising edge to FST out (bl) low	—	—	— —	31.0 17.0	x ck i ck	ns
80	SCKT rising edge to FST out (wr) high[6]	—	—	— —	31.0 17.0	x ck i ck	ns
81	SCKT rising edge to FST out (wr) low[6]	—	—	— —	33.0 19.0	x ck i ck	ns
82	SCKT rising edge to FST out (wl) high	—	—	— —	30.0 16.0	x ck i ck	ns
83	SCKT rising edge to FST out (wl) low	—	—	— —	31.0 17.0	x ck i ck	ns
84	SCKT rising edge to data out enable from high impedance	—	—	— —	31.0 17.0	x ck i ck	ns
85	SCKT rising edge to transmitter #0 drive enable assertion	—	—	— —	34.0 20.0	x ck i ck	ns
86	SCKT rising edge to data out valid	—	—	— —	26.5 21.0	x ck i ck	ns
87	SCKT rising edge to data out high impedance[7]	—	—	— —	31.0 16.0	x ck i ck	ns
88	SCKT rising edge to transmitter #0 drive enable deassertion[7]	—	—	— —	34.0 20.0	x ck i ck	ns
89	FST input (bl, wr) setup time before SCKT falling edge[6]	—	—	2.0 21.0	— —	x ck i ck	ns
90	FST input (wl) setup time before SCKT falling edge	—	—	2.0 21.0	— —	x ck i ck	ns
91	FST input hold time after SCKT falling edge	—	—	4.0 0.0	— —	x ck i ck	ns
92	FST input (wl) to data out enable from high impedance	—	—	—	27.0	—	ns
93	FST input (wl) to transmitter #0 drive enable assertion	—	—	—	31.0	—	ns
94	Flag output valid after SCKT rising edge	—	—	— —	32.0 18.0	x ck i ck	ns
95	HCKR/HCKT clock cycle	—	$2 \times T_C$	13.4	—		ns
96	HCKT input rising edge to SCKT output	—	—	—	18.0		ns
97	HCKR input rising edge to SCKR output	—	—	—	18.0		ns

Table 24. Enhanced Serial Audio Interface Timing (Continued)

No.	Characteristics[1, 2, 3]	Symbol	Expression[3]	Min	Max	Condition[4]	Unit

Note:

1. V_{CORE_VDD} = 1.25 ± 0.05 V; T_J = 0°C to 95°C (52 LQFP) / 0°C to 90°C (80 LQFP), C_L = 50 pF
2. i ck = internal clock
   x ck = external clock
   i ck a = internal clock, asynchronous mode
   (asynchronous implies that SCKT and SCKR are two different clocks)
   i ck s = internal clock, synchronous mode
   (synchronous implies that SCKT and SCKR are the same clock)
3. bl = bit length
   wl = word length
   wr = word length relative
4. SCKT(SCKT pin) = transmit clock
   SCKR(SCKR pin) = receive clock
   FST(FST pin) = transmit frame sync
   FSR(FSR pin) = receive frame sync
   HCKT(HCKT pin) = transmit high frequency clock
   HCKR(HCKR pin) = receive high frequency clock
5. For the internal clock, the external clock cycle is defined by Icyc and the ESAI control register.
6. The word-relative frame sync signal waveform relative to the clock operates in the same manner as the bit-length frame sync signal waveform, but spreads from one serial clock before first bit clock (same as bit length frame sync signal), until the one before last bit clock of the first word in frame.
7. Periodically sampled and not 100% tested.
8. ESAI_1 specs match those of ESAI.

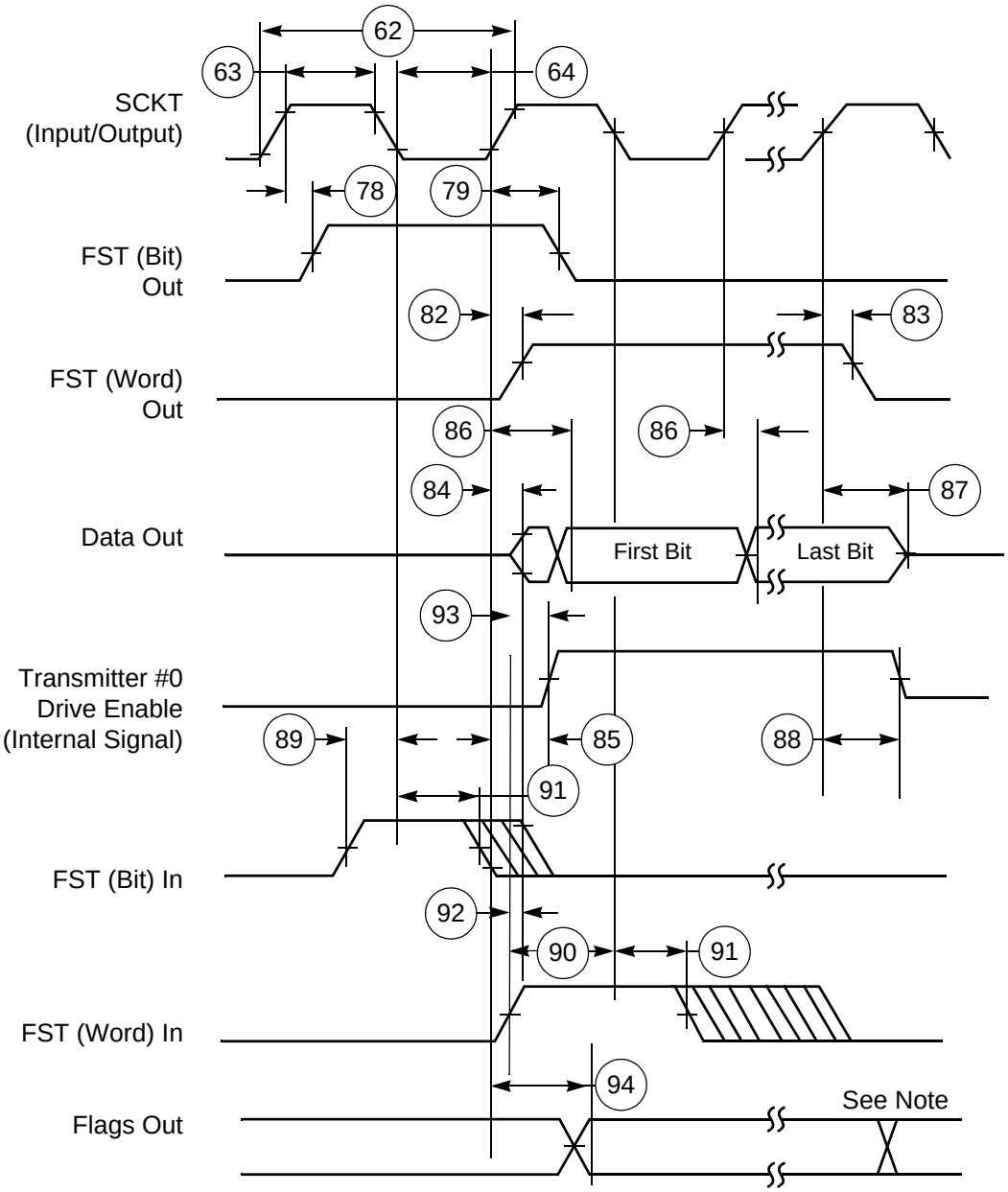

Note: In network mode, output flag transitions can occur at the start of each time slot within the frame. In normal mode, the output flag state is asserted for the entire frame period.

Figure 12. **ESAI Transmitter Timing**

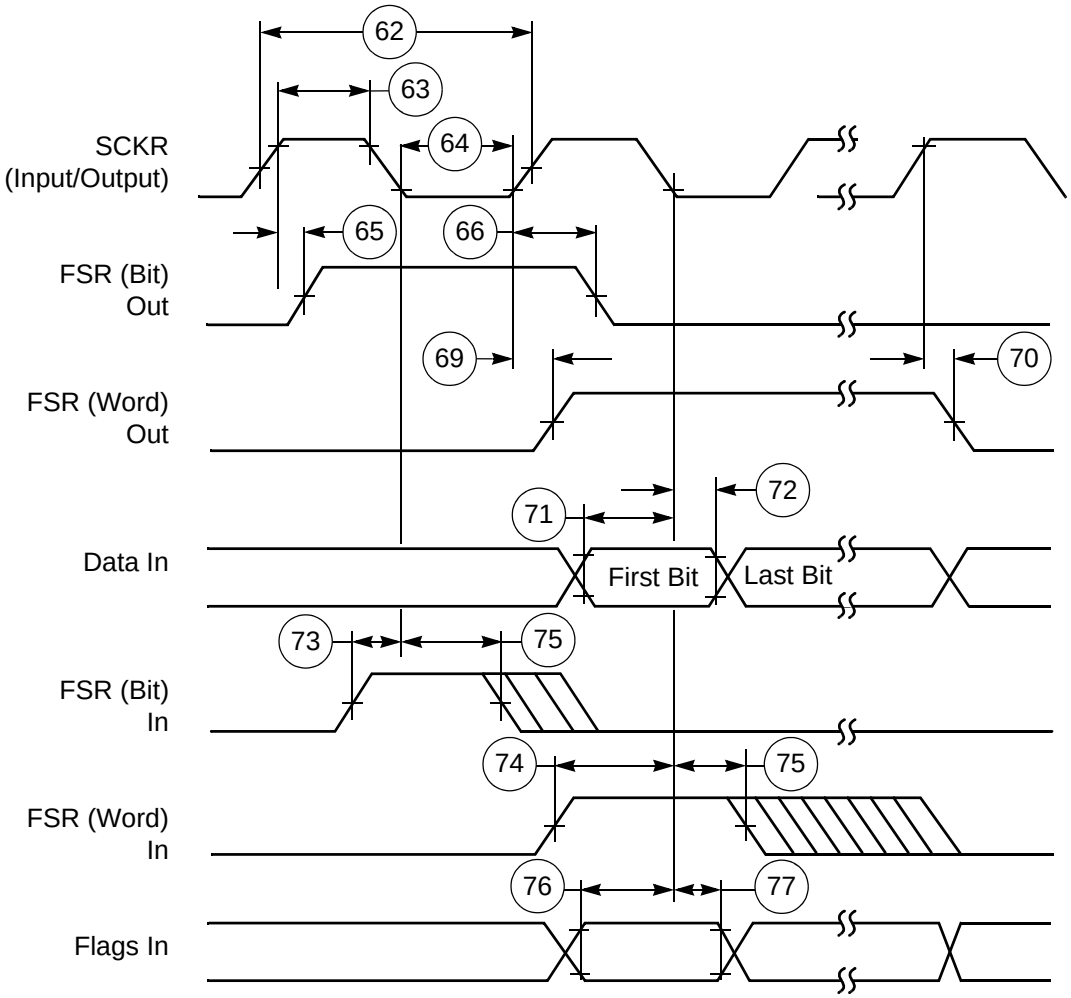

Figure 13. **ESAI Receiver Timing**

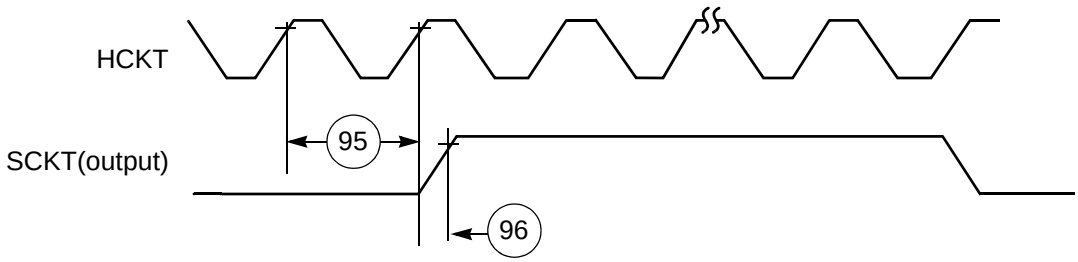

Figure 14. **ESAI HCKT Timing**

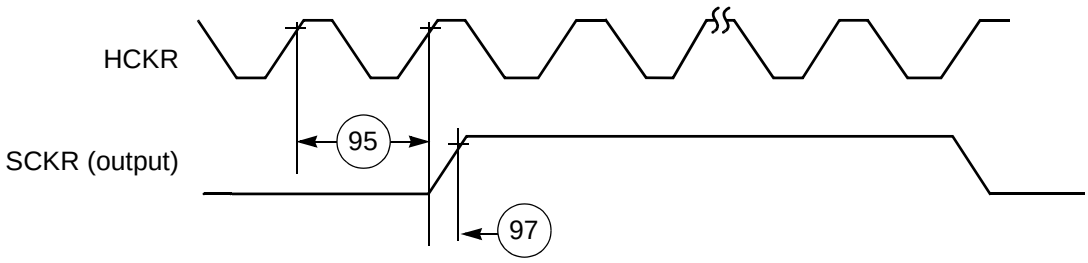

Figure 15. **ESAI HCKR Timing**

16 Timer Timing

Table 25. Timer Timing

No.	Characteristics	Expression	150 MHz		Unit
			Min	Max	
98	TIO Low	$2 \times T_C + 2.0$	15.4	—	ns
99	TIO High	$2 \times T_C + 2.0$	15.4	—	ns
Note: V_{CORE_VDD} = 1.25 V ± 0.05 V; T_J = 0°C to 95°C (52 LQFP) / 0°C to 90°C (80 LQFP), C_L = 50 pF					

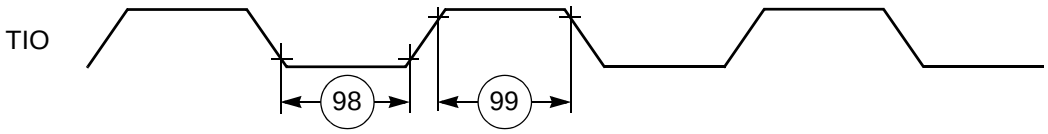

Figure 16. **TIO Timer Event Input Restrictions**

17 GPIO Timing

Table 26. GPIO Timing

No.	Characteristics[1]	Expression	Min	Max	Unit
100	FOSC edge to GPIO out valid (GPIO out delay time)[2]		—	7	ns
101	FOSC edge to GPIO out not valid (GPIO out hold time)[2]		—	7	ns
102	FOSC In valid to EXTAL edge (GPIO in set-up time)[2]		2	—	ns
103	FOSC edge to GPIO in not valid (GPIO in hold time)[2]		0	—	ns
104	Minimum GPIO pulse high width	2 x TC	13.4	—	ns
105	Minimum GPIO pulse low width	2 x TC	13.4	—	ns
106	GPIO out rise time	—	—	13.0	ns
107	GPIO out fall time	—	—	13.0	ns

Note:
1. V_{CORE_VDD} = 1.25 V ± 0.05 V; T_J = -40°C to +115°C, C_L = 50 pF
2. Simulation numbers-subject to change.

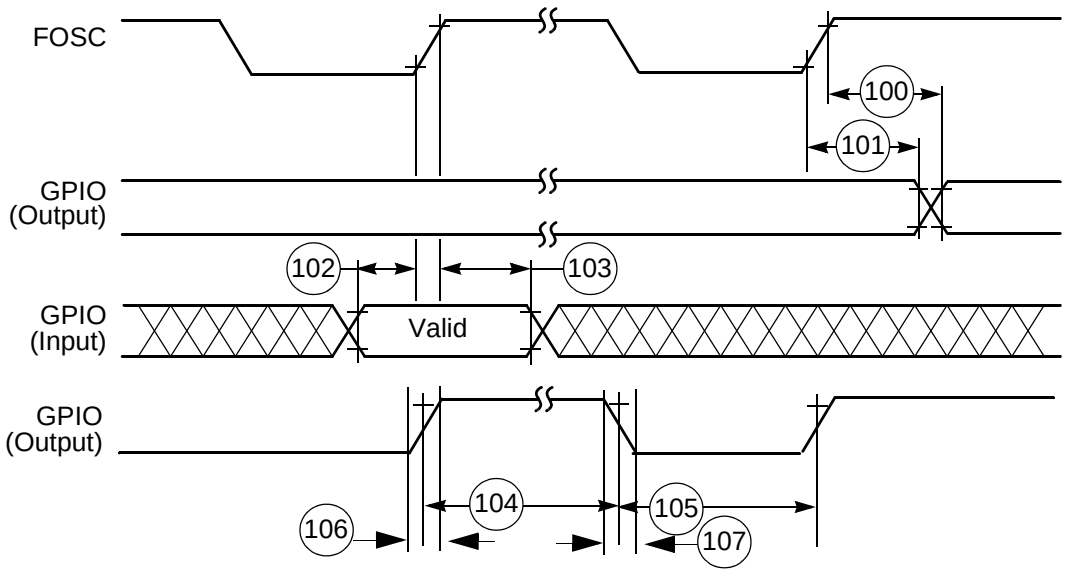

Figure 17. **GPIO Timing**

18 JTAG Timing

Table 27. JTAG Timing

No.	Characteristics	All frequencies		Unit
		Min	Max	
108	TCK frequency of operation (1/($T_C \times 3$); maximum 10 MHz)	—	10.0	MHz
109	TCK cycle time in Crystal mode	100.0	—	ns
110	TCK clock pulse width measured at 1.65 V	50.0	—	ns
111	TCK rise and fall times	—	3.0	ns
112	Boundary scan input data setup time	15.0	—	ns
113	Boundary scan input data hold time	24.0	—	ns
114	TCK low to output data valid	—	40.0	ns
115	TCK low to output high impedance	—	40.0	ns
116	TMS, TDI data setup time	5.0	—	ns
117	TMS, TDI data hold time	25.0	—	ns
118	TCK low to TDO data valid	—	44.0	ns
119	TCK low to TDO high impedance	—	44.0	ns

Note:
1. V_{CORE_VDD} = 1.25 V ± 0.05 V; T_J = -40°C to +95°C, C_L = 50 pF
2. All timings apply to OnCE module data transfers because it uses the JTAG port as an interface.

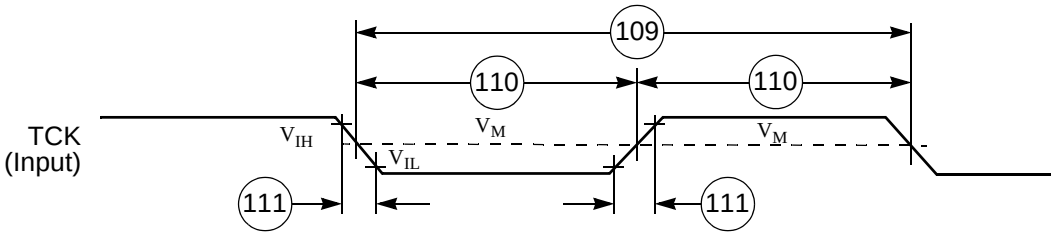

Figure 18. **Test Clock Input Timing Diagram**

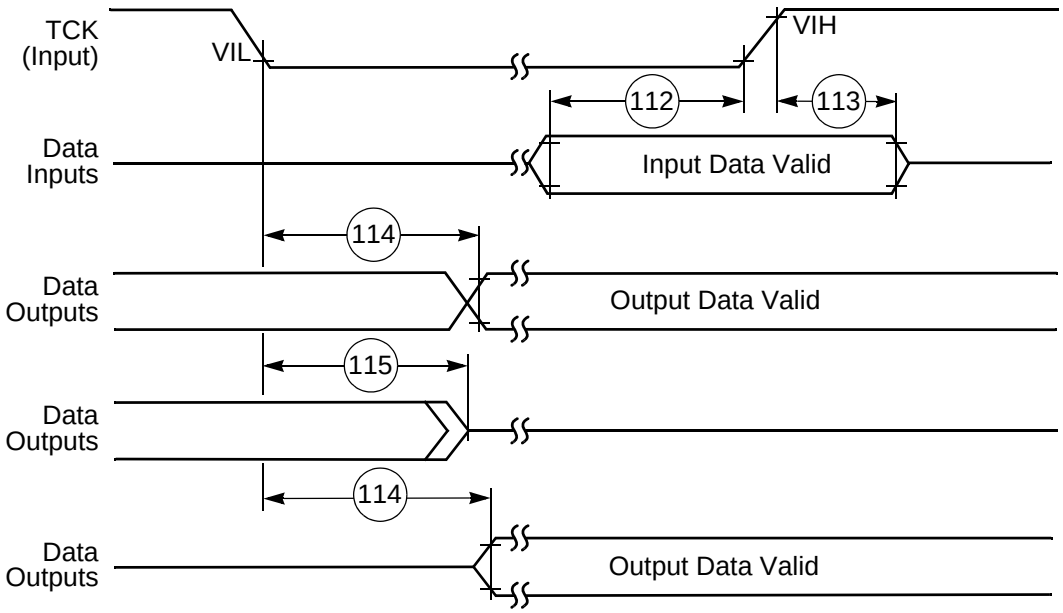

Figure 19. **Debugger Port Timing Diagram**

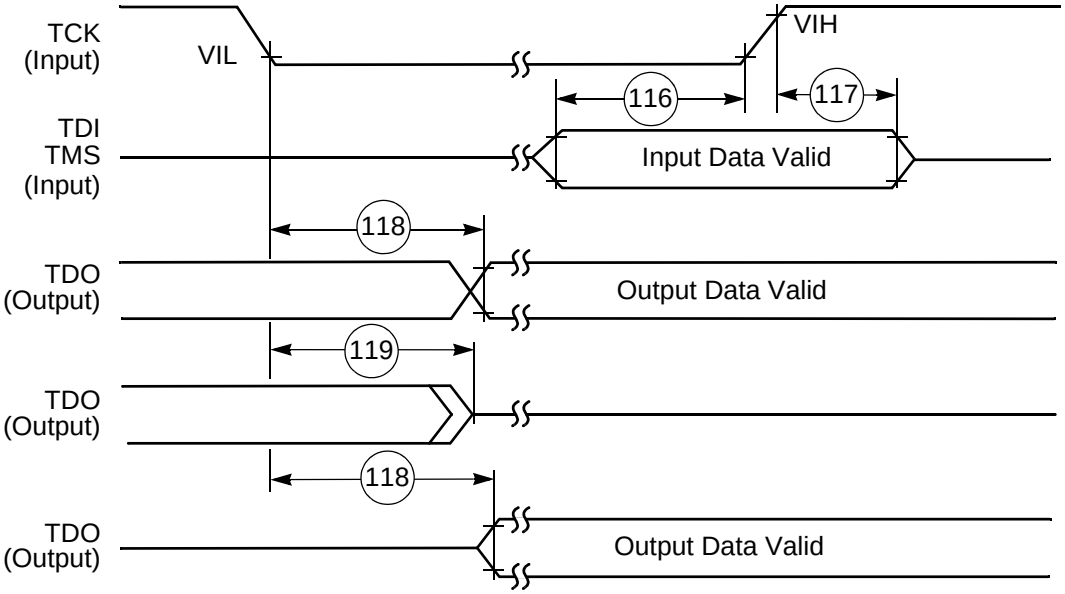

Figure 20. **Test Access Port Timing Diagram**

19 Watchdog Timer Timing

Table 28. Watchdog Timer Timing

No.	Characteristics	Expression	Min	Max	Unit
120	Delay from time-out to fall of TIO1	$2 \times T_C$	13.4	—	ns
121	Delay from timer clear to rise of TIO1	2 x Tc	13.4	—	ns

Appendix A Package Information

DSP56374 Pinout

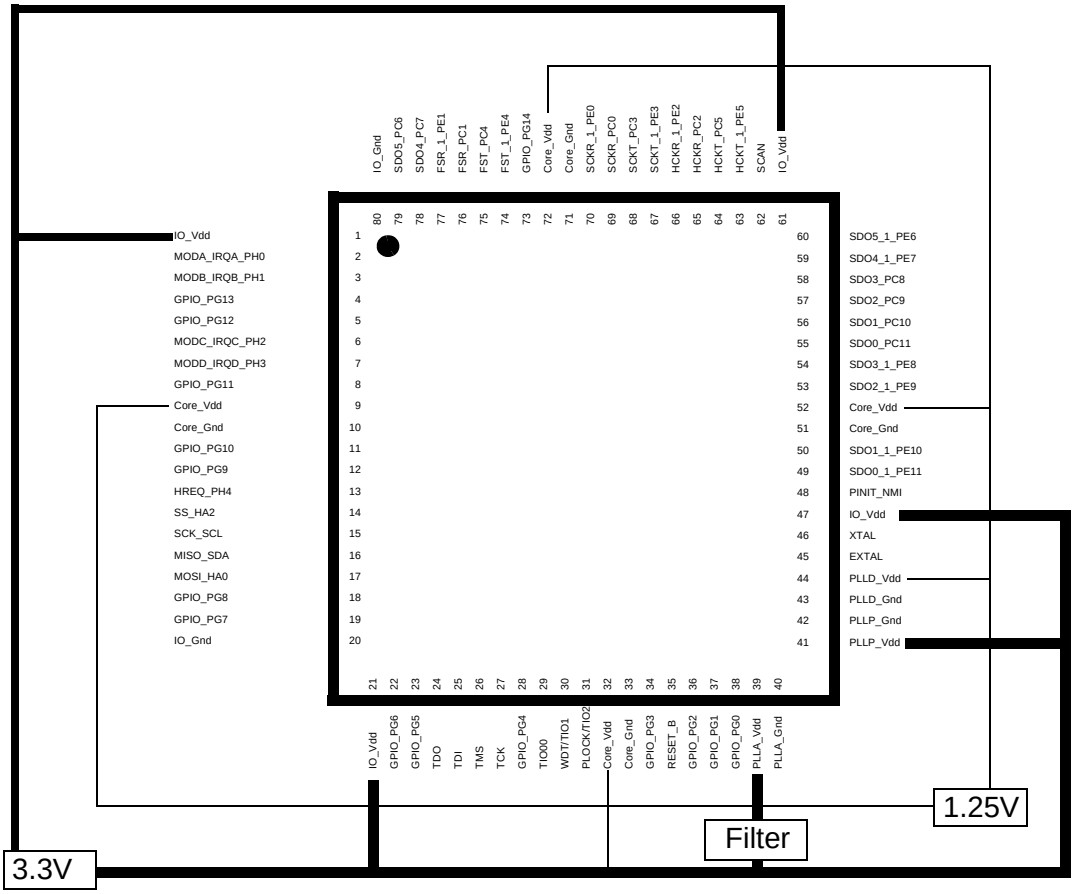

Figure 21. **80-pin Vdd Connections**

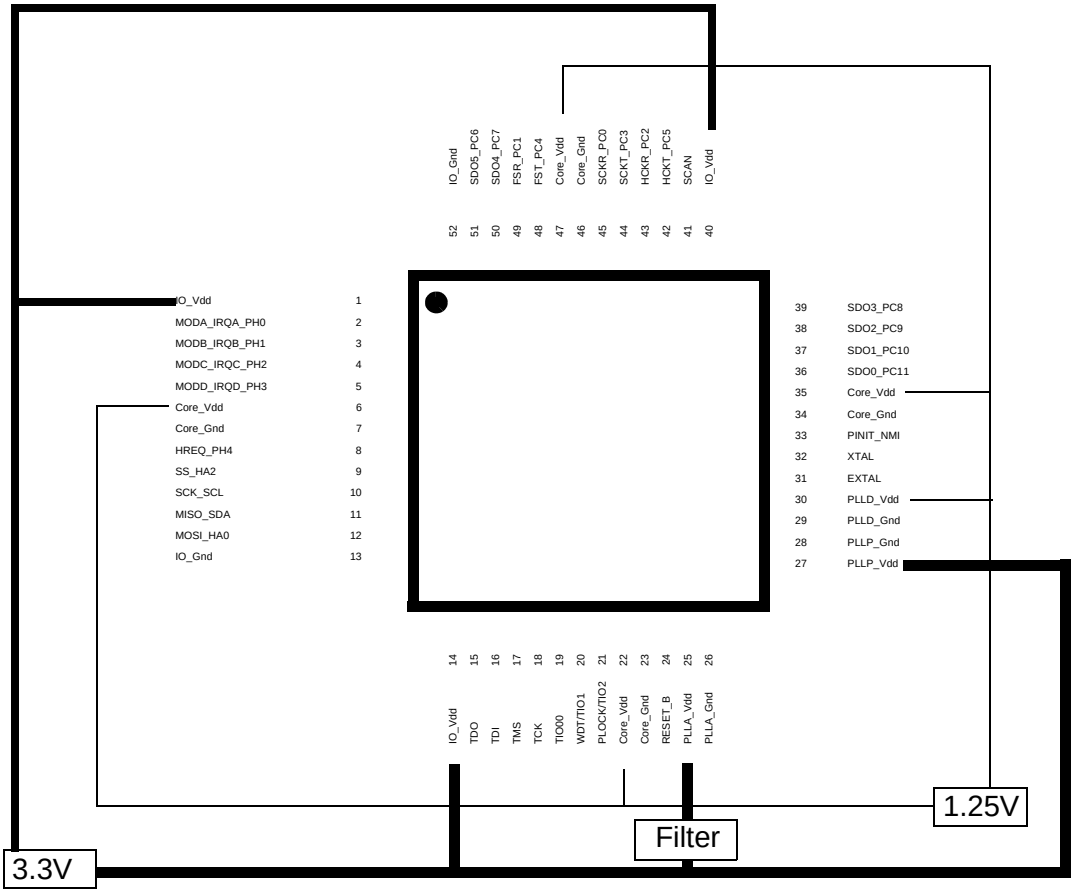

Figure 22. **52-pin Vdd Connections**

19.1 Signal Identification by Pin Number

19.2 Package Information

80 pin package

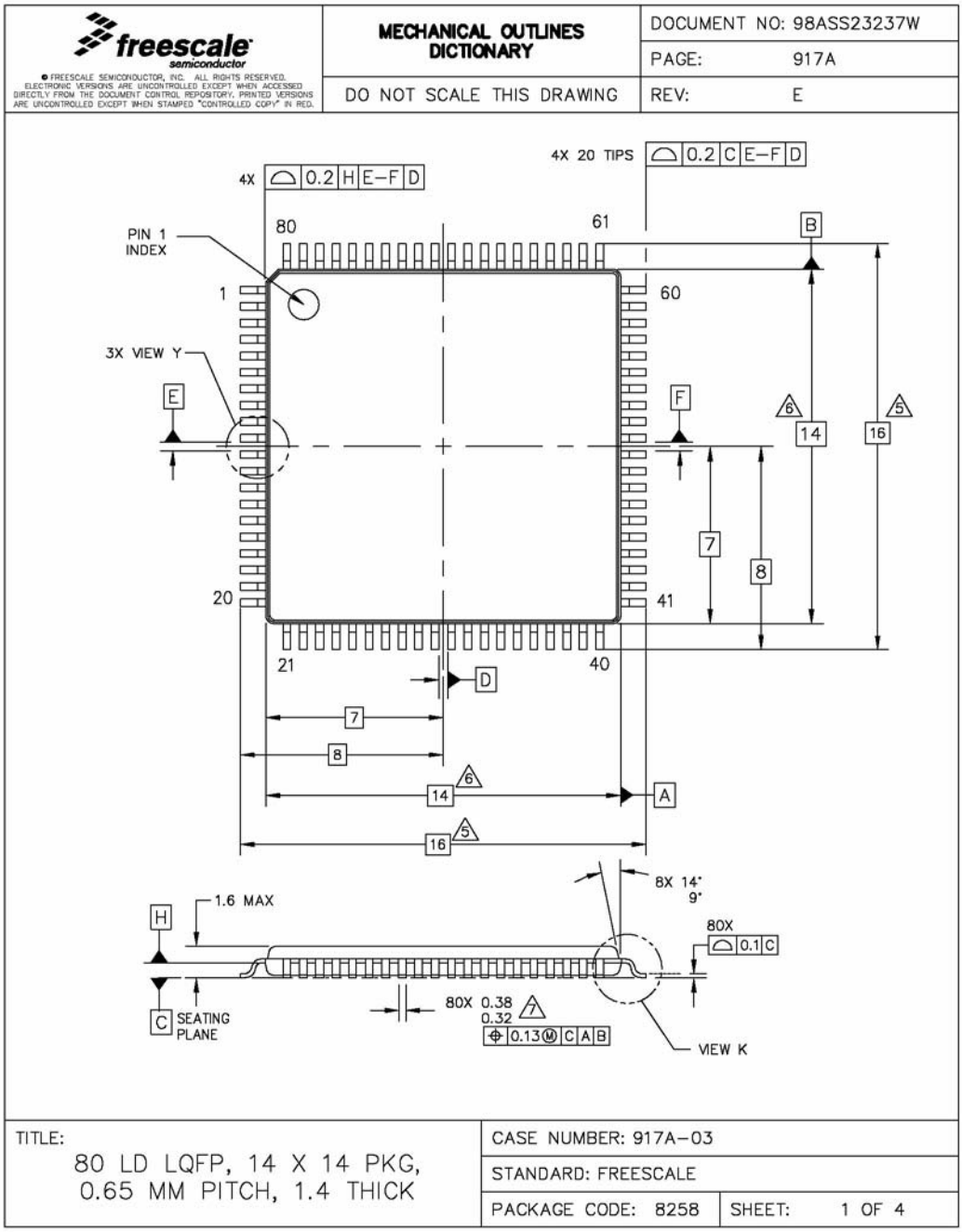

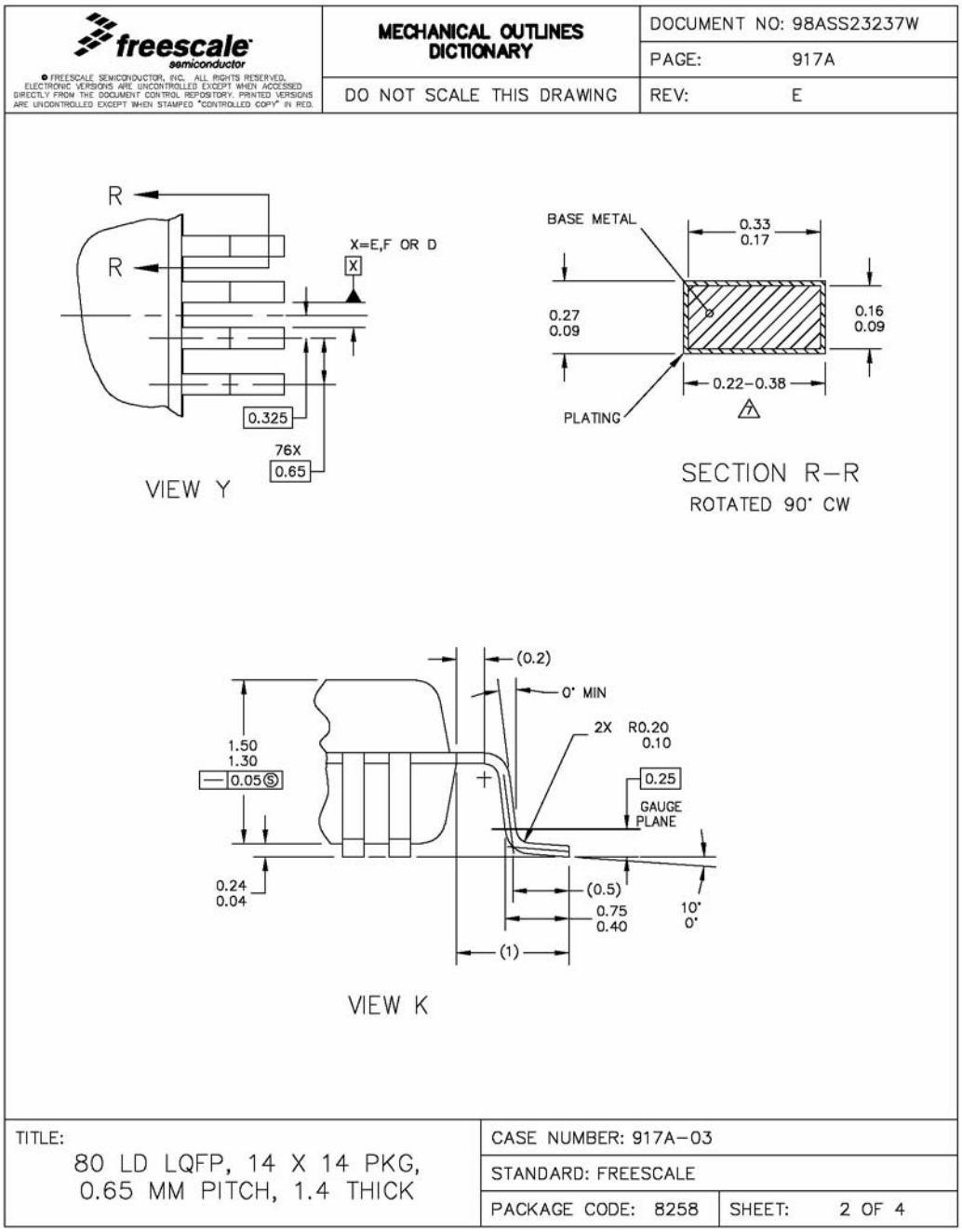
freescale semiconductor
© FREESCALE SEMICONDUCTOR, INC. ALL RIGHTS RESERVED.
ELECTRONIC VERSIONS ARE UNCONTROLLED EXCEPT WHEN ACCESSED DIRECTLY FROM THE DOCUMENT CONTROL REPOSITORY. PRINTED VERSIONS ARE UNCONTROLLED EXCEPT WHEN STAMPED "CONTROLLED COPY" IN RED.
MECHANICAL OUTLINES DICTIONARY
DO NOT SCALE THIS DRAWING
DOCUMENT NO: 98ASS23237W
PAGE: 917A
REV: E
R
R
X=E,F OR D
X
0.325
76X
0.65
VIEW Y
BASE METAL
0.33
0.17
0.27
0.09
0.16
0.09
0.22–0.38
PLATING
7
SECTION R–R
ROTATED 90° CW
(0.2)
0° MIN
2X R0.20
0.10
1.50
1.30
0.05 S
0.25
GAUGE PLANE
0.24
0.04
(0.5)
0.75
0.40
10°
0°
(1)
VIEW K
TITLE:
80 LD LQFP, 14 X 14 PKG,
0.65 MM PITCH, 1.4 THICK
CASE NUMBER: 917A–03
STANDARD: FREESCALE
PACKAGE CODE: 8258
SHEET: 2 OF 4

freescale semiconductor	MECHANICAL OUTLINES DICTIONARY	DOCUMENT NO: 98ASS23237W
		PAGE: 917A
	DO NOT SCALE THIS DRAWING	REV: E

© FREESCALE SEMICONDUCTOR, INC. ALL RIGHTS RESERVED. ELECTRONIC VERSIONS ARE UNCONTROLLED EXCEPT WHEN ACCESSED DIRECTLY FROM THE DOCUMENT CONTROL REPOSITORY. PRINTED VERSIONS ARE UNCONTROLLED EXCEPT WHEN STAMPED "CONTROLLED COPY" IN RED.

NOTES:

1. DIMENSIONING AND TOLERANCING PER ASME Y14.5M–1994.
2. CONTROLLING DIMENSION : MILIMETER.
3. DATUM PLANE H IS LOCATED AT THE BOTTOM OF LEAD AND IS COINCIDENT WITH THE LEAD WHERE THE LEAD EXITS THE PLASTIC BODY AT THE BOTTOM OF THE PARTING LINE.
4. DATUM E, F AND D TO BE DETERMINED AT DATUM PLANE H.
5. DIMENSIONS TO BE DETERMINED AT SEATING PLANE C.
6. DIMENSIONS DO NOT INCLUDE MOLD PROTRUSION. ALLOWABLE PROTRUSION IS 0.25 PER SIDE. DIMENSIONS DO INCLUDE MOLD MISMATCH AND ARE DETERMINED AT DATUM PLANE H.
7. DIMENSION DOES NOT INCLUDE DAMBAR PROTRUSION. DAMBAR PROTRUSION SHALL NOT CAUSE THE LEAD WIDTH TO EXCEED 0.46. MINIMUM SPACE BETWEEN PROTRUSION AND ADJACENT LEAD OR PROTRUSION 0.07.

TITLE:	CASE NUMBER: 917A–03	
80 LD LQFP, 14 X 14 PKG, 0.65 MM PITCH, 1.4 THICK	STANDARD: FREESCALE	
	PACKAGE CODE: 8258	SHEET: 3 OF 4

freescale semiconductor	REVISION HISTORY	DOCUMENT NO: 98ASS23237W
		PAGE: 917A
		REV: E

© FREESCALE SEMICONDUCTOR, INC. ALL RIGHTS RESERVED.
ELECTRONIC VERSIONS ARE UNCONTROLLED EXCEPT WHEN ACCESSED DIRECTLY FROM THE DOCUMENT CONTROL REPOSITORY. PRINTED VERSIONS ARE UNCONTROLLED EXCEPT WHEN STAMPED "CONTROLLED COPY" IN RED.

LTR	ORIGINATOR	REVISIONS	DRAFTER	DATE
0	-----	RELEASED FOR PRODUCTION	-----	-----
A	-----	-----	-----	-----
B	-----	-----	-----	-----
C	-----	-----	-----	-----
D	GARY JOHNSON	REFORMAT DOCUMENT. DELETED DUAL DIMENSIONS (INCH). CHANGED DOCUMENT TITLE FROM TQFP TO LQFP.	AZHAR A.	11 MAR 2004
E	PATRICE L.	UPDATED DRAWINGS PER FREESCALE FORMAT.	KL CHIN	7 OCT 2004

TITLE:	CASE NUMBER: 917A-03	
80 LQFP, 14 X 14 PKG, 0.65 MM PITCH, 1.4 THICK	STANDARD: FREESCALE	
	PACKAGE CODE: 8258	SHEET: 4 OF 4

52 pin package

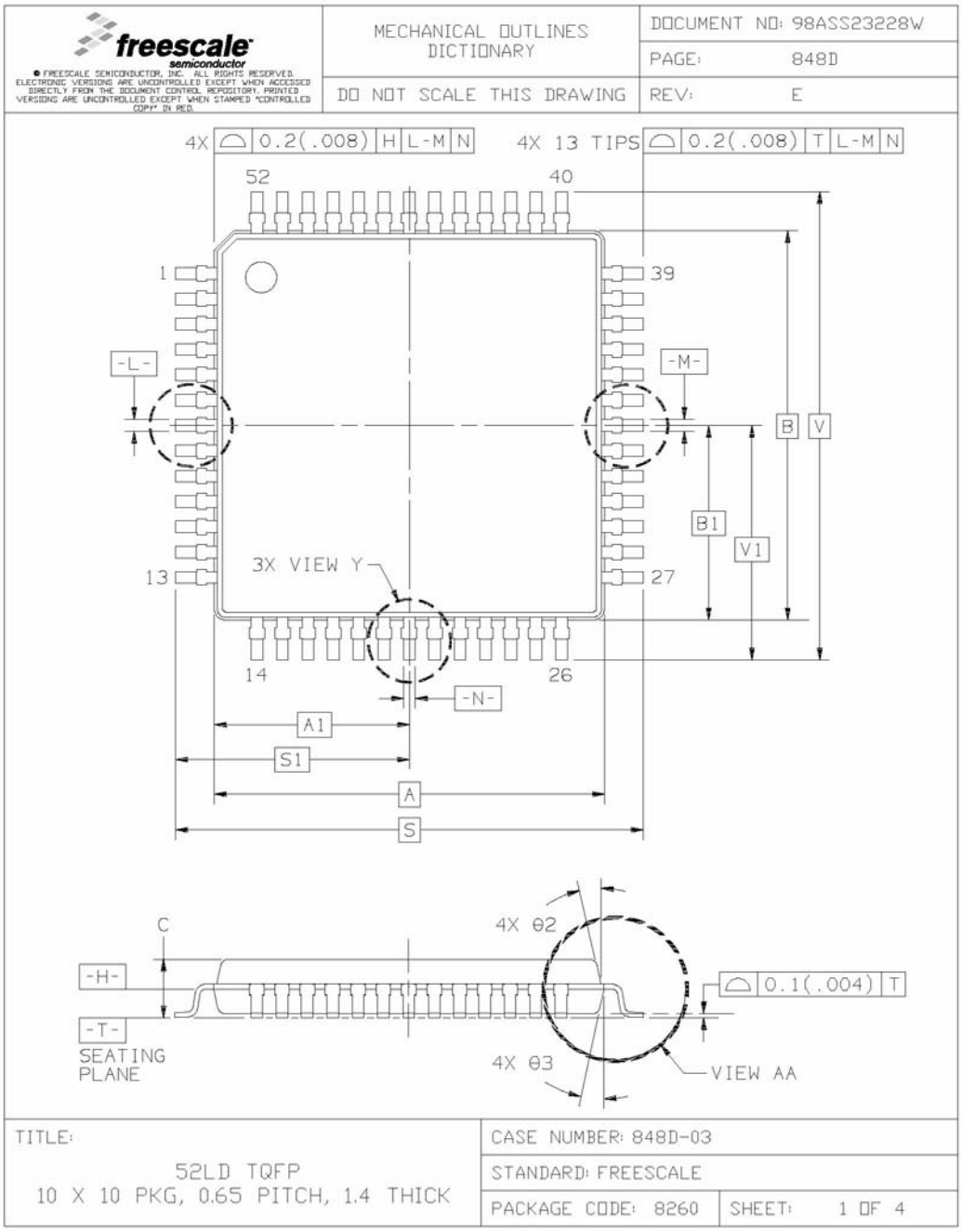

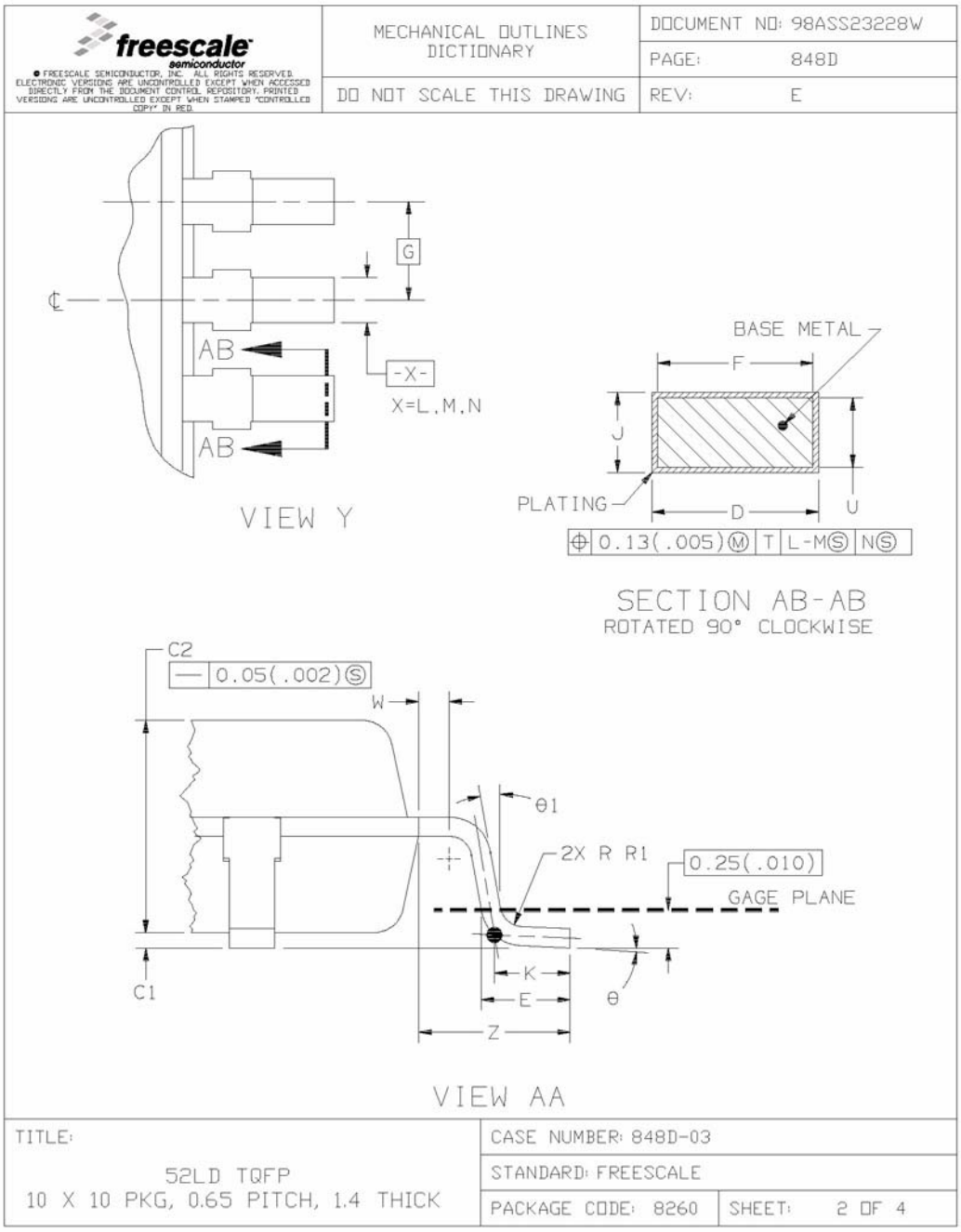
freescale semiconductor
© FREESCALE SEMICONDUCTOR, INC. ALL RIGHTS RESERVED.
ELECTRONIC VERSIONS ARE UNCONTROLLED EXCEPT WHEN ACCESSED DIRECTLY FROM THE DOCUMENT CONTROL REPOSITORY. PRINTED VERSIONS ARE UNCONTROLLED EXCEPT WHEN STAMPED "CONTROLLED COPY" IN RED.
MECHANICAL OUTLINES DICTIONARY
DO NOT SCALE THIS DRAWING
DOCUMENT NO: 98ASS23228W
PAGE: 848D
REV: E
G
AB
AB
-X-
X=L,M,N
VIEW Y
BASE METAL
F
J
U
PLATING
D
0.13(.005)Ⓜ T L-MⓈ NⓈ
SECTION AB-AB
ROTATED 90° CLOCKWISE
C2
0.05(.002)Ⓢ
W
θ1
2X R R1
0.25(.010)
GAGE PLANE
C1
K
E
θ
Z
VIEW AA
TITLE:
52LD TQFP
10 X 10 PKG, 0.65 PITCH, 1.4 THICK
CASE NUMBER: 848D-03
STANDARD: FREESCALE
PACKAGE CODE: 8260
SHEET: 2 OF 4

freescale semiconductor	MECHANICAL OUTLINES DICTIONARY	DOCUMENT NO: 98ASS23228W
		PAGE: 848D
	DO NOT SCALE THIS DRAWING	REV: E

● FREESCALE SEMICONDUCTOR, INC. ALL RIGHTS RESERVED. ELECTRONIC VERSIONS ARE UNCONTROLLED EXCEPT WHEN ACCESSED DIRECTLY FROM THE DOCUMENT CONTROL REPOSITORY. PRINTED VERSIONS ARE UNCONTROLLED EXCEPT WHEN STAMPED "CONTROLLED COPY" IN RED.

NOTES

1. DIMENSIONS AND TOLERANCING PER ANSI Y14.5M, 1982.
2. CONTROLLING DIMENSION: MILLIMETER.
3. DATUM PLANE -H- IS LOCATED AT BOTTOM OF LEAD AND IS COINCIDENT WITH THE LEAD WHERE THE LEAD EXITS THE PLASTIC BODY AT THE BOTTOM OF THE PARTING LINE.
4. DATUMS -L-, -M- AND -N- TO BE DETERMINED AT DATUM PLANE -H-.
5. DIMENSIONS S AND V TO BE DETERMINED AT SEATING PLANE -T-.
6. DIMENSIONS A AND B DO NOT INCLUDE MOLD PROTRUSION. ALLOWABLE PROTRUSION IS 0.25(.010) PER SIDE. DIMENSIONS A AND B DO INCLUDE MOLD MISMATCH AND ARE DETERMINED AT DATUM PLANE -H-.
7. DIMENSION D DOES NOT INCLUDE DAMBAR PROTRUSION. DAMBAR PROTRUSION SHALL NOT CAUSE THE LEAD WIDTH TO EXCEED 0.46(.018). MINIMUM SPACE BETWEEN PROTRUSION AND ADJACENT LEAD OR PROTRUSION 0.07(.003).

	MILLIMETERS		INCHES			MILLIMETERS		INCHES	
DIM	MIN	MAX	MIN	MAX	DIM	MIN	MAX	MIN	MAX
A	10.00 BSC		0.394 BSC						
A1	5.00 BSC		0.197 BSC						
B	10.00 BSC		0.394 BSC						
B1	5.00 BSC		0.197 BSC						
C	---	1.70	---	0.067					
C1	0.05	0.20	0.002	0.008					
C2	1.30	1.50	0.051	0.059					
D	0.20	0.40	0.008	0.016					
E	0.45	0.75	0.018	0.030					
F	0.22	0.35	0.009	0.014					
G	0.65 BSC		0.026 BSC						
J	0.07	0.20	0.003	0.008					
K	0.50 REF		0.020 REF						
R1	0.08	0.20	0.003	0.008					
S	12.00 BSC		0.472 BSC						
S1	6.00 BSC		0.236 BSC						
U	0.09	0.16	0.004	0.006					
V	12.00 BSC		0.472 BSC						
V1	6.00 BSC		0.236 BSC						
W	0.20 REF		0.008 REF						
Z	1.00 REF		0.039 REF						
θ	0°	7°	0°	7°					
θ1	0°	---	0°	---					
θ2	12° REF		12° REF						
θ3	12° REF		12° REF						

TITLE:	CASE NUMBER: 848D-03	
52LD TQFP 10 X 10 PKG, 0.65 PITCH, 1.4 THICK	STANDARD: FREESCALE	
	PACKAGE CODE: 8260	SHEET: 3 OF 4

freescale semiconductor

© FREESCALE SEMICONDUCTOR, INC. ALL RIGHTS RESERVED.
ELECTRONIC VERSIONS ARE UNCONTROLLED EXCEPT WHEN ACCESSED DIRECTLY FROM THE DOCUMENT CONTROL REPOSITORY. PRINTED VERSIONS ARE UNCONTROLLED EXCEPT WHEN STAMPED "CONTROLLED COPY" IN RED.

REVISION HISTORY

DOCUMENT NO: 98ASS23228W
PAGE: 848D
REV: E

LTR	ORIGINATOR	REVISIONS	DRAFTER	DATE
0	-----	RELEASED FOR PRODUCTION	-----	-----
A	-----	-----	-----	-----
B	-----	-----	-----	-----
C	-----	-----	-----	-----
D	-----	-----	-----	-----
E	PATRICE L.	UPDATED DRAWINGS PER FREESCALE FORMAT. ADDED REVISION HISTORY PAGE.	KL CHIN	7 OCT 2004

TITLE:
52LD TQFP
10 X 10 PKG, 0.65 PITCH, 1.4 THICK

CASE NUMBER: 848D-03
STANDARD: FREESCALE
PACKAGE CODE: 8260
SHEET: 4 OF 4

Appendix B IBIS Model

```
[IBIS ver]       2.1
[File name]      tpz013g3.ibs
[File Rev]       1.0
[Date]           07/30/2002
[Source]         Made By 0.13uu HSPICE model.
[Disclaimer]     This information is for modeling purposes only and is not
                 guaranteed.
[Copyright]      Copyright 2002, Design Service, tsmc, All Rights Reserved.
|
|*********************************************************************
|                          Component tpz013g3
|*********************************************************************

(Pin)   signal_name          model_name
  1       IO_VDD          PVDD2DGZ/PVDD2POC
   2 MODA_IRQA_PH0         PDU12SDGZ
  3     MODB_IRQB_PH1         PDU12SDGZ
  4       GPIO_PG13           PRD12DGZ
  5       GPIO_PG12           PRD12DGZ
  6     MODC_IRQC_PH2         PDU12SDGZ
  7     MODD_IRQD_PH3         PDU12SDGZ
  8       GPIO_PG11           PRD12DGZ
  9       CORE_VDD            PVDD1DGZ
 10       CORE_GND            PVSS3DGZ
 11       GPIO_PG10           PRD12DGZ
 12       GPIO_PG9            PRD12DGZ
 13       HREQ_PH4            PDU12SDGZ
 14        SS_HA2             PDUSDGZ
 15        SCK_SCL            PDU12SDGZ
 16       MISO_SDA            PDU16SDGZ
 17       MOSI_HA0            PDU12SDGZ
 18       GPIO_PG8            PRD12DGZ
 19       GPIO_PG7            PRD12DGZ
 20        IO_GND             PVSS3DGZ
 21        IO_VDD             PVDD2DGZ
 22       GPIO_PG6            PRD12DGZ
 23       GPIO_PG5            PRD12DGZ
 24          TDO              PRT24DGZ
 25          TDI              PDUDGZ
 26          TCK              PDUDGZ
 27          TMS              PDUDGZ
 28       GPIO_PG4            PRD12DGZ
```

29	TIO0_PB0		PRD12DGZ
30	WDT_TIO1_PB1		PRD12DGZ
31	PLOCK_TIO1_PB2		PRD12DGZ
32	CORE_VDD		PVDD1DGZ
33	CORE_GND		PVSS3DGZ
34	GPIO_PG3		PRD12DGZ
35	RESET_B		PDUSDGZ
36	GPIO_PG2		PRD12DGZ
37	GPIO_PG1		PRD12DGZ
38	GPIO_PG0		PRD12DGZ
39	PLLA_VDD		PVDD1P
40	PLLA_GND		PVSS1P
41	PLLP_VDD		PVDD2DGZ
42	PLLP_GND		PVSS2P
43	PLLD_GND		PVSS1P
44	PLLD_VDD		PVDD1PC
45	EXTAL	1/2	PDX03DGZ
46	XTAL	1/2	PDX03DGZ
47	IO_VDD		PVDD2DGZ
48	PINIT_NMI		PDUSDGZ
49	SDO0_1_PE11		PRD12DGZ
50	SDO1_1_PE10		PRD12DGZ
51	CORE_GND		PVSS3DGZ
52	CORE_VDD		PVDD1DGZ
53	SDO2_1_PE9		PRD12DGZ
54	SDO3_1_PE8		PRD12DGZ
55	SDO0_PC11		PRD12DGZ
56	SDO1_PC10		PRD12DGZ
57	SDO2_SDI3_PC9		PRD12DGZ
58	SDO3_SDI2_PC8		PRD12DGZ
59	SDO4_1_PE7		PRD12DGZ
60	SDO5_1_PC6		PRD12DGZ
61	IO_VDD		PVDD2DGZ
62	SCAN		PDDDGZ
63	HCKT_1_PE5		PRD12DGZ
64	HCKT_PC5		PRD12DGZ
65	HCKR_PC2		PRD12DGZ
66	HCKR_1_PE2		PRD12DGZ
67	SCKT_1_PE3		PRD12DGZ
68	SCKT_PC3		PRD12DGZ
69	SCKR_PC0		PRD12DGZ
70	SCKR_1_PE0		PRD12DGZ
71	CORE_GND		PVSS3DGZ
72	CORE_VDD		PVDD1DGZ

```
 73      GPIO_PG14            PRD12DGZ
 74       FST_1_PE4           PRD12DGZ
 75       FST_PC4             PRD12DGZ
 76       FSR_PC1             PRD12DGZ
 77       FSR_1_PE1           PRD12DGZ
 78      SDO4_SDI1_PC7        PRD12DGZ
|*********************************************************************
|                             Model prd12dgz
|*********************************************************************
|
[Model]          prd12dgz
Model_type       I/O
Polarity         Non-Inverting
Enable           Active-Low
Vinl =   0.80V
Vinh =   2.00V
Vmeas =   1.50V
Cref =  50.00pF
Rref =   1.00M
Vref =  0.000V
C_comp           4.17pF              3.75pF              4.58pF
|
|
[Temperature Range]       25.00               0.12k               0.000
[Pullup Reference]        3.30V               3.00V               3.60V
[Pulldown Reference]      0.000V              0.000V              0.000V
[POWER Clamp Reference]   5.00V               4.50V               5.50V
[GND Clamp Reference]     0.000V              0.000V              0.000V
[Pulldown]
| voltage     I(typ)              I(min)              I(max)
|
  -3.30       0.000A              0.000A              0.000A
  -3.10       0.000A              0.000A             -10.00mA
  -2.90       0.000A              0.000A              0.000A
  -2.70       0.000A              0.000A              0.000A
  -2.50       0.000A             -10.00mA             0.000A
  -2.30      -10.00mA             0.000A             -10.00mA
  -2.10       0.000A             -10.00mA             0.000A
  -1.90       0.000A              0.000A             -10.00mA
  -1.70       0.000A              0.000A             -10.00mA
  -1.50      -10.00mA             0.000A             -10.00mA
  -1.00      -11.00mA             -5.00mA            -13.00mA
  -0.90      -12.00mA             -5.00mA            -15.00mA
  -0.80      -24.00mA             -7.00mA            -32.51mA
```

-0.70	-29.14mA	-8.00mA	-32.35mA
-0.60	-26.47mA	-13.80mA	-29.35mA
-0.50	-22.61mA	-14.54mA	-25.54mA
-0.40	-18.32mA	-12.17mA	-20.93mA
-0.30	-13.87mA	-9.16mA	-15.91mA
-0.20	-9.33mA	-6.10mA	-10.74mA
-0.10	-4.70mA	-3.05mA	-5.43mA
-0.00	2.86nA	7.25nA	11.72nA
0.10	4.61mA	2.94mA	5.36mA
0.20	8.96mA	5.69mA	10.49mA
0.30	13.07mA	8.26mA	15.36mA
0.40	16.92mA	10.65mA	20.00mA
0.50	20.53mA	12.86mA	24.40mA
0.60	23.91mA	14.90mA	28.55mA
0.70	27.04mA	16.76mA	32.48mA
0.80	29.95mA	18.46mA	36.18mA
0.90	32.61mA	19.99mA	39.64mA
1.00	35.06mA	21.37mA	42.87mA
1.10	37.27mA	22.58mA	45.87mA
1.20	39.27mA	23.64mA	48.64mA
1.30	41.04mA	24.55mA	51.19mA
1.40	42.60mA	25.32mA	53.50mA
1.50	43.95mA	25.95mA	55.60mA
1.60	45.08mA	26.44mA	57.46mA
1.70	46.00mA	26.80mA	59.11mA
1.80	46.70mA	27.07mA	60.53mA
1.90	47.20mA	27.26mA	61.71mA
2.00	47.55mA	27.41mA	62.63mA
2.10	47.81mA	27.53mA	63.31mA
2.20	48.01mA	27.63mA	63.79mA
2.30	48.17mA	27.71mA	64.15mA
2.40	48.31mA	27.78mA	64.43mA
2.50	48.42mA	27.85mA	64.65mA
2.60	48.53mA	27.90mA	64.84mA
2.70	48.62mA	27.96mA	65.00mA
2.80	48.70mA	28.01mA	65.14mA
2.90	48.78mA	28.05mA	65.27mA
3.00	48.85mA	28.09mA	65.38mA
3.10	48.92mA	28.14mA	65.49mA
3.20	48.99mA	28.18mA	65.59mA
3.30	49.05mA	28.23mA	65.68mA
3.40	49.12mA	28.42mA	65.77mA
3.50	49.20mA	28.97mA	65.86mA
3.60	49.24mA	29.74mA	65.95mA

```
   3.70        49.31mA              30.57mA              66.04mA
   3.80        49.40mA              31.13mA              66.12mA
   3.90        49.61mA              28.60mA              66.22mA
   4.00        50.41mA              28.66mA              66.33mA
   4.10        51.65mA              28.72mA              66.49mA
   4.20        52.87mA              28.80mA              66.72mA
   4.30        50.78mA              28.89mA              67.28mA
   4.50        50.67mA              29.12mA              70.40mA
   4.70        51.17mA              29.42mA              73.03mA
   4.90        51.85mA              29.83mA              69.12mA
   5.10        52.75mA              30.37mA              70.18mA
   5.30        53.86mA              31.02mA              71.45mA
   5.50        55.21mA              31.82mA              73.05mA
   5.70        56.82mA              32.77mA              74.98mA
   5.90        58.68mA              33.86mA              77.25mA
   6.10        60.78mA              35.10mA              79.83mA
   6.60        66.91mA              38.73mA              87.50mA
|
[Pullup]
| voltage     I(typ)               I(min)               I(max)
|
  -3.30         0.11A              82.01mA               0.13A
  -3.10         0.11A              79.25mA               0.13A
  -2.90         0.10A              76.07mA               0.12A
  -2.70        97.60mA             72.55mA               0.11A
  -2.50        92.41mA             68.70mA               0.11A
  -2.30        87.04mA             64.55mA               0.10A
  -2.10        81.44mA             60.13mA              94.69mA
  -1.90        75.56mA             55.45mA              87.72mA
  -1.70        69.36mA             50.52mA              80.48mA
  -1.50        62.83mA             45.36mA              73.03mA
  -1.00        48.46mA             31.37mA              56.75mA
  -0.90        43.82mA             28.63mA              50.74mA
  -0.80        38.59mA             28.69mA              44.61mA
  -0.70        33.28mA             24.97mA              38.60mA
  -0.60        28.26mA             21.04mA              33.20mA
  -0.50        23.64mA             17.11mA              27.91mA
  -0.40        19.01mA             13.34mA              22.52mA
  -0.30        14.32mA              9.87mA              17.03mA
  -0.20         9.58mA              6.53mA              11.45mA
  -0.10         4.80mA              3.23mA               5.78mA
   0.00        34.08uA             11.20uA              71.92uA
   0.10        -4.58mA             -3.08mA              -5.50mA
   0.20        -8.94mA             -5.98mA             -10.80mA
```

0.30	-13.04mA	-8.72mA	-15.82mA
0.40	-16.89mA	-11.27mA	-20.56mA
0.50	-20.50mA	-13.66mA	-25.04mA
0.60	-23.86mA	-15.87mA	-29.25mA
0.70	-26.98mA	-17.92mA	-33.21mA
0.80	-29.87mA	-19.80mA	-36.91mA
0.90	-32.53mA	-21.51mA	-40.36mA
1.00	-34.96mA	-23.06mA	-43.56mA
1.10	-37.16mA	-24.45mA	-46.52mA
1.20	-39.15mA	-25.68mA	-49.24mA
1.30	-40.92mA	-26.75mA	-51.73mA
1.40	-42.48mA	-27.66mA	-53.98mA
1.50	-43.83mA	-28.43mA	-56.01mA
1.60	-44.98mA	-29.05mA	-57.81mA
1.70	-45.94mA	-29.53mA	-59.40mA
1.80	-46.72mA	-29.90mA	-60.77mA
1.90	-47.35mA	-30.20mA	-61.93mA
2.00	-47.86mA	-30.45mA	-62.90mA
2.10	-48.29mA	-30.66mA	-63.70mA
2.20	-48.65mA	-30.85mA	-64.37mA
2.30	-48.97mA	-31.02mA	-64.93mA
2.40	-49.25mA	-31.17mA	-65.40mA
2.50	-49.50mA	-31.31mA	-65.82mA
2.60	-49.72mA	-31.44mA	-66.18mA
2.70	-49.92mA	-31.56mA	-66.50mA
2.80	-50.11mA	-31.67mA	-66.79mA
2.90	-50.28mA	-31.78mA	-67.05mA
3.00	-50.44mA	-31.88mA	-67.29mA
3.10	-50.59mA	-31.98mA	-67.51mA
3.20	-50.74mA	-32.08mA	-67.72mA
3.30	-50.88mA	-32.20mA	-67.92mA
3.40	-51.01mA	-32.75mA	-68.11mA
3.50	-51.14mA	-40.35mA	-68.29mA
3.60	-51.27mA	-0.14A	-68.47mA
3.70	-51.42mA	-0.94A	-68.64mA
3.80	-51.84mA	-2.69A	-68.80mA
3.90	-53.78mA	-4.48A	-68.97mA
4.00	-64.80mA	-6.27A	-69.30mA
4.10	-0.29A	-8.06A	-70.82mA
4.20	-1.85A	-9.85A	-75.29mA
4.30	-3.90A	-11.63A	-83.12mA
4.50	-8.00A	-15.21A	-1.14A
4.70	-12.10A	-18.79A	-5.39A
4.90	-16.20A	-22.36A	-9.64A

```
   5.10      -20.30A            -25.94A            -13.89A
   5.30      -24.40A            -29.51A            -18.15A
   5.50      -28.50A            -33.09A            -22.41A
   5.70      -32.60A            -36.67A            -26.66A
   5.90      -36.70A            -40.24A            -30.92A
   6.10      -40.80A            -43.82A            -35.17A
   6.60      -51.05A            -52.76A            -45.81A
|
[GND_clamp]
| voltage     I(typ)             I(min)             I(max)
|
  -5.00      -85.83A            -77.78A            -88.32A
  -4.80      -81.73A            -74.20A            -84.06A
  -4.60      -77.63A            -70.62A            -79.80A
  -4.40      -73.53A            -67.04A            -75.54A
  -4.20      -69.43A            -63.46A            -71.28A
  -4.00      -65.33A            -59.88A            -67.02A
  -3.80      -61.23A            -56.30A            -62.76A
  -3.60      -57.13A            -52.72A            -58.50A
  -3.40      -53.03A            -49.14A            -54.24A
  -3.20      -48.93A            -45.56A            -49.98A
  -3.00      -44.84A            -41.99A            -45.73A
  -2.80      -40.74A            -38.42A            -41.48A
  -2.60      -36.64A            -34.84A            -37.22A
  -2.40      -32.54A            -31.27A            -32.97A
  -2.20      -28.45A            -27.69A            -28.72A
  -2.00      -24.35A            -24.12A            -24.46A
  -1.80      -20.25A            -20.54A            -20.21A
  -1.60      -16.15A            -16.97A            -15.95A
  -1.40      -12.05A            -13.39A            -11.70A
  -1.20       -7.95A             -9.82A             -7.44A
  -1.00       -3.85A             -6.24A             -3.19A
  -0.80       -0.23A             -2.66A            -70.99mA
  -0.60       -2.25mA            -0.10A             -5.98mA
  -0.40      -89.81uA            -0.52mA            -0.26mA
  -0.20      -27.92uA           -14.70uA           -42.92uA
  -0.00      -87.63nA           -89.05nA            -0.10uA
   0.20       18.71uA             7.31uA            32.27uA
   0.40       29.19uA            10.25uA            54.12uA
   0.60       32.49uA            10.67uA            65.78uA
   0.80       33.07uA            10.78uA            69.33uA
   1.00       33.30uA            10.86uA            70.17uA
   1.20       33.45uA            10.92uA            70.55uA
   1.40       33.57uA            10.97uA            70.80uA
```

```
   1.60        33.68uA              11.02uA              70.99uA
   1.80        33.77uA              11.07uA              71.16uA
   2.00        33.87uA              11.11uA              71.32uA
   2.20        33.96uA              11.14uA              71.46uA
   2.40        34.01uA              11.15uA              71.61uA
   2.60        34.03uA              11.16uA              71.76uA
   2.80        34.05uA              11.17uA              71.84uA
   3.00        34.06uA              11.19uA              71.86uA
   3.20        34.07uA              11.51uA              71.88uA
   3.40        34.07uA              10.95uA              71.90uA
   3.60        34.07uA              10.39uA              71.92uA
   3.80        34.07uA               9.83uA              71.94uA
   4.00        34.07uA               9.27uA              71.96uA
   4.20        34.07uA               8.71uA              71.98uA
   4.40        34.07uA               8.15uA              72.00uA
   4.60        34.07uA               7.59uA              72.02uA
   4.80        34.07uA               7.03uA              72.04uA
   5.00        34.07uA               6.47uA              72.06uA
|
[POWER_clamp]
| voltage     I(typ)               I(min)               I(max)
|
  -5.00        48.57uA              16.33uA              95.57uA
  -4.90        48.24uA              16.21uA              95.07uA
  -4.80        47.91uA              16.09uA              94.57uA
  -4.70        47.58uA              15.97uA              94.07uA
  -4.60        47.25uA              15.85uA              93.57uA
  -4.50        46.92uA              15.73uA              93.07uA
  -4.40        46.59uA              15.61uA              92.57uA
  -4.30        46.26uA              15.49uA              92.07uA
  -4.20        45.93uA              15.37uA              91.57uA
  -4.10        45.60uA              15.25uA              91.07uA
  -4.00        45.27uA              15.13uA              90.57uA
  -3.90        44.94uA              15.01uA              90.07uA
  -3.80        44.61uA              14.89uA              89.57uA
  -3.70        44.28uA              14.77uA              89.07uA
  -3.60        43.95uA              14.65uA              88.57uA
  -3.50        43.62uA              14.53uA              88.07uA
  -3.40        43.29uA              14.41uA              87.57uA
  -3.30        42.96uA              14.29uA              87.07uA
  -3.20        42.63uA              14.17uA              86.57uA
  -3.10        42.30uA              14.05uA              86.07uA
  -3.00        41.97uA              13.93uA              85.57uA
  -2.90        41.64uA              13.81uA              85.07uA
```

```
  -2.80       41.31uA             13.69uA             84.57uA
  -2.70       40.98uA             13.57uA             84.07uA
  -2.60       40.65uA             13.45uA             83.57uA
  -2.50       40.32uA             13.33uA             83.07uA
  -2.40       39.99uA             13.21uA             82.57uA
  -2.30       39.66uA             13.09uA             82.07uA
  -2.20       39.33uA             12.97uA             81.57uA
  -2.10       39.00uA             12.85uA             81.07uA
  -2.00       38.67uA             12.73uA             80.57uA
  -1.90       38.34uA             12.61uA             80.07uA
  -1.80       38.01uA             12.49uA             79.57uA
  -1.70       37.68uA             12.37uA             79.07uA
  -1.60       37.35uA             12.25uA             78.57uA
  -1.50       37.02uA             12.15uA             78.07uA
  -1.40       36.71uA             12.05uA             77.57uA
  -1.30       36.42uA             11.95uA             77.07uA
  -1.20       36.15uA             11.87uA             76.57uA
  -1.10       35.89uA             11.79uA             76.07uA
  -1.00       35.66uA             11.72uA             75.57uA
  -0.90       35.45uA             11.66uA             75.10uA
  -0.80       35.26uA             11.60uA             74.67uA
  -0.70       35.09uA             11.55uA             74.28uA
  -0.60       34.93uA             11.51uA             73.93uA
  -0.50       34.80uA             11.47uA             73.61uA
  -0.40       34.68uA             11.43uA             73.34uA
  -0.30       34.59uA             11.41uA             73.10uA
  -0.20       34.50uA             11.38uA             72.89uA
  -0.10       34.43uA             11.36uA             72.72uA
   0.00       34.37uA             11.34uA             72.57uA
|
[Ramp]
| variable       typ                 min                 max
dV/dt_r          1.21/2.06n          0.85/2.62n          1.45/1.82n
dV/dt_f          1.22/2.51n          0.78/3.11n          1.45/2.14n
R_load = 50.00
|
[Rising Waveform]
R_fixture = 50.00
V_fixture = 0.000
V_fixture_min = 0.000
V_fixture_max = 0.000
L_fixture = 0.000H
C_fixture = 0.000F
| time           V(typ)              V(min)              V(max)
```

|

0.000S	1.26uV	1.62uV	1.22uV
0.20nS	1.04uV	1.45uV	0.74uV
0.40nS	-5.64uV	-1.36uV	11.59uV
0.60nS	-0.29mV	-5.13uV	-3.27mV
0.80nS	-3.54mV	25.94uV	-9.17mV
1.00nS	-3.50mV	-4.79uV	56.24mV
1.20nS	33.86mV	-0.86mV	0.13V
1.40nS	79.34mV	-3.75mV	0.19V
1.60nS	0.14V	-8.09mV	0.27V
1.80nS	0.20V	3.52mV	0.36V
2.00nS	0.28V	38.97mV	0.47V
2.20nS	0.36V	82.84mV	0.59V
2.40nS	0.47V	0.13V	0.74V
2.60nS	0.60V	0.18V	0.90V
2.80nS	0.77V	0.27V	1.12V
3.00nS	0.92V	0.34V	1.32V
3.20nS	1.03V	0.40V	1.46V
3.40nS	1.16V	0.50V	1.63V
3.60nS	1.29V	0.59V	1.78V
3.80nS	1.39V	0.67V	1.91V
4.00nS	1.49V	0.75V	2.01V
4.20nS	1.58V	0.84V	2.11V
4.40nS	1.65V	0.91V	2.18V
4.60nS	1.69V	0.95V	2.21V
4.80nS	1.72V	0.99V	2.23V
5.00nS	1.76V	1.03V	2.27V
5.20nS	1.80V	1.07V	2.29V
5.40nS	1.83V	1.12V	2.31V
5.60nS	1.86V	1.16V	2.33V
5.80nS	1.88V	1.18V	2.34V
6.00nS	1.89V	1.20V	2.34V
6.20nS	1.91V	1.23V	2.35V
6.40nS	1.92V	1.25V	2.36V
6.60nS	1.93V	1.27V	2.37V
6.80nS	1.94V	1.28V	2.38V
7.00nS	1.95V	1.30V	2.38V
7.20nS	1.96V	1.31V	2.39V
7.40nS	1.97V	1.33V	2.39V
7.60nS	1.98V	1.34V	2.39V
7.80nS	1.98V	1.35V	2.40V
8.00nS	1.98V	1.36V	2.40V
8.20nS	1.99V	1.37V	2.40V
8.40nS	1.99V	1.37V	2.40V

```
   8.60nS          1.99V                1.38V                2.41V
   8.80nS          2.00V                1.39V                2.41V
   9.00nS          2.00V                1.39V                2.41V
   9.20nS          2.00V                1.40V                2.41V
   9.40nS          2.01V                1.40V                2.41V
   9.60nS          2.01V                1.41V                2.42V
   9.80nS          2.01V                1.41V                2.42V
  10.00nS          2.01V                1.41V                2.42V
|
[Rising Waveform]
R_fixture = 50.00
V_fixture = 3.30
V_fixture_min = 3.00
V_fixture_max = 3.60
L_fixture = 0.000H
C_fixture = 0.000F
| time            V(typ)               V(min)               V(max)
|
  0.000S          1.27V                1.66V                1.18V
   0.20nS         1.27V                1.66V                1.18V
   0.40nS         1.27V                1.66V                1.18V
   0.60nS         1.27V                1.66V                1.19V
   0.80nS         1.28V                1.66V                1.24V
   1.00nS         1.40V                1.66V                1.47V
   1.20nS         1.60V                1.67V                1.71V
   1.40nS         1.77V                1.69V                1.88V
   1.60nS         1.99V                1.80V                2.12V
   1.80nS         2.24V                1.95V                2.41V
   2.00nS         2.50V                2.13V                2.70V
   2.20nS         2.74V                2.32V                2.99V
   2.40nS         2.94V                2.49V                3.21V
   2.60nS         3.09V                2.63V                3.34V
   2.80nS         3.18V                2.79V                3.44V
   3.00nS         3.24V                2.87V                3.49V
   3.20nS         3.26V                2.91V                3.52V
   3.40nS         3.27V                2.96V                3.55V
   3.60nS         3.29V                2.98V                3.57V
   3.80nS         3.29V                2.99V                3.59V
   4.00nS         3.30V                2.99V                3.59V
   4.20nS         3.30V                3.00V                3.60V
   4.40nS         3.30V                3.00V                3.60V
   4.60nS         3.30V                3.00V                3.60V
   4.80nS         3.30V                3.00V                3.60V
   5.00nS         3.30V                3.00V                3.60V
```

```
   5.20nS          3.30V                3.00V                3.60V
   5.40nS          3.30V                3.00V                3.60V
   5.60nS          3.30V                3.00V                3.60V
   5.80nS          3.30V                3.00V                3.60V
   6.00nS          3.30V                3.00V                3.60V
   6.20nS          3.30V                3.00V                3.60V
   6.40nS          3.30V                3.00V                3.60V
   6.60nS          3.30V                3.00V                3.60V
   6.80nS          3.30V                3.00V                3.60V
   7.00nS          3.30V                3.00V                3.60V
   7.20nS          3.30V                3.00V                3.60V
   7.40nS          3.30V                3.00V                3.60V
   7.60nS          3.30V                3.00V                3.60V
   7.80nS          3.30V                3.00V                3.60V
   8.00nS          3.30V                3.00V                3.60V
   8.20nS          3.30V                3.00V                3.60V
   8.40nS          3.30V                3.00V                3.60V
   8.60nS          3.30V                3.00V                3.60V
   8.80nS          3.30V                3.00V                3.60V
   9.00nS          3.30V                3.00V                3.60V
   9.20nS          3.30V                3.00V                3.60V
   9.40nS          3.30V                3.00V                3.60V
   9.60nS          3.30V                3.00V                3.60V
   9.80nS          3.30V                3.00V                3.60V
  10.00nS          3.30V                3.00V                3.60V
|
[Falling Waveform]
R_fixture = 50.00
V_fixture = 0.000
V_fixture_min = 0.000
V_fixture_max = 0.000
L_fixture = 0.000H
C_fixture = 0.000F
| time           V(typ)               V(min)               V(max)
|
  0.000S          2.02V                1.44V                2.43V
   0.20nS         2.02V                1.44V                2.43V
   0.40nS         2.02V                1.44V                2.43V
   0.60nS         2.02V                1.44V                2.38V
   0.80nS         1.97V                1.44V                2.13V
   1.00nS         1.73V                1.44V                1.82V
   1.20nS         1.45V                1.42V                1.49V
   1.40nS         1.24V                1.38V                1.24V
   1.60nS         0.96V                1.29V                0.92V
```

```
   1.80nS          0.70V                1.12V                0.67V
   2.00nS          0.50V                0.92V                0.50V
   2.20nS          0.36V                0.73V                0.38V
   2.40nS          0.27V                0.55V                0.30V
   2.60nS          0.20V                0.40V                0.24V
   2.80nS          0.14V                0.27V                0.17V
   3.00nS         99.16mV               0.20V                0.13V
   3.20nS         79.41mV               0.16V                0.11V
   3.40nS         53.08mV               0.11V               78.74mV
   3.60nS         36.21mV              75.26mV              59.16mV
   3.80nS         23.36mV              51.00mV              39.59mV
   4.00nS         12.42mV              31.87mV              27.31mV
   4.20nS          6.73mV              18.57mV              15.01mV
   4.40nS          2.10mV               8.15mV               7.54mV
   4.60nS          1.57mV               5.93mV               4.99mV
   4.80nS          1.14mV               3.71mV               2.45mV
   5.00nS          0.68mV               1.71mV               1.29mV
   5.20nS          0.62mV               1.31mV               0.88mV
   5.40nS          0.54mV               0.89mV               0.54mV
   5.60nS          0.46mV               0.73mV               0.46mV
   5.80nS          0.41mV               0.65mV               0.42mV
   6.00nS          0.37mV               0.59mV               0.38mV
   6.20nS          0.34mV               0.53mV               0.34mV
   6.40nS          0.32mV               0.48mV               0.29mV
   6.60nS          0.27mV               0.43mV               0.26mV
   6.80nS          0.22mV               0.38mV               0.22mV
   7.00nS          0.18mV               0.34mV               0.20mV
   7.20nS          0.18mV               0.30mV               0.18mV
   7.40nS          0.18mV               0.26mV               0.15mV
   7.60nS          0.15mV               0.23mV               0.13mV
   7.80nS          0.12mV               0.22mV               0.12mV
   8.00nS          0.11mV               0.20mV               0.11mV
   8.20nS          0.11mV               0.18mV               0.10mV
   8.40nS          0.12mV               0.17mV              92.36uV
   8.60nS         97.87uV               0.16mV              78.53uV
   8.80nS         59.73uV               0.15mV              64.71uV
   9.00nS         36.18uV               0.14mV              61.02uV
   9.20nS         61.23uV               0.12mV              60.74uV
   9.40nS         87.87uV               0.10mV              58.12uV
   9.60nS         67.13uV               0.10mV              46.02uV
   9.80nS         29.42uV               0.10mV              39.81uV
  10.00nS         71.42uV              84.83uV              50.29uV
|
[Falling Waveform]
```

```
R_fixture = 50.00
V_fixture = 3.30
V_fixture_min = 3.00
V_fixture_max = 3.60
L_fixture = 0.000H
C_fixture = 0.000F
| time          V(typ)          V(min)          V(max)
|
  0.000S         3.30V           3.00V           3.60V
   0.20nS        3.30V           3.00V           3.60V
   0.40nS        3.30V           3.00V           3.60V
   0.60nS        3.30V           3.00V           3.59V
   0.80nS        3.30V           3.00V           3.48V
   1.00nS        3.22V           3.00V           3.36V
   1.20nS        3.12V           3.00V           3.25V
   1.40nS        3.06V           3.00V           3.16V
   1.60nS        2.96V           3.00V           3.04V
   1.80nS        2.86V           2.95V           2.90V
   2.00nS        2.75V           2.89V           2.76V
   2.20nS        2.64V           2.83V           2.61V
   2.40nS        2.52V           2.77V           2.48V
   2.60nS        2.40V           2.70V           2.34V
   2.80nS        2.26V           2.61V           2.18V
   3.00nS        2.16V           2.54V           2.04V
   3.20nS        2.10V           2.48V           1.93V
   3.40nS        2.01V           2.41V           1.79V
   3.60nS        1.93V           2.35V           1.68V
   3.80nS        1.86V           2.30V           1.57V
   4.00nS        1.78V           2.25V           1.49V
   4.20nS        1.68V           2.19V           1.41V
   4.40nS        1.58V           2.13V           1.34V
   4.60nS        1.53V           2.10V           1.31V
   4.80nS        1.49V           2.08V           1.29V
   5.00nS        1.43V           2.04V           1.26V
   5.20nS        1.39V           2.01V           1.24V
   5.40nS        1.35V           1.98V           1.22V
   5.60nS        1.32V           1.95V           1.21V
   5.80nS        1.31V           1.94V           1.20V
   6.00nS        1.30V           1.93V           1.20V
   6.20nS        1.29V           1.91V           1.19V
   6.40nS        1.29V           1.90V           1.19V
   6.60nS        1.29V           1.88V           1.19V
   6.80nS        1.28V           1.87V           1.19V
   7.00nS        1.28V           1.85V           1.19V
```

```
   7.20nS         1.28V              1.84V              1.19V
   7.40nS         1.28V              1.83V              1.19V
   7.60nS         1.28V              1.82V              1.19V
   7.80nS         1.28V              1.81V              1.19V
   8.00nS         1.28V              1.81V              1.19V
   8.20nS         1.28V              1.80V              1.19V
   8.40nS         1.27V              1.79V              1.19V
   8.60nS         1.27V              1.79V              1.19V
   8.80nS         1.27V              1.78V              1.19V
   9.00nS         1.27V              1.77V              1.19V
   9.20nS         1.27V              1.76V              1.19V
   9.40nS         1.27V              1.75V              1.19V
   9.60nS         1.27V              1.73V              1.18V
   9.80nS         1.27V              1.72V              1.18V
  10.00nS         1.27V              1.71V              1.18V
|
| End [Model] prd12dgz
|
|*********************************************************************
|                            Model prd16dgz
|*********************************************************************
|
[Model]          prd16dgz
Model_type       I/O
Polarity         Non-Inverting
Enable           Active-Low
Vinl =   0.80V
Vinh =   2.00V
Vmeas =   1.50V
Cref =  50.00pF
Rref =   1.00M
Vref =  0.000V
C_comp           3.86pF             3.48pF             4.25pF
|
|
[Temperature Range]       25.00              0.12k              0.000
[Pullup Reference]        3.30V              3.00V              3.60V
[Pulldown Reference]      0.000V             0.000V             0.000V
[POWER Clamp Reference]   5.00V              4.50V              5.50V
[GND Clamp Reference]     0.000V             0.000V             0.000V
[Pulldown]
| voltage     I(typ)             I(min)             I(max)
|
  -3.30      -10.00mA            0.000A             0.000A
```

-3.10	0.000A	0.000A	0.000A
-2.90	0.000A	0.000A	0.000A
-2.70	0.000A	0.000A	0.000A
-2.50	0.000A	0.000A	0.000A
-2.30	0.000A	0.000A	0.000A
-2.10	-10.00mA	0.000A	0.000A
-1.90	0.000A	0.000A	-10.00mA
-1.70	-10.00mA	0.000A	-10.00mA
-1.50	-10.00mA	0.000A	-20.00mA
-1.00	-16.00mA	-6.00mA	-18.00mA
-0.90	-16.00mA	-8.00mA	-21.00mA
-0.80	-32.00mA	-8.00mA	-43.34mA
-0.70	-38.86mA	-10.60mA	-43.13mA
-0.60	-35.29mA	-18.40mA	-39.13mA
-0.50	-30.14mA	-19.39mA	-34.05mA
-0.40	-24.42mA	-16.22mA	-27.89mA
-0.30	-18.49mA	-12.22mA	-21.21mA
-0.20	-12.44mA	-8.14mA	-14.32mA
-0.10	-6.27mA	-4.06mA	-7.24mA
-0.00	4.09nA	6.98nA	10.67nA
0.10	6.14mA	3.92mA	7.15mA
0.20	11.95mA	7.59mA	13.98mA
0.30	17.42mA	11.01mA	20.48mA
0.40	22.56mA	14.20mA	26.67mA
0.50	27.38mA	17.14mA	32.53mA
0.60	31.88mA	19.86mA	38.07mA
0.70	36.06mA	22.35mA	43.31mA
0.80	39.93mA	24.61mA	48.24mA
0.90	43.49mA	26.66mA	52.85mA
1.00	46.74mA	28.49mA	57.16mA
1.10	49.69mA	30.11mA	61.16mA
1.20	52.35mA	31.52mA	64.86mA
1.30	54.72mA	32.74mA	68.25mA
1.40	56.80mA	33.76mA	71.34mA
1.50	58.59mA	34.59mA	74.13mA
1.60	60.11mA	35.25mA	76.62mA
1.70	61.33mA	35.74mA	78.81mA
1.80	62.26mA	36.09mA	80.70mA
1.90	62.93mA	36.35mA	82.27mA
2.00	63.40mA	36.55mA	83.51mA
2.10	63.75mA	36.71mA	84.41mA
2.20	64.01mA	36.84mA	85.06mA
2.30	64.23mA	36.95mA	85.54mA
2.40	64.41mA	37.04mA	85.91mA

```
   2.50        64.56mA              37.13mA              86.20mA
   2.60        64.70mA              37.21mA              86.45mA
   2.70        64.82mA              37.28mA              86.66mA
   2.80        64.94mA              37.34mA              86.85mA
   2.90        65.04mA              37.40mA              87.02mA
   3.00        65.14mA              37.46mA              87.17mA
   3.10        65.23mA              37.51mA              87.32mA
   3.20        65.32mA              37.57mA              87.45mA
   3.30        65.40mA              37.63mA              87.58mA
   3.40        65.49mA              37.81mA              87.70mA
   3.50        65.59mA              38.34mA              87.82mA
   3.60        65.66mA              39.10mA              87.93mA
   3.70        65.75mA              39.94mA              88.05mA
   3.80        65.86mA              40.42mA              88.16mA
   3.90        66.08mA              38.09mA              88.29mA
   4.00        66.86mA              38.16mA              88.44mA
   4.10        68.11mA              38.25mA              88.63mA
   4.20        69.36mA              38.35mA              88.90mA
   4.30        67.34mA              38.47mA              89.46mA
   4.50        67.43mA              38.78mA              92.67mA
   4.70        68.10mA              39.19mA              95.47mA
   4.90        69.00mA              39.73mA              91.91mA
   5.10        70.20mA              40.44mA              93.29mA
   5.30        71.67mA              41.32mA              95.00mA
   5.50        73.47mA              42.38mA              97.12mA
   5.70        75.61mA              43.64mA              99.69mA
   5.90        78.09mA              45.10mA               0.10A
   6.10        80.89mA              46.75mA               0.11A
   6.60        89.06mA              51.59mA               0.12A
|
[Pullup]
| voltage     I(typ)               I(min)               I(max)
|
  -3.30         0.16A                0.12A                0.19A
  -3.10         0.16A                0.12A                0.18A
  -2.90         0.15A                0.11A                0.17A
  -2.70         0.14A                0.11A                0.16A
  -2.50         0.14A                0.10A                0.16A
  -2.30         0.13A               96.26mA               0.15A
  -2.10         0.12A               89.72mA               0.14A
  -1.90         0.11A               82.79mA               0.13A
  -1.70         0.10A               75.47mA               0.12A
  -1.50        93.76mA              67.80mA               0.11A
  -1.00        70.54mA              46.98mA              82.43mA
```

-0.90	63.97mA	42.83mA	74.23mA
-0.80	56.74mA	41.47mA	65.83mA
-0.70	49.39mA	36.27mA	57.50mA
-0.60	42.27mA	30.78mA	49.67mA
-0.50	35.43mA	25.27mA	41.79mA
-0.40	28.50mA	19.90mA	33.74mA
-0.30	21.47mA	14.79mA	25.52mA
-0.20	14.35mA	9.79mA	17.14mA
-0.10	7.19mA	4.85mA	8.64mA
0.00	34.08uA	11.19uA	71.92uA
0.10	-6.89mA	-4.62mA	-8.29mA
0.20	-13.43mA	-8.98mA	-16.24mA
0.30	-19.58mA	-13.08mA	-23.77mA
0.40	-25.36mA	-16.92mA	-30.88mA
0.50	-30.77mA	-20.50mA	-37.60mA
0.60	-35.81mA	-23.82mA	-43.93mA
0.70	-40.49mA	-26.89mA	-49.86mA
0.80	-44.83mA	-29.70mA	-55.41mA
0.90	-48.81mA	-32.27mA	-60.59mA
1.00	-52.46mA	-34.60mA	-65.39mA
1.10	-55.77mA	-36.68mA	-69.83mA
1.20	-58.75mA	-38.52mA	-73.91mA
1.30	-61.41mA	-40.13mA	-77.64mA
1.40	-63.75mA	-41.50mA	-81.02mA
1.50	-65.77mA	-42.65mA	-84.06mA
1.60	-67.50mA	-43.58mA	-86.77mA
1.70	-68.93mA	-44.31mA	-89.14mA
1.80	-70.10mA	-44.87mA	-91.20mA
1.90	-71.04mA	-45.31mA	-92.94mA
2.00	-71.82mA	-45.68mA	-94.40mA
2.10	-72.46mA	-46.00mA	-95.60mA
2.20	-73.01mA	-46.28mA	-96.60mA
2.30	-73.48mA	-46.53mA	-97.44mA
2.40	-73.90mA	-46.76mA	-98.15mA
2.50	-74.27mA	-46.97mA	-98.77mA
2.60	-74.60mA	-47.17mA	-99.31mA
2.70	-74.91mA	-47.35mA	-99.80mA
2.80	-75.18mA	-47.52mA	-0.10A
2.90	-75.44mA	-47.68mA	-0.10A
3.00	-75.68mA	-47.83mA	-0.10A
3.10	-75.90mA	-47.97mA	-0.10A
3.20	-76.12mA	-48.11mA	-0.10A
3.30	-76.32mA	-48.27mA	-0.10A
3.40	-76.52mA	-48.87mA	-0.10A

```
   3.50      -76.71mA            -56.48mA             -0.10A
   3.60      -76.89mA             -0.15A              -0.10A
   3.70      -77.09mA             -0.95A              -0.10A
   3.80      -77.56mA             -2.71A              -0.10A
   3.90      -79.54mA             -4.50A              -0.10A
   4.00      -90.56mA             -6.29A              -0.10A
   4.10       -0.31A              -8.09A              -0.11A
   4.20       -1.88A              -9.88A              -0.11A
   4.30       -3.93A             -11.66A              -0.12A
   4.50       -8.04A             -15.24A              -1.17A
   4.70      -12.14A             -18.83A              -5.43A
   4.90      -16.25A             -22.41A              -9.69A
   5.10      -20.36A             -25.99A             -13.95A
   5.30      -24.46A             -29.57A             -18.21A
   5.50      -28.57A             -33.15A             -22.48A
   5.70      -32.68A             -36.73A             -26.74A
   5.90      -36.78A             -40.31A             -31.00A
   6.10      -40.89A             -43.89A             -35.27A
   6.60      -51.16A             -52.84A             -45.93A
|
[GND_clamp]
| voltage     I(typ)              I(min)              I(max)
|
  -5.00      -85.90A             -77.84A             -88.40A
  -4.80      -81.80A             -74.26A             -84.14A
  -4.60      -77.70A             -70.68A             -79.88A
  -4.40      -73.60A             -67.10A             -75.62A
  -4.20      -69.50A             -63.52A             -71.36A
  -4.00      -65.40A             -59.94A             -67.10A
  -3.80      -61.30A             -56.36A             -62.84A
  -3.60      -57.20A             -52.78A             -58.58A
  -3.40      -53.10A             -49.20A             -54.32A
  -3.20      -49.00A             -45.62A             -50.06A
  -3.00      -44.90A             -42.04A             -45.80A
  -2.80      -40.80A             -38.46A             -41.54A
  -2.60      -36.69A             -34.89A             -37.28A
  -2.40      -32.59A             -31.31A             -33.02A
  -2.20      -28.49A             -27.73A             -28.76A
  -2.00      -24.38A             -24.15A             -24.50A
  -1.80      -20.28A             -20.57A             -20.24A
  -1.60      -16.17A             -16.99A             -15.97A
  -1.40      -12.06A             -13.40A             -11.71A
  -1.20       -7.96A              -9.83A              -7.45A
  -1.00       -3.86A              -6.25A              -3.19A
```

```
  -0.80       -0.23A              -2.66A              -70.76mA
  -0.60       -2.22mA             -0.10A               -5.90mA
  -0.40      -89.20uA             -0.52mA              -0.26mA
  -0.20      -27.89uA            -14.67uA             -42.88uA
  -0.00      -62.88nA            -63.80nA             -74.38nA
   0.20       18.73uA              7.33uA              32.30uA
   0.40       29.21uA             10.27uA              54.14uA
   0.60       32.51uA             10.69uA              65.81uA
   0.80       33.09uA             10.80uA              69.35uA
   1.00       33.31uA             10.87uA              70.19uA
   1.20       33.46uA             10.93uA              70.56uA
   1.40       33.58uA             10.98uA              70.81uA
   1.60       33.69uA             11.03uA              71.00uA
   1.80       33.78uA             11.08uA              71.17uA
   2.00       33.87uA             11.12uA              71.33uA
   2.20       33.96uA             11.14uA              71.47uA
   2.40       34.01uA             11.15uA              71.62uA
   2.60       34.03uA             11.16uA              71.76uA
   2.80       34.04uA             11.17uA              71.84uA
   3.00       34.05uA             11.18uA              71.86uA
   3.20       34.06uA             11.57uA              71.88uA
   3.40       34.08uA             10.87uA              71.90uA
   3.60       34.10uA             10.17uA              71.92uA
   3.80       34.12uA              9.47uA              71.94uA
   4.00       34.14uA              8.77uA              71.96uA
   4.20       34.16uA              8.07uA              71.98uA
   4.40       34.18uA              7.37uA              72.00uA
   4.60       34.20uA              6.67uA              72.02uA
   4.80       34.22uA              5.97uA              72.04uA
   5.00       34.24uA              5.27uA              72.06uA
|
[POWER_clamp]
| voltage     I(typ)              I(min)              I(max)
|
  -5.00       48.54uA             16.29uA              95.93uA
  -4.90       48.21uA             16.17uA              95.42uA
  -4.80       47.88uA             16.05uA              94.91uA
  -4.70       47.55uA             15.93uA              94.40uA
  -4.60       47.22uA             15.81uA              93.89uA
  -4.50       46.89uA             15.69uA              93.38uA
  -4.40       46.56uA             15.57uA              92.87uA
  -4.30       46.23uA             15.45uA              92.36uA
  -4.20       45.90uA             15.33uA              91.85uA
  -4.10       45.57uA             15.21uA              91.34uA
```

```
  -4.00        45.24uA              15.09uA              90.83uA
  -3.90        44.91uA              14.97uA              90.32uA
  -3.80        44.58uA              14.85uA              89.81uA
  -3.70        44.25uA              14.73uA              89.30uA
  -3.60        43.92uA              14.61uA              88.79uA
  -3.50        43.59uA              14.49uA              88.28uA
  -3.40        43.26uA              14.37uA              87.77uA
  -3.30        42.93uA              14.25uA              87.26uA
  -3.20        42.60uA              14.13uA              86.75uA
  -3.10        42.27uA              14.01uA              86.24uA
  -3.00        41.94uA              13.89uA              85.73uA
  -2.90        41.61uA              13.77uA              85.22uA
  -2.80        41.28uA              13.65uA              84.71uA
  -2.70        40.95uA              13.53uA              84.20uA
  -2.60        40.62uA              13.41uA              83.69uA
  -2.50        40.29uA              13.29uA              83.18uA
  -2.40        39.96uA              13.17uA              82.67uA
  -2.30        39.63uA              13.05uA              82.16uA
  -2.20        39.30uA              12.93uA              81.65uA
  -2.10        38.97uA              12.81uA              81.14uA
  -2.00        38.64uA              12.69uA              80.63uA
  -1.90        38.31uA              12.57uA              80.12uA
  -1.80        37.98uA              12.45uA              79.61uA
  -1.70        37.65uA              12.33uA              79.10uA
  -1.60        37.32uA              12.22uA              78.59uA
  -1.50        36.99uA              12.11uA              78.08uA
  -1.40        36.68uA              12.02uA              77.57uA
  -1.30        36.39uA              11.92uA              77.06uA
  -1.20        36.12uA              11.84uA              76.55uA
  -1.10        35.87uA              11.76uA              76.04uA
  -1.00        35.63uA              11.69uA              75.53uA
  -0.90        35.42uA              11.63uA              75.06uA
  -0.80        35.23uA              11.58uA              74.64uA
  -0.70        35.06uA              11.53uA              74.25uA
  -0.60        34.91uA              11.48uA              73.90uA
  -0.50        34.78uA              11.44uA              73.58uA
  -0.40        34.66uA              11.41uA              73.31uA
  -0.30        34.56uA              11.38uA              73.07uA
  -0.20        34.48uA              11.36uA              72.87uA
  -0.10        34.41uA              11.34uA              72.69uA
   0.00        34.35uA              11.32uA              72.55uA
|
[Ramp]
| variable        typ                  min                  max
```

```
dV/dt_r          1.43/2.06n          1.08/2.82n          1.66/1.86n
dV/dt_f          1.39/2.80n          0.98/4.41n          1.61/2.52n
R_load = 50.00
|
[Rising Waveform]
R_fixture = 50.00
V_fixture = 0.000
V_fixture_min = 0.000
V_fixture_max = 0.000
L_fixture = 0.000H
C_fixture = 0.000F
| time           V(typ)              V(min)              V(max)
|
  0.000S          0.71uV              0.94uV              0.68uV
   0.20nS         0.48uV              0.81uV             0.000V
   0.40nS        -6.07uV             -1.89uV             12.38uV
   0.60nS        -0.29mV             -5.66uV             -3.13mV
   0.80nS        -3.39mV             26.90uV             -6.39mV
   1.00nS        -4.34mV             -5.17uV             43.34mV
   1.20nS        25.79mV             -0.87mV              0.11V
   1.40nS        62.40mV             -3.65mV              0.15V
   1.60nS         0.11V              -7.89mV              0.21V
   1.80nS         0.16V               0.71mV              0.28V
   2.00nS         0.22V              29.71mV              0.37V
   2.20nS         0.28V              65.63mV              0.46V
   2.40nS         0.37V               0.10V               0.59V
   2.60nS         0.48V               0.15V               0.71V
   2.80nS         0.63V               0.22V               0.92V
   3.00nS         0.79V               0.28V               1.12V
   3.20nS         0.90V               0.34V               1.28V
   3.40nS         1.07V               0.43V               1.49V
   3.60nS         1.24V               0.53V               1.70V
   3.80nS         1.39V               0.63V               1.89V
   4.00nS         1.55V               0.74V               2.07V
   4.20nS         1.71V               0.86V               2.24V
   4.40nS         1.84V               0.97V               2.37V
   4.60nS         1.90V               1.03V               2.44V
   4.80nS         1.96V               1.09V               2.50V
   5.00nS         2.03V               1.16V               2.54V
   5.20nS         2.08V               1.22V               2.59V
   5.40nS         2.13V               1.29V               2.62V
   5.60nS         2.18V               1.36V               2.65V
   5.80nS         2.20V               1.39V               2.66V
   6.00nS         2.22V               1.43V               2.67V
```

```
   6.20nS          2.24V                1.47V                2.68V
   6.40nS          2.26V                1.51V                2.69V
   6.60nS          2.27V                1.54V                2.70V
   6.80nS          2.29V                1.57V                2.71V
   7.00nS          2.30V                1.60V                2.72V
   7.20nS          2.31V                1.63V                2.72V
   7.40nS          2.32V                1.66V                2.73V
   7.60nS          2.33V                1.68V                2.74V
   7.80nS          2.34V                1.69V                2.74V
   8.00nS          2.34V                1.70V                2.74V
   8.20nS          2.35V                1.72V                2.75V
   8.40nS          2.35V                1.73V                2.75V
   8.60nS          2.36V                1.74V                2.75V
   8.80nS          2.36V                1.75V                2.76V
   9.00nS          2.36V                1.76V                2.76V
   9.20nS          2.37V                1.77V                2.76V
   9.40nS          2.37V                1.78V                2.76V
   9.60nS          2.38V                1.79V                2.77V
   9.80nS          2.38V                1.80V                2.77V
  10.00nS          2.38V                1.80V                2.77V
|
[Rising Waveform]
R_fixture = 50.00
V_fixture = 3.30
V_fixture_min = 3.00
V_fixture_max = 3.60
L_fixture = 0.000H
C_fixture = 0.000F
| time           V(typ)               V(min)               V(max)
|
  0.000S          0.98V                1.34V                0.92V
   0.20nS         0.98V                1.34V                0.92V
   0.40nS         0.98V                1.34V                0.92V
   0.60nS         0.98V                1.34V                0.92V
   0.80nS         0.99V                1.34V                0.94V
   1.00nS         1.05V                1.34V                1.07V
   1.20nS         1.18V                1.34V                1.24V
   1.40nS         1.31V                1.36V                1.37V
   1.60nS         1.49V                1.44V                1.55V
   1.80nS         1.69V                1.57V                1.76V
   2.00nS         1.92V                1.73V                2.02V
   2.20nS         2.18V                1.92V                2.33V
   2.40nS         2.46V                2.11V                2.62V
   2.60nS         2.73V                2.32V                2.91V
```

```
   2.80nS          2.97V                2.55V                3.20V
   3.00nS          3.09V                2.69V                3.33V
   3.20nS          3.15V                2.76V                3.39V
   3.40nS          3.20V                2.86V                3.44V
   3.60nS          3.24V                2.92V                3.50V
   3.80nS          3.26V                2.95V                3.53V
   4.00nS          3.28V                2.98V                3.55V
   4.20nS          3.29V                2.99V                3.57V
   4.40nS          3.29V                2.99V                3.59V
   4.60nS          3.30V                3.00V                3.59V
   4.80nS          3.30V                3.00V                3.59V
   5.00nS          3.30V                3.00V                3.60V
   5.20nS          3.30V                3.00V                3.60V
   5.40nS          3.30V                3.00V                3.60V
   5.60nS          3.30V                3.00V                3.60V
   5.80nS          3.30V                3.00V                3.60V
   6.00nS          3.30V                3.00V                3.60V
   6.20nS          3.30V                3.00V                3.60V
   6.40nS          3.30V                3.00V                3.60V
   6.60nS          3.30V                3.00V                3.60V
   6.80nS          3.30V                3.00V                3.60V
   7.00nS          3.30V                3.00V                3.60V
   7.20nS          3.30V                3.00V                3.60V
   7.40nS          3.30V                3.00V                3.60V
   7.60nS          3.30V                3.00V                3.60V
   7.80nS          3.30V                3.00V                3.60V
   8.00nS          3.30V                3.00V                3.60V
   8.20nS          3.30V                3.00V                3.60V
   8.40nS          3.30V                3.00V                3.60V
   8.60nS          3.30V                3.00V                3.60V
   8.80nS          3.30V                3.00V                3.60V
   9.00nS          3.30V                3.00V                3.60V
   9.20nS          3.30V                3.00V                3.60V
   9.40nS          3.30V                3.00V                3.60V
   9.60nS          3.30V                3.00V                3.60V
   9.80nS          3.30V                3.00V                3.60V
  10.00nS          3.30V                3.00V                3.60V
|
[Falling Waveform]
R_fixture = 50.00
V_fixture = 0.000
V_fixture_min = 0.000
V_fixture_max = 0.000
L_fixture = 0.000H
```

C_fixture = 0.000F

time	V(typ)	V(min)	V(max)
0.000S	2.41V	1.87V	2.79V
0.20nS	2.41V	1.87V	2.79V
0.40nS	2.41V	1.87V	2.79V
0.60nS	2.41V	1.87V	2.76V
0.80nS	2.37V	1.87V	2.62V
1.00nS	2.24V	1.86V	2.44V
1.20nS	2.07V	1.85V	2.25V
1.40nS	1.94V	1.82V	2.10V
1.60nS	1.76V	1.75V	1.85V
1.80nS	1.54V	1.65V	1.55V
2.00nS	1.28V	1.51V	1.23V
2.20nS	1.01V	1.36V	0.96V
2.40nS	0.78V	1.18V	0.77V
2.60nS	0.61V	0.99V	0.63V
2.80nS	0.46V	0.76V	0.51V
3.00nS	0.37V	0.59V	0.43V
3.20nS	0.33V	0.49V	0.37V
3.40nS	0.26V	0.39V	0.32V
3.60nS	0.21V	0.31V	0.27V
3.80nS	0.17V	0.25V	0.22V
4.00nS	0.14V	0.19V	0.19V
4.20nS	0.10V	0.15V	0.14V
4.40nS	73.29mV	0.10V	0.11V
4.60nS	60.19mV	87.46mV	93.57mV
4.80nS	48.89mV	70.67mV	78.29mV
5.00nS	34.23mV	50.83mV	61.98mV
5.20nS	24.65mV	38.23mV	46.06mV
5.40nS	14.47mV	23.57mV	32.51mV
5.60nS	8.10mV	14.65mV	20.47mV
5.80nS	5.49mV	9.93mV	15.65mV
6.00nS	3.06mV	6.30mV	11.70mV
6.20nS	1.82mV	4.27mV	6.64mV
6.40nS	1.09mV	2.24mV	4.15mV
6.60nS	0.61mV	1.46mV	2.31mV
6.80nS	0.54mV	1.08mV	1.05mV
7.00nS	0.47mV	0.78mV	0.76mV
7.20nS	0.42mV	0.69mV	0.48mV
7.40nS	0.35mV	0.59mV	0.37mV
7.60nS	0.31mV	0.52mV	0.31mV
7.80nS	0.29mV	0.48mV	0.29mV
8.00nS	0.27mV	0.45mV	0.26mV

```
   8.20nS          0.24mV              0.40mV              0.24mV
   8.40nS          0.20mV              0.35mV              0.21mV
   8.60nS          0.18mV              0.32mV              0.18mV
   8.80nS          0.18mV              0.31mV              0.16mV
   9.00nS          0.17mV              0.28mV              0.16mV
   9.20nS          0.15mV              0.24mV              0.15mV
   9.40nS          0.12mV              0.20mV              0.12mV
   9.60nS          0.10mV              0.19mV             93.74uV
   9.80nS          0.11mV              0.20mV             90.71uV
  10.00nS          0.11mV              0.17mV             97.83uV
|
[Falling Waveform]
R_fixture = 50.00
V_fixture = 3.30
V_fixture_min = 3.00
V_fixture_max = 3.60
L_fixture = 0.000H
C_fixture = 0.000F
| time           V(typ)              V(min)              V(max)
|
  0.000S           3.30V               3.00V               3.60V
   0.20nS          3.30V               3.00V               3.60V
   0.40nS          3.30V               3.00V               3.60V
   0.60nS          3.30V               3.00V               3.59V
   0.80nS          3.30V               3.00V               3.52V
   1.00nS          3.25V               3.00V               3.43V
   1.20nS          3.17V               3.00V               3.34V
   1.40nS          3.12V               3.00V               3.27V
   1.60nS          3.05V               3.00V               3.17V
   1.80nS          2.97V               2.97V               3.06V
   2.00nS          2.87V               2.92V               2.95V
   2.20nS          2.78V               2.87V               2.83V
   2.40nS          2.68V               2.82V               2.70V
   2.60nS          2.58V               2.76V               2.58V
   2.80nS          2.45V               2.69V               2.43V
   3.00nS          2.34V               2.62V               2.30V
   3.20nS          2.26V               2.57V               2.21V
   3.40nS          2.17V               2.50V               2.07V
   3.60nS          2.07V               2.44V               1.91V
   3.80nS          1.98V               2.38V               1.76V
   4.00nS          1.89V               2.32V               1.62V
   4.20nS          1.76V               2.25V               1.49V
   4.40nS          1.63V               2.18V               1.37V
   4.60nS          1.55V               2.15V               1.32V
```

```
   4.80nS          1.48V                2.11V                1.27V
   5.00nS          1.40V                2.06V                1.21V
   5.20nS          1.32V                2.01V                1.16V
   5.40nS          1.25V                1.96V                1.10V
   5.60nS          1.19V                1.92V                1.06V
   5.80nS          1.15V                1.89V                1.04V
   6.00nS          1.13V                1.87V                1.02V
   6.20nS          1.10V                1.84V                1.00V
   6.40nS          1.07V                1.81V                0.98V
   6.60nS          1.05V                1.78V                0.96V
   6.80nS          1.03V                1.75V                0.95V
   7.00nS          1.02V                1.72V                0.94V
   7.20nS          1.01V                1.70V                0.93V
   7.40nS          1.00V                1.67V                0.93V
   7.60nS          1.00V                1.64V                0.92V
   7.80nS          1.00V                1.62V                0.92V
   8.00nS          1.00V                1.60V                0.92V
   8.20nS          0.99V                1.57V                0.92V
   8.40nS          0.99V                1.53V                0.92V
   8.60nS          0.99V                1.50V                0.92V
   8.80nS          0.99V                1.47V                0.92V
   9.00nS          0.99V                1.44V                0.92V
   9.20nS          0.99V                1.42V                0.92V
   9.40nS          0.99V                1.40V                0.92V
   9.60nS          0.99V                1.38V                0.92V
   9.80nS          0.99V                1.37V                0.92V
  10.00nS          0.99V                1.36V                0.92V
|
| End [Model] prd16dgz
|
|*********************************************************************
|                             Model prd24dgz
|*********************************************************************
|
[Model]          prd24dgz
Model_type       I/O
Polarity         Non-Inverting
Enable           Active-Low
Vinl =   0.80V
Vinh =   2.00V
Vmeas =   1.50V
Cref =  50.00pF
Rref =   1.00M
Vref =  0.000V
```

```
C_comp          4.15pF              3.73pF              4.56pF
|
|
[Temperature Range]       25.00               0.12k               0.000
[Pullup Reference]        3.30V               3.00V               3.60V
[Pulldown Reference]      0.000V              0.000V              0.000V
[POWER Clamp Reference]   5.00V               4.50V               5.50V
[GND Clamp Reference]     0.000V              0.000V              0.000V
[Pulldown]
| voltage     I(typ)              I(min)              I(max)
|
  -3.30      -10.00mA             0.000A              0.000A
  -3.10       0.000A              0.000A             -10.00mA
  -2.90       0.000A              0.000A              0.000A
  -2.70       0.000A              0.000A              0.000A
  -2.50       0.000A              0.000A              0.000A
  -2.30       0.000A              0.000A             -10.00mA
  -2.10      -10.00mA             0.000A             -10.00mA
  -1.90      -10.00mA             0.000A             -10.00mA
  -1.70      -10.00mA            -10.00mA            -10.00mA
  -1.50      -10.00mA            -10.00mA            -20.00mA
  -1.00      -19.00mA            -10.00mA            -23.00mA
  -0.90      -21.00mA            -10.00mA            -26.00mA
  -0.80      -41.70mA            -11.00mA            -55.33mA
  -0.70      -50.61mA            -14.60mA            -55.12mA
  -0.60      -46.07mA            -25.10mA            -50.21mA
  -0.50      -39.45mA            -26.37mA            -43.90mA
  -0.40      -32.03mA            -22.06mA            -36.08mA
  -0.30      -24.29mA            -16.63mA            -27.48mA
  -0.20      -16.36mA            -11.11mA            -18.57mA
  -0.10       -8.26mA             -5.55mA             -9.40mA
  -0.00        3.80nA              7.33nA             12.06nA
   0.10        8.11mA              5.36mA              9.30mA
   0.20       15.76mA             10.37mA             18.18mA
   0.30       22.98mA             15.05mA             26.64mA
   0.40       29.76mA             19.40mA             34.69mA
   0.50       36.11mA             23.42mA             42.32mA
   0.60       42.04mA             27.12mA             49.54mA
   0.70       47.55mA             30.50mA             56.36mA
   0.80       52.66mA             33.58mA             62.78mA
   0.90       57.35mA             36.36mA             68.80mA
   1.00       61.65mA             38.84mA             74.42mA
   1.10       65.55mA             41.04mA             79.65mA
   1.20       69.06mA             42.96mA             84.48mA
```

```
   1.30        72.19mA              44.61mA              88.92mA
   1.40        74.94mA              45.99mA              92.97mA
   1.50        77.32mA              47.12mA              96.63mA
   1.60        79.33mA              48.01mA              99.91mA
   1.70        80.95mA              48.68mA               0.10A
   1.80        82.19mA              49.17mA               0.11A
   1.90        83.09mA              49.54mA               0.11A
   2.00        83.74mA              49.83mA               0.11A
   2.10        84.23mA              50.06mA               0.11A
   2.20        84.62mA              50.25mA               0.11A
   2.30        84.93mA              50.42mA               0.11A
   2.40        85.20mA              50.57mA               0.11A
   2.50        85.44mA              50.70mA               0.11A
   2.60        85.65mA              50.82mA               0.11A
   2.70        85.84mA              50.93mA               0.11A
   2.80        86.01mA              51.03mA               0.11A
   2.90        86.18mA              51.13mA               0.11A
   3.00        86.33mA              51.22mA               0.11A
   3.10        86.48mA              51.31mA               0.11A
   3.20        86.62mA              51.40mA               0.11A
   3.30        86.75mA              51.50mA               0.11A
   3.40        86.89mA              51.73mA               0.12A
   3.50        87.06mA              52.32mA               0.12A
   3.60        87.16mA              53.14mA               0.12A
   3.70        87.30mA              54.02mA               0.12A
   3.80        87.47mA              54.48mA               0.12A
   3.90        87.77mA              52.16mA               0.12A
   4.00        88.66mA              52.28mA               0.12A
   4.10        90.00mA              52.42mA               0.12A
   4.20        91.34mA              52.58mA               0.12A
   4.30        89.39mA              52.77mA               0.12A
   4.50        89.66mA              53.24mA               0.12A
   4.70        90.64mA              53.86mA               0.12A
   4.90        91.94mA              54.68mA               0.12A
   5.10        93.66mA              55.73mA               0.12A
   5.30        95.77mA              57.03mA               0.13A
   5.50        98.33mA              58.59mA               0.13A
   5.70         0.10A               60.44mA               0.13A
   5.90         0.10A               62.55mA               0.14A
   6.10         0.11A               64.93mA               0.14A
   6.60         0.12A               71.83mA               0.15A
|
[Pullup]
| voltage     I(typ)              I(min)              I(max)
```

-3.30	0.22A	0.16A	0.25A
-3.10	0.21A	0.16A	0.24A
-2.90	0.20A	0.15A	0.23A
-2.70	0.19A	0.14A	0.22A
-2.50	0.18A	0.14A	0.21A
-2.30	0.17A	0.13A	0.20A
-2.10	0.16A	0.12A	0.19A
-1.90	0.15A	0.11A	0.17A
-1.70	0.14A	0.10A	0.16A
-1.50	0.12A	90.15mA	0.14A
-1.00	92.80mA	62.50mA	0.11A
-0.90	84.30mA	57.02mA	97.94mA
-0.80	75.06mA	54.41mA	87.24mA
-0.70	65.63mA	47.70mA	76.50mA
-0.60	56.31mA	40.65mA	66.14mA
-0.50	47.22mA	33.53mA	55.68mA
-0.40	38.00mA	26.51mA	44.96mA
-0.30	28.62mA	19.71mA	34.00mA
-0.20	19.12mA	13.04mA	22.83mA
-0.10	9.57mA	6.46mA	11.50mA
0.00	34.08uA	11.19uA	71.92uA
0.10	-9.20mA	-6.16mA	-11.08mA
0.20	-17.92mA	-11.98mA	-21.68mA
0.30	-26.12mA	-17.45mA	-31.71mA
0.40	-33.83mA	-22.56mA	-41.21mA
0.50	-41.04mA	-27.33mA	-50.17mA
0.60	-47.76mA	-31.76mA	-58.60mA
0.70	-54.01mA	-35.85mA	-66.51mA
0.80	-59.78mA	-39.61mA	-73.91mA
0.90	-65.10mA	-43.04mA	-80.81mA
1.00	-69.96mA	-46.14mA	-87.22mA
1.10	-74.37mA	-48.91mA	-93.14mA
1.20	-78.35mA	-51.37mA	-98.58mA
1.30	-81.89mA	-53.51mA	-0.10A
1.40	-85.01mA	-55.34mA	-0.11A
1.50	-87.72mA	-56.87mA	-0.11A
1.60	-90.01mA	-58.11mA	-0.12A
1.70	-91.93mA	-59.08mA	-0.12A
1.80	-93.48mA	-59.83mA	-0.12A
1.90	-94.74mA	-60.42mA	-0.12A
2.00	-95.77mA	-60.91mA	-0.13A
2.10	-96.63mA	-61.34mA	-0.13A
2.20	-97.36mA	-61.71mA	-0.13A

```
   2.30      -97.99mA            -62.05mA            -0.13A
   2.40      -98.55mA            -62.36mA            -0.13A
   2.50      -99.04mA            -62.64mA            -0.13A
   2.60      -99.49mA            -62.90mA            -0.13A
   2.70      -99.89mA            -63.14mA            -0.13A
   2.80       -0.10A             -63.36mA            -0.13A
   2.90       -0.10A             -63.57mA            -0.13A
   3.00       -0.10A             -63.78mA            -0.13A
   3.10       -0.10A             -63.97mA            -0.14A
   3.20       -0.10A             -64.15mA            -0.14A
   3.30       -0.10A             -64.35mA            -0.14A
   3.40       -0.10A             -64.99mA            -0.14A
   3.50       -0.10A             -72.69mA            -0.14A
   3.60       -0.10A              -0.17A             -0.14A
   3.70       -0.10A              -0.97A             -0.14A
   3.80       -0.10A              -2.72A             -0.14A
   3.90       -0.11A              -4.50A             -0.14A
   4.00       -0.12A              -6.28A             -0.14A
   4.10       -0.34A              -8.06A             -0.14A
   4.20       -1.90A              -9.85A             -0.14A
   4.30       -3.94A             -11.62A             -0.15A
   4.50       -8.02A             -15.19A             -1.21A
   4.70      -12.10A             -18.75A             -5.43A
   4.90      -16.18A             -22.31A             -9.67A
   5.10      -20.27A             -25.88A            -13.90A
   5.30      -24.35A             -29.44A            -18.14A
   5.50      -28.43A             -33.00A            -22.38A
   5.70      -32.51A             -36.56A            -26.62A
   5.90      -36.60A             -40.13A            -30.86A
   6.10      -40.68A             -43.69A            -35.09A
   6.60      -50.89A             -52.59A            -45.69A
|
[GND_clamp]
| voltage     I(typ)              I(min)              I(max)
|
  -5.00      -85.26A             -77.43A            -87.91A
  -4.80      -81.20A             -73.87A            -83.67A
  -4.60      -77.14A             -70.31A            -79.43A
  -4.40      -73.08A             -66.75A            -75.19A
  -4.20      -69.02A             -63.19A            -70.95A
  -4.00      -64.96A             -59.63A            -66.71A
  -3.80      -60.90A             -56.07A            -62.47A
  -3.60      -56.84A             -52.51A            -58.23A
  -3.40      -52.78A             -48.95A            -53.99A
```

```
  -3.20      -48.72A            -45.39A            -49.75A
  -3.00      -44.64A            -41.83A            -45.52A
  -2.80      -40.56A            -38.27A            -41.29A
  -2.60      -36.48A            -34.71A            -37.05A
  -2.40      -32.40A            -31.15A            -32.82A
  -2.20      -28.32A            -27.59A            -28.58A
  -2.00      -24.24A            -24.03A            -24.35A
  -1.80      -20.16A            -20.47A            -20.11A
  -1.60      -16.08A            -16.90A            -15.88A
  -1.40      -12.00A            -13.34A            -11.64A
  -1.20       -7.92A             -9.78A             -7.41A
  -1.00       -3.84A             -6.22A             -3.18A
  -0.80       -0.23A             -2.66A            -71.67mA
  -0.60       -2.33mA            -0.10A             -6.23mA
  -0.40      -91.55uA            -0.52mA            -0.28mA
  -0.20      -27.91uA           -14.70uA           -42.94uA
  -0.00      -75.80nA           -77.03nA           -90.19nA
   0.20       18.72uA             7.32uA            32.29uA
   0.40       29.20uA            10.26uA            54.13uA
   0.60       32.50uA            10.68uA            65.79uA
   0.80       33.08uA            10.79uA            69.34uA
   1.00       33.30uA            10.86uA            70.18uA
   1.20       33.45uA            10.92uA            70.55uA
   1.40       33.57uA            10.98uA            70.80uA
   1.60       33.68uA            11.03uA            71.00uA
   1.80       33.78uA            11.07uA            71.16uA
   2.00       33.87uA            11.11uA            71.32uA
   2.20       33.96uA            11.14uA            71.47uA
   2.40       34.01uA            11.15uA            71.61uA
   2.60       34.03uA            11.16uA            71.76uA
   2.80       34.04uA            11.17uA            71.84uA
   3.00       34.05uA            11.18uA            71.86uA
   3.20       34.06uA            11.75uA            71.88uA
   3.40       34.08uA            10.69uA            71.90uA
   3.60       34.10uA             9.63uA            71.92uA
   3.80       34.12uA             8.57uA            71.94uA
   4.00       34.14uA             7.51uA            71.96uA
   4.20       34.16uA             6.45uA            71.98uA
   4.40       34.18uA             5.39uA            72.00uA
   4.60       34.20uA             4.33uA            72.02uA
   4.80       34.22uA             3.27uA            72.04uA
   5.00       34.24uA             2.21uA            72.06uA
|
[POWER_clamp]
```

```
| voltage     I(typ)              I(min)              I(max)
|
  -5.00       48.55uA             16.31uA             95.55uA
  -4.90       48.22uA             16.19uA             95.05uA
  -4.80       47.89uA             16.07uA             94.55uA
  -4.70       47.56uA             15.95uA             94.05uA
  -4.60       47.23uA             15.83uA             93.55uA
  -4.50       46.90uA             15.71uA             93.05uA
  -4.40       46.57uA             15.59uA             92.55uA
  -4.30       46.24uA             15.47uA             92.05uA
  -4.20       45.91uA             15.35uA             91.55uA
  -4.10       45.58uA             15.23uA             91.05uA
  -4.00       45.25uA             15.11uA             90.55uA
  -3.90       44.92uA             14.99uA             90.05uA
  -3.80       44.59uA             14.87uA             89.55uA
  -3.70       44.26uA             14.75uA             89.05uA
  -3.60       43.93uA             14.63uA             88.55uA
  -3.50       43.60uA             14.51uA             88.05uA
  -3.40       43.27uA             14.39uA             87.55uA
  -3.30       42.94uA             14.27uA             87.05uA
  -3.20       42.61uA             14.15uA             86.55uA
  -3.10       42.28uA             14.03uA             86.05uA
  -3.00       41.95uA             13.91uA             85.55uA
  -2.90       41.62uA             13.79uA             85.05uA
  -2.80       41.29uA             13.67uA             84.55uA
  -2.70       40.96uA             13.55uA             84.05uA
  -2.60       40.63uA             13.43uA             83.55uA
  -2.50       40.30uA             13.31uA             83.05uA
  -2.40       39.97uA             13.19uA             82.55uA
  -2.30       39.64uA             13.07uA             82.05uA
  -2.20       39.31uA             12.95uA             81.55uA
  -2.10       38.98uA             12.83uA             81.05uA
  -2.00       38.65uA             12.71uA             80.55uA
  -1.90       38.32uA             12.59uA             80.05uA
  -1.80       37.99uA             12.47uA             79.55uA
  -1.70       37.66uA             12.35uA             79.05uA
  -1.60       37.33uA             12.23uA             78.55uA
  -1.50       37.00uA             12.13uA             78.05uA
  -1.40       36.69uA             12.03uA             77.55uA
  -1.30       36.40uA             11.94uA             77.05uA
  -1.20       36.13uA             11.85uA             76.55uA
  -1.10       35.88uA             11.78uA             76.05uA
  -1.00       35.64uA             11.71uA             75.55uA
  -0.90       35.43uA             11.64uA             75.08uA
```

```
  -0.80       35.24uA             11.59uA             74.65uA
  -0.70       35.07uA             11.54uA             74.26uA
  -0.60       34.92uA             11.49uA             73.91uA
  -0.50       34.79uA             11.45uA             73.60uA
  -0.40       34.67uA             11.42uA             73.32uA
  -0.30       34.57uA             11.39uA             73.08uA
  -0.20       34.49uA             11.37uA             72.88uA
  -0.10       34.42uA             11.35uA             72.70uA
   0.00       34.36uA             11.33uA             72.56uA
|
[Ramp]
| variable       typ                 min                 max
dV/dt_r          1.54/2.22n          1.20/2.88n          1.77/2.15n
dV/dt_f          1.52/3.16n          1.15/4.46n          1.73/3.00n
R_load = 50.00
|
[Rising Waveform]
R_fixture = 50.00
V_fixture = 0.000
V_fixture_min = 0.000
V_fixture_max = 0.000
L_fixture = 0.000H
C_fixture = 0.000F
| time           V(typ)              V(min)              V(max)
|
  0.000S          0.70uV              0.92uV              0.68uV
   0.20nS         0.45uV              0.77uV             0.000V
   0.40nS        -5.49uV             -1.76uV             16.07uV
   0.60nS        -0.25mV             -4.97uV             -2.66mV
   0.80nS        -2.88mV             24.27uV             -5.55mV
   1.00nS        -3.85mV             -5.54uV             32.40mV
   1.20nS        18.80mV             -0.76mV             80.52mV
   1.40nS        45.63mV             -3.09mV              0.11V
   1.60nS        80.05mV             -6.58mV              0.16V
   1.80nS         0.11V              -0.18mV              0.21V
   2.00nS         0.16V              21.52mV              0.27V
   2.20nS         0.20V              48.21mV              0.33V
   2.40nS         0.26V              76.15mV              0.41V
   2.60nS         0.32V               0.11V               0.48V
   2.80nS         0.41V               0.16V               0.61V
   3.00nS         0.51V               0.19V               0.73V
   3.20nS         0.58V               0.24V               0.82V
   3.40nS         0.71V               0.30V               0.97V
   3.60nS         0.85V               0.36V               1.16V
```

```
   3.80nS          1.00V                0.45V                1.35V
   4.00nS          1.17V                0.54V                1.55V
   4.20nS          1.38V                0.67V                1.80V
   4.40nS          1.57V                0.80V                2.03V
   4.60nS          1.68V                0.88V                2.15V
   4.80nS          1.78V                0.96V                2.26V
   5.00nS          1.91V                1.06V                2.39V
   5.20nS          2.01V                1.15V                2.51V
   5.40nS          2.13V                1.25V                2.61V
   5.60nS          2.22V                1.34V                2.70V
   5.80nS          2.27V                1.40V                2.74V
   6.00nS          2.31V                1.44V                2.77V
   6.20nS          2.35V                1.50V                2.80V
   6.40nS          2.38V                1.56V                2.82V
   6.60nS          2.41V                1.61V                2.84V
   6.80nS          2.43V                1.66V                2.86V
   7.00nS          2.45V                1.70V                2.87V
   7.20nS          2.46V                1.74V                2.88V
   7.40nS          2.48V                1.78V                2.89V
   7.60nS          2.49V                1.82V                2.90V
   7.80nS          2.50V                1.84V                2.91V
   8.00nS          2.51V                1.86V                2.91V
   8.20nS          2.52V                1.88V                2.92V
   8.40nS          2.52V                1.90V                2.92V
   8.60nS          2.53V                1.92V                2.92V
   8.80nS          2.54V                1.93V                2.93V
   9.00nS          2.54V                1.95V                2.93V
   9.20nS          2.55V                1.96V                2.94V
   9.40nS          2.55V                1.97V                2.94V
   9.60nS          2.56V                1.98V                2.94V
   9.80nS          2.56V                2.00V                2.95V
  10.00nS          2.57V                2.00V                2.95V
|
[Rising Waveform]
R_fixture = 50.00
V_fixture = 3.30
V_fixture_min = 3.00
V_fixture_max = 3.60
L_fixture = 0.000H
C_fixture = 0.000F
| time           V(typ)              V(min)              V(max)
|
  0.000S          0.76V                1.03V                0.72V
   0.20nS         0.76V                1.03V                0.72V
```

0.40nS	0.76V	1.03V	0.72V
0.60nS	0.76V	1.03V	0.72V
0.80nS	0.77V	1.03V	0.73V
1.00nS	0.81V	1.03V	0.82V
1.20nS	0.90V	1.03V	0.93V
1.40nS	0.98V	1.04V	1.01V
1.60nS	1.09V	1.11V	1.13V
1.80nS	1.22V	1.20V	1.26V
2.00nS	1.35V	1.32V	1.42V
2.20nS	1.51V	1.45V	1.58V
2.40nS	1.69V	1.59V	1.78V
2.60nS	1.91V	1.74V	2.02V
2.80nS	2.22V	1.96V	2.36V
3.00nS	2.47V	2.16V	2.63V
3.20nS	2.65V	2.31V	2.82V
3.40nS	2.85V	2.49V	3.03V
3.60nS	2.97V	2.62V	3.17V
3.80nS	3.08V	2.73V	3.30V
4.00nS	3.14V	2.83V	3.36V
4.20nS	3.19V	2.89V	3.42V
4.40nS	3.23V	2.94V	3.47V
4.60nS	3.25V	2.95V	3.50V
4.80nS	3.27V	2.97V	3.52V
5.00nS	3.28V	2.98V	3.54V
5.20nS	3.29V	2.99V	3.56V
5.40nS	3.29V	2.99V	3.57V
5.60nS	3.30V	3.00V	3.58V
5.80nS	3.30V	3.00V	3.59V
6.00nS	3.30V	3.00V	3.59V
6.20nS	3.30V	3.00V	3.59V
6.40nS	3.30V	3.00V	3.60V
6.60nS	3.30V	3.00V	3.60V
6.80nS	3.30V	3.00V	3.60V
7.00nS	3.30V	3.00V	3.60V
7.20nS	3.30V	3.00V	3.60V
7.40nS	3.30V	3.00V	3.60V
7.60nS	3.30V	3.00V	3.60V
7.80nS	3.30V	3.00V	3.60V
8.00nS	3.30V	3.00V	3.60V
8.20nS	3.30V	3.00V	3.60V
8.40nS	3.30V	3.00V	3.60V
8.60nS	3.30V	3.00V	3.60V
8.80nS	3.30V	3.00V	3.60V
9.00nS	3.30V	3.00V	3.60V

```
   9.20nS         3.30V              3.00V              3.60V
   9.40nS         3.30V              3.00V              3.60V
   9.60nS         3.30V              3.00V              3.60V
   9.80nS         3.30V              3.00V              3.60V
  10.00nS         3.30V              3.00V              3.60V
|
[Falling Waveform]
R_fixture = 50.00
V_fixture = 0.000
V_fixture_min = 0.000
V_fixture_max = 0.000
L_fixture = 0.000H
C_fixture = 0.000F
| time           V(typ)             V(min)             V(max)
|
  0.000S          2.62V              2.12V              2.99V
   0.20nS         2.62V              2.12V              2.99V
   0.40nS         2.62V              2.12V              2.99V
   0.60nS         2.62V              2.12V              2.96V
   0.80nS         2.60V              2.12V              2.85V
   1.00nS         2.50V              2.12V              2.72V
   1.20nS         2.38V              2.11V              2.59V
   1.40nS         2.29V              2.09V              2.50V
   1.60nS         2.17V              2.04V              2.36V
   1.80nS         2.04V              1.96V              2.20V
   2.00nS         1.89V              1.85V              2.00V
   2.20nS         1.71V              1.74V              1.76V
   2.40nS         1.51V              1.63V              1.49V
   2.60nS         1.27V              1.50V              1.23V
   2.80nS         0.99V              1.33V              0.98V
   3.00nS         0.81V              1.17V              0.83V
   3.20nS         0.71V              1.04V              0.75V
   3.40nS         0.59V              0.87V              0.66V
   3.60nS         0.51V              0.72V              0.57V
   3.80nS         0.44V              0.59V              0.50V
   4.00nS         0.37V              0.49V              0.45V
   4.20nS         0.31V              0.40V              0.38V
   4.40nS         0.26V              0.33V              0.32V
   4.60nS         0.23V              0.28V              0.29V
   4.80nS         0.20V              0.25V              0.26V
   5.00nS         0.17V              0.21V              0.23V
   5.20nS         0.15V              0.18V              0.20V
   5.40nS         0.12V              0.14V              0.17V
   5.60nS        92.71mV             0.11V              0.14V
```

```
   5.80nS        79.46mV              96.17mV              0.12V
   6.00nS        67.17mV              83.01mV              0.11V
   6.20nS        54.74mV              65.86mV             89.82mV
   6.40nS        42.77mV              53.06mV             75.55mV
   6.60nS        33.26mV              41.31mV             61.63mV
   6.80nS        25.46mV              31.29mV             50.25mV
   7.00nS        18.21mV              23.99mV             40.51mV
   7.20nS        13.43mV              16.92mV             31.37mV
   7.40nS         8.06mV              11.32mV             23.11mV
   7.60nS         4.81mV               6.46mV             15.54mV
   7.80nS         3.27mV               4.82mV             12.49mV
   8.00nS         1.98mV               3.62mV              9.63mV
   8.20nS         1.32mV               2.10mV              6.17mV
   8.40nS         0.78mV               1.45mV              4.24mV
   8.60nS         0.50mV               1.01mV              2.46mV
   8.80nS         0.42mV               0.70mV              1.45mV
   9.00nS         0.34mV               0.61mV              0.94mV
   9.20nS         0.30mV               0.51mV              0.50mV
   9.40nS         0.27mV               0.45mV              0.38mV
   9.60nS         0.24mV               0.40mV              0.28mV
   9.80nS         0.21mV               0.35mV              0.23mV
  10.00nS         0.22mV               0.32mV              0.21mV
|
[Falling Waveform]
R_fixture = 50.00
V_fixture = 3.30
V_fixture_min = 3.00
V_fixture_max = 3.60
L_fixture = 0.000H
C_fixture = 0.000F
| time           V(typ)               V(min)               V(max)
|
  0.000S          3.30V                3.00V                3.60V
   0.20nS         3.30V                3.00V                3.60V
   0.40nS         3.30V                3.00V                3.60V
   0.60nS         3.30V                3.00V                3.59V
   0.80nS         3.30V                3.00V                3.52V
   1.00nS         3.25V                3.00V                3.44V
   1.20nS         3.18V                3.00V                3.37V
   1.40nS         3.14V                3.00V                3.32V
   1.60nS         3.09V                3.00V                3.24V
   1.80nS         3.03V                2.97V                3.16V
   2.00nS         2.96V                2.92V                3.07V
   2.20nS         2.88V                2.88V                2.98V
```

```
   2.40nS          2.80V                2.84V                2.88V
   2.60nS          2.72V                2.80V                2.78V
   2.80nS          2.61V                2.74V                2.65V
   3.00nS          2.51V                2.68V                2.55V
   3.20nS          2.44V                2.64V                2.47V
   3.40nS          2.34V                2.58V                2.35V
   3.60nS          2.25V                2.52V                2.23V
   3.80nS          2.15V                2.46V                2.09V
   4.00nS          2.06V                2.39V                1.93V
   4.20nS          1.93V                2.32V                1.75V
   4.40nS          1.81V                2.24V                1.58V
   4.60nS          1.73V                2.20V                1.50V
   4.80nS          1.65V                2.15V                1.43V
   5.00nS          1.54V                2.09V                1.34V
   5.20nS          1.44V                2.04V                1.26V
   5.40nS          1.32V                1.97V                1.18V
   5.60nS          1.23V                1.91V                1.11V
   5.80nS          1.18V                1.87V                1.07V
   6.00nS          1.13V                1.84V                1.04V
   6.20nS          1.08V                1.79V                1.00V
   6.40nS          1.04V                1.75V                0.96V
   6.60nS          1.00V                1.71V                0.92V
   6.80nS          0.96V                1.67V                0.89V
   7.00nS          0.93V                1.63V                0.87V
   7.20nS          0.90V                1.59V                0.84V
   7.40nS          0.87V                1.54V                0.82V
   7.60nS          0.85V                1.48V                0.80V
   7.80nS          0.83V                1.44V                0.78V
   8.00nS          0.82V                1.40V                0.78V
   8.20nS          0.81V                1.35V                0.76V
   8.40nS          0.80V                1.31V                0.75V
   8.60nS          0.79V                1.27V                0.75V
   8.80nS          0.78V                1.23V                0.74V
   9.00nS          0.78V                1.20V                0.73V
   9.20nS          0.78V                1.17V                0.73V
   9.40nS          0.77V                1.15V                0.73V
   9.60nS          0.77V                1.12V                0.72V
   9.80nS          0.77V                1.10V                0.72V
  10.00nS          0.77V                1.09V                0.72V
|
| End [Model] prd24dgz
|
|*****************************************************************************
|                                Model prt24dgz
```

```
|*********************************************************************
|
[Model]          prt24dgz
Model_type       3-state
Polarity         Non-Inverting
Enable           Active-Low
Vmeas =   1.50V
Cref =  50.00pF
Rref =   1.00M
Vref =  0.000V
C_comp           4.09pF              3.68pF              4.50pF
|
|
[Temperature Range]       25.00               0.12k               0.000
[Pullup Reference]        3.30V               3.00V               3.60V
[Pulldown Reference]      0.000V              0.000V              0.000V
[POWER Clamp Reference]   5.00V               4.50V               5.50V
[GND Clamp Reference]     0.000V              0.000V              0.000V
[Pulldown]
| voltage     I(typ)              I(min)              I(max)
|
  -3.30      -10.00mA             0.000A              0.000A
  -3.10       0.000A              0.000A             -10.00mA
  -2.90       0.000A              0.000A              0.000A
  -2.70       0.000A              0.000A              0.000A
  -2.50       0.000A              0.000A              0.000A
  -2.30       0.000A              0.000A             -10.00mA
  -2.10      -10.00mA             0.000A             -10.00mA
  -1.90      -10.00mA             0.000A             -10.00mA
  -1.70      -10.00mA            -10.00mA            -10.00mA
  -1.50      -10.00mA            -10.00mA            -20.00mA
  -1.00      -20.00mA            -10.00mA            -23.00mA
  -0.90      -21.00mA            -10.00mA            -26.00mA
  -0.80      -41.70mA            -12.00mA            -55.37mA
  -0.70      -50.60mA            -14.60mA            -55.11mA
  -0.60      -46.07mA            -25.10mA            -50.21mA
  -0.50      -39.45mA            -26.38mA            -43.90mA
  -0.40      -32.03mA            -22.06mA            -36.09mA
  -0.30      -24.30mA            -16.63mA            -27.49mA
  -0.20      -16.36mA            -11.10mA            -18.57mA
  -0.10       -8.26mA             -5.55mA             -9.40mA
  -0.00        3.97nA              7.41nA             12.45nA
   0.10        8.11mA              5.36mA              9.30mA
   0.20       15.76mA             10.38mA             18.18mA
```

0.30	22.98mA	15.05mA	26.64mA
0.40	29.76mA	19.40mA	34.68mA
0.50	36.11mA	23.42mA	42.32mA
0.60	42.04mA	27.11mA	49.54mA
0.70	47.55mA	30.50mA	56.36mA
0.80	52.65mA	33.58mA	62.78mA
0.90	57.35mA	36.36mA	68.80mA
1.00	61.64mA	38.84mA	74.42mA
1.10	65.54mA	41.04mA	79.65mA
1.20	69.06mA	42.96mA	84.48mA
1.30	72.18mA	44.61mA	88.92mA
1.40	74.93mA	45.99mA	92.97mA
1.50	77.31mA	47.12mA	96.63mA
1.60	79.32mA	48.01mA	99.91mA
1.70	80.95mA	48.68mA	0.10A
1.80	82.19mA	49.17mA	0.11A
1.90	83.08mA	49.54mA	0.11A
2.00	83.74mA	49.82mA	0.11A
2.10	84.23mA	50.06mA	0.11A
2.20	84.61mA	50.25mA	0.11A
2.30	84.93mA	50.42mA	0.11A
2.40	85.20mA	50.57mA	0.11A
2.50	85.43mA	50.70mA	0.11A
2.60	85.64mA	50.82mA	0.11A
2.70	85.83mA	50.93mA	0.11A
2.80	86.01mA	51.03mA	0.11A
2.90	86.17mA	51.13mA	0.11A
3.00	86.32mA	51.22mA	0.11A
3.10	86.47mA	51.31mA	0.11A
3.20	86.61mA	51.40mA	0.11A
3.30	86.75mA	51.50mA	0.11A
3.40	86.88mA	51.73mA	0.12A
3.50	87.01mA	52.32mA	0.12A
3.60	87.15mA	53.14mA	0.12A
3.70	87.30mA	54.01mA	0.12A
3.80	87.47mA	54.42mA	0.12A
3.90	87.77mA	52.16mA	0.12A
4.00	88.66mA	52.28mA	0.12A
4.10	90.00mA	52.42mA	0.12A
4.20	91.29mA	52.58mA	0.12A
4.30	89.03mA	52.77mA	0.12A
4.50	89.65mA	53.24mA	0.12A
4.70	90.63mA	53.86mA	0.12A
4.90	91.94mA	54.68mA	0.12A

```
   5.10        93.62mA              55.72mA              0.12A
   5.30        95.73mA              57.02mA              0.13A
   5.50        98.29mA              58.58mA              0.13A
   5.70         0.10A               60.42mA              0.13A
   5.90         0.10A               62.54mA              0.14A
   6.10         0.11A               64.92mA              0.14A
   6.60         0.12A               71.81mA              0.15A
|
[Pullup]
| voltage     I(typ)               I(min)               I(max)
|
  -3.30         0.22A                0.16A               0.25A
  -3.10         0.21A                0.16A               0.24A
  -2.90         0.20A                0.15A               0.23A
  -2.70         0.19A                0.14A               0.22A
  -2.50         0.18A                0.14A               0.21A
  -2.30         0.17A                0.13A               0.20A
  -2.10         0.16A                0.12A               0.18A
  -1.90         0.15A                0.11A               0.17A
  -1.70         0.14A                0.10A               0.16A
  -1.50         0.12A               90.13mA              0.14A
  -1.00        92.59mA              62.48mA              0.11A
  -0.90        84.26mA              56.95mA             97.88mA
  -0.80        75.03mA              54.36mA             87.19mA
  -0.70        65.60mA              47.69mA             76.45mA
  -0.60        56.28mA              40.63mA             66.08mA
  -0.50        47.19mA              33.52mA             55.62mA
  -0.40        37.96mA              26.49mA             44.89mA
  -0.30        28.58mA              19.70mA             33.93mA
  -0.20        19.09mA              13.03mA             22.76mA
  -0.10         9.54mA               6.45mA             11.43mA
   0.00         0.17uA               0.16uA              0.19uA
   0.10        -9.23mA              -6.17mA            -11.15mA
   0.20       -17.95mA             -11.99mA            -21.75mA
   0.30       -26.16mA             -17.46mA            -31.79mA
   0.40       -33.86mA             -22.57mA            -41.28mA
   0.50       -41.07mA             -27.35mA            -50.24mA
   0.60       -47.79mA             -31.77mA            -58.67mA
   0.70       -54.04mA             -35.86mA            -66.58mA
   0.80       -59.82mA             -39.62mA            -73.98mA
   0.90       -65.13mA             -43.05mA            -80.88mA
   1.00       -69.99mA             -46.15mA            -87.29mA
   1.10       -74.41mA             -48.92mA            -93.21mA
   1.20       -78.38mA             -51.38mA            -98.65mA
```

```
   1.30      -81.93mA            -53.52mA            -0.10A
   1.40      -85.05mA            -55.36mA            -0.11A
   1.50      -87.75mA            -56.88mA            -0.11A
   1.60      -90.05mA            -58.12mA            -0.12A
   1.70      -91.96mA            -59.09mA            -0.12A
   1.80      -93.52mA            -59.84mA            -0.12A
   1.90      -94.78mA            -60.43mA            -0.12A
   2.00      -95.80mA            -60.92mA            -0.13A
   2.10      -96.66mA            -61.35mA            -0.13A
   2.20      -97.39mA            -61.72mA            -0.13A
   2.30      -98.03mA            -62.06mA            -0.13A
   2.40      -98.58mA            -62.37mA            -0.13A
   2.50      -99.08mA            -62.65mA            -0.13A
   2.60      -99.52mA            -62.91mA            -0.13A
   2.70      -99.92mA            -63.15mA            -0.13A
   2.80       -0.10A             -63.37mA            -0.13A
   2.90       -0.10A             -63.58mA            -0.13A
   3.00       -0.10A             -63.78mA            -0.13A
   3.10       -0.10A             -63.96mA            -0.14A
   3.20       -0.10A             -64.14mA            -0.14A
   3.30       -0.10A             -64.33mA            -0.14A
   3.40       -0.10A             -64.95mA            -0.14A
   3.50       -0.10A             -72.61mA            -0.14A
   3.60       -0.10A              -0.17A             -0.14A
   3.70       -0.10A              -0.97A             -0.14A
   3.80       -0.10A              -2.72A             -0.14A
   3.90       -0.11A              -4.50A             -0.14A
   4.00       -0.12A              -6.28A             -0.14A
   4.10       -0.34A              -8.06A             -0.14A
   4.20       -1.90A              -9.85A             -0.14A
   4.30       -3.94A             -11.62A             -0.15A
   4.50       -8.02A             -15.19A             -1.20A
   4.70      -12.10A             -18.75A             -5.43A
   4.90      -16.18A             -22.31A             -9.67A
   5.10      -20.27A             -25.88A            -13.90A
   5.30      -24.35A             -29.44A            -18.14A
   5.50      -28.43A             -33.00A            -22.38A
   5.70      -32.51A             -36.56A            -26.62A
   5.90      -36.60A             -40.13A            -30.86A
   6.10      -40.68A             -43.69A            -35.09A
   6.60      -50.89A             -52.59A            -45.69A
|
[GND_clamp]
| voltage     I(typ)              I(min)              I(max)
```

|

-3.30	-50.75A	-47.17A	-51.87A
-3.20	-48.72A	-45.39A	-49.75A
-3.10	-46.68A	-43.61A	-47.63A
-3.00	-44.64A	-41.83A	-45.52A
-2.90	-42.60A	-40.05A	-43.40A
-2.80	-40.56A	-38.27A	-41.29A
-2.70	-38.52A	-36.49A	-39.17A
-2.60	-36.48A	-34.71A	-37.05A
-2.50	-34.44A	-32.93A	-34.94A
-2.40	-32.40A	-31.15A	-32.82A
-2.30	-30.36A	-29.37A	-30.70A
-2.20	-28.32A	-27.59A	-28.58A
-2.10	-26.28A	-25.81A	-26.47A
-2.00	-24.24A	-24.03A	-24.35A
-1.90	-22.20A	-22.25A	-22.23A
-1.80	-20.16A	-20.47A	-20.11A
-1.70	-18.12A	-18.68A	-18.00A
-1.60	-16.08A	-16.90A	-15.88A
-1.50	-14.04A	-15.12A	-13.76A
-1.40	-12.00A	-13.34A	-11.64A
-1.30	-9.96A	-11.56A	-9.53A
-1.20	-7.92A	-9.78A	-7.41A
-1.10	-5.88A	-8.00A	-5.29A
-1.00	-3.84A	-6.22A	-3.18A
-0.90	-1.80A	-4.44A	-1.07A
-0.80	-0.23A	-2.65A	-71.53mA
-0.70	-13.26mA	-0.90A	-13.93mA
-0.60	-2.23mA	-0.10A	-6.08mA
-0.50	-0.34mA	-7.99mA	-1.62mA
-0.40	-28.68uA	-0.48mA	-0.18mA
-0.30	-1.65uA	-27.22uA	-10.18uA
-0.20	-0.15uA	-1.61uA	-0.42uA
-0.10	-86.50nA	-0.17uA	-0.11uA
-0.00	-76.61nA	-77.36nA	-91.73nA
0.10	-68.52nA	-64.82nA	-83.30nA
0.20	-60.47nA	-56.49nA	-75.01nA
0.30	-52.43nA	-48.39nA	-66.73nA
0.40	-44.39nA	-40.30nA	-58.46nA
0.50	-36.35nA	-32.21nA	-50.19nA
0.60	-28.31nA	-24.12nA	-41.93nA
0.70	-20.27nA	-16.03nA	-33.68nA
0.80	-12.24nA	-7.94nA	-25.42nA
0.90	-4.20nA	0.15nA	-17.17nA

```
   1.00        3.83nA              8.23nA             -8.92nA
   1.10       11.86nA             16.32nA             -0.67nA
   1.20       19.89nA             24.41nA              7.58nA
   1.30       27.92nA             32.50nA             15.84nA
   1.40       35.95nA             40.59nA             24.10nA
   1.50       43.98nA             48.68nA             32.36nA
   1.60       52.00nA             56.77nA             40.64nA
   1.70       60.02nA             64.85nA             48.92nA
   1.80       68.04nA             72.94nA             57.21nA
   1.90       76.05nA             81.03nA             65.52nA
   2.00       84.05nA             89.12nA             73.85nA
   2.10       92.04nA             97.20nA             82.20nA
   2.20      100.00nA              0.11uA             90.59nA
   2.30        0.11uA              0.11uA             99.01nA
   2.40        0.12uA              0.12uA              0.11uA
   2.50        0.12uA              0.12uA              0.12uA
   2.60        0.13uA              0.13uA              0.12uA
   2.70        0.13uA              0.13uA              0.13uA
   2.80        0.14uA              0.13uA              0.14uA
   2.90        0.14uA              0.14uA              0.15uA
   3.00        0.15uA              0.15uA              0.15uA
   3.10        0.15uA              0.17uA              0.16uA
   3.20        0.15uA              0.56uA              0.16uA
   3.30        0.16uA              0.19uA              0.17uA
|
[POWER_clamp]
| voltage     I(typ)              I(min)              I(max)
|
  -3.30        0.37uA              0.37uA              0.40uA
  -3.20        0.37uA              0.36uA              0.39uA
  -3.10        0.36uA              0.36uA              0.39uA
  -3.00        0.35uA              0.35uA              0.38uA
  -2.90        0.35uA              0.34uA              0.37uA
  -2.80        0.34uA              0.34uA              0.37uA
  -2.70        0.33uA              0.33uA              0.36uA
  -2.60        0.33uA              0.33uA              0.36uA
  -2.50        0.32uA              0.32uA              0.35uA
  -2.40        0.32uA              0.31uA              0.34uA
  -2.30        0.31uA              0.31uA              0.34uA
  -2.20        0.30uA              0.30uA              0.33uA
  -2.10        0.30uA              0.29uA              0.32uA
  -2.00        0.29uA              0.29uA              0.32uA
  -1.90        0.28uA              0.28uA              0.31uA
  -1.80        0.28uA              0.28uA              0.30uA
```

```
  -1.70        0.27uA              0.27uA              0.30uA
  -1.60        0.27uA              0.26uA              0.29uA
  -1.50        0.26uA              0.26uA              0.29uA
  -1.40        0.25uA              0.25uA              0.28uA
  -1.30        0.25uA              0.25uA              0.27uA
  -1.20        0.24uA              0.24uA              0.27uA
  -1.10        0.24uA              0.23uA              0.26uA
  -1.00        0.23uA              0.23uA              0.25uA
  -0.90        0.22uA              0.22uA              0.25uA
  -0.80        0.22uA              0.22uA              0.24uA
  -0.70        0.21uA              0.21uA              0.24uA
  -0.60        0.21uA              0.20uA              0.23uA
  -0.50        0.20uA              0.20uA              0.22uA
  -0.40        0.20uA              0.19uA              0.22uA
  -0.30        0.19uA              0.19uA              0.21uA
  -0.20        0.48mA              0.56uA              0.72uA
  -0.10        0.16uA              0.17uA              0.18uA
   0.00        0.16uA              0.15uA              0.18uA

|
[Ramp]
| variable       typ                 min                 max
dV/dt_r          1.54/2.19n          1.20/2.87n          1.77/2.14n
dV/dt_f          1.52/3.15n          1.15/4.45n          1.73/3.01n
R_load = 50.00
|
[Rising Waveform]
R_fixture = 50.00
V_fixture = 0.000
V_fixture_min = 0.000
V_fixture_max = 0.000
L_fixture = 0.000H
C_fixture = 0.000F
| time           V(typ)              V(min)              V(max)
|
  0.000S          0.70uV              0.93uV              0.69uV
   0.20nS         0.46uV              0.77uV             0.000V
   0.40nS        -5.77uV             -1.75uV             11.67uV
   0.60nS        -0.27mV             -5.10uV             -2.79mV
   0.80nS        -2.96mV             26.03uV             -6.12mV
   1.00nS        -3.62mV             -5.61uV             32.64mV
   1.20nS        19.35mV             -0.80mV             81.12mV
   1.40nS        46.31mV             -3.19mV              0.11V
   1.60nS        79.98mV             -6.88mV              0.16V
```

```
   1.80nS          0.12V              -0.22mV              0.21V
   2.00nS          0.16V              21.89mV              0.27V
   2.20nS          0.20V              48.68mV              0.33V
   2.40nS          0.26V              76.62mV              0.41V
   2.60nS          0.32V               0.11V               0.49V
   2.80nS          0.42V               0.16V               0.61V
   3.00nS          0.51V               0.20V               0.73V
   3.20nS          0.58V               0.24V               0.82V
   3.40nS          0.71V               0.30V               0.99V
   3.60nS          0.85V               0.36V               1.17V
   3.80nS          1.01V               0.45V               1.36V
   4.00nS          1.18V               0.54V               1.56V
   4.20nS          1.38V               0.67V               1.81V
   4.40nS          1.57V               0.81V               2.03V
   4.60nS          1.69V               0.89V               2.16V
   4.80nS          1.79V               0.96V               2.27V
   5.00nS          1.91V               1.06V               2.40V
   5.20nS          2.03V               1.15V               2.52V
   5.40nS          2.14V               1.26V               2.61V
   5.60nS          2.24V               1.35V               2.70V
   5.80nS          2.28V               1.40V               2.74V
   6.00nS          2.31V               1.45V               2.77V
   6.20nS          2.36V               1.51V               2.80V
   6.40nS          2.39V               1.56V               2.83V
   6.60nS          2.41V               1.61V               2.85V
   6.80nS          2.43V               1.66V               2.86V
   7.00nS          2.45V               1.70V               2.87V
   7.20nS          2.46V               1.74V               2.88V
   7.40nS          2.48V               1.78V               2.89V
   7.60nS          2.49V               1.82V               2.90V
   7.80nS          2.50V               1.84V               2.91V
   8.00nS          2.51V               1.86V               2.91V
   8.20nS          2.52V               1.88V               2.92V
   8.40nS          2.52V               1.90V               2.92V
   8.60nS          2.53V               1.92V               2.93V
   8.80nS          2.54V               1.93V               2.93V
   9.00nS          2.54V               1.95V               2.93V
   9.20nS          2.55V               1.96V               2.94V
   9.40nS          2.55V               1.97V               2.94V
   9.60nS          2.56V               1.99V               2.94V
   9.80nS          2.56V               2.00V               2.95V
  10.00nS          2.57V               2.00V               2.95V
|
[Rising Waveform]
```

```
R_fixture = 50.00
V_fixture = 3.30
V_fixture_min = 3.00
V_fixture_max = 3.60
L_fixture = 0.000H
C_fixture = 0.000F
| time          V(typ)          V(min)          V(max)
|
  0.000S         0.76V           1.03V           0.72V
   0.20nS        0.76V           1.03V           0.72V
   0.40nS        0.76V           1.03V           0.72V
   0.60nS        0.76V           1.03V           0.72V
   0.80nS        0.77V           1.03V           0.73V
   1.00nS        0.81V           1.03V           0.82V
   1.20nS        0.90V           1.03V           0.93V
   1.40nS        0.98V           1.04V           1.02V
   1.60nS        1.10V           1.11V           1.13V
   1.80nS        1.22V           1.21V           1.26V
   2.00nS        1.36V           1.33V           1.42V
   2.20nS        1.53V           1.46V           1.58V
   2.40nS        1.72V           1.60V           1.80V
   2.60nS        1.93V           1.75V           2.04V
   2.80nS        2.23V           1.97V           2.36V
   3.00nS        2.48V           2.16V           2.62V
   3.20nS        2.66V           2.30V           2.82V
   3.40nS        2.85V           2.49V           3.04V
   3.60nS        2.97V           2.63V           3.19V
   3.80nS        3.09V           2.73V           3.29V
   4.00nS        3.14V           2.83V           3.36V
   4.20nS        3.19V           2.89V           3.42V
   4.40nS        3.23V           2.94V           3.47V
   4.60nS        3.25V           2.96V           3.50V
   4.80nS        3.27V           2.97V           3.52V
   5.00nS        3.28V           2.98V           3.54V
   5.20nS        3.29V           2.99V           3.56V
   5.40nS        3.29V           2.99V           3.57V
   5.60nS        3.30V           3.00V           3.58V
   5.80nS        3.30V           3.00V           3.59V
   6.00nS        3.30V           3.00V           3.59V
   6.20nS        3.30V           3.00V           3.60V
   6.40nS        3.30V           3.00V           3.60V
   6.60nS        3.30V           3.00V           3.60V
   6.80nS        3.30V           3.00V           3.60V
   7.00nS        3.30V           3.00V           3.60V
```

```
   7.20nS          3.30V                3.00V                3.60V
   7.40nS          3.30V                3.00V                3.60V
   7.60nS          3.30V                3.00V                3.60V
   7.80nS          3.30V                3.00V                3.60V
   8.00nS          3.30V                3.00V                3.60V
   8.20nS          3.30V                3.00V                3.60V
   8.40nS          3.30V                3.00V                3.60V
   8.60nS          3.30V                3.00V                3.60V
   8.80nS          3.30V                3.00V                3.60V
   9.00nS          3.30V                3.00V                3.60V
   9.20nS          3.30V                3.00V                3.60V
   9.40nS          3.30V                3.00V                3.60V
   9.60nS          3.30V                3.00V                3.60V
   9.80nS          3.30V                3.00V                3.60V
  10.00nS          3.30V                3.00V                3.60V
|
[Falling Waveform]
R_fixture = 50.00
V_fixture = 0.000
V_fixture_min = 0.000
V_fixture_max = 0.000
L_fixture = 0.000H
C_fixture = 0.000F
| time            V(typ)               V(min)               V(max)
|
  0.000S          2.62V                2.12V                2.99V
   0.20nS         2.62V                2.12V                2.99V
   0.40nS         2.62V                2.12V                2.99V
   0.60nS         2.62V                2.12V                2.96V
   0.80nS         2.60V                2.12V                2.85V
   1.00nS         2.50V                2.12V                2.72V
   1.20nS         2.37V                2.11V                2.59V
   1.40nS         2.29V                2.09V                2.50V
   1.60nS         2.17V                2.04V                2.36V
   1.80nS         2.04V                1.96V                2.20V
   2.00nS         1.89V                1.85V                2.00V
   2.20nS         1.71V                1.74V                1.75V
   2.40nS         1.50V                1.63V                1.48V
   2.60nS         1.28V                1.50V                1.24V
   2.80nS         1.01V                1.33V                1.01V
   3.00nS         0.82V                1.17V                0.82V
   3.20nS         0.72V                1.04V                0.75V
   3.40nS         0.61V                0.87V                0.65V
   3.60nS         0.51V                0.72V                0.57V
```

```
   3.80nS          0.44V                0.60V                0.50V
   4.00nS          0.38V                0.49V                0.44V
   4.20nS          0.32V                0.40V                0.38V
   4.40nS          0.26V                0.32V                0.32V
   4.60nS          0.23V                0.28V                0.29V
   4.80nS          0.21V                0.25V                0.26V
   5.00nS          0.17V                0.21V                0.23V
   5.20nS          0.15V                0.18V                0.20V
   5.40nS          0.12V                0.14V                0.17V
   5.60nS         93.14mV               0.11V                0.14V
   5.80nS         80.86mV              94.78mV               0.12V
   6.00nS         68.57mV              80.67mV               0.11V
   6.20nS         55.24mV              65.96mV              90.13mV
   6.40nS         43.92mV              51.39mV              74.96mV
   6.60nS         33.33mV              40.71mV              61.03mV
   6.80nS         25.91mV              31.19mV              50.31mV
   7.00nS         18.81mV              22.83mV              39.65mV
   7.20nS         13.52mV              17.13mV              31.61mV
   7.40nS          8.40mV              10.61mV              22.62mV
   7.60nS          4.73mV               6.73mV              15.75mV
   7.80nS          3.46mV               4.67mV              12.43mV
   8.00nS          2.19mV               3.16mV               9.14mV
   8.20nS          1.26mV               2.23mV               6.37mV
   8.40nS          0.84mV               1.32mV               4.12mV
   8.60nS          0.49mV               0.95mV               2.29mV
   8.80nS          0.41mV               0.74mV               1.55mV
   9.00nS          0.35mV               0.58mV               0.81mV
   9.20nS          0.31mV               0.51mV               0.53mV
   9.40nS          0.28mV               0.45mV               0.39mV
   9.60nS          0.24mV               0.40mV               0.27mV
   9.80nS          0.22mV               0.36mV               0.24mV
  10.00nS          0.20mV               0.32mV               0.21mV
|
[Falling Waveform]
R_fixture = 50.00
V_fixture = 3.30
V_fixture_min = 3.00
V_fixture_max = 3.60
L_fixture = 0.000H
C_fixture = 0.000F
| time           V(typ)               V(min)               V(max)
|
  0.000S          3.30V                3.00V                3.60V
   0.20nS         3.30V                3.00V                3.60V
```

0.40nS	3.30V	3.00V	3.60V
0.60nS	3.30V	3.00V	3.59V
0.80nS	3.30V	3.00V	3.52V
1.00nS	3.25V	3.00V	3.44V
1.20nS	3.18V	3.00V	3.37V
1.40nS	3.14V	3.00V	3.32V
1.60nS	3.09V	3.00V	3.24V
1.80nS	3.03V	2.97V	3.16V
2.00nS	2.96V	2.92V	3.07V
2.20nS	2.88V	2.88V	2.98V
2.40nS	2.80V	2.84V	2.88V
2.60nS	2.72V	2.80V	2.77V
2.80nS	2.60V	2.74V	2.64V
3.00nS	2.51V	2.68V	2.54V
3.20nS	2.44V	2.64V	2.46V
3.40nS	2.34V	2.58V	2.34V
3.60nS	2.25V	2.52V	2.22V
3.80nS	2.15V	2.46V	2.08V
4.00nS	2.05V	2.39V	1.92V
4.20nS	1.93V	2.32V	1.74V
4.40nS	1.81V	2.24V	1.58V
4.60nS	1.73V	2.19V	1.50V
4.80nS	1.65V	2.15V	1.42V
5.00nS	1.53V	2.09V	1.34V
5.20nS	1.43V	2.04V	1.26V
5.40nS	1.32V	1.97V	1.18V
5.60nS	1.22V	1.91V	1.11V
5.80nS	1.18V	1.87V	1.07V
6.00nS	1.13V	1.84V	1.03V
6.20nS	1.08V	1.79V	0.99V
6.40nS	1.03V	1.75V	0.95V
6.60nS	0.99V	1.70V	0.92V
6.80nS	0.96V	1.66V	0.89V
7.00nS	0.93V	1.63V	0.87V
7.20nS	0.90V	1.59V	0.84V
7.40nS	0.87V	1.53V	0.82V
7.60nS	0.84V	1.47V	0.80V
7.80nS	0.83V	1.44V	0.78V
8.00nS	0.82V	1.40V	0.78V
8.20nS	0.81V	1.35V	0.76V
8.40nS	0.80V	1.30V	0.75V
8.60nS	0.79V	1.26V	0.75V
8.80nS	0.78V	1.23V	0.74V
9.00nS	0.78V	1.19V	0.73V

```
   9.20nS         0.78V              1.17V              0.73V
   9.40nS         0.77V              1.14V              0.73V
   9.60nS         0.77V              1.12V              0.72V
   9.80nS         0.77V              1.10V              0.72V
  10.00nS         0.77V              1.08V              0.72V
|
| End [Model] prt24dgz
|
|*************************************************************************
|                              Model pdusdgz
|*************************************************************************
|
[Model]          pdusdgz
Model_type       Input
Polarity         Non-Inverting
Vinl =  0.000V
Vinh =   3.30V
C_comp           5.00pF             5.00pF             5.00pF
|
|
[Temperature Range]       25.00              0.12k              0.000
[Pullup Reference]        3.30V              3.00V              3.60V
[Pulldown Reference]      0.000V             0.000V             0.000V
[POWER Clamp Reference]   5.00V              4.50V              5.50V
[GND Clamp Reference]     0.000V             0.000V             0.000V
[GND_clamp]
| voltage     I(typ)             I(min)             I(max)
|
  -5.00      -64.63A            -59.13A            -66.41A
  -4.80      -61.55A            -56.41A            -63.21A
  -4.60      -58.47A            -53.69A            -60.01A
  -4.40      -55.39A            -50.97A            -56.81A
  -4.20      -52.31A            -48.25A            -53.61A
  -4.00      -49.23A            -45.53A            -50.41A
  -3.80      -46.15A            -42.81A            -47.21A
  -3.60      -43.07A            -40.09A            -44.01A
  -3.40      -39.99A            -37.37A            -40.81A
  -3.20      -36.91A            -34.65A            -37.61A
  -3.00      -33.82A            -31.94A            -34.41A
  -2.80      -30.73A            -29.22A            -31.22A
  -2.60      -27.64A            -26.51A            -28.02A
  -2.40      -24.56A            -23.79A            -24.82A
  -2.20      -21.47A            -21.08A            -21.62A
  -2.00      -18.38A            -18.36A            -18.42A
```

```
  -1.80      -15.29A            -15.64A            -15.22A
  -1.60      -12.20A            -12.93A            -12.03A
  -1.40       -9.12A            -10.21A             -8.83A
  -1.20       -6.03A             -7.50A             -5.63A
  -1.00       -2.94A             -4.78A             -2.43A
  -0.80       -0.20A             -2.07A            -64.17mA
  -0.60       -1.85mA           -96.40mA             -4.85mA
  -0.40      -83.24uA            -0.50mA             -0.23mA
  -0.20      -60.52uA           -36.82uA            -86.29uA
  -0.00      -60.40uA           -35.33uA            -85.95uA
   0.20      -60.32uA           -35.27uA            -85.85uA
   0.40      -60.23uA           -35.20uA            -85.73uA
   0.60      -60.11uA           -35.13uA            -85.57uA
   0.80      -59.96uA           -35.03uA            -85.37uA
   1.00      -59.74uA           -34.91uA            -85.08uA
   1.20      -59.32uA           -34.50uA            -84.56uA
   1.40      -58.35uA           -33.59uA            -83.44uA
   1.60      -56.47uA           -31.92uA            -81.36uA
   1.80      -53.57uA           -29.25uA            -78.20uA
   2.00      -49.55uA            -7.60uA            -73.89uA
   2.20      -43.70uA           -16.78nA            -68.43uA
   2.40       -3.73uA             0.10uA            -61.70uA
   2.60        0.10uA             0.11uA            -51.99uA
   2.80        0.12uA             0.12uA             -2.43uA
   3.00        0.13uA             0.13uA              0.13uA
   3.20        0.14uA             0.20uA              0.14uA
   3.40        0.15uA             0.15uA              0.15uA
   3.60        0.16uA            96.30nA              0.16uA
   3.80        0.17uA            43.50nA              0.17uA
   4.00        0.18uA            -9.30nA              0.18uA
   4.20        0.18uA           -62.10nA              0.19uA
   4.40        0.19uA            -0.11uA              0.20uA
   4.60        0.20uA            -0.17uA              0.21uA
   4.80        0.21uA            -0.22uA              0.22uA
   5.00        0.22uA            -0.27uA              0.23uA
|
[POWER_clamp]
| voltage     I(typ)             I(min)             I(max)
|
  -5.00        0.61uA             0.59uA              0.65uA
  -4.90        0.60uA             0.58uA              0.65uA
  -4.80        0.59uA             0.58uA              0.64uA
  -4.70        0.59uA             0.57uA              0.63uA
  -4.60        0.58uA             0.56uA              0.63uA
```

-4.50	0.57uA	0.56uA	0.62uA
-4.40	0.56uA	0.55uA	0.61uA
-4.30	0.56uA	0.54uA	0.60uA
-4.20	0.55uA	0.54uA	0.60uA
-4.10	0.54uA	0.53uA	0.59uA
-4.00	0.54uA	0.52uA	0.58uA
-3.90	0.53uA	0.52uA	0.58uA
-3.80	0.52uA	0.51uA	0.57uA
-3.70	0.52uA	0.50uA	0.56uA
-3.60	0.51uA	0.50uA	0.56uA
-3.50	0.50uA	0.49uA	0.55uA
-3.40	0.50uA	0.48uA	0.54uA
-3.30	0.49uA	0.48uA	0.53uA
-3.20	0.48uA	0.47uA	0.53uA
-3.10	0.48uA	0.46uA	0.52uA
-3.00	0.47uA	0.46uA	0.51uA
-2.90	0.46uA	0.45uA	0.51uA
-2.80	0.46uA	0.44uA	0.50uA
-2.70	0.45uA	0.44uA	0.49uA
-2.60	0.44uA	0.43uA	0.49uA
-2.50	0.44uA	0.42uA	0.48uA
-2.40	0.43uA	0.41uA	0.47uA
-2.30	0.42uA	0.41uA	0.46uA
-2.20	0.42uA	0.40uA	0.46uA
-2.10	0.41uA	0.39uA	0.45uA
-2.00	0.40uA	0.39uA	0.44uA
-1.90	0.39uA	0.38uA	0.44uA
-1.80	0.39uA	0.37uA	0.43uA
-1.70	0.38uA	0.37uA	0.42uA
-1.60	0.37uA	0.36uA	0.42uA
-1.50	0.37uA	0.35uA	0.41uA
-1.40	0.36uA	0.35uA	0.40uA
-1.30	0.35uA	0.34uA	0.39uA
-1.20	0.35uA	0.33uA	0.39uA
-1.10	0.34uA	0.33uA	0.38uA
-1.00	0.33uA	0.32uA	0.37uA
-0.90	0.33uA	0.31uA	0.37uA
-0.80	0.32uA	0.31uA	0.36uA
-0.70	0.31uA	0.30uA	0.35uA
-0.60	0.31uA	0.29uA	0.35uA
-0.50	0.30uA	0.29uA	0.34uA
-0.40	0.29uA	0.28uA	0.33uA
-0.30	0.29uA	0.27uA	0.32uA
-0.20	0.28uA	0.27uA	0.32uA

```
  -0.10        0.27uA              0.26uA              0.31uA
   0.00        0.27uA              0.25uA              0.30uA
|
| End [Model] pdusdgz
|
|*********************************************************************
|                              Model pdddgz
|*********************************************************************
|
[Model]          pdddgz
Model_type       Input
Polarity         Non-Inverting
Vinl =  0.000V
Vinh =   3.30V
C_comp           5.00pF              5.00pF              5.00pF
|
|
[Temperature Range]       25.00               0.12k               0.000
[Pullup Reference]        3.30V               3.00V               3.60V
[Pulldown Reference]      0.000V              0.000V              0.000V
[POWER Clamp Reference]   5.00V               4.50V               5.50V
[GND Clamp Reference]     0.000V              0.000V              0.000V
[GND_clamp]
| voltage     I(typ)              I(min)              I(max)
|
  -5.00      -64.63A             -59.13A             -66.41A
  -4.80      -61.55A             -56.41A             -63.21A
  -4.60      -58.47A             -53.69A             -60.01A
  -4.40      -55.39A             -50.97A             -56.81A
  -4.20      -52.31A             -48.25A             -53.61A
  -4.00      -49.23A             -45.53A             -50.41A
  -3.80      -46.15A             -42.81A             -47.21A
  -3.60      -43.07A             -40.09A             -44.01A
  -3.40      -39.99A             -37.37A             -40.81A
  -3.20      -36.91A             -34.65A             -37.61A
  -3.00      -33.82A             -31.94A             -34.41A
  -2.80      -30.73A             -29.22A             -31.22A
  -2.60      -27.64A             -26.51A             -28.02A
  -2.40      -24.56A             -23.79A             -24.82A
  -2.20      -21.47A             -21.08A             -21.62A
  -2.00      -18.38A             -18.36A             -18.42A
  -1.80      -15.29A             -15.64A             -15.22A
  -1.60      -12.20A             -12.93A             -12.03A
  -1.40       -9.12A             -10.21A              -8.83A
```

```
  -1.20       -6.03A              -7.50A              -5.63A
  -1.00       -2.94A              -4.78A              -2.43A
  -0.80       -0.20A              -2.07A             -64.21mA
  -0.60       -1.89mA            -96.41mA             -4.91mA
  -0.40      -85.69uA             -0.50mA             -0.24mA
  -0.20      -27.91uA            -14.61uA            -42.88uA
  -0.00      -87.50nA            -88.83nA             -0.10uA
   0.20       18.71uA              7.31uA             32.27uA
   0.40       29.18uA             10.24uA             54.12uA
   0.60       32.49uA             10.66uA             65.78uA
   0.80       33.06uA             10.78uA             69.33uA
   1.00       33.29uA             10.85uA             70.16uA
   1.20       33.44uA             10.91uA             70.54uA
   1.40       33.56uA             10.96uA             70.78uA
   1.60       33.66uA             11.01uA             70.98uA
   1.80       33.76uA             11.06uA             71.15uA
   2.00       33.85uA             11.10uA             71.30uA
   2.20       33.94uA             11.12uA             71.44uA
   2.40       33.99uA             11.13uA             71.59uA
   2.60       34.01uA             11.14uA             71.74uA
   2.80       34.02uA             11.15uA             71.82uA
   3.00       34.03uA             11.16uA             71.84uA
   3.20       34.04uA             11.25uA             71.85uA
   3.40       34.06uA             11.17uA             71.87uA
   3.60       34.08uA             11.09uA             71.89uA
   3.80       34.10uA             11.01uA             71.91uA
   4.00       34.12uA             10.93uA             71.93uA
   4.20       34.14uA             10.85uA             71.95uA
   4.40       34.16uA             10.77uA             71.97uA
   4.60       34.18uA             10.69uA             71.99uA
   4.80       34.20uA             10.61uA             72.01uA
   5.00       34.22uA             10.53uA             72.03uA
|
[POWER_clamp]
| voltage     I(typ)              I(min)              I(max)
|
  -5.00       48.19uA             16.29uA             95.53uA
  -4.90       47.87uA             16.17uA             95.03uA
  -4.80       47.55uA             16.05uA             94.53uA
  -4.70       47.23uA             15.93uA             94.03uA
  -4.60       46.91uA             15.81uA             93.53uA
  -4.50       46.59uA             15.69uA             93.03uA
  -4.40       46.27uA             15.57uA             92.53uA
  -4.30       45.95uA             15.45uA             92.03uA
```

-4.20	45.63uA	15.33uA	91.53uA
-4.10	45.31uA	15.21uA	91.03uA
-4.00	44.99uA	15.09uA	90.53uA
-3.90	44.67uA	14.97uA	90.03uA
-3.80	44.35uA	14.85uA	89.53uA
-3.70	44.03uA	14.73uA	89.03uA
-3.60	43.71uA	14.61uA	88.53uA
-3.50	43.39uA	14.49uA	88.03uA
-3.40	43.07uA	14.37uA	87.53uA
-3.30	42.75uA	14.25uA	87.03uA
-3.20	42.43uA	14.13uA	86.53uA
-3.10	42.11uA	14.01uA	86.03uA
-3.00	41.79uA	13.89uA	85.53uA
-2.90	41.47uA	13.77uA	85.03uA
-2.80	41.15uA	13.65uA	84.53uA
-2.70	40.83uA	13.53uA	84.03uA
-2.60	40.51uA	13.41uA	83.53uA
-2.50	40.19uA	13.29uA	83.03uA
-2.40	39.87uA	13.17uA	82.53uA
-2.30	39.55uA	13.05uA	82.03uA
-2.20	39.23uA	12.93uA	81.53uA
-2.10	38.91uA	12.81uA	81.03uA
-2.00	38.59uA	12.69uA	80.53uA
-1.90	38.27uA	12.57uA	80.03uA
-1.80	37.95uA	12.45uA	79.53uA
-1.70	37.63uA	12.33uA	79.03uA
-1.60	37.31uA	12.22uA	78.53uA
-1.50	36.99uA	12.11uA	78.03uA
-1.40	36.68uA	12.01uA	77.53uA
-1.30	36.38uA	11.92uA	77.03uA
-1.20	36.11uA	11.84uA	76.53uA
-1.10	35.86uA	11.76uA	76.03uA
-1.00	35.63uA	11.69uA	75.53uA
-0.90	35.41uA	11.63uA	75.06uA
-0.80	35.22uA	11.57uA	74.63uA
-0.70	35.05uA	11.52uA	74.24uA
-0.60	34.90uA	11.48uA	73.89uA
-0.50	34.77uA	11.44uA	73.58uA
-0.40	34.65uA	11.41uA	73.30uA
-0.30	34.55uA	11.38uA	73.06uA
-0.20	34.47uA	11.35uA	72.86uA
-0.10	34.40uA	11.33uA	72.68uA
0.00	34.34uA	11.31uA	72.54uA

```
| End [Model] pdddgz
|
|*********************************************************************
|                              Model pdudgz
|*********************************************************************
|
[Model]          pdudgz
Model_type       Input
Polarity         Non-Inverting
Vinl =  0.000V
Vinh =   3.30V
C_comp           5.00pF              5.00pF              5.00pF
|
|
[Temperature Range]       25.00               0.12k               0.000
[Pullup Reference]        3.30V               3.00V               3.60V
[Pulldown Reference]      0.000V              0.000V              0.000V
[POWER Clamp Reference]   5.00V               4.50V               5.50V
[GND Clamp Reference]     0.000V              0.000V              0.000V
[GND_clamp]
| voltage     I(typ)              I(min)              I(max)
|
  -5.00      -64.63A             -59.13A             -66.41A
  -4.80      -61.55A             -56.41A             -63.21A
  -4.60      -58.47A             -53.69A             -60.01A
  -4.40      -55.39A             -50.97A             -56.81A
  -4.20      -52.31A             -48.25A             -53.61A
  -4.00      -49.23A             -45.53A             -50.41A
  -3.80      -46.15A             -42.81A             -47.21A
  -3.60      -43.07A             -40.09A             -44.01A
  -3.40      -39.99A             -37.37A             -40.81A
  -3.20      -36.91A             -34.65A             -37.61A
  -3.00      -33.82A             -31.94A             -34.41A
  -2.80      -30.73A             -29.22A             -31.22A
  -2.60      -27.64A             -26.51A             -28.02A
  -2.40      -24.56A             -23.79A             -24.82A
  -2.20      -21.47A             -21.08A             -21.62A
  -2.00      -18.38A             -18.36A             -18.42A
  -1.80      -15.29A             -15.64A             -15.22A
  -1.60      -12.20A             -12.93A             -12.03A
  -1.40       -9.12A             -10.21A              -8.83A
  -1.20       -6.03A              -7.50A              -5.63A
  -1.00       -2.94A              -4.78A              -2.43A
  -0.80       -0.20A              -2.07A             -64.17mA
```

```
  -0.60       -1.85mA            -96.40mA            -4.85mA
  -0.40      -83.24uA             -0.50mA            -0.23mA
  -0.20      -60.52uA            -36.82uA           -86.29uA
  -0.00      -60.40uA            -35.33uA           -85.95uA
   0.20      -60.32uA            -35.27uA           -85.85uA
   0.40      -60.23uA            -35.20uA           -85.73uA
   0.60      -60.11uA            -35.13uA           -85.57uA
   0.80      -59.96uA            -35.03uA           -85.37uA
   1.00      -59.74uA            -34.87uA           -85.08uA
   1.20      -59.32uA            -34.50uA           -84.56uA
   1.40      -58.35uA            -33.59uA           -83.44uA
   1.60      -56.47uA            -31.92uA           -81.36uA
   1.80      -53.57uA            -29.25uA           -78.20uA
   2.00      -49.55uA             -7.60uA           -73.89uA
   2.20      -43.70uA            -16.78nA           -68.43uA
   2.40       -3.73uA              0.10uA           -61.70uA
   2.60        0.10uA              0.11uA           -51.99uA
   2.80        0.12uA              0.12uA            -2.43uA
   3.00        0.13uA              0.13uA             0.13uA
   3.20        0.14uA              0.20uA             0.14uA
   3.40        0.15uA              0.15uA             0.15uA
   3.60        0.16uA             96.30nA             0.16uA
   3.80        0.17uA             43.50nA             0.17uA
   4.00        0.18uA             -9.30nA             0.18uA
   4.20        0.18uA            -62.10nA             0.19uA
   4.40        0.19uA             -0.11uA             0.20uA
   4.60        0.20uA             -0.17uA             0.21uA
   4.80        0.21uA             -0.22uA             0.22uA
   5.00        0.22uA             -0.27uA             0.23uA
|
[POWER_clamp]
| voltage     I(typ)              I(min)              I(max)
|
  -5.00        0.61uA              0.59uA              0.65uA
  -4.90        0.60uA              0.58uA              0.65uA
  -4.80        0.59uA              0.58uA              0.64uA
  -4.70        0.59uA              0.57uA              0.63uA
  -4.60        0.58uA              0.56uA              0.63uA
  -4.50        0.57uA              0.56uA              0.62uA
  -4.40        0.56uA              0.55uA              0.61uA
  -4.30        0.56uA              0.54uA              0.60uA
  -4.20        0.55uA              0.54uA              0.60uA
  -4.10        0.54uA              0.53uA              0.59uA
  -4.00        0.54uA              0.52uA              0.58uA
```

```
  -3.90        0.53uA              0.52uA              0.58uA
  -3.80        0.52uA              0.51uA              0.57uA
  -3.70        0.52uA              0.50uA              0.56uA
  -3.60        0.51uA              0.50uA              0.56uA
  -3.50        0.50uA              0.49uA              0.55uA
  -3.40        0.50uA              0.48uA              0.54uA
  -3.30        0.49uA              0.48uA              0.53uA
  -3.20        0.48uA              0.47uA              0.53uA
  -3.10        0.48uA              0.46uA              0.52uA
  -3.00        0.47uA              0.46uA              0.51uA
  -2.90        0.46uA              0.45uA              0.51uA
  -2.80        0.46uA              0.44uA              0.50uA
  -2.70        0.45uA              0.44uA              0.49uA
  -2.60        0.44uA              0.43uA              0.49uA
  -2.50        0.44uA              0.42uA              0.48uA
  -2.40        0.43uA              0.41uA              0.47uA
  -2.30        0.42uA              0.41uA              0.46uA
  -2.20        0.42uA              0.40uA              0.46uA
  -2.10        0.41uA              0.39uA              0.45uA
  -2.00        0.40uA              0.39uA              0.44uA
  -1.90        0.39uA              0.38uA              0.44uA
  -1.80        0.39uA              0.37uA              0.43uA
  -1.70        0.38uA              0.37uA              0.42uA
  -1.60        0.37uA              0.36uA              0.42uA
  -1.50        0.37uA              0.35uA              0.41uA
  -1.40        0.36uA              0.35uA              0.40uA
  -1.30        0.35uA              0.34uA              0.39uA
  -1.20        0.35uA              0.33uA              0.39uA
  -1.10        0.34uA              0.33uA              0.38uA
  -1.00        0.33uA              0.32uA              0.37uA
  -0.90        0.33uA              0.31uA              0.37uA
  -0.80        0.32uA              0.31uA              0.36uA
  -0.70        0.31uA              0.30uA              0.35uA
  -0.60        0.31uA              0.29uA              0.35uA
  -0.50        0.30uA              0.29uA              0.34uA
  -0.40        0.29uA              0.28uA              0.33uA
  -0.30        0.29uA              0.27uA              0.32uA
  -0.20        0.28uA              0.27uA              0.32uA
  -0.10        0.27uA              0.26uA              0.31uA
   0.00        0.27uA              0.25uA              0.30uA
|
| End [Model] pdudgz
|
|*****************************************************************************
```

```
|                              Model pdidgz
|*************************************************************************
|
[Model]          pdidgz
Model_type       Input
Polarity         Non-Inverting
Vinl =  0.000V
Vinh =   3.30V
C_comp           5.00pF              5.00pF              5.00pF
|
|
[Temperature Range]       25.00               0.12k               0.000
[Pullup Reference]        3.30V               3.00V               3.60V
[Pulldown Reference]      0.000V              0.000V              0.000V
[POWER Clamp Reference]   5.00V               4.50V               5.50V
[GND Clamp Reference]     0.000V              0.000V              0.000V
[GND_clamp]
| voltage     I(typ)              I(min)              I(max)
|
-5.00      -64.63A             -59.13A             -66.41A
-4.80      -61.55A             -56.41A             -63.21A
-4.60      -58.47A             -53.69A             -60.01A
-4.40      -55.39A             -50.97A             -56.81A
-4.20      -52.31A             -48.25A             -53.61A
  -4.00      -49.23A             -45.53A             -50.41A
  -3.80      -46.15A             -42.81A             -47.21A
  -3.60      -43.07A             -40.09A             -44.01A
  -3.40      -39.99A             -37.37A             -40.81A
  -3.20      -36.91A             -34.65A             -37.61A
  -3.00      -33.82A             -31.94A             -34.41A
  -2.80      -30.73A             -29.22A             -31.22A
  -2.60      -27.64A             -26.51A             -28.02A
  -2.40      -24.56A             -23.79A             -24.82A
  -2.20      -21.47A             -21.08A             -21.62A
  -2.00      -18.38A             -18.36A             -18.42A
  -1.80      -15.29A             -15.64A             -15.22A
  -1.60      -12.20A             -12.93A             -12.03A
  -1.40       -9.12A             -10.21A              -8.83A
  -1.20       -6.03A              -7.50A              -5.63A
  -1.00       -2.94A              -4.78A              -2.43A
  -0.80       -0.20A              -2.07A             -64.14mA
  -0.60       -1.79mA            -96.39mA             -4.77mA
  -0.40      -22.83uA             -0.47mA             -0.14mA
  -0.20       -0.15uA             -1.56uA             -0.37uA
```

```
  -0.00      -88.71nA            -89.34nA             -0.11uA
   0.20      -72.38nA            -68.50nA            -88.30nA
   0.40      -56.11nA            -52.12nA            -71.55nA
   0.60      -39.84nA            -35.76nA            -54.82nA
   0.80      -23.57nA            -19.40nA            -38.12nA
   1.00       -7.31nA             -3.04nA            -21.42nA
   1.20        8.94nA             13.32nA             -4.73nA
   1.40       25.19nA             29.68nA             11.97nA
   1.60       41.42nA             46.03nA             28.68nA
   1.80       57.64nA             62.39nA             45.42nA
   2.00       73.83nA             78.74nA             62.20nA
   2.20       89.95nA             94.86nA             79.06nA
   2.40        0.11uA              0.11uA            96.02nA
   2.60        0.12uA              0.12uA              0.11uA
   2.80        0.13uA              0.13uA              0.13uA
   3.00        0.14uA              0.14uA              0.14uA
   3.20        0.15uA              0.21uA              0.15uA
   3.40        0.15uA              0.15uA              0.16uA
   3.60        0.16uA              0.10uA              0.17uA
   3.80        0.17uA             47.20nA              0.18uA
   4.00        0.18uA             -5.80nA              0.18uA
   4.20        0.19uA            -58.80nA              0.19uA
   4.40        0.20uA             -0.11uA              0.20uA
   4.60        0.20uA             -0.16uA              0.21uA
   4.80        0.21uA             -0.22uA              0.22uA
   5.00        0.22uA             -0.27uA              0.23uA
|
[POWER_clamp]
| voltage     I(typ)              I(min)              I(max)
|
  -5.00        0.60uA              0.59uA              0.65uA
  -4.90        0.60uA              0.58uA              0.64uA
  -4.80        0.59uA              0.58uA              0.64uA
  -4.70        0.58uA              0.57uA              0.63uA
  -4.60        0.58uA              0.56uA              0.62uA
  -4.50        0.57uA              0.56uA              0.62uA
  -4.40        0.56uA              0.55uA              0.61uA
  -4.30        0.56uA              0.54uA              0.60uA
  -4.20        0.55uA              0.54uA              0.59uA
  -4.10        0.54uA              0.53uA              0.59uA
  -4.00        0.54uA              0.52uA              0.58uA
  -3.90        0.53uA              0.52uA              0.57uA
  -3.80        0.52uA              0.51uA              0.57uA
  -3.70        0.52uA              0.50uA              0.56uA
```

```
  -3.60        0.51uA              0.50uA              0.55uA
  -3.50        0.50uA              0.49uA              0.55uA
  -3.40        0.49uA              0.48uA              0.54uA
  -3.30        0.49uA              0.48uA              0.53uA
  -3.20        0.48uA              0.47uA              0.53uA
  -3.10        0.47uA              0.46uA              0.52uA
  -3.00        0.47uA              0.46uA              0.51uA
  -2.90        0.46uA              0.45uA              0.51uA
  -2.80        0.45uA              0.44uA              0.50uA
  -2.70        0.45uA              0.43uA              0.49uA
  -2.60        0.44uA              0.43uA              0.48uA
  -2.50        0.43uA              0.42uA              0.48uA
  -2.40        0.43uA              0.41uA              0.47uA
  -2.30        0.42uA              0.41uA              0.46uA
  -2.20        0.41uA              0.40uA              0.46uA
  -2.10        0.41uA              0.39uA              0.45uA
  -2.00        0.40uA              0.39uA              0.44uA
  -1.90        0.39uA              0.38uA              0.44uA
  -1.80        0.39uA              0.37uA              0.43uA
  -1.70        0.38uA              0.37uA              0.42uA
  -1.60        0.37uA              0.36uA              0.42uA
  -1.50        0.37uA              0.35uA              0.41uA
  -1.40        0.36uA              0.35uA              0.40uA
  -1.30        0.35uA              0.34uA              0.39uA
-1.20        0.35uA              0.33uA              0.39uA
-1.10        0.34uA              0.33uA              0.38uA
  -1.00        0.33uA              0.32uA              0.37uA
  -0.90        0.33uA              0.31uA              0.37uA
  -0.80        0.32uA              0.31uA              0.36uA
  -0.70        0.31uA              0.30uA              0.35uA
  -0.60        0.31uA              0.29uA              0.35uA
  -0.50        0.30uA              0.29uA              0.34uA
  -0.40        0.29uA              0.28uA              0.33uA
  -0.30        0.29uA              0.27uA              0.33uA
  -0.20        0.28uA              0.27uA              0.32uA
  -0.10        0.28uA              0.26uA              0.31uA
   0.00        0.27uA              0.26uA              0.31uA
|

| End [Model] pdidgz
```

Revision History

Revision	Date	Description
0.0	27 April 2004	Initial release

NOTES

How to Reach Us:

Home Page:
www.freescale.com

USA/Europe or Locations Not Listed:
Freescale Semiconductor
Technical Information Center, CH370
1300 N. Alma School Road
Chandler, Arizona 85224
1-800-521-6274 or 480-768-2130

Europe, Middle East, and Africa:
Freescale Halbleiter Deutschland GmbH
Technical Information Center
Schatzbogen 7
81829 Muenchen, Germany
+44 1296 380 456 (English)
+46 8 52200080 (English)
+49 89 92103 559 (German)
+33 1 69 35 48 48 (French)

Japan:
Freescale Semiconductor Japan Ltd.
Headquarters
ARCO Tower 15F
1-8-1, Shimo-Meguro, Meguro-ku
Tokyo 153-0063
Japan
0120 191014 or +81 3 5437 9125
support-japan@freescale.com

Asia/Pacific:
Freescale Semiconductor Hong Kong Ltd.
Technical Information Center
2 Dai King Street
Tai Po Industrial Estate
Tai Po, N.T., Hong Kong
852-26668334

For Literature Requests Only:
Freescale Semiconductor Literature Distribution Center
P.O. Box 5405
Denver, Colorado 80217
1-800-441-2447 or 303-675-2140
Fax: 303-675-2150

Information in this document is provided solely to enable system and software implementers to use Freescale Semiconductor products. There are no express or implied copyright licenses granted hereunder to design or fabricate any integrated circuits or integrated circuits based on the information in this document.

Freescale Semiconductor reserves the right to make changes without further notice to any products herein. Freescale Semiconductor makes no warranty, representation or guarantee regarding the suitability of its products for any particular purpose, nor does Freescale Semiconductor assume any liability arising out of the application or use of any product or circuit, and specifically disclaims any and all liability, including without limitation consequential or incidental damages. “Typical” parameters that may be provided in Freescale Semiconductor data sheets and/or specifications can and do vary in different applications and actual performance may vary over time. All operating parameters, including “Typicals”, must be validated for each customer application by customer’s technical experts. Freescale Semiconductor does not convey any license under its patent rights nor the rights of others. Freescale Semiconductor products are not designed, intended, or authorized for use as components in systems intended for surgical implant into the body, or other applications intended to support or sustain life, or for any other application in which the failure of the Freescale Semiconductor product could create a situation where personal injury or death may occur. Should Buyer purchase or use Freescale Semiconductor products for any such unintended or unauthorized application, Buyer shall indemnify and hold Freescale Semiconductor and its officers, employees, subsidiaries, affiliates, and distributors harmless against all claims, costs, damages, and expenses, and reasonable attorney fees arising out of, directly or indirectly, any claim of personal injury or death associated with such unintended or unauthorized use, even if such claim alleges that Freescale Semiconductor was negligent regarding the design or manufacture of the part.

Launched by Motorola
freescale™
semiconductor

Freescale™ and the Freescale logo are trademarks of Freescale Semiconductor, Inc. All other product or service names are the property of their respective owners.

© Freescale Semiconductor, Inc. 2004. All rights reserved.

DSP56374
Rev. 1
11/2004