STB76NF75, STI76NF75 STP76NF75

N-channel 75 V, 0.0095 Ω, 80 A TO-220, D²PAK, I²PAK STripFET™ II Power MOSFET

Features

Type	V_{DSS}	$R_{DS(on)}$ max	I_D
STB76NF75	75 V	< 0.011 Ω	80 A(1)
STI76NF75	75 V	< 0.011 Ω	80 A(1)
STP76NF75	75 V	< 0.011 Ω	80 A(1)

1. Current limited by package

- Exceptional dv/dt capability
- 100% avalanche tested

Application

- Switching applications
  - Automotive

Description

This Power MOSFET is the latest development of STMicroelectronics unique "single feature size" strip-based process. The resulting transistor shows extremely high packing density for low on-resistance, rugged avalanche characteristics and less critical alignment steps therefore a remarkable manufacturing reproducibility.

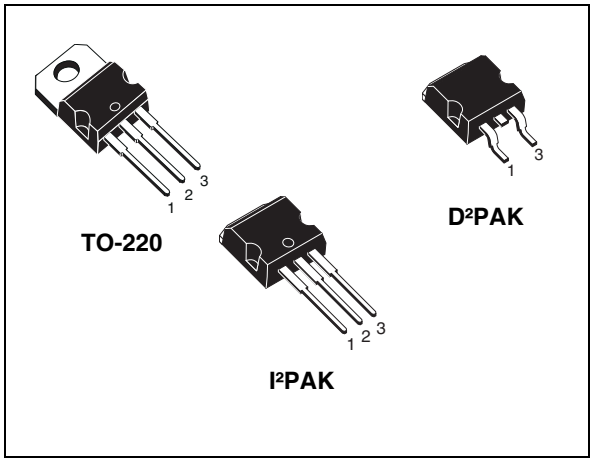

Figure 1. Internal schematic diagram

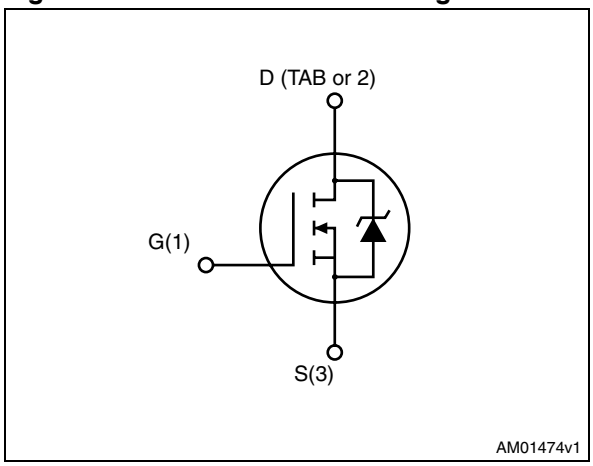

Table 1. Device summary

Order codes	Marking	Package	Packaging
STB76NF75	B76NF75	D²PAK	Tape and reel
STI76NF75	I76NF75	I²PAK	Tube
STP76NF75	P76NF75	TO-220	Tube

Contents

1 Electrical ratings 3

2 Electrical characteristics 4

2.1 Electrical characteristics (curves) 6

3 Test circuits 8

4 Package mechanical data 9

5 Packaging mechanical data 13

6 Revision history 14

1 Electrical ratings

Table 2. Absolute maximum ratings

Symbol	Parameter	Value	Unit
V_{DS}	Drain-source voltage (V_{GS} = 0)	75	V
V_{DGR}	Drain-gate voltage (R_{GS} = 20 kΩ)	75	V
V_{GS}	Gate-source voltage	± 20	V
I_D (1)	Drain current (continuous) at T_C = 25 °C	80	A
I_D(1)	Drain current (continuous) at T_C=100 °C	70	A
I_{DM}(2)	Drain current (pulsed)	320	A
P_{TOT}	Total dissipation at T_C = 25 °C	300	W
	Derating factor	2.0	W/°C
dv/dt (3)	Peak diode recovery voltage slope	12	V/ns
E_{AS} (4)	Single pulse avalanche energy	700	mJ
T_J T_{stg}	Operating junction temperature Storage temperature	-55 to 175	°C

1. Current limited by package
2. Pulse width limited by safe operating area
3. $I_{SD} \leq$ 80 A, di/dt $\leq$ 300 A/µs, $V_{DD} \leq V_{(BR)DSS}$, $T_j \leq T_{JMAX}$
4. Starting T_J = 25 °C, I_D = 40 A, V_{DD} = 37.5 V

Table 3. Thermal data

Symbol	Parameter	Value	Unit
R_{thJC}	Thermal resistance junction-case max	0.5	°C/W
R_{thJA}	Thermal resistance junction-ambient max	62.5	°C/W
T_l	Maximum lead temperature for soldering purpose (1)	300	°C

1. 1.6mm from case for 10 sec

2 Electrical characteristics

(T_{CASE}=25 °C unless otherwise specified)

Table 4. On/off states

Symbol	Parameter	Test conditions	Min.	Typ.	Max.	Unit
$V_{(BR)DSS}$	Drain-source breakdown voltage	I_D = 250 µA, V_{GS}= 0	75			V
I_{DSS}	Zero gate voltage drain current (V_{GS} = 0)	V_{DS} = Max rating, V_{DS} = Max rating @125 °C			1 10	µA µA
I_{GSS}	Gate body leakage current (V_{DS} = 0)	V_{GS} = ± 20 V			±100	nA
$V_{GS(th)}$	Gate threshold voltage	V_{DS}= V_{GS} , I_D = 250 µA	2	3	4	V
$R_{DS(on)}$	Static drain-source on resistance	V_{GS}= 10 V, I_D= 40 A		0.0095	0.011	W

Table 5. Dynamic

Symbol	Parameter	Test conditions	Min.	Typ.	Max.	Unit
g_{fs} (1)	Forward transconductance	V_{DS} = 15 V, I_D = 40 A	-	20		S
C_{iss} C_{oss} C_{rss}	Input capacitance Output capacitance Reverse transfer capacitance	V_{DS} =25 V, f = 1 MHz, V_{GS} = 0	-	3700 730 240		pF pF pF
Q_g Q_{gs} Q_{gd}	Total gate charge Gate-source charge Gate-drain charge	V_{DD} = 60 V, I_D = 80 A V_{GS} =10 V	-	117 27 47	160	nC nC nC

1. Pulsed: pulse duration = 300 µs, duty cycle 1.5%

Table 6. Switching times

Symbol	Parameter	Test conditions	Min.	Typ.	Max.	Unit
$t_{d(on)}$ t_r $t_{d(off)}$ t_f	Turn-on delay time Rise time Turn-off delay time Fall time	V_{DD}= 37.5 V, I_D= 45 A, R_G=4.7 Ω, V_{GS}=10 V *Figure 14 on page 8*	-	25 100 66 30	-	ns ns ns ns

Table 7. Source drain diode

Symbol	Parameter	Test conditions	Min	Typ.	Max	Unit
I_{SD}	Source-drain current		-		80	A
I_{SDM}(1)	Source-drain current (pulsed)		-		320	A
V_{SD}(2)	Forward on voltage	I_{SD} = 80 A, V_{GS} = 0	-		1.5	V
t_{rr} Q_{rr} I_{RRM}	Reverse recovery time Reverse recovery charge Reverse recovery current	I_{SD} = 80 A, di/dt = 100 A/µs, V_{DD} = 25 V, T_J = 150 °C *Figure 16 on page 8*	-	132 660 10		ns nC A

1. Pulse width limited by safe operating area
2. Pulsed: pulse duration=300µs, duty cycle 1.5%

2.1 Electrical characteristics (curves)

Figure 2. Safe operating area

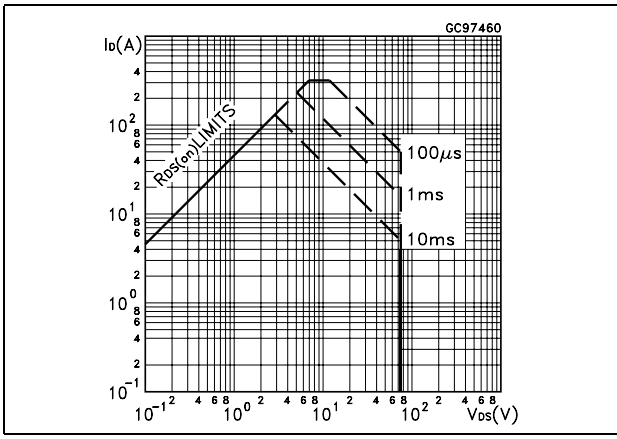

Figure 3. Thermal impedance

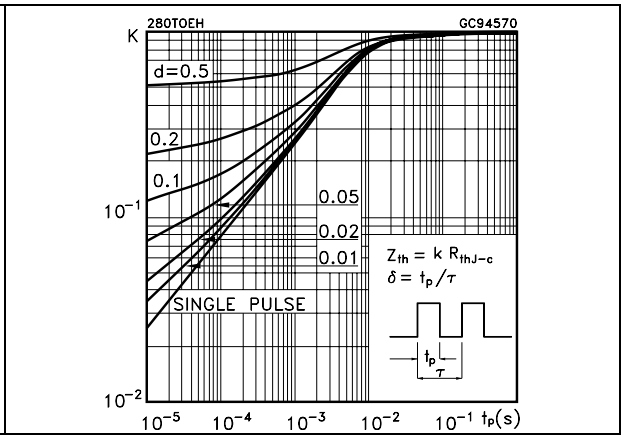

Figure 4. Output characteristics

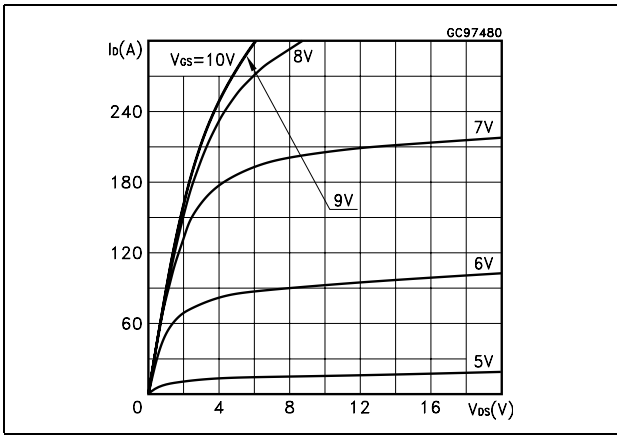

Figure 5. Transfer characteristics

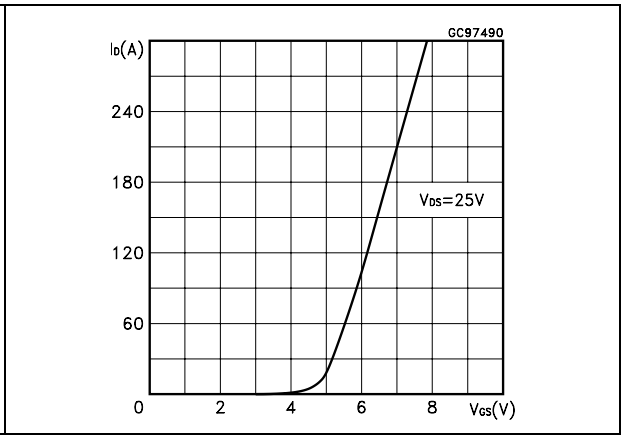

Figure 6. Transconductance

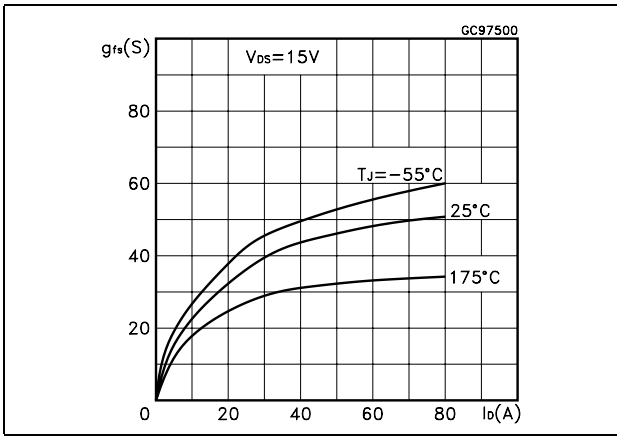

Figure 7. Static drain-source on resistance

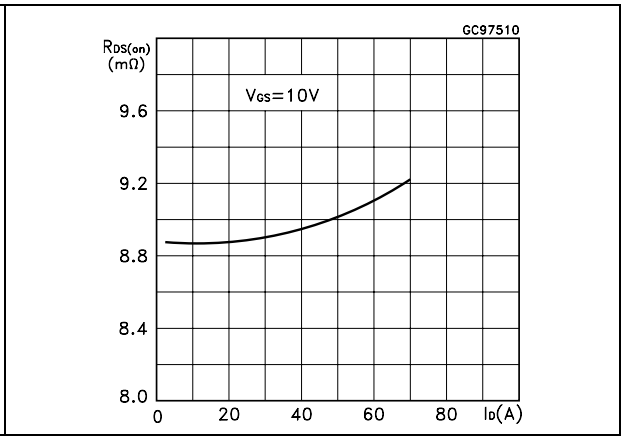

Figure 8. Gate charge vs gate-source voltage

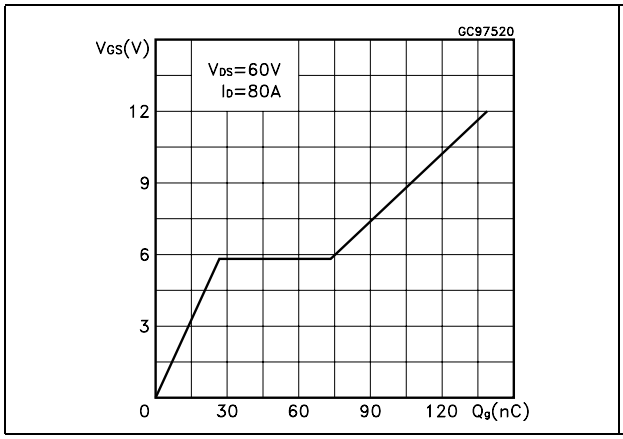

Figure 9. Capacitance variations

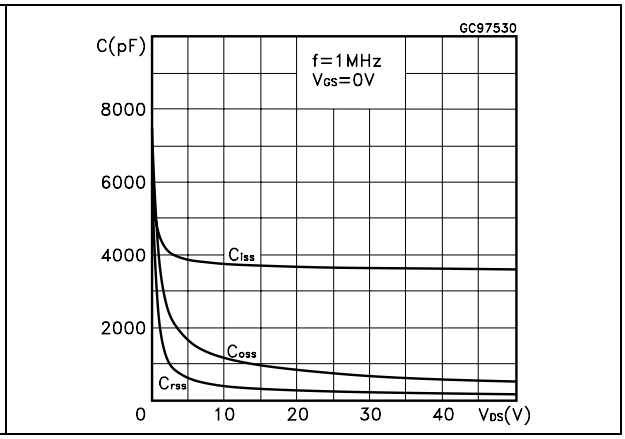

Figure 10. Normalized gate threshold voltage vs temperature

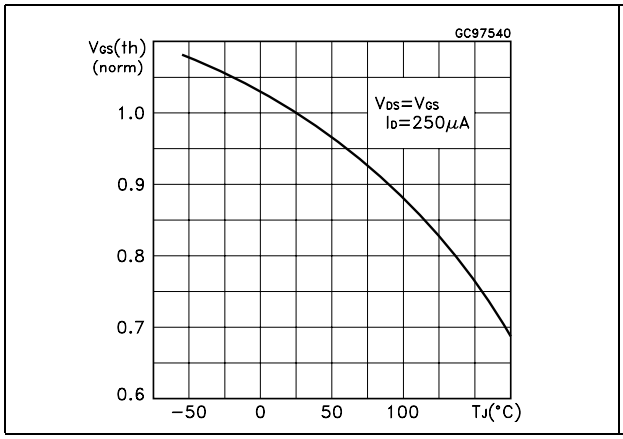

Figure 11. Normalized on resistance vs temperature

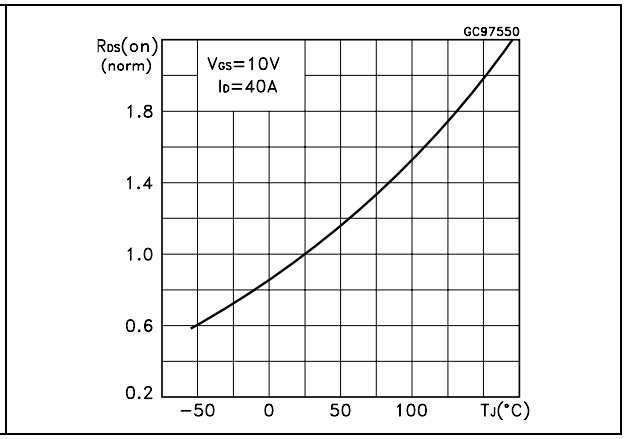

Figure 12. Source-drain diode forward characteristics

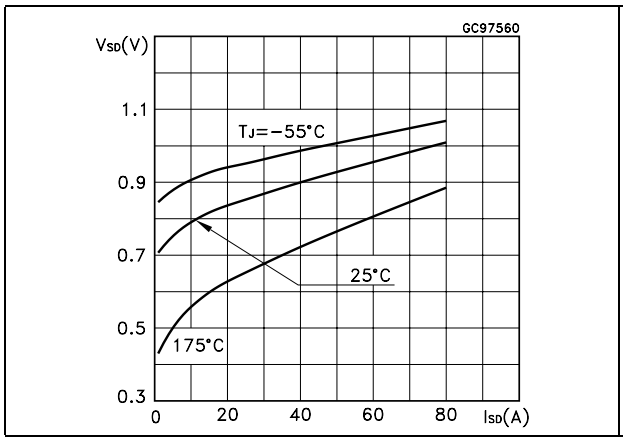

Figure 13. Normalized B_{VDSS} vs temperature

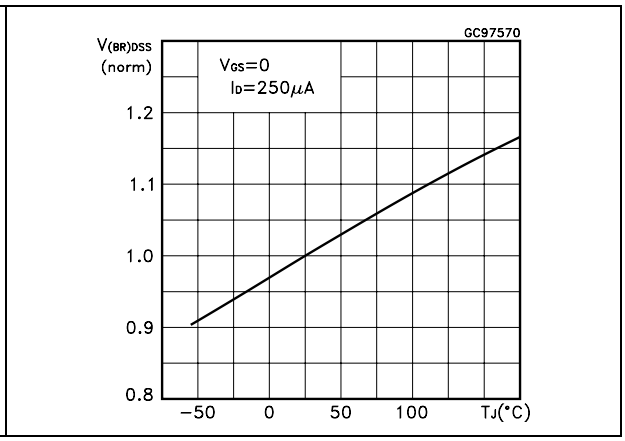

3 Test circuits

Figure 14. Switching times test circuit for resistive load

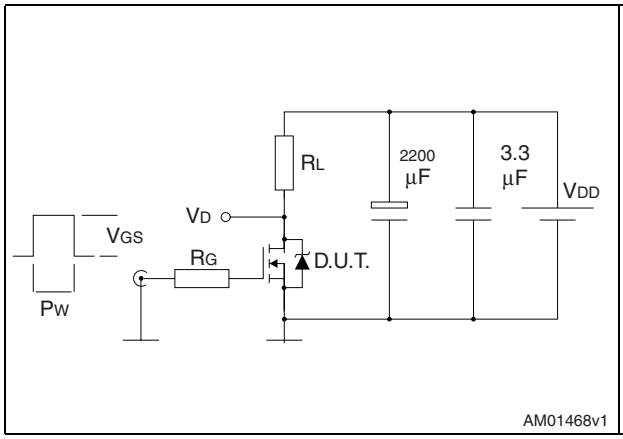

Figure 15. Gate charge test circuit

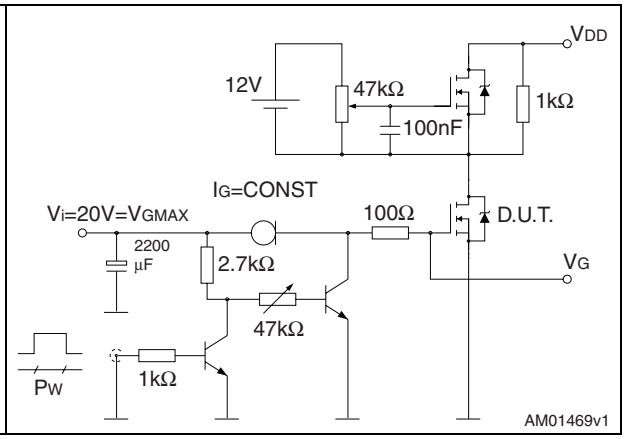

Figure 16. Test circuit for inductive load switching and diode recovery times

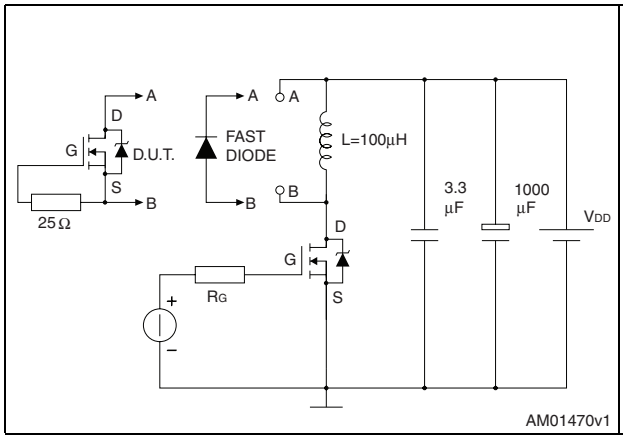

Figure 17. Unclamped inductive load test circuit

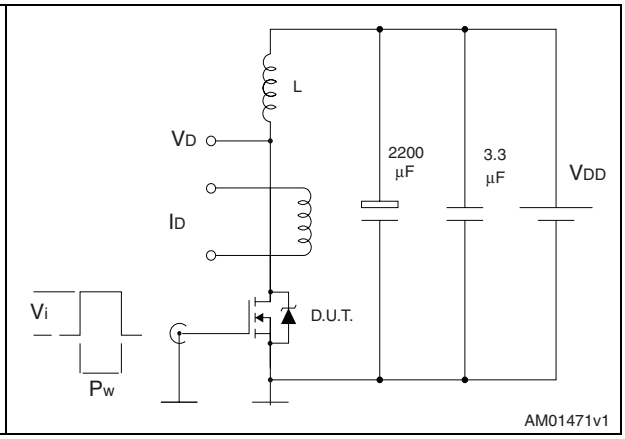

Figure 18. Unclamped inductive waveform

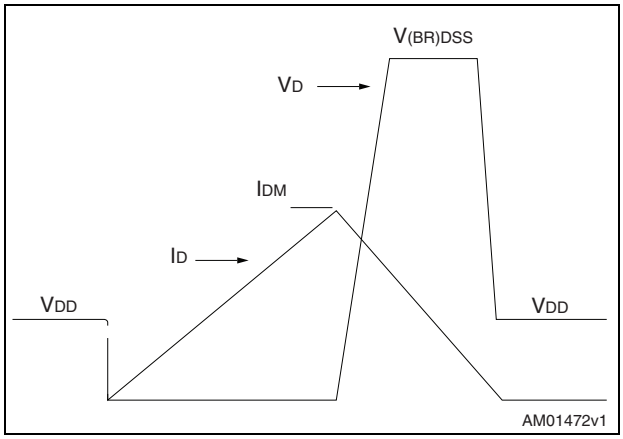

4 Package mechanical data

In order to meet environmental requirements, ST offers these devices in different grades of ECOPACK® packages, depending on their level of environmental compliance. ECOPACK® specifications, grade definitions and product status are available at: www.st.com. ECOPACK is an ST trademark.

D^2PAK (TO-263) mechanical data

Dim	mm			inch		
	Min	Typ	Max	Min	Typ	Max
A	4.40		4.60	0.173		0.181
A1	0.03		0.23	0.001		0.009
b	0.70		0.93	0.027		0.037
b2	1.14		1.70	0.045		0.067
c	0.45		0.60	0.017		0.024
c2	1.23		1.36	0.048		0.053
D	8.95		9.35	0.352		0.368
D1	7.50			0.295		
E	10		10.40	0.394		0.409
E1	8.50			0.334		
e		2.54			0.1	
e1	4.88		5.28	0.192		0.208
H	15		15.85	0.590		0.624
J1	2.49		2.69	0.099		0.106
L	2.29		2.79	0.090		0.110
L1	1.27		1.40	0.05		0.055
L2	1.30		1.75	0.051		0.069
R		0.4			0.016	
V2	0°		8°	0°		8°

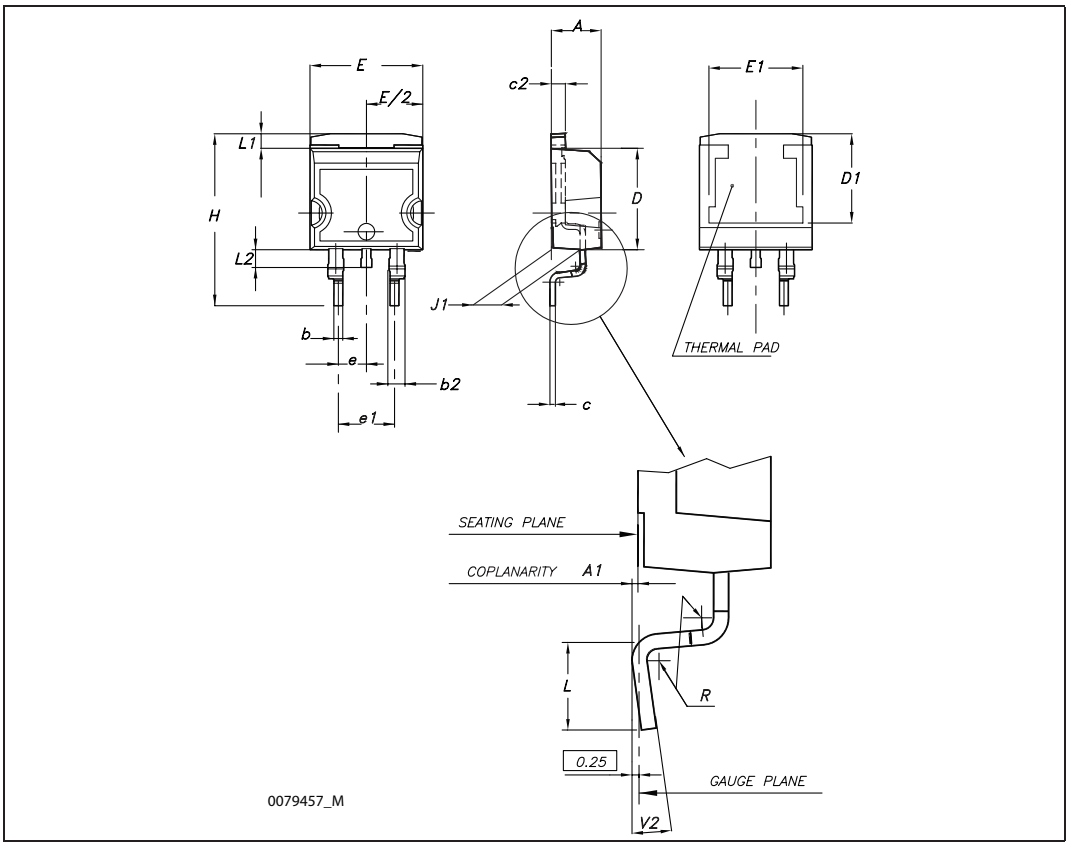

I²PAK (TO-262) mechanical data

Dim	mm			inch		
	Min	Typ	Max	Min	Typ	Max
A	4.40		4.60	0.173		0.181
A1	2.40		2.72	0.094		0.107
b	0.61		0.88	0.024		0.034
b1	1.14		1.70	0.044		0.066
c	0.49		0.70	0.019		0.027
c2	1.23		1.32	0.048		0.052
D	8.95		9.35	0.352		0.368
e	2.40		2.70	0.094		0.106
e1	4.95		5.15	0.194		0.202
E	10		10.40	0.393		0.410
L	13		14	0.511		0.551
L1	3.50		3.93	0.137		0.154
L2	1.27		1.40	0.050		0.055

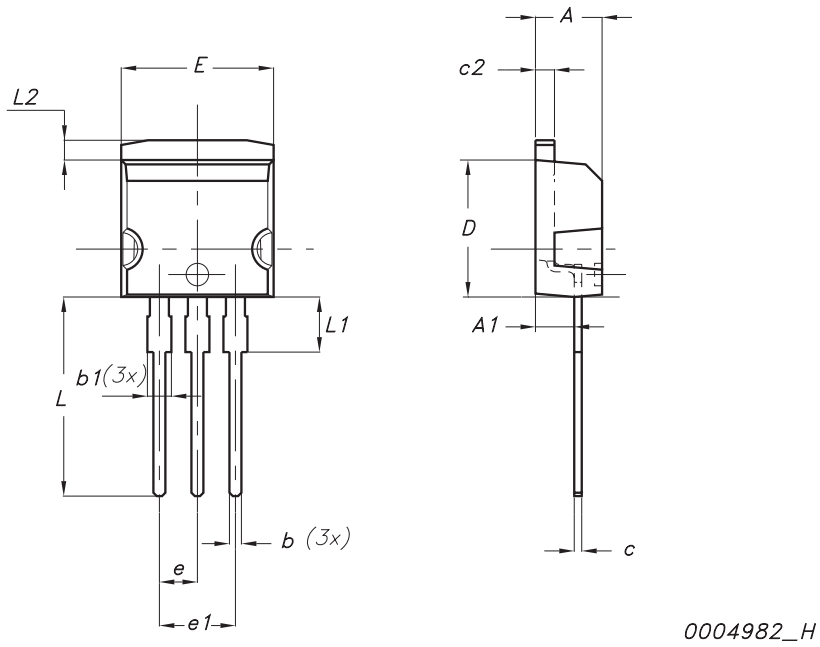

TO-220 type A mechanical data

Dim	mm		
	Min	Typ	Max
A	4.40		4.60
b	0.61		0.88
b1	1.14		1.70
c	0.48		0.70
D	15.25		15.75
D1		1.27	
E	10		10.40
e	2.40		2.70
e1	4.95		5.15
F	1.23		1.32
H1	6.20		6.60
J1	2.40		2.72
L	13		14
L1	3.50		3.93
L20		16.40	
L30		28.90	
∅P	3.75		3.85
Q	2.65		2.95

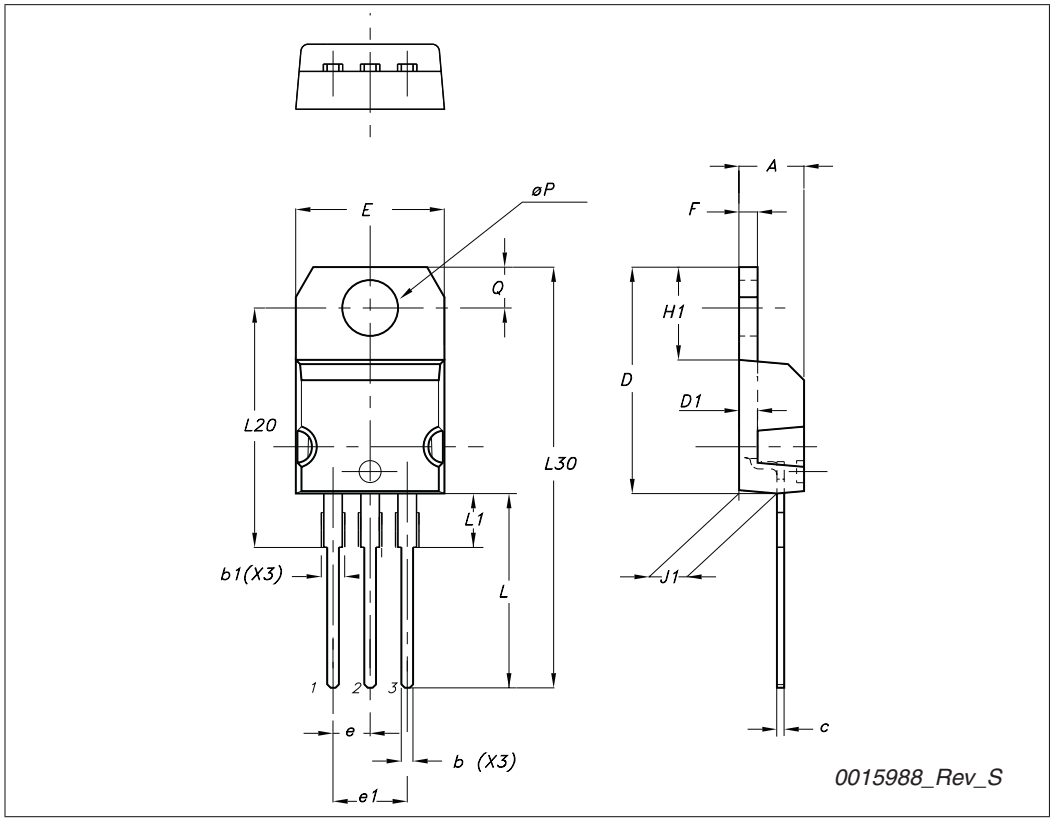

5 Packaging mechanical data

D²PAK FOOTPRINT

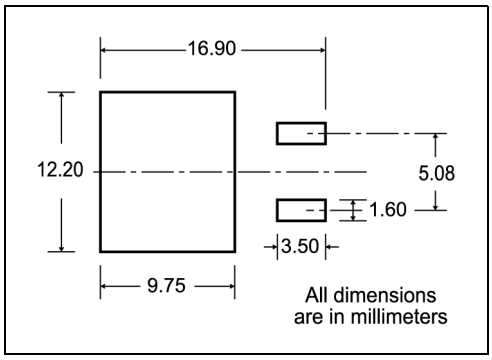

TAPE AND REEL SHIPMENT

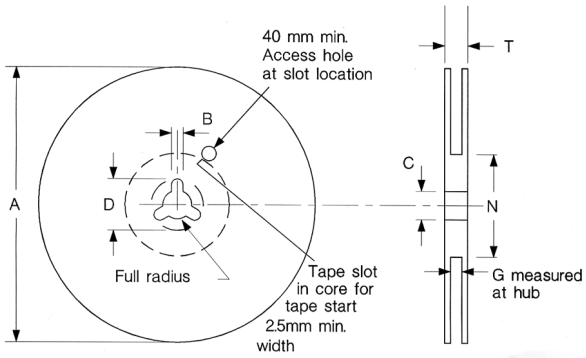

REEL MECHANICAL DATA

DIM.	mm		inch	
	MIN.	MAX.	MIN.	MAX.
A		330		12.992
B	1.5		0.059	
C	12.8	13.2	0.504	0.520
D	20.2		0795	
G	24.4	26.4	0.960	1.039
N	100		3.937	
T		30.4		1.197

BASE QTY	BULK QTY
1000	1000

TAPE MECHANICAL DATA

DIM.	mm		inch	
	MIN.	MAX.	MIN.	MAX.
A0	10.5	10.7	0.413	0.421
B0	15.7	15.9	0.618	0.626
D	1.5	1.6	0.059	0.063
D1	1.59	1.61	0.062	0.063
E	1.65	1.85	0.065	0.073
F	11.4	11.6	0.449	0.456
K0	4.8	5.0	0.189	0.197
P0	3.9	4.1	0.153	0.161
P1	11.9	12.1	0.468	0.476
P2	1.9	2.1	0.075	0.082
R	50		1.574	
T	0.25	0.35	0.0098	0.0137
W	23.7	24.3	0.933	0.956

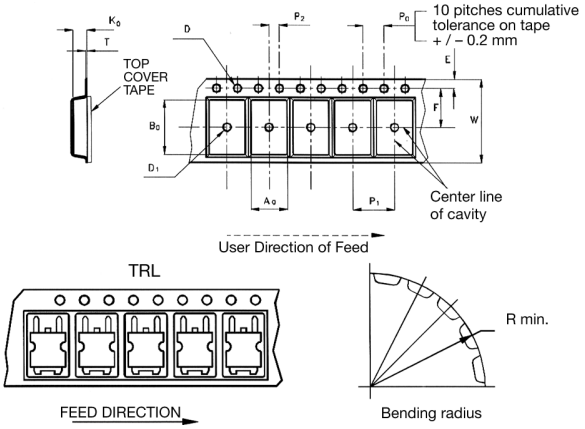

* on sales type

6 Revision history

Table 8. Document revision history

Date	Revision	Changes
25-Jul-2007	1	Initial release
14-Dec-2009	2	Added new package, mechanical data: I²PAK

Please Read Carefully:

Information in this document is provided solely in connection with ST products. STMicroelectronics NV and its subsidiaries (“ST”) reserve the right to make changes, corrections, modifications or improvements, to this document, and the products and services described herein at any time, without notice.

All ST products are sold pursuant to ST’s terms and conditions of sale.

Purchasers are solely responsible for the choice, selection and use of the ST products and services described herein, and ST assumes no liability whatsoever relating to the choice, selection or use of the ST products and services described herein.

No license, express or implied, by estoppel or otherwise, to any intellectual property rights is granted under this document. If any part of this document refers to any third party products or services it shall not be deemed a license grant by ST for the use of such third party products or services, or any intellectual property contained therein or considered as a warranty covering the use in any manner whatsoever of such third party products or services or any intellectual property contained therein.

UNLESS OTHERWISE SET FORTH IN ST’S TERMS AND CONDITIONS OF SALE ST DISCLAIMS ANY EXPRESS OR IMPLIED WARRANTY WITH RESPECT TO THE USE AND/OR SALE OF ST PRODUCTS INCLUDING WITHOUT LIMITATION IMPLIED WARRANTIES OF MERCHANTABILITY, FITNESS FOR A PARTICULAR PURPOSE (AND THEIR EQUIVALENTS UNDER THE LAWS OF ANY JURISDICTION), OR INFRINGEMENT OF ANY PATENT, COPYRIGHT OR OTHER INTELLECTUAL PROPERTY RIGHT.

UNLESS EXPRESSLY APPROVED IN WRITING BY AN AUTHORIZED ST REPRESENTATIVE, ST PRODUCTS ARE NOT RECOMMENDED, AUTHORIZED OR WARRANTED FOR USE IN MILITARY, AIR CRAFT, SPACE, LIFE SAVING, OR LIFE SUSTAINING APPLICATIONS, NOR IN PRODUCTS OR SYSTEMS WHERE FAILURE OR MALFUNCTION MAY RESULT IN PERSONAL INJURY, DEATH, OR SEVERE PROPERTY OR ENVIRONMENTAL DAMAGE. ST PRODUCTS WHICH ARE NOT SPECIFIED AS "AUTOMOTIVE GRADE" MAY ONLY BE USED IN AUTOMOTIVE APPLICATIONS AT USER’S OWN RISK.

Resale of ST products with provisions different from the statements and/or technical features set forth in this document shall immediately void any warranty granted by ST for the ST product or service described herein and shall not create or extend in any manner whatsoever, any liability of ST.

ST and the ST logo are trademarks or registered trademarks of ST in various countries.

Information in this document supersedes and replaces all information previously supplied.

The ST logo is a registered trademark of STMicroelectronics. All other names are the property of their respective owners.

© 2009 STMicroelectronics - All rights reserved

STMicroelectronics group of companies

Australia - Belgium - Brazil - Canada - China - Czech Republic - Finland - France - Germany - Hong Kong - India - Israel - Italy - Japan - Malaysia - Malta - Morocco - Philippines - Singapore - Spain - Sweden - Switzerland - United Kingdom - United States of America

www.st.com