REFLECTOR COATING TYPE HIGH-PERFORMANCE LEDS

GH-2023 Series

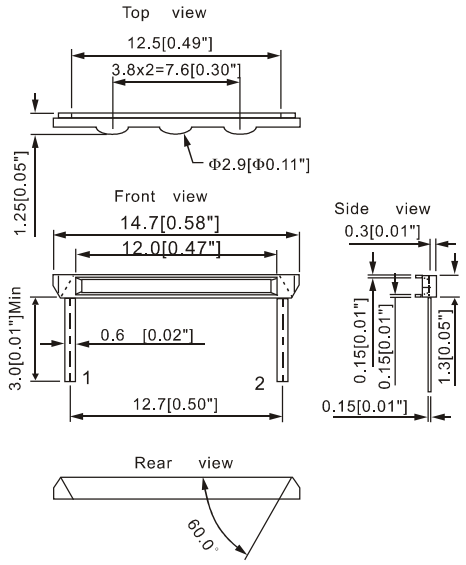

NOTES:1.All dimensions are in millimeters(inches);
2.Tolerances are ±0.2mm(.008inch) unless otherwise noted;
3.Resin color: water clear.

■ Absolute Maximun Ratings

	UNIT	SPEC.
IF	mA	30
IFP	mA	120
VR	V	5
Topr	℃	-20～+80
Tstg	℃	-20～+100

Part No.	MateriaL	Emitted Color	V_f (V)		λ (nm)		Iv (mcd)	Viewing Angle 2 1/2θ
			Typ.	Max.	λ_d	λ_p	Typ.	
RSDA23TZ-WPG	AlGaInP	Red	3.80	4.30	631	640	200	110°
OLDA23TZ-WPG	AlGaInP	Orange	3.80	4.30	624	635	270	
ALDA23TZ-WPG	AlGaInP	Amber	3.80	4.30	595	600	300	
YVDA23TZ-WPE	AlGaInP	Yellow	4.00	4.50	593	595	230	
GBDA23TZ-WPG	AlGaInP	Green	4.20	4.70	578	575	150	
GEIA23TZ-WPG	InGaN	Green	6.40	6.90	527	525	480	
BJJA23TZ-WPH	GaInN	Blue	6.80	7.30	465	460	145	
BVEA23TZ-WPC	GaN/SiC	Blue	6.80	8.50	465	430	30	

REFLECTOR COATING TYPE HIGH-PERFORMANCE LEDS

GH-2024 Series

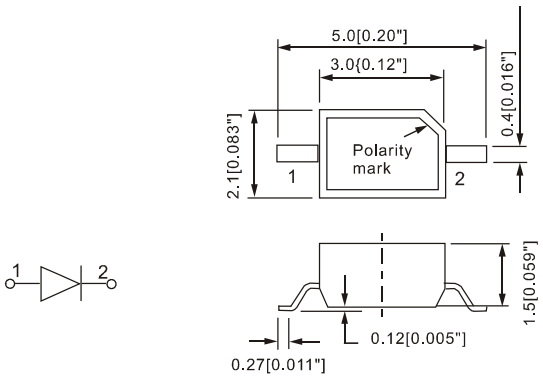

For Reflow Soldering

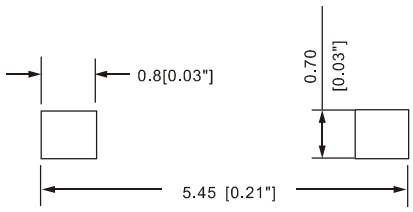

NOTES:1.All dimensions are in millimeters(inches);
2.Tolerances are ±0.2mm(.008inch) unless otherwise noted;
3.Resin color: water clear.

■ Absolute Maximun Ratings

	UNIT	SPEC.
IF	mA	30
IFp	mA	120
VR	V	5
Topr	℃	-20～+80
Tstg	℃	-20～+100

Part No.	Material	Emitted Color	V_f (V)		λ (nm)		Iv (mcd)	Viewing Angle 2 1/2θ
			Typ.	Max.	λ_d	λ_P	Typ.	
RSDB24TZ-WPG	AlGaInP	Red	1.90	2.40	631	640	60	120˚
OLDB24TZ-WPG	AlGaInP	Orange	1.90	2.40	624	635	77	
ALDB24TZ-WPG	AlGaInP	Amber	1.90	2.40	595	600	86	
YVDB24TZ-WPE	AlGaInP	Yellow	2.00	2.50	593	595	66	
GBDB24TZ-WPG	AlGaInP	Green	2.10	2.60	578	575	43	
GEIB24TZ-WPG	InGaN	Green	3.20	3.80	527	525	138	
BJJB24TZ-WPH	GaInN	Blue	3.40	4.00	465	460	41	
BVEB24TZ-WPC	GaN/SiC	Blue	4.00	4.50	465	430	9	

REFLECTOR COATING TYPE HIGH-PERFORMANCE LEDS

GH-2028 FULL COLOR Series

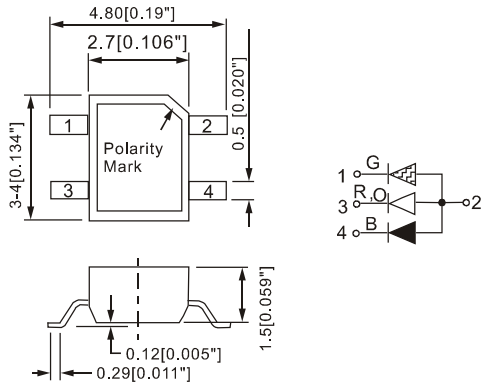

For Reflow Soldering

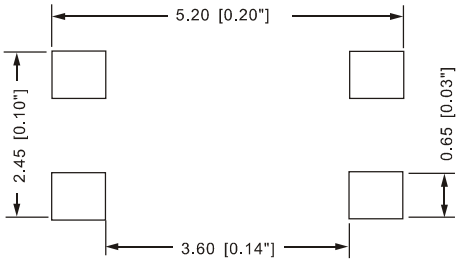

NOTES:1.All dimensions are in millimeters(inches);
2.Tolerances are ±0.2mm(.008inch) unless otherwise noted;
3.Resin color: water clear.

■ Absolute Maximun Ratings

	UNIT	SPEC.
IF	mA	30
IFp	mA	120
VR	V	5
Topr	℃	-20～+80
Tstg	℃	-20～+100

Part No.	Material	Emitted Color	V_f (V)		λ (nm)		Iv (mcd)	Viewing Angle 2 1/2θ
			Typ.	Max.	λ_d	λ_P	Typ.	
WDB328TZ-WBE	GaAlAs	Red	1.80	2.30	643	656	23	120°
	GaP	Green	2.15	2.60	572	566	20	
	GaN/SiC	Blue	4.00	4.50	465	430	9.0	
WDAG28TZ-WBG	AlGaInP	Red	1.90	2.40	631	643	60	
	InGaN	Green	3.20	3.60	527	525	138	
	GaInN	Blue	3.30	3.80	468	465	44	
WDAH28TZ-WBZ	AlGaInP	Orange	1.95	2.50	615	620	86	
	InGaP	Green	3.30	4.00	509	505	138	
	GaInP	Blue	3.30	3.80	468	465	44	

REFLECTOR COATING TYPE HIGH-PERFORMANCE LEDS

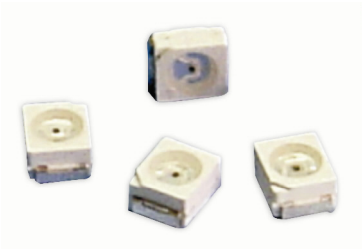

GH-2030 Series

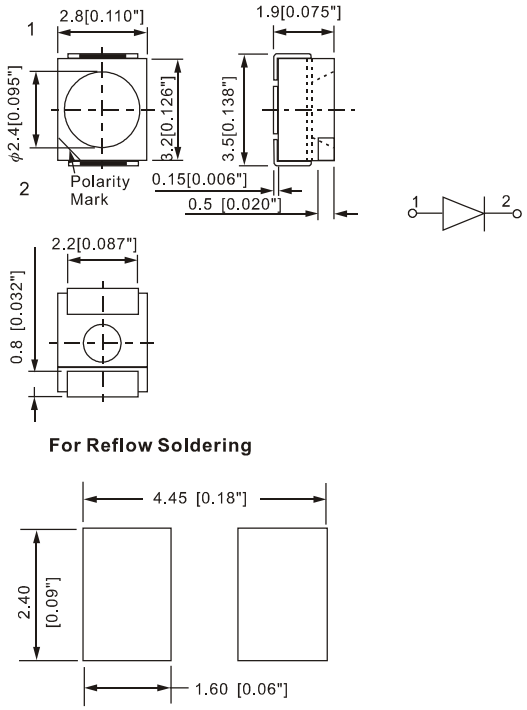

NOTES:1.All dimensions are in millimeters(inches);
2.Tolerances are ±0.2mm(.008inch) unless otherwise noted;
3.Resin color: water clear.

■ Absolute Maximun Ratings

	UNIT	SPEC.
IF	mA	30
IFp	mA	120
VR	V	5
Topr	℃	-20～+80
Tstg	℃	-20～+100

Part No.	Material	Emitted Color	V_f (V)		λ (nm)		Iv (mcd)	Viewing Angle 2 1/2θ
			Typ.	Max.	λ_d	λ_P	Typ.	
RSDA30TZ-WPG	AlGaInP	Red	1.90	2.40	631	640	60	120°
OLDA30TZ-WPG	AlGaInP	Orange	1.90	2.40	624	635	77	
ALDA30TZ-WPG	AlGaInP	Amber	1.90	2.40	595	600	86	
YVDA30TZ-WPE	AlGaInP	Yellow	2.00	2.50	593	595	66	
GBDA30TZ-WPG	AlGaInP	Green	2.10	2.60	578	575	43	
GEIA30TZ-WPG	InGaN	Green	3.20	3.80	527	525	138	
BJJA30TZ-WPH	GaInN	Blue	3.40	4.00	465	460	41	
BVEA30TZ-WPC	GaN/SiC	Blue	4.00	4.50	465	430	9	

REFLECTOR COATING TYPE HIGH-PERFORMANCE LEDS

GH-2030 Multi-Color Series

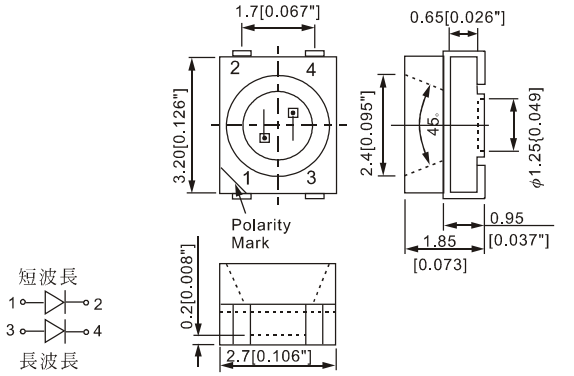

For Reflow Solderring

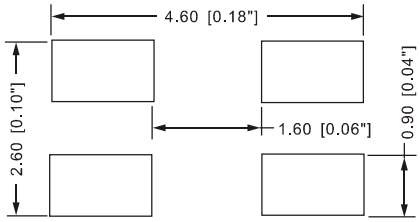

NOTES:1.All dimensions are in millimeters(inches);
2.Tolerances are ±0.2mm(.008inch) unless otherwise noted;
3.Resin color: water clear.

■ Absolute Maximun Ratings

	UNIT	SPEC.
IF	mA	30
IFP	mA	120
VR	V	5
Topr	℃	-20～+80
Tstg	℃	-20～+100

Part No.	Material	Emitted Color	V_f (V)		λ (nm)		Iv (mcd)	Viewing Angle 2 1/2θ
			Typ.	Max.	λ_d	λ_P	Typ.	
MBB930TZ-WPG	AlGaInP	Red	1.90	2.40	631	640	60	120°
	AlGaInP	Green	2.10	2.60	578	575	43	
MBAT30TZ-WPE	GaAsP	Orange	2.00	2.50	622	635	12	
	GaP	Green	2.20	2.70	570	565	18	
MBB230TZ-WPE	GaAsP	Amber	2.00	2.50	603	610	13	
	GaP	Green	2.20	2.70	570	565	18	
MBBH30TZ-WPE	InGaN	Green	3.20	3.60	527	525	138	
	GaInN	Blue	3.40	4.00	468	460	60	

REFLECTOR COATING TYPE HIGH-PERFORMANCE LEDS

GH-2030 Full-Color Series

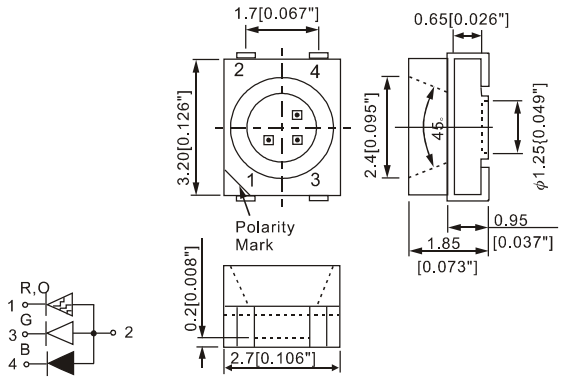

For Reflow Solderring

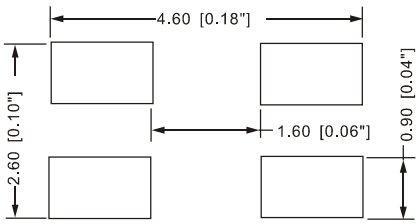

NOTES:1.All dimensions are in millimeters(inches);
2.Tolerances are ±0.2mm(.008inch) unless otherwise noted;
3.Resin color: water clear.

■ Absolute Maximun Ratings

	UNIT	SPEC.
IF	mA	30
IFp	mA	120
VR	V	5
Topr	℃	-20～+80
Tstg	℃	-20～+100

Part No.	Material	Emitted Color	V_f (V)		λ (nm)		Iv (mcd)	Viewing Angle 2 1/2θ
			Typ.	Max.	λ_d	λ_P	Typ.	
WCB330TZ-WBE	GaAlAs	Red	1.80	2.30	643	656	23	120°
	GaP	Green	2.15	2.60	572	566	20	
	GaN/SiC	Blue	4.00	4.50	465	430	9.0	
WCAG30TZ-WBG	AlGaInP	Red	1.90	2.40	631	643	60	
	InGaN	Green	3.20	3.60	527	525	138	
	GaInN	Blue	3.30	3.80	468	465	44	
WCAH30TZ-WBG	AlGaInP	Orange	1.95	2.50	615	620	86	
	InGaP	Green	3.30	4.00	509	505	138	
	GaInP	Blue	3.30	3.80	468	465	44	