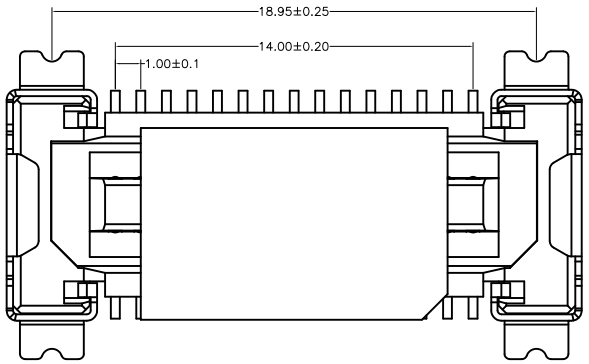

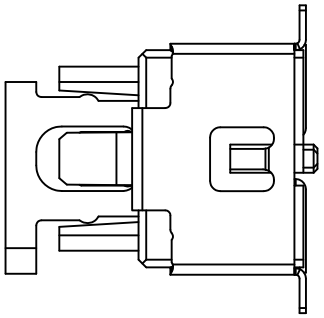

NOTES: MATERIAL & FINISH

1.MATERIAL:
HOUSING:LCP(UL 94V-0)
ACTUATOR:LCP(UL 94V-0)
TERMINAL:COPPER ALLOY
SOLDER PIN:COPPER ALLOY

2.PLATING:
TERMINAL:GOLD FLASH OVER NICKEL
SOLDER PIN:TIN OVER NICKEL(LEAD FREE)

3.ORDER INFORMATION

THD1020 – 30 B– GF

NO. OF CONTACTS

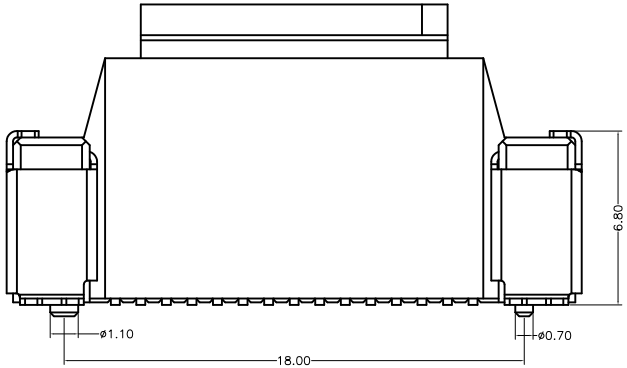

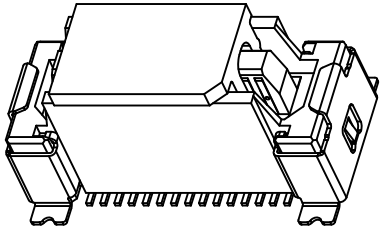

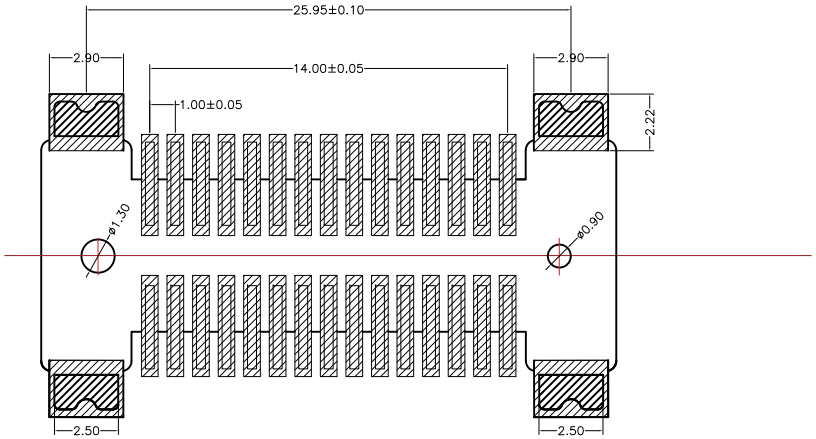

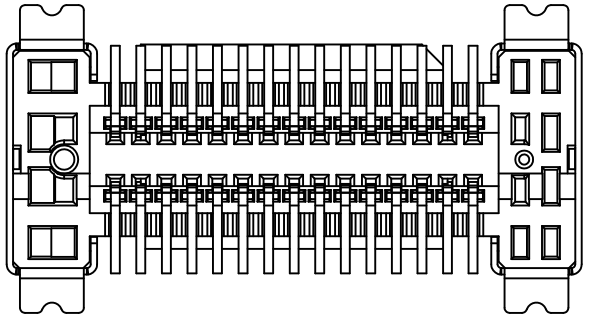

深圳市台华达科技有限公司
SHENZHENSHI THD ELECTRONICS CO., LTD.

REV.	REVISIONS	CHK	DATE
A	Release	Jacky	2012/05/24

GENERAL TOLERANCE UNLESS OTHERWISE SPECIFIED
X.X ±0.25
X.XX ±0.15
X.XXX
ANG. ±3°

DRAWN Jim 2012.05.24
CHECKED Jim 2012.05.24
APPROVED 黄德进

PART NO. THD1020-30B-GF

TITLE: 1.0 PITCH BOTOBO CONN. LOWER CONTACT H=20mm 母座

SHEET 1/2

UNIT	SCALE	SIZE	REV
MM	10:1	A4	A