THIS DRAWING IS UNPUBLISHED. RELEASED FOR PUBLICATION ,1995 .
© COPYRIGHT 1995 ALL RIGHTS RESERVED.

LOC	DIST
J	

REVISIONS
変更

P	LTR	DESCRIPTION	DATE	DWN	APVD
	D	REVISED PER ECR-16-008312	08JUN16	K.K	E.T

注 記

1. 材料 ハウジング ガラス入り熱可塑性 ポリエステル樹脂(94V-0),~~色 黒~~
2. ~~ハウジング全面にテフロン塗装の~~こと

NOTES

1. MATERIAL:HOUSING:GLASS FILED THERMO PLASTIC ,POLYESTER(94V-0),~~COLOR:BLACK~~
2. ~~TO COAT ALL SURFACE OF HOUSING WITH TEFLON~~

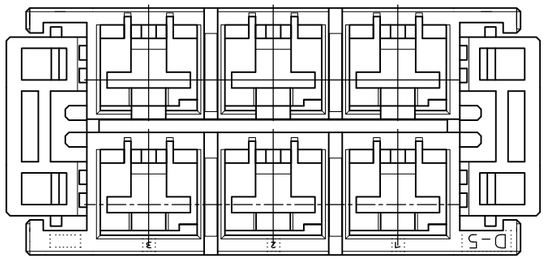

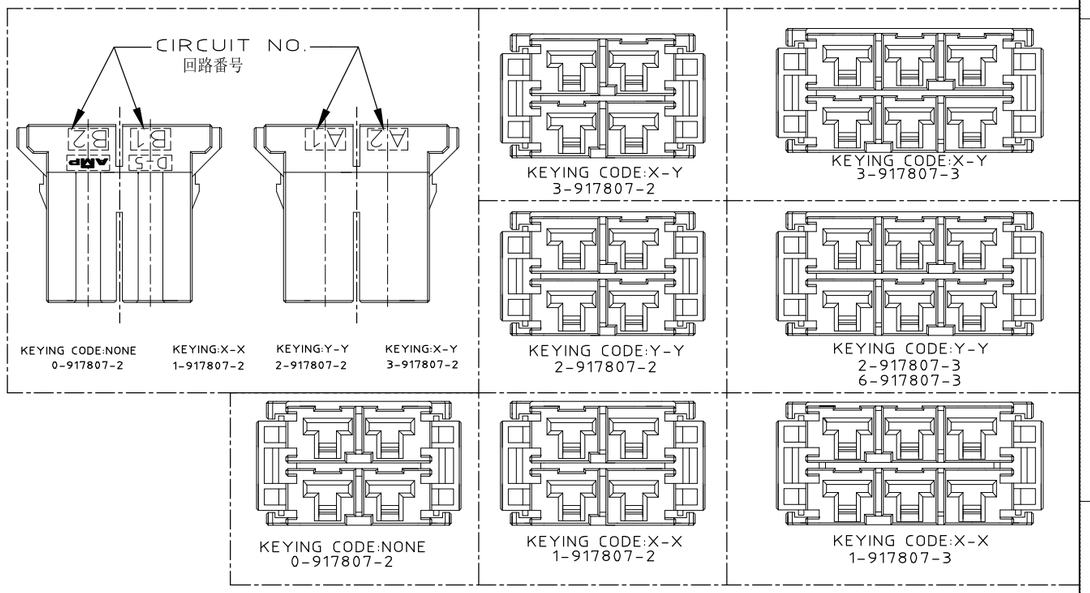

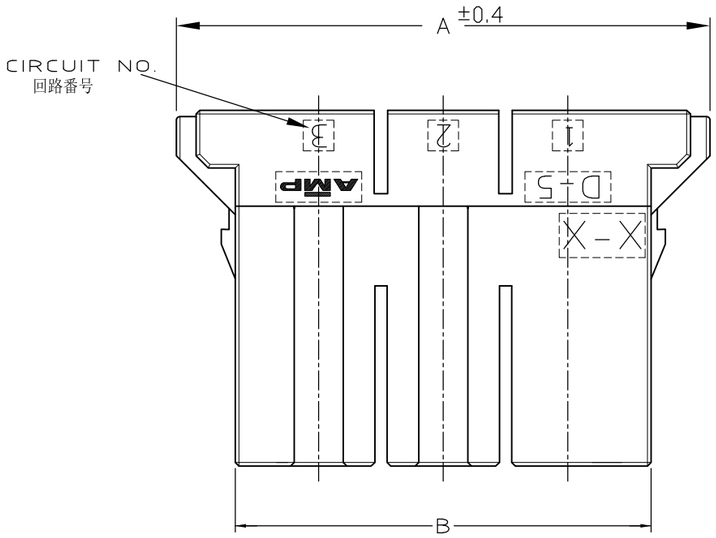

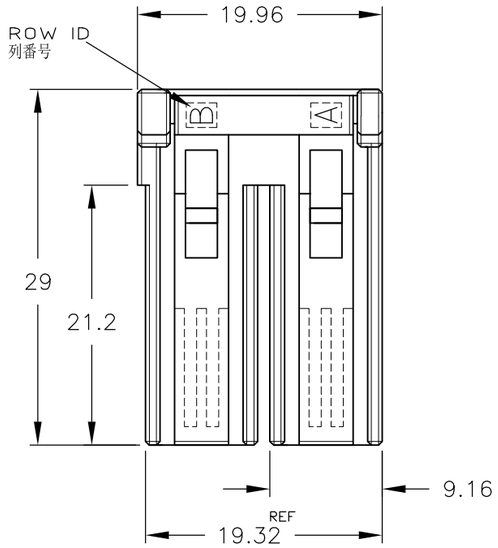

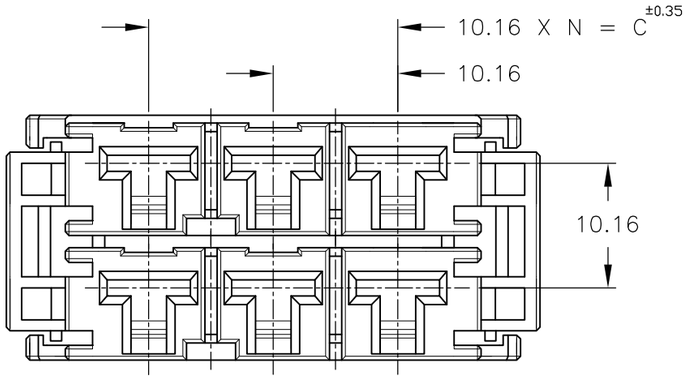

KEYING CODE:X-X
1-917807-3

		YELLOW	20.32	33.92	43.52	2	6	6-917807-3
OBSOLETE	2	——						~~5-917807-3~~
		BLACK						3-917807-3
		BLACK						2-917807-3
		BLACK	20.32	33.92	43.52	2	6	1-917807-3
OBSOLETE	2	——						~~6-917807-2~~
OBSOLETE	2	——						~~5-917807-2~~
		BLACK						3-917807-2
		BLACK						2-917807-2
		BLACK						1-917807-2
		BLACK	10.16	23.76	33.36	1	4	0-917807-2
	FINISH	COLOR	C	B	A	N	POS	P/N

WIRE RANGE 抱合電線断面積 | INSULATION DIA 被覆外径

DIMENSIONS: 単位 特 mm

TOLERANCES UNLESS OTHERWISE SPECIFIED
一般公差
10 : ±0.2
30 >10 : ±0.25
100 >30 : ±0.3
ANGLE : ±0.3°

MATERIAL 材料 1

FINISH 仕上

DWN K.IKEDA 31/OCT/'95
CHK Y.ISHIKAWA 31/OCT/'95
APVD S.MANABE 1/NOV/'95
PRODUCT SPEC 製品規格 108-5453
APPLICATION SPEC 取付適用規格 114-5206
WEIGHT T1

TE Connectivity

NAME 名称: 2列 リセ ハウジング
DOUBLE ROW REC HSG
<DYNAMIC D-5200 M>

SIZE A3 | CAGE CODE 00779 | DRAWING NO 番号 917807

CUSTOMER DRAWING

SCALE 尺度 2-1 | SHEET 1 OF 1 | REV D

顧客用図面