To all our customers

Regarding the change of names mentioned in the document, such as Hitachi Electric and Hitachi XX, to Renesas Technology Corp.

The semiconductor operations of Mitsubishi Electric and Hitachi were transferred to Renesas Technology Corporation on April 1st 2003. These operations include microcomputer, logic, analog and discrete devices, and memory chips other than DRAMs (flash memory, SRAMs etc.) Accordingly, although Hitachi, Hitachi, Ltd., Hitachi Semiconductors, and other Hitachi brand names are mentioned in the document, these names have in fact all been changed to Renesas Technology Corp. Thank you for your understanding. Except for our corporate trademark, logo and corporate statement, no changes whatsoever have been made to the contents of the document, and these changes do not constitute any alteration to the contents of the document itself.

Renesas Technology Home Page: http://www.renesas.com

Renesas Technology Corp.
Customer Support Dept.
April 1, 2003

Cautions

Keep safety first in your circuit designs!

1. Renesas Technology Corporation puts the maximum effort into making semiconductor products better and more reliable, but there is always the possibility that trouble may occur with them. Trouble with semiconductors may lead to personal injury, fire or property damage.
   Remember to give due consideration to safety when making your circuit designs, with appropriate measures such as (i) placement of substitutive, auxiliary circuits, (ii) use of nonflammable material or (iii) prevention against any malfunction or mishap.

Notes regarding these materials

1. These materials are intended as a reference to assist our customers in the selection of the Renesas Technology Corporation product best suited to the customer's application; they do not convey any license under any intellectual property rights, or any other rights, belonging to Renesas Technology Corporation or a third party.
2. Renesas Technology Corporation assumes no responsibility for any damage, or infringement of any third-party's rights, originating in the use of any product data, diagrams, charts, programs, algorithms, or circuit application examples contained in these materials.
3. All information contained in these materials, including product data, diagrams, charts, programs and algorithms represents information on products at the time of publication of these materials, and are subject to change by Renesas Technology Corporation without notice due to product improvements or other reasons. It is therefore recommended that customers contact Renesas Technology Corporation or an authorized Renesas Technology Corporation product distributor for the latest product information before purchasing a product listed herein.
   The information described here may contain technical inaccuracies or typographical errors.
   Renesas Technology Corporation assumes no responsibility for any damage, liability, or other loss rising from these inaccuracies or errors.
   Please also pay attention to information published by Renesas Technology Corporation by various means, including the Renesas Technology Corporation Semiconductor home page (http://www.renesas.com).
4. When using any or all of the information contained in these materials, including product data, diagrams, charts, programs, and algorithms, please be sure to evaluate all information as a total system before making a final decision on the applicability of the information and products. Renesas Technology Corporation assumes no responsibility for any damage, liability or other loss resulting from the information contained herein.
5. Renesas Technology Corporation semiconductors are not designed or manufactured for use in a device or system that is used under circumstances in which human life is potentially at stake. Please contact Renesas Technology Corporation or an authorized Renesas Technology Corporation product distributor when considering the use of a product contained herein for any specific purposes, such as apparatus or systems for transportation, vehicular, medical, aerospace, nuclear, or undersea repeater use.
6. The prior written approval of Renesas Technology Corporation is necessary to reprint or reproduce in whole or in part these materials.
7. If these products or technologies are subject to the Japanese export control restrictions, they must be exported under a license from the Japanese government and cannot be imported into a country other than the approved destination.
   Any diversion or reexport contrary to the export control laws and regulations of Japan and/or the country of destination is prohibited.
8. Please contact Renesas Technology Corporation for further details on these materials or the products contained therein.

Hitachi Single-Chip Microcomputer

H8/3672 Series

H8/3672
HD64F3672
H8/3670
HD64F3670

Hardware Manual

ADE-602-239A

Rev. 2.0
03/20/02
Hitachi, Ltd.

Cautions

1. Hitachi neither warrants nor grants licenses of any rights of Hitachi's or any third party's patent, copyright, trademark, or other intellectual property rights for information contained in this document. Hitachi bears no responsibility for problems that may arise with third party's rights, including intellectual property rights, in connection with use of the information contained in this document.
2. Products and product specifications may be subject to change without notice. Confirm that you have received the latest product standards or specifications before final design, purchase or use.
3. Hitachi makes every attempt to ensure that its products are of high quality and reliability. However, contact Hitachi's sales office before using the product in an application that demands especially high quality and reliability or where its failure or malfunction may directly threaten human life or cause risk of bodily injury, such as aerospace, aeronautics, nuclear power, combustion control, transportation, traffic, safety equipment or medical equipment for life support.
4. Design your application so that the product is used within the ranges guaranteed by Hitachi particularly for maximum rating, operating supply voltage range, heat radiation characteristics, installation conditions and other characteristics. Hitachi bears no responsibility for failure or damage when used beyond the guaranteed ranges. Even within the guaranteed ranges, consider normally foreseeable failure rates or failure modes in semiconductor devices and employ systemic measures such as fail-safes, so that the equipment incorporating Hitachi product does not cause bodily injury, fire or other consequential damage due to operation of the Hitachi product.
5. This product is not designed to be radiation resistant.
6. No one is permitted to reproduce or duplicate, in any form, the whole or part of this document without written approval from Hitachi.
7. Contact Hitachi's sales office for any questions regarding this document or Hitachi semiconductor products.

General Precautions on Handling of Product

1. Treatment of NC Pins

Note: Do not connect anything to the NC pins.
The NC (not connected) pins are either not connected to any of the internal circuitry or are used as test pins or to reduce noise. If something is connected to the NC pins, the operation of the LSI is not guaranteed.

2. Treatment of Unused Input Pins

Note: Fix all unused input pins to high or low level.
Generally, the input pins of CMOS products are high-impedance input pins. If unused pins are in their open states, intermediate levels are induced by noise in the vicinity, a pass-through current flows internally, and a malfunction may occur.

3. Processing before Initialization

Note: When power is first supplied, the product's state is undefined.
The states of internal circuits are undefined until full power is supplied throughout the chip and a low level is input on the reset pin. During the period where the states are undefined, the register settings and the output state of each pin are also undefined. Design your system so that it does not malfunction because of processing while it is in this undefined state. For those products which have a reset function, reset the LSI immediately after the power supply has been turned on.

4. Prohibition of Access to Undefined or Reserved Addresses

Note: Access to undefined or reserved addresses is prohibited.
The undefined or reserved addresses may be used to expand functions, or test registers may have been be allocated to these addresses. Do not access these registers; the system's operation is not guaranteed if they are accessed.

Configuration of This Manual

This manual comprises the following items:

1. General Precautions on Handling of Product
2. Configuration of This Manual
3. Preface
4. Contents
5. Overview
6. Description of Functional Modules
   - CPU and System-Control Modules
   - On-Chip Peripheral Modules

     The configuration of the functional description of each module differs according to the module. However, the generic style includes the following items:

   i) Feature
   ii) Input/Output Pin
   iii) Register Description
   iv) Operation
   v) Usage Note

When designing an application system that includes this LSI, take notes into account. Each section includes notes in relation to the descriptions given, and usage notes are given, as required, as the final part of each section.

7. List of Registers
8. Electrical Characteristics
9. Appendix
10. Main Revisions and Additions in this Edition (only for revised versions)

The list of revisions is a summary of points that have been revised or added to earlier versions. This does not include all of the revised contents. For details, see the actual locations in this manual.

11. Index

Preface

The H8/3672 Series are single-chip microcomputers made up of the high-speed H8/300H CPU employing Hitachi's original architecture as their cores, and the peripheral functions required to configure a system. The H8/300H CPU has an instruction set that is compatible with the H8/300 CPU.

Target Users: This manual was written for users who will be using the H8/3672 Series in the design of application systems. Target users are expected to understand the fundamentals of electrical circuits, logical circuits, and microcomputers.

Objective: This manual was written to explain the hardware functions and electrical characteristics of the H8/3672 Series to the target users.
Refer to the H8/300H Series Programming Manual for a detailed description of the instruction set.

Notes on reading this manual:

- In order to understand the overall functions of the chip

  Read the manual according to the contents. This manual can be roughly categorized into parts on the CPU, system control functions, peripheral functions and electrical characteristics.
- In order to understand the details of the CPU's functions

  Read the H8/300H Series Programming Manual.
- In order to understand the details of a register when its name is known

  Read the index that is the final part of the manual to find the page number of the entry on the register. The addresses, bits, and initial values of the registers are summarized in section 16, List of Registers.

  Example: Bit order: The MSB is on the left and the LSB is on the right.

Notes:

When using an on-chip emulator (E10T) for H8/3672 program development and debugging, the following restrictions must be noted.

1. The $\overline{\text{NMI}}$ pin is reserved for the E10T, and cannot be used.
2. Area H'4000 to H'4FFF is used by the E10T, and is not available to the user.
3. Area H'F780 to H'FB7F must on no account be accessed.
4. When the E10T is used, address breaks can be set as either available to the user or for use by the E10T. If address breaks are set as being used by the E10T, the address break control registers must not be accessed.
5. When the E10T is used, $\overline{\text{NMI}}$ is an input/output pin (open-drain in output mode).

Related Manuals: The latest versions of all related manuals are available from our web site. Please ensure you have the latest versions of all documents you require. http://www.hitachisemiconductor.com/

H8/3672 Series manuals:

Manual Title	ADE No.
H8/3672 Series Hardware Manual	This manual
H8/300H Series Programming Manual	ADE-602-053

User's manuals for development tools:

Manual Title	ADE No.
H8S, H8/300 Series C/C++ Compiler, Assembler, Optimizing Linkage Editor User's Manual	ADE-702-247
H8S, H8/300 Series Simulator/Debugger User's Manual	ADE-702-282
H8S, H8/300 Series Hitachi Embedded Workshop, Hitachi Debugging Interface Tutorial	ADE-702-231
Hitachi Embedded Workshop User's Manual	ADE-702-201

Application notes:

Manual Title	ADE No.
Single Power Supply F-ZTAT™ On-Board Programming	ADE-502-055

Contents

Section 1 Overview 1
1.1 Features 1
1.2 Internal Block Diagram 2
1.3 Pin Arrangement 3
1.4 Pin Functions 5

Section 2 CPU 7
2.1 Address Space and Memory Map 8
2.2 Register Configuration 9
2.2.1 General Registers 10
2.2.2 Program Counter (PC) 11
2.2.3 Condition-Code Register (CCR) 11
2.3 Data Formats 13
2.3.1 General Register Data Formats 13
2.3.2 Memory Data Formats 15
2.4 Instruction Set 16
2.4.1 Table of Instructions Classified by Function 16
2.4.2 Basic Instruction Formats 25
2.5 Addressing Modes and Effective Address Calculation 27
2.5.1 Addressing Modes 27
2.5.2 Effective Address Calculation 29
2.6 Basic Bus Cycle 32
2.6.1 Access to On-Chip Memory (RAM, ROM) 32
2.6.2 On-Chip Peripheral Modules 33
2.7 CPU States 34
2.8 Usage Notes 35
2.8.1 Notes on Data Access to Empty Areas 35
2.8.2 EEPMOV Instruction 35
2.8.3 Bit Manipulation Instruction 35

Section 3 Exception Handling 41
3.1 Exception Sources and Vector Address 42
3.2 Register Descriptions 43
3.2.1 Interrupt Edge Select Register 1 (IEGR1) 43
3.2.2 Interrupt Edge Select Register 2 (IEGR2) 44
3.2.3 Interrupt Enable Register 1 (IENR1) 45
3.2.4 Interrupt Flag Register 1 (IRR1) 46
3.2.5 Wakeup Interrupt Flag Register (IWPR) 47
3.3 Reset Exception Handling 48

3.4 Interrupt Exception Handling 48
3.4.1 External Interrupts 48
3.4.2 Internal Interrupts 49
3.4.3 Interrupt Handling Sequence 49
3.4.4 Interrupt Response Time 51
3.5 Usage Notes 53
3.5.1 Interrupts after Reset 53
3.5.2 Notes on Stack Area Use 53
3.5.3 Notes on Rewriting Port Mode Registers 53

Section 4 Address Break 55
4.1 Register Descriptions 55
4.1.1 Address Break Control Register (ABRKCR) 56
4.1.2 Address Break Status Register (ABRKSR) 57
4.1.3 Break Address Registers (BARH, BARL) 57
4.1.4 Break Data Registers (BDRH, BDRL) 57
4.2 Operation 58
4.3 Usage Notes 59

Section 5 Clock Pulse Generators 61
5.1 System Clock Generator 61
5.1.1 Connecting Crystal Resonator 62
5.1.2 Connecting Ceramic Resonator 62
5.1.3 External Clock Input Method 63
5.2 Prescalers 63
5.2.1 Prescaler S 63
5.3 Usage Notes 63
5.3.1 Note on Resonators 63
5.3.2 Notes on Board Design 64

Section 6 Power-Down Modes 65
6.1 Register Descriptions 66
6.1.1 System Control Register 1 (SYSCR1) 66
6.1.2 System Control Register 2 (SYSCR2) 68
6.1.3 Module Standby Control Register 1 (MSTCR1) 69
6.2 Mode Transitions and States of LSI 70
6.2.1 Sleep Mode 72
6.2.2 Standby Mode 72
6.2.3 Subsleep Mode 72
6.3 Operating Frequency in Active Mode 73
6.4 Direct Transition 73
6.5 Module Standby Function 73

Section 7 ROM 75
7.1 Block Configuration 75
7.2 Register Descriptions 76
7.2.1 Flash Memory Control Register 1 (FLMCR1) 77
7.2.2 Flash Memory Control Register 2 (FLMCR2) 78
7.2.3 Erase Block Register 1 (EBR1) 78
7.2.4 Flash Memory Enable Register (FENR) 79
7.3 On-Board Programming Modes 79
7.3.1 Boot Mode 80
7.3.2 Programming/Erasing in User Program Mode 82
7.4 Flash Memory Programming/Erasing 83
7.4.1 Program/Program-Verify 83
7.4.2 Erase/Erase-Verify 85
7.4.3 Interrupt Handling when Programming/Erasing Flash Memory 86
7.5 Program/Erase Protection 88
7.5.1 Hardware Protection 88
7.5.2 Software Protection 88
7.5.3 Error Protection 88

Section 8 RAM 89

Section 9 I/O Ports 91
9.1 Port 1 91
9.1.1 Port Mode Register 1 (PMR1) 92
9.1.2 Port Control Register 1 (PCR1) 93
9.1.3 Port Data Register 1 (PDR1) 93
9.1.4 Port Pull-Up Control Register 1 (PUCR1) 94
9.1.5 Pin Functions 94
9.2 Port 2 96
9.2.1 Port Control Register 2 (PCR2) 96
9.2.2 Port Data Register 2 (PDR2) 97
9.2.3 Pin Functions 97
9.3 Port 5 98
9.3.1 Port Mode Register 5 (PMR5) 99
9.3.2 Port Control Register 5 (PCR5) 100
9.3.3 Port Data Register 5 (PDR5) 100
9.3.4 Port Pull-Up Control Register 5 (PUCR5) 101
9.3.5 Pin Functions 101
9.4 Port 7 103
9.4.1 Port Control Register 7 (PCR7) 104
9.4.2 Port Data Register 7 (PDR7) 104
9.4.3 Pin Functions 105
9.5 Port 8 106

9.5.1 Port Control Register 8 (PCR8) ... 106
9.5.2 Port Data Register 8 (PDR8) ... 107
9.5.3 Pin Functions ... 107
9.6 Port B ... 109
9.6.1 Port Data Register B (PDRB) ... 110

Section 10 Timer V ... 111
10.1 Features ... 111
10.2 Input/Output Pins ... 112
10.3 Register Descriptions ... 113
10.3.1 Timer Counter V (TCNTV) ... 113
10.3.2 Time Constant Registers A and B (TCORA, TCORB) ... 113
10.3.3 Timer Control Register V0 (TCRV0) ... 114
10.3.4 Timer Control/Status Register V (TCSRV) ... 116
10.3.5 Timer Control Register V1 (TCRV1) ... 117
10.4 Operation ... 118
10.4.1 Timer V Operation ... 118
10.5 Timer V Application Examples ... 121
10.5.1 Pulse Output with Arbitrary Duty Cycle ... 121
10.5.2 Pulse Output with Arbitrary Pulse Width and Delay from TRGV Input ... 122
10.6 Usage Notes ... 123

Section 11 Timer W ... 125
11.1 Features ... 125
11.2 Input/Output Pins ... 127
11.3 Register Descriptions ... 128
11.3.1 Timer Mode Register W (TMRW) ... 129
11.3.2 Timer Control Register W (TCRW) ... 129
11.3.3 Timer Interrupt Enable Register W (TIERW) ... 131
11.3.4 Timer Status Register W (TSRW) ... 131
11.3.5 Timer I/O Control Register 0 (TIOR0) ... 133
11.3.6 Timer I/O Control Register 1 (TIOR1) ... 134
11.3.7 Timer Counter (TCNT) ... 135
11.3.8 General Registers A to D (GRA to GRD) ... 135
11.4 Operation ... 136
11.4.1 Normal Operation ... 136
11.4.2 PWM Operation ... 140
11.5 Operation Timing ... 144
11.5.1 TCNT Count Timing ... 144
11.5.2 Output Compare Output Timing ... 144
11.5.3 Input Capture Timing ... 145
11.5.4 Timing of Counter Clearing by Compare Match ... 146
11.5.5 Buffer Operation Timing ... 146

11.5.6 Timing of IMFA to IMFD Flag Setting at Compare Match 147
11.5.7 Timing of IMFA to IMFD Setting at Input Capture 148
11.5.8 Timing of Status Flag Clearing 148
11.6 Usage Notes 149

Section 12 Watchdog Timer 151
12.1 Features 151
12.2 Register Descriptions 151
12.2.1 Timer Control/Status Register WD (TCSRWD) 152
12.2.2 Timer Counter WD (TCWD) 153
12.2.3 Timer Mode Register WD (TMWD) 153
12.3 Operation 154

Section 13 Serial Communication Interface3 (SCI3) 155
13.1 Features 155
13.2 Input/Output Pins 157
13.3 Register Descriptions 157
13.3.1 Receive Shift Register (RSR) 158
13.3.2 Receive Data Register (RDR) 158
13.3.3 Transmit Shift Register (TSR) 158
13.3.4 Transmit Data Register (TDR) 158
13.3.5 Serial Mode Register (SMR) 159
13.3.6 Serial Control Register 3 (SCR3) 160
13.3.7 Serial Status Register (SSR) 162
13.3.8 Bit Rate Register (BRR) 164
13.4 Operation in Asynchronous Mode 169
13.4.1 Clock 169
13.4.2 SCI3 Initialization 170
13.4.3 Data Transmission 171
13.4.4 Serial Data Reception 173
13.5 Operation in Clocked Synchronous Mode 177
13.5.1 Clock 177
13.5.2 SCI3 Initialization 177
13.5.3 Serial Data Transmission 178
13.5.4 Serial Data Reception (Clocked Synchronous Mode) 180
13.5.5 Simultaneous Serial Data Transmission and Reception 182
13.6 Multiprocessor Communication Function 184
13.6.1 Multiprocessor Serial Data Transmission 186
13.6.2 Multiprocessor Serial Data Reception 187
13.7 Interrupts 191
13.8 Usage Notes 192
13.8.1 Break Detection and Processing 192
13.8.2 Mark State and Break Sending 192

13.8.3 Receive Error Flags and Transmit Operations (Clocked Synchronous Mode Only) 192
13.8.4 Receive Data Sampling Timing and Reception Margin in Asynchronous Mode 193

Section 14 A/D Converter 195
14.1 Features 195
14.2 Input/Output Pins 197
14.3 Register Description 198
14.3.1 A/D Data Registers A to D (ADDRA to ADDRD) 198
14.3.2 A/D Control/Status Register (ADCSR) 199
14.3.3 A/D Control Register (ADCR) 200
14.4 Operation 201
14.4.1 Single Mode 201
14.4.2 Scan Mode 201
14.4.3 Input Sampling and A/D Conversion Time 202
14.4.4 External Trigger Input Timing 203
14.5 A/D Conversion Accuracy Definitions 204
14.6 Usage Notes 205
14.6.1 Permissible Signal Source Impedance 205
14.6.2 Influences on Absolute Accuracy 205

Section 15 Power Supply Circuit 207
15.1 When Using Internal Power Supply Step-Down Circuit 207
15.2 When Not Using Internal Power Supply Step-Down Circuit 208

Section 16 List of Registers 209
16.1 Register Addresses (Address Order) 210
16.2 Register Bits 213
16.3 Register States in Each Operating Mode 216

Section 17 Electrical Characteristics 219
17.1 Absolute Maximum Ratings 219
17.2 Electrical Characteristics 219
17.2.1 Power Supply Voltage and Operating Ranges 219
17.2.2 DC Characteristics 221
17.2.3 AC Characteristics 226
17.2.4 A/D Converter Characteristics 229
17.2.5 Watchdog Timer 230
17.2.6 Flash Memory Characteristics (Preliminary) 231
17.3 Operation Timing 233
17.4 Output Load Condition 235

Appendix A Instruction Set 237
A.1 Instruction List 237
A.2 Operation Code Map 252
A.3 Number of Execution States 255
A.4 Combinations of Instructions and Addressing Modes 266

Appendix B I/O Port Block Diagrams 267
B.1 I/O Port Block 267
B.2 Port States in Each Operating State 282

Appendix C Product Code Lineup 283

Appendix D Package Dimensions 284

Main Revisions and Additions in this Edition 287

Index 295

Figures

Section 1 Overview
Figure 1.1 Internal Block Diagram 2
Figure 1.2 Pin Arrangement (FP-64E) 3
Figure 1.3 Pin Arrangement (FP-48F, FP-48B) 4

Section 2 CPU
Figure 2.1 Memory Map 8
Figure 2.2 CPU Registers 9
Figure 2.3 Usage of General Registers 10
Figure 2.4 Relationship between Stack Pointer and Stack Area 11
Figure 2.5 General Register Data Formats (1) 13
Figure 2.5 General Register Data Formats (2) 14
Figure 2.6 Memory Data Formats 15
Figure 2.7 Instruction Formats 26
Figure 2.8 Branch Address Specification in Memory Indirect Mode 29
Figure 2.9 On-Chip Memory Access Cycle 32
Figure 2.10 On-Chip Peripheral Module Access Cycle (3-State Access) 33
Figure 2.11 CPU Operation States 34
Figure 2.12 State Transitions 35
Figure 2.13 Example of Timer Configuration with Two Registers Allocated to Same Address 36

Section 3 Exception Handling
Figure 3.1 Reset Sequence 49
Figure 3.2 Stack Status after Exception Handling 50
Figure 3.3 Interrupt Sequence 52
Figure 3.4 Port Mode Register Setting and Interrupt Request Flag Clearing Procedure 53

Section 4 Address Break
Figure 4.1 Block Diagram of Address Break 55
Figure 4.2 Address Break Interrupt Operation Example (1) 58
Figure 4.2 Address Break Interrupt Operation Example (2) 59
Figure 4.3 Operation when Condition is not Satisfied in Branch Instruction 59
Figure 4.4 Operation when Another Interrupt is Accepted at Address Break Setting Instruction 60

Section 5 Clock Pulse Generators
Figure 5.1 Block Diagram of Clock Pulse Generators 61
Figure 5.2 Block Diagram of System Clock Generator 61
Figure 5.3 Typical Connection to Crystal Resonator 62
Figure 5.4 Equivalent Circuit of Crystal Resonator 62
Figure 5.5 Typical Connection to Ceramic Resonator 62

Figure 5.6 Example of External Clock Input 63
Figure 5.7 Example of Incorrect Board Design 64

Section 6 Power-Down Modes
Figure 6.1 Mode Transition Diagram 70

Section 7 ROM
Figure 7.1 Flash Memory Block Configuration 76
Figure 7.2 Programming/Erasing Flowchart Example in User Program Mode 82
Figure 7.3 Program/Program-Verify Flowchart 84
Figure 7.4 Erase/Erase-Verify Flowchart 87

Section 9 I/O Ports
Figure 9.1 Port 1 Pin Configuration 91
Figure 9.2 Port 2 Pin Configuration 96
Figure 9.3 Port 5 Pin Configuration 98
Figure 9.4 Port 7 Pin Configuration 103
Figure 9.5 Port 8 Pin Configuration 106
Figure 9.6 Port B Pin Configuration 109

Section 10 Timer V
Figure 10.1 Block Diagram of Timer V 112
Figure 10.2 Increment Timing with Internal Clock 118
Figure 10.3 Increment Timing with External Clock 119
Figure 10.4 OVF Set Timing 119
Figure 10.5 CMFA and CMFB Set Timing 119
Figure 10.6 TMOV Output Timing 120
Figure 10.7 Clear Timing by Compare Match 120
Figure 10.8 Clear Timing by TMRIV Input 120
Figure 10.9 Pulse Output Example 121
Figure 10.10 Example of Pulse Output Synchronized to TRGV Input 122
Figure 10.11 Contention between TCNTV Write and Clear 123
Figure 10.12 Contention between TCORA Write and Compare Match 124
Figure 10.13 Internal Clock Switching and TCNTV Operation 124

Section 11 Timer W
Figure 11.1 Timer W Block Diagram 127
Figure 11.2 Free-Running Counter Operation 136
Figure 11.3 Periodic Counter Operation 137
Figure 11.4 0 and 1 Output Example (TOA = 0, TOB = 1) 137
Figure 11.5 Toggle Output Example (TOA = 0, TOB = 1) 138
Figure 11.6 Toggle Output Example (TOA = 0, TOB = 1) 138
Figure 11.7 Input Capture Operating Example 139
Figure 11.8 Buffer Operation Example (Input Capture) 139
Figure 11.9 PWM Mode Example (1) 140
Figure 11.10 PWM Mode Example (2) 141

Figure 11.11 Buffer Operation Example (Output Compare) 141
Figure 11.12 PWM Mode Example
(TOB, TOC, and TOD = 0: initial output values are set to 0) 142
Figure 11.13 PWM Mode Example
(TOB, TOC, and TOD = 1: initial output values are set to 1) 143
Figure 11.14 Count Timing for Internal Clock Source 144
Figure 11.15 Count Timing for External Clock Source 144
Figure 11.16 Output Compare Output Timing 145
Figure 11.17 Input Capture Input Signal Timing 145
Figure 11.18 Timing of Counter Clearing by Compare Match 146
Figure 11.19 Buffer Operation Timing (Compare Match) 146
Figure 11.20 Buffer Operation Timing (Input Capture) 147
Figure 11.21 Timing of IMFA to IMFD Flag Setting at Compare Match 147
Figure 11.22 Timing of IMFA to IMFD Flag Setting at Input Capture 148
Figure 11.23 Timing of Status Flag Clearing by CPU 148
Figure 11.24 Contention between TCNT Write and Clear 149
Figure 11.25 Internal Clock Switching and TCNT Operation 150

Section 12 Watchdog Timer

Figure 12.1 Block Diagram of Watchdog Timer 151
Figure 12.2 Watchdog Timer Operation Example 154

Section 13 Serial Communication Interface3 (SCI3)

Figure 13.1 Block Diagram of SCI3 156
Figure 13.2 Data Format in Asynchronous Communication 169
Figure 13.3 Relationship between Output Clock and Transfer Data Phase
(Asynchronous Mode)(Example with 8-Bit Data, Parity, Two Stop Bits) 169
Figure 13.4 Sample SCI3 Initialization Flowchart 170
Figure 13.5 Example SCI3 Operation in Transmission in Asynchronous Mode
(8-Bit Data, Parity, One Stop Bit) 171
Figure 13.6 Sample Serial Transmission Flowchart (Asynchronous Mode) 172
Figure 13.7 Example SCI3 Operation in Reception in Asynchronous Mode
(8-Bit Data, Parity, One Stop Bit) 173
Figure 13.8 Sample Serial Data Reception Flowchart (Asynchronous mode)(1) 175
Figure 13.8 Sample Serial Reception Data Flowchart (2) 176
Figure 13.9 Data Format in Clocked Synchronous Communication 177
Figure 13.10 Example of SCI3 Operation in Transmission in Clocked Synchronous Mode 178
Figure 13.11 Sample Serial Transmission Flowchart (Clocked Synchronous Mode) 179
Figure 13.12 Example of SCI3 Reception Operation in Clocked Synchronous Mode 180
Figure 13.13 Sample Serial Reception Flowchart (Clocked Synchronous Mode) 181
Figure 13.14 Sample Flowchart of Simultaneous Serial Transmit and Receive Operations
(Clocked Synchronous Mode) 183
Figure 13.15 Example of Communication Using Multiprocessor Format
(Transmission of Data H'AA to Receiving Station A) 185

Figure 13.16 Sample Multiprocessor Serial Transmission Flowchart 186
Figure 13.17 Sample Multiprocessor Serial Reception Flowchart (1) 188
Figure 13.17 Sample Multiprocessor Serial Reception Flowchart (2) 189
Figure 13.18 Example of SCI3 Operation in Reception Using Multiprocessor Format (Example with 8-Bit Data, Multiprocessor Bit, One Stop Bit) 190
Figure 13.19 Receive Data Sampling Timing in Asynchronous Mode 193

Section 14 A/D Converter

Figure 14.1 Block Diagram of A/D Converter 196
Figure 14.2 A/D Conversion Timing 202
Figure 14.3 External Trigger Input Timing 203
Figure 14.4 A/D Conversion Accuracy Definitions (1) 204
Figure 14.5 A/D Conversion Accuracy Definitions (2) 205
Figure 14.6 Analog Input Circuit Example 206

Section 15 Power Supply Circuit

Figure 15.1 Power Supply Connection when Internal Step-Down Circuit is Used 207
Figure 15.2 Power Supply Connection when Internal Step-Down Circuit is Not Used 208

Section 17 Electrical Characteristics

Figure 17.1 System Clock Input Timing 233
Figure 17.2 $\overline{\text{RES}}$ Low Width Timing 233
Figure 17.3 Input Timing 233
Figure 17.4 SCK3 Input Clock Timing 234
Figure 17.5 SCI3 Input/Output Timing in Clocked Synchronous Mode 234
Figure 17.6 Output Load Circuit 235

Appendix B I/O Port Block Diagrams

Figure B.1 Port 1 Block Diagram (P17) 267
Figure B.2 Port 1 Block Diagram (P14) 268
Figure B.3 Port 1 Block Diagram (P16, P15, P12, P10) 269
Figure B.4 Port 1 Block Diagram (P11) 270
Figure B.5 Port 2 Block Diagram (P22) 271
Figure B.6 Port 2 Block Diagram (P21) 272
Figure B.7 Port 2 Block Diagram (P20) 273
Figure B.8 Port 5 Block Diagram (P57, P56) 274
Figure B.9 Port 5 Block Diagram (P55) 275
Figure B.10 Port 5 Block Diagram (P54 to P50) 276
Figure B.11 Port 7 Block Diagram (P76) 277
Figure B.12 Port 7 Block Diagram (P75) 278
Figure B.13 Port 7 Block Diagram (P74) 279
Figure B.14 Port 8 Block Diagram (P84 to P81) 280
Figure B.15 Port 8 Block Diagram (P80) 281
Figure B.16 Port B Block Diagram (PB3 to PB0) 282

Appendix D Package Dimensions

Figure D.1 FP-64E Package Dimensions 284
Figure D.2 FP-48F Package Dimensions 285
Figure D.3 FP-48B Package Dimensions 286

Tables

Section 1 Overview
Table 1.1 Pin Functions 5
Table 2.1 Operation Notation 16

Section 2 CPU
Table 2.2 Data Transfer Instructions 17
Table 2.3 Arithmetic Operations Instructions (1) 18
Table 2.3 Arithmetic Operations Instructions (2) 19
Table 2.4 Logic Operations Instructions 20
Table 2.5 Shift Instructions 20
Table 2.6 Bit Manipulation Instructions (1) 21
Table 2.6 Bit Manipulation Instructions (2) 22
Table 2.7 Branch Instructions 23
Table 2.8 System Control Instructions 24
Table 2.9 Block Data Transfer Instructions 25
Table 2.10 Addressing Modes 27
Table 2.11 Absolute Address Access Ranges 28
Table 2.12 Effective Address Calculation (1) 30
Table 2.12 Effective Address Calculation (2) 31

Section 3 Exception Handling
Table 3.1 Exception Sources and Vector Address 42
Table 3.2 Interrupt Wait States 51

Section 4 Address Break
Table 4.1 Access and Data Bus Used 57

Section 5 Clock Pulse Generators
Table 5.1 Crystal Resonator Parameters 62

Section 6 Power-Down Modes
Table 6.1 Operating Frequency and Waiting Time 67
Table 6.2 Transition Mode after SLEEP Instruction Execution and Interrupt Handling 71
Table 6.3 Internal State in Each Operating Mode 71

Section 7 ROM
Table 7.1 Setting Programming Modes 79
Table 7.2 Boot Mode Operation 81
Table 7.3 System Clock Frequencies for which Automatic Adjustment of LSI Bit Rate is Possible 82
Table 7.4 Reprogram Data Computation Table 85
Table 7.5 Additional-Program Data Computation Table 85
Table 7.6 Programming Time 85

Section 10 Timer V

Table 10.1 Pin Configuration 112
Table 10.2 Clock Signals to Input to TCNTV and Counting Conditions 115

Section 11 Timer W

Table 11.1 Timer W Functions 126
Table 11.2 Pin Configuration 127

Section 13 Serial Communication Interface3 (SCI3)

Table 13.1 Pin Configuration 157
Table 13.2 Examples of BRR Settings for Various Bit Rates (Asynchronous Mode) (1) 165
Table 13.2 Examples of BRR Settings for Various Bit Rates (Asynchronous Mode) (2) 166
Table 13.2 Examples of BRR Settings for Various Bit Rates (Asynchronous Mode) (3) 167
Table 13.3 Maximum Bit Rate for Each Frequency (Asynchronous Mode) 167
Table 13.4 BRR Settings for Various Bit Rates (Clocked Synchronous Mode) 168
Table 13.5 SSR Status Flags and Receive Data Handling 174
Table 13.6 SCI3 Interrupt Requests 191

Section 14 A/D Converter

Table 14.1 Pin Configuration 197
Table 14.2 Analog Input Channels and Corresponding ADDR Registers 198
Table 14.3 A/D Conversion Time (Single Mode) 203

Section 17 Electrical Characteristics

Table 17.1 Absolute Maximum Ratings 219
Table 17.2 DC Characteristics (1) 221
Table 17.2 DC Characteristics (2) 225
Table 17.3 AC Characteristics 226
Table 17.4 Serial Interface (SCI3) Timing 228
Table 17.5 A/D Converter Characteristics 229
Table 17.6 Watchdog Timer Characteristics 230
Table 17.7 Flash Memory Characteristics (Preliminary) 231

Appendix A Instruction Set

Table A.1 Instruction Set 239
Table A.2 Operation Code Map (1) 252
Table A.2 Operation Code Map (2) 253
Table A.2 Operation Code Map (3) 254
Table A.3 Number of Cycles in Each Instruction 256
Table A.4 Number of Cycles in Each Instruction 257
Table A.5 Combinations of Instructions and Addressing Modes 266

Section 1 Overview

1.1 Features

- High-speed H8/300H central processing unit with an internal 16-bit architecture
  - Upward-compatible with H8/300 CPU on an object level
  - Sixteen 16-bit general registers
  - 62 basic instructions
- Various peripheral functions
  - Timer V (8-bit timer)
  - Timer W (16-bit timer)
  - Watchdog timer
  - SCI3 (Asynchronous or clocked synchronous serial communication interface)
  - 10-bit A/D converter
- On-chip memory

Product Classification		Model	ROM	RAM
Flash memory version	H8/3672	HD64F3672	16 kbytes	2,048 bytes
(F-ZTAT™ version)	H8/3670	HD64F3670	8 kbytes	2,048 bytes

- General I/O ports
  - I/O pins: 26 I/O pins, including 5 large current ports (I_{OL} = 20 mA, @V_{OL} = 1.5 V)
  - Input-only pins: 4 input pins (also used for analog input)
- Supports various power-down modes
- Compact package

Package	Code	Body Size	Pin Pitch
LQFP-64	FP-64E	10.0 × 10.0 mm	0.5 mm
LQFP-48	FP-48F	10.0 × 10.0 mm	0.65 mm
LQFP-48	FP-48B	7.0 × 7.0 mm	0.5 mm

Note: F-ZTAT™ is a trademark of Hitachi, Ltd.

1.2 Internal Block Diagram

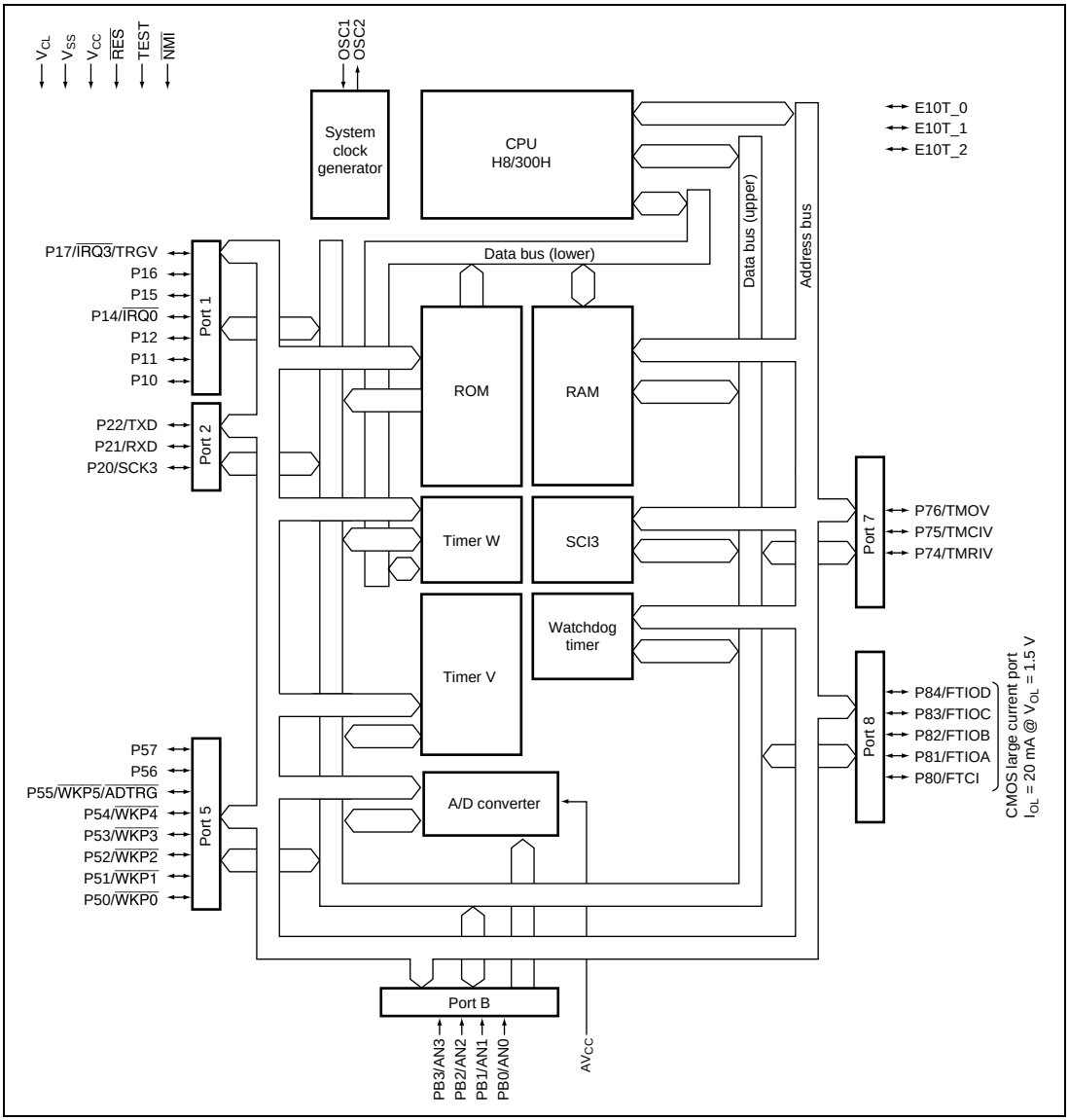

Figure 1.1 Internal Block Diagram

1.3 Pin Arrangement

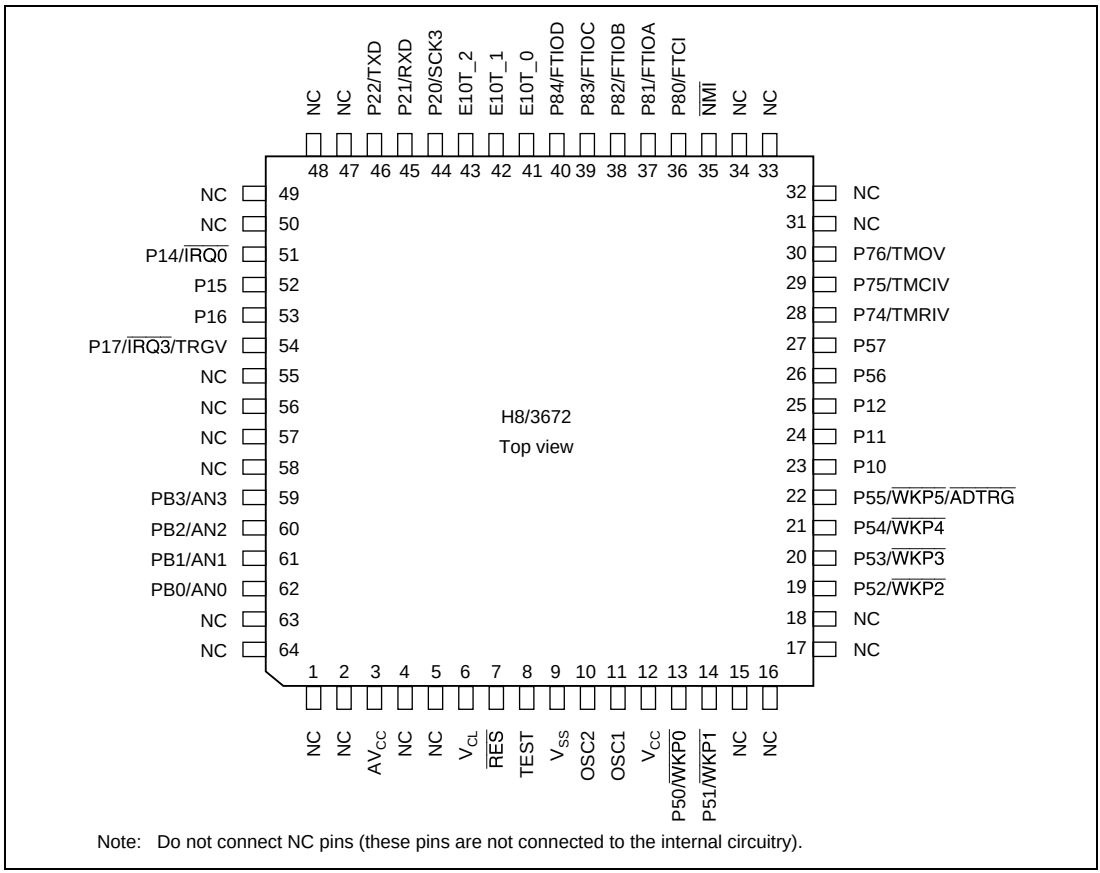

Note: Do not connect NC pins (these pins are not connected to the internal circuitry).

Figure 1.2 Pin Arrangement (FP-64E)

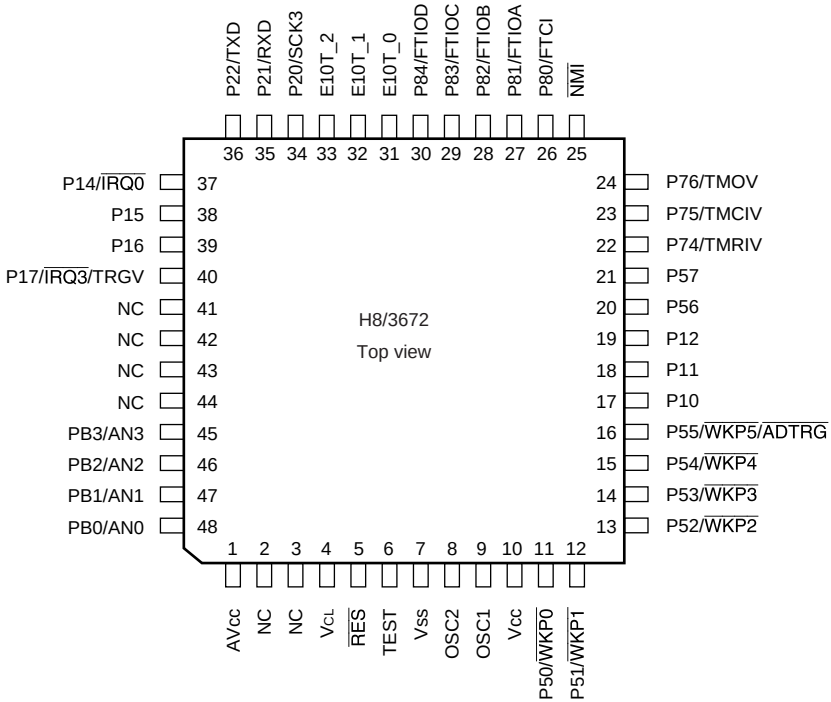

Note: Do not connect NC pins (these pins are not connected to the internal circuitry).

Figure 1.3 Pin Arrangement (FP-48F, FP-48B)

1.4 Pin Functions

Table 1.1 Pin Functions

Type	Symbol	Pin No. FP-64E	Pin No. FP-48F, FP-48B	I/O	Functions
Power source pins	V_{CC}	12	10	Input	Power supply pin. Connect this pin to the system power supply.
	V_{SS}	9	7	Input	Ground pin. Connect this pin to the system power supply (0V).
	AV_{CC}	3	1	Input	Analog power supply pin for the A/D converter. When the A/D converter is not used, connect this pin to the system power supply.
	V_{CL}	6	4	Input	Internal step-down power supply pin. Connect a capacitor of around 0.1 μF between this pin and the Vss pin for stabilization.
Clock pins	OSC1	11	9	Input	These pins connect to a crystal or ceramic resonator for system clocks, or can be used to input an external clock. See section 5, Clock Pulse Generators, for a typical connection.
	OSC2	10	8	Output	
System control	$\overline{RES}$	7	5	Input	Reset pin. When this driven low, the chip is reset.
	TEST	8	6	Input	Test pin. Connect this pin to Vss.
Interrupt pins	$\overline{NMI}$	35	25	Input	Non-maskable interrupt request input pin.
	$\overline{IRQ0}$, $\overline{IRQ3}$	51, 54	37, 40	Input	External interrupt request input pins. Can select the rising or falling edge.
	$\overline{WKP0}$ to $\overline{WKP5}$	13, 14, 19 to 22	11 to 16	Input	External interrupt request input pins. Can select the rising or falling edge.

Type	Symbol	Pin No. FP-64E	Pin No. FP-48F, FP-48B	I/O	Functions
Timer V	TMOV	30	24	Output	This is an output pin for waveforms generated by the output compare function.
	TMCIV	29	23	Input	External event input pin.
	TMRIV	28	22	Input	Counter reset input pin.
	TRGV	54	40	Input	Counter start trigger input pin.
Timer W	FTCI	36	26	Input	External event input pin.
	FTIOA to FTIOD	37 to 40	27 to 30	I/O	Output compare output/ input capture input/ PWM output pin
Serial communication interface (SCI)	TXD	46	36	Output	Transmit data output pin
	RXD	45	35	Input	Receive data input pin
	SCK3	44	34	I/O	Clock I/O pin
A/D converter	AN3 to AN0	59 to 62	45 to 48	Input	Analog input pin
	$\overline{\text{ADTRG}}$	22	16	Input	A/D converter trigger input pin.
I/O ports	PB3 to PB0	59 to 62	45 to 48	Input	4-bit input port.
	P17 to P14, P12 to P10	54 to 51, 25 to 23	40 to 37, 19 to 17	I/O	7-bit I/O port.
	P22 to P20	46 to 44	36 to 34	I/O	3-bit I/O port.
	P57 to P50	27, 26, 22 to 19, 14, 13	21, 20, 16 to 11	I/O	8-bit I/O port
	P76 to P74	30 to 28	24 to 22	I/O	3-bit I/O port
	P84 to P80	40 to 36	30 to 26	I/O	5-bit I/O port.
E10T	E10T_0, E10T_1, E10T_2	41, 42, 43	31, 32, 33		Interface pin for E10T emulator

Section 2 CPU

This LSI has an H8/300H CPU with an internal 32-bit architecture that is upward-compatible with the H8/300CPU, and supports only normal mode, which has a 64-kbyte address space.

- Upward-compatible with H8/300 CPUs
  - Can execute H8/300 CPUs object programs
  - Additional eight 16-bit extended registers
  - 32-bit transfer and arithmetic and logic instructions are added
  - Signed multiply and divide instructions are added.
- General-register architecture
  - Sixteen 16-bit general registers also usable as sixteen 8-bit registers or eight 32-bit registers
- Sixty-two basic instructions
  - 8/16/32-bit data transfer and arithmetic and logic instructions
  - Multiply and divide instructions
  - Powerful bit-manipulation instructions
- Eight addressing modes
  - Register direct [Rn]
  - Register indirect [@ERn]
  - Register indirect with displacement [@(d:16,ERn) or @(d:24,ERn)]
  - Register indirect with post-increment or pre-decrement [@ERn+ or @–ERn]
  - Absolute address [@aa:8, @aa:16, @aa:24]
  - Immediate [#xx:8, #xx:16, or #xx:32]
  - Program-counter relative [@(d:8,PC) or @(d:16,PC)]
  - Memory indirect [@@aa:8]
- 64-kbyte address space
- High-speed operation
  - All frequently-used instructions execute in one or two states
  - 8/16/32-bit register-register add/subtract : 2 state
  - 8 × 8-bit register-register multiply : 14 states
  - 16 ÷ 8-bit register-register divide : 14 states
  - 16 × 16-bit register-register multiply : 22 states
  - 32 ÷ 16-bit register-register divide : 22 states
- Power-down state
  - Transition to power-down state by SLEEP instruction

2.1 Address Space and Memory Map

The address space of this LSI is 64 kbytes, which includes the program area and the data area. Figure 2.1 shows the memory map.

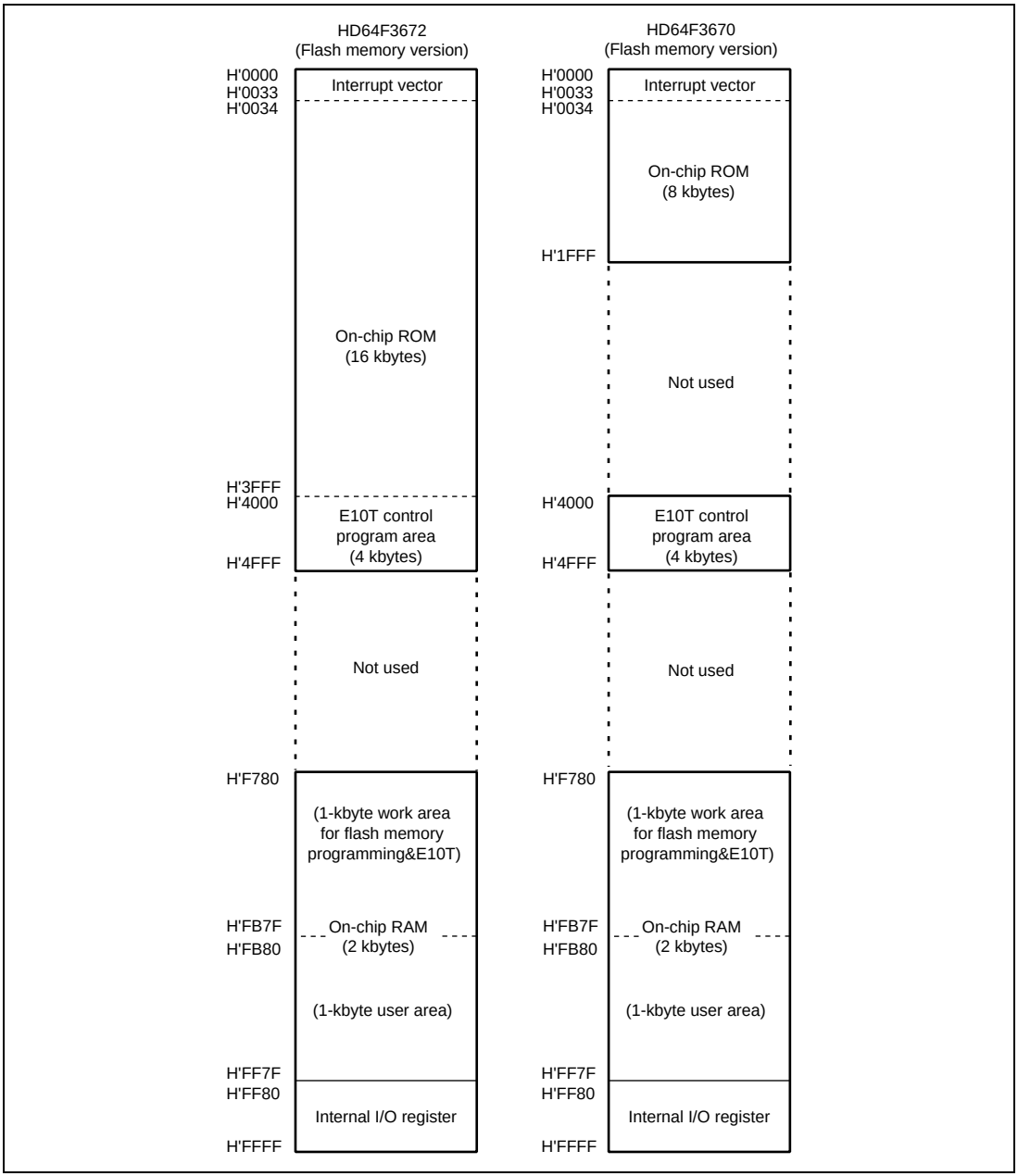

Figure 2.1 Memory Map

2.2 Register Configuration

The H8/300H CPU has the internal registers shown in figure 2.2. There are two types of registers; general registers and control registers. The control registers are a 24-bit program counter (PC), and an 8-bit condition code register (CCR).

General Registers (ERn)

	15 … 0	7 … 0	7 … 0
ER0	E0	R0H	R0L
ER1	E1	R1H	R1L
ER2	E2	R2H	R2L
ER3	E3	R3H	R3L
ER4	E4	R4H	R4L
ER5	E5	R5H	R5L
ER6	E6	R6H	R6L
ER7 (SP)	E7	R7H	R7L

Control Registers (CR)

23 … 0
PC

	7	6	5	4	3	2	1	0
CCR	I	UI	H	U	N	Z	V	C

Legend

SP	:Stack pointer	H	:Half-carry flag
PC	:Program counter	U	:User bit
CCR	:Condition-code register	N	:Negative flag
I	:Interrupt mask bit	Z	:Zero flag
UI	:User bit	V	:Overflow flag
		C	:Carry flag

Figure 2.2 CPU Registers

2.2.1 General Registers

The H8/300H CPU has eight 32-bit general registers. These general registers are all functionally identical and can be used as both address registers and data registers. When a general register is used as a data register, it can be accessed as a 32-bit, 16-bit, or 8-bit register. Figure 2.3 illustrates the usage of the general registers. When the general registers are used as 32-bit registers or address registers, they are designated by the letters ER (ER0 to ER7).

The ER registers divide into 16-bit general registers designated by the letters E (E0 to E7) and R (R0 to R7). These registers are functionally equivalent, providing a maximum of sixteen 16-bit registers. The E registers (E0 to E7) are also referred to as extended registers.

The R registers divide into 8-bit registers designated by the letters RH (R0H to R7H) and RL (R0L to R7L). These registers are functionally equivalent, providing a maximum of sixteen 8-bit registers.

The usage of each register can be selected independently.

General register ER7 has the function of stack pointer (SP) in addition to its general-register function, and is used implicitly in exception handling and subroutine calls. Figure 2.4 shows the stack.

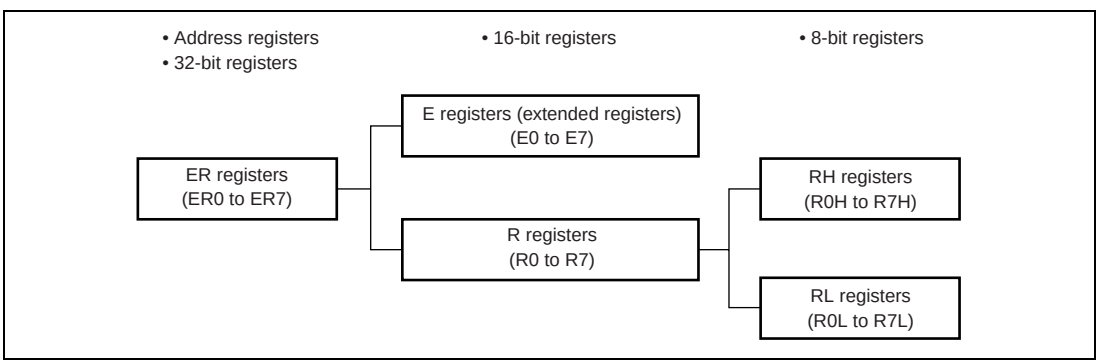

Figure 2.3 Usage of General Registers

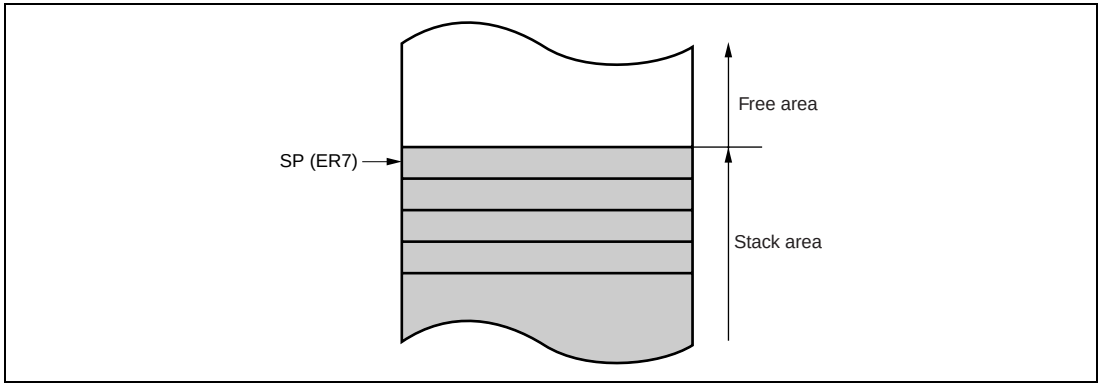

Figure 2.4 Relationship between Stack Pointer and Stack Area

2.2.2 Program Counter (PC)

This 24-bit counter indicates the address of the next instruction the CPU will execute. The length of all CPU instructions is 2 bytes (one word), so the least significant PC bit is ignored. (When an instruction is fetched, the least significant PC bit is regarded as 0). The PC is initialized when the start address is loaded by the vector address generated during reset exception-handling sequence.

2.2.3 Condition-Code Register (CCR)

This 8-bit register contains internal CPU status information, including an interrupt mask bit (I) and half-carry (H), negative (N), zero (Z), overflow (V), and carry (C) flags. The I bit is initialized to 1 by reset exception-handling sequence, but other bits are not initialized.

Some instructions leave flag bits unchanged. Operations can be performed on the CCR bits by the LDC, STC, ANDC, ORC, and XORC instructions. The N, Z, V, and C flags are used as branching conditions for conditional branch (Bcc) instructions.

For the action of each instruction on the flag bits, see appendix A.1, Instruction List.

Bit	Bit Name	Initial Value	R/W	Description
7	I	1	R/W	Interrupt Mask Bit Masks interrupts other than NMI when set to 1. NMI is accepted regardless of the I bit setting. The I bit is set to 1 at the start of an exception-handling sequence.
6	UI	undefined	R/W	User Bit Can be written and read by software using the LDC, STC, ANDC, ORC, and XORC instructions.
5	H	undefined	R/W	Half-Carry Flag When the ADD.B, ADDX.B, SUB.B, SUBX.B, CMP.B, or NEG.B instruction is executed, this flag is set to 1 if there is a carry or borrow at bit 3, and cleared to 0 otherwise. When the ADD.W, SUB.W, CMP.W, or NEG.W instruction is executed, the H flag is set to 1 if there is a carry or borrow at bit 11, and cleared to 0 otherwise. When the ADD.L, SUB.L, CMP.L, or NEG.L instruction is executed, the H flag is set to 1 if there is a carry or borrow at bit 27, and cleared to 0 otherwise.
4	U	undefined	R/W	User Bit Can be written and read by software using the LDC, STC, ANDC, ORC, and XORC instructions.
3	N	undefined	R/W	Negative Flag Stores the value of the most significant bit of data as a sign bit.
2	Z	undefined	R/W	Zero Flag Set to 1 to indicate zero data, and cleared to 0 to indicate non-zero data.
1	V	undefined	R/W	Overflow Flag Set to 1 when an arithmetic overflow occurs, and cleared to 0 at other times.
0	C	undefined	R/W	Carry Flag Set to 1 when a carry occurs, and cleared to 0 otherwise. Used by: • Add instructions, to indicate a carry • Subtract instructions, to indicate a borrow • Shift and rotate instructions, to indicate a carry The carry flag is also used as a bit accumulator by bit manipulation instructions.

2.3 Data Formats

The H8/300H CPU can process 1-bit, 4-bit (BCD), 8-bit (byte), 16-bit (word), and 32-bit (longword) data. Bit-manipulation instructions operate on 1-bit data by accessing bit n (n = 0, 1, 2, …, 7) of byte operand data. The DAA and DAS decimal-adjust instructions treat byte data as two digits of 4-bit BCD data.

2.3.1 General Register Data Formats

Figure 2.5 shows the data formats in general registers.

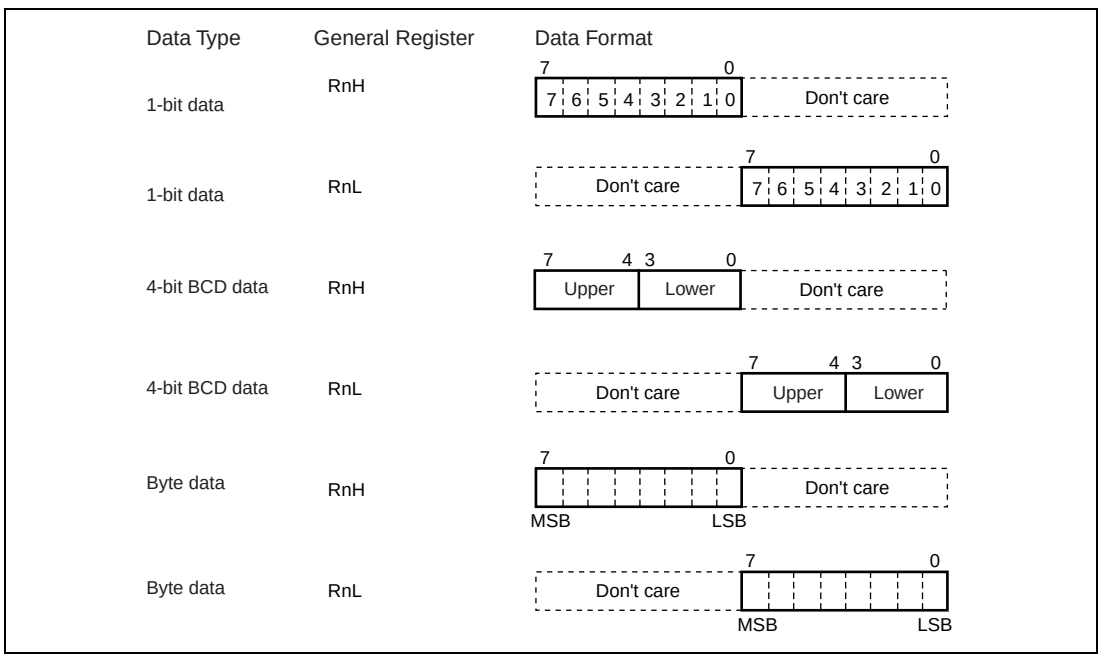

Figure 2.5 General Register Data Formats (1)

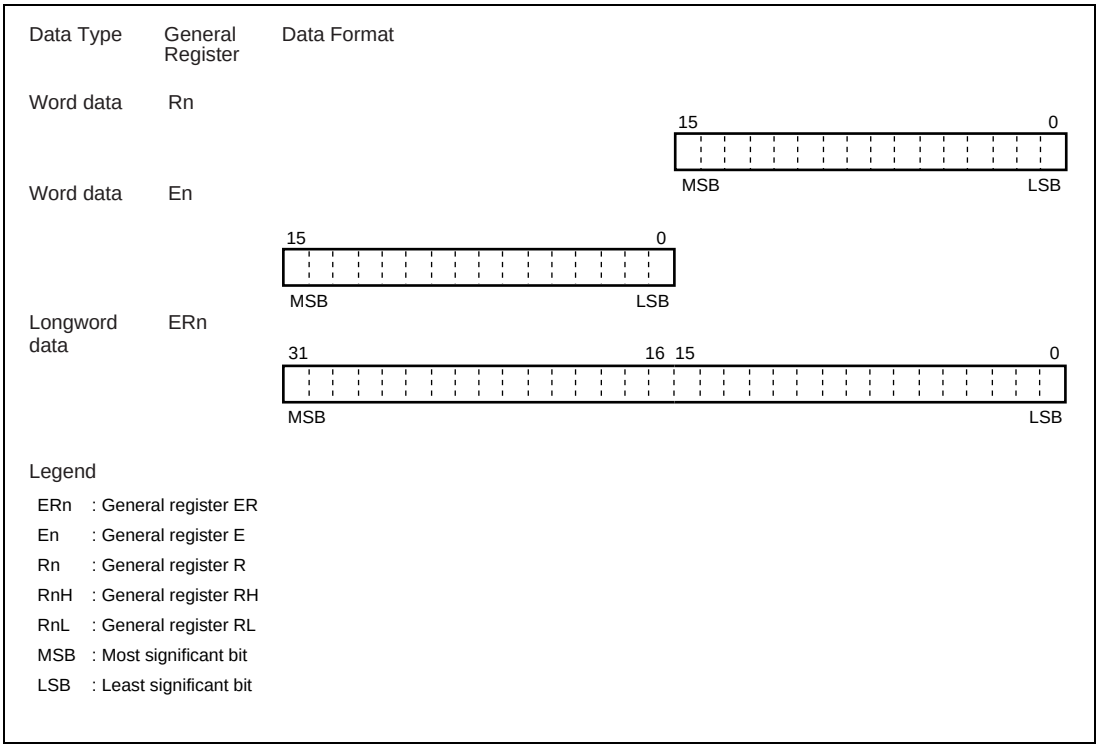

Figure 2.5 General Register Data Formats (2)

2.3.2 Memory Data Formats

Figure 2.6 shows the data formats in memory. The H8/300H CPU can access word data and longword data in memory, however word or longword data must begin at an even address. If an attempt is made to access word or longword data at an odd address, an address error does not occur, however the least significant bit of the address is regarded as 0, so access begins the preceding address. This also applies to instruction fetches.

When ER7 (SP) is used as an address register to access the stack, the operand size should be word or longword.

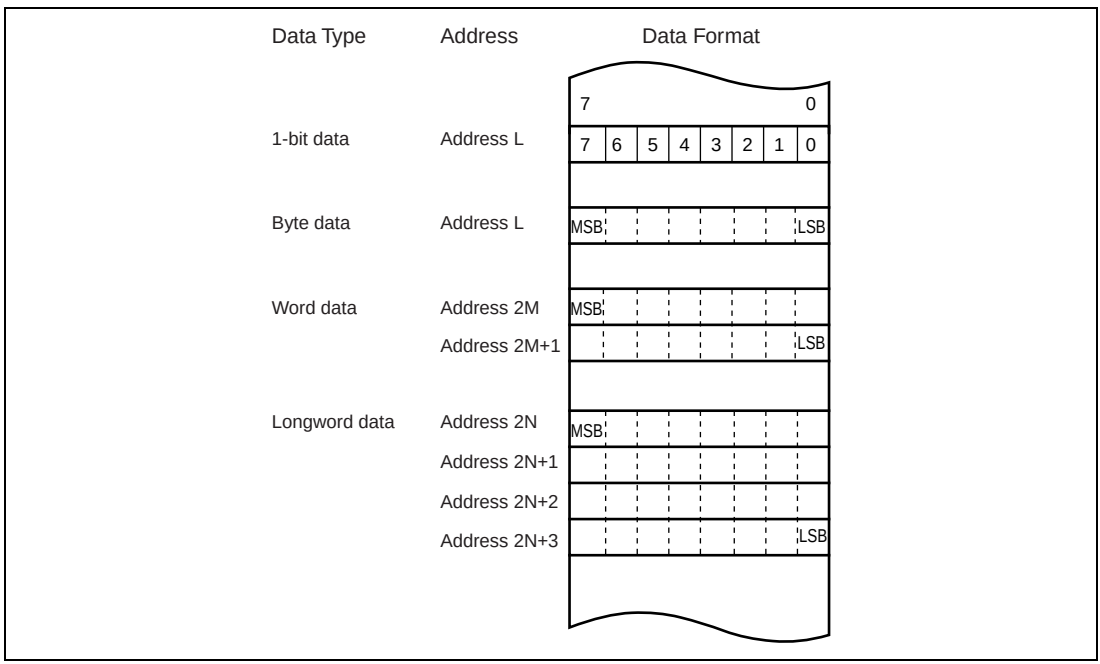

Figure 2.6 Memory Data Formats

2.4 Instruction Set

2.4.1 Table of Instructions Classified by Function

The H8/300H CPU has 62 instructions. Tables 2.2 to 2.9 summarize the instructions in each functional category. The notation used in tables 2.2 to 2.9 is defined below.

Table 2.1 Operation Notation

Symbol	Description
Rd	General register (destination)*
Rs	General register (source)*
Rn	General register*
ERn	General register (32-bit register or address register)
(EAd)	Destination operand
(EAs)	Source operand
CCR	Condition-code register
N	N (negative) flag in CCR
Z	Z (zero) flag in CCR
V	V (overflow) flag in CCR
C	C (carry) flag in CCR
PC	Program counter
SP	Stack pointer
#IMM	Immediate data
disp	Displacement
+	Addition
–	Subtraction
×	Multiplication
÷	Division
∧	Logical AND
∨	Logical OR
⊕	Logical XOR
→	Move
¬	NOT (logical complement)
:3/:8/:16/:24	3-, 8-, 16-, or 24-bit length

Note: * General registers include 8-bit registers (R0H to R7H, R0L to R7L), 16-bit registers (R0 to R7, E0 to E7), and 32-bit registers/address registers (ER0 to ER7).

Table 2.2 Data Transfer Instructions

Instruction	Size*	Function
MOV	B/W/L	(EAs) → Rd, Rs → (EAd) Moves data between two general registers or between a general register and memory, or moves immediate data to a general register.
MOVFPE	B	(EAs) → Rd, Cannot be used in this LSI.
MOVTPE	B	Rs → (EAs) Cannot be used in this LSI.
POP	W/L	@SP+ → Rn Pops a general register from the stack. POP.W Rn is identical to MOV.W @SP+, Rn. POP.L ERn is identical to MOV.L @SP+, ERn.
PUSH	W/L	Rn → @–SP Pushes a general register onto the stack. PUSH.W Rn is identical to MOV.W Rn, @–SP. PUSH.L ERn is identical to MOV.L ERn, @–SP.

Note: * Refers to the operand size.

B: Byte

W: Word

L: Longword

Table 2.3 Arithmetic Operations Instructions (1)

Instruction	Size*	Function
ADD SUB	B/W/L	Rd ± Rs → Rd, Rd ± #IMM → Rd Performs addition or subtraction on data in two general registers, or on immediate data and data in a general register (immediate byte data cannot be subtracted from byte data in a general register. Use the SUBX or ADD instruction.)
ADDX SUBX	B	Rd ± Rs ± C → Rd, Rd ± #IMM ± C → Rd Performs addition or subtraction with carry on byte data in two general registers, or on immediate data and data in a general register.
INC DEC	B/W/L	Rd ± 1 → Rd, Rd ± 2 → Rd Increments or decrements a general register by 1 or 2. (Byte operands can be incremented or decremented by 1 only.)
ADDS SUBS	L	Rd ± 1 → Rd, Rd ± 2 → Rd, Rd ± 4 → Rd Adds or subtracts the value 1, 2, or 4 to or from data in a 32-bit register.
DAA DAS	B	Rd decimal adjust → Rd Decimal-adjusts an addition or subtraction result in a general register by referring to the CCR to produce 4-bit BCD data.
MULXU	B/W	Rd × Rs → Rd Performs unsigned multiplication on data in two general registers: either 8 bits × 8 bits → 16 bits or 16 bits × 16 bits → 32 bits.
MULXS	B/W	Rd × Rs → Rd Performs signed multiplication on data in two general registers: either 8 bits × 8 bits → 16 bits or 16 bits × 16 bits → 32 bits.
DIVXU	B/W	Rd ÷ Rs → Rd Performs unsigned division on data in two general registers: either 16 bits ÷ 8 bits → 8-bit quotient and 8-bit remainder or 32 bits ÷ 16 bits → 16-bit quotient and 16-bit remainder.

Note: * Refers to the operand size.
B: Byte
W: Word
L: Longword

Table 2.3 Arithmetic Operations Instructions (2)

Instruction	Size*	Function
DIVXS	B/W	Rd ÷ Rs → Rd Performs signed division on data in two general registers: either 16 bits ÷ 8 bits → 8-bit quotient and 8-bit remainder or 32 bits ÷ 16 bits → 16-bit quotient and 16-bit remainder.
CMP	B/W/L	Rd – Rs, Rd – #IMM Compares data in a general register with data in another general register or with immediate data, and sets CCR bits according to the result.
NEG	B/W/L	0 – Rd → Rd Takes the two's complement (arithmetic complement) of data in a general register.
EXTU	W/L	Rd (zero extension) → Rd Extends the lower 8 bits of a 16-bit register to word size, or the lower 16 bits of a 32-bit register to longword size, by padding with zeros on the left.
EXTS	W/L	Rd (sign extension) → Rd Extends the lower 8 bits of a 16-bit register to word size, or the lower 16 bits of a 32-bit register to longword size, by extending the sign bit.

Note: * Refers to the operand size.
B: Byte
W: Word
L: Longword

Table 2.4 Logic Operations Instructions

Instruction	Size*	Function
AND	B/W/L	Rd ∧ Rs → Rd, Rd ∧ #IMM → Rd Performs a logical AND operation on a general register and another general register or immediate data.
OR	B/W/L	Rd ∨ Rs → Rd, Rd ∨ #IMM → Rd Performs a logical OR operation on a general register and another general register or immediate data.
XOR	B/W/L	Rd ⊕ Rs → Rd, Rd ⊕ #IMM → Rd Performs a logical exclusive OR operation on a general register and another general register or immediate data.
NOT	B/W/L	¬ (Rd) → (Rd) Takes the one's complement of general register contents.

Note: * Refers to the operand size.
B: Byte
W: Word
L: Longword

Table 2.5 Shift Instructions

Instruction	Size*	Function
SHAL SHAR	B/W/L	Rd (shift) → Rd Performs an arithmetic shift on general register contents.
SHLL SHLR	B/W/L	Rd (shift) → Rd Performs a logical shift on general register contents.
ROTL ROTR	B/W/L	Rd (rotate) → Rd Rotates general register contents.
ROTXL ROTXR	B/W/L	Rd (rotate) → Rd Rotates general register contents through the carry flag.

Note: * Refers to the operand size.
B: Byte
W: Word
L: Longword

Table 2.6 Bit Manipulation Instructions (1)

Instruction	Size*	Function
BSET	B	1 → (<bit-No.> of <EAd>) Sets a specified bit in a general register or memory operand to 1. The bit number is specified by 3-bit immediate data or the lower three bits of a general register.
BCLR	B	0 → (<bit-No.> of <EAd>) Clears a specified bit in a general register or memory operand to 0. The bit number is specified by 3-bit immediate data or the lower three bits of a general register.
BNOT	B	¬ (<bit-No.> of <EAd>) → (<bit-No.> of <EAd>) Inverts a specified bit in a general register or memory operand. The bit number is specified by 3-bit immediate data or the lower three bits of a general register.
BTST	B	¬ (<bit-No.> of <EAd>) → Z Tests a specified bit in a general register or memory operand and sets or clears the Z flag accordingly. The bit number is specified by 3-bit immediate data or the lower three bits of a general register.
BAND	B	C ∧ (<bit-No.> of <EAd>) → C ANDs the carry flag with a specified bit in a general register or memory operand and stores the result in the carry flag.
BIAND	B	C ∧ ¬ (<bit-No.> of <EAd>) → C ANDs the carry flag with the inverse of a specified bit in a general register or memory operand and stores the result in the carry flag. The bit number is specified by 3-bit immediate data.
BOR	B	C ∨ (<bit-No.> of <EAd>) → C ORs the carry flag with a specified bit in a general register or memory operand and stores the result in the carry flag.
BIOR	B	C ∨ ¬ (<bit-No.> of <EAd>) → C ORs the carry flag with the inverse of a specified bit in a general register or memory operand and stores the result in the carry flag. The bit number is specified by 3-bit immediate data.

Note: * Refers to the operand size.
B: Byte

Table 2.6 Bit Manipulation Instructions (2)

Instruction	Size*	Function
BXOR	B	C ⊕ (<bit-No.> of <EAd>) → C XORs the carry flag with a specified bit in a general register or memory operand and stores the result in the carry flag.
BIXOR	B	C ⊕ ¬ (<bit-No.> of <EAd>) → C XORs the carry flag with the inverse of a specified bit in a general register or memory operand and stores the result in the carry flag. The bit number is specified by 3-bit immediate data.
BLD	B	(<bit-No.> of <EAd>) → C Transfers a specified bit in a general register or memory operand to the carry flag.
BILD	B	¬ (<bit-No.> of <EAd>) → C Transfers the inverse of a specified bit in a general register or memory operand to the carry flag. The bit number is specified by 3-bit immediate data.
BST	B	C → (<bit-No.> of <EAd>) Transfers the carry flag value to a specified bit in a general register or memory operand.
BIST	B	¬ C → (<bit-No.> of <EAd>) Transfers the inverse of the carry flag value to a specified bit in a general register or memory operand. The bit number is specified by 3-bit immediate data.

Note: * Refers to the operand size.
B: Byte

Table 2.7 Branch Instructions

Instruction	Size	Function
Bcc*	—	Branches to a specified address if a specified condition is true. The branching conditions are listed below.

Mnemonic	Description	Condition
BRA(BT)	Always (true)	Always
BRN(BF)	Never (false)	Never
BHI	High	$C \vee Z = 0$
BLS	Low or same	$C \vee Z = 1$
BCC(BHS)	Carry clear (high or same)	$C = 0$
BCS(BLO)	Carry set (low)	$C = 1$
BNE	Not equal	$Z = 0$
BEQ	Equal	$Z = 1$
BVC	Overflow clear	$V = 0$
BVS	Overflow set	$V = 1$
BPL	Plus	$N = 0$
BMI	Minus	$N = 1$
BGE	Greater or equal	$N \oplus V = 0$
BLT	Less than	$N \oplus V = 1$
BGT	Greater than	$Z \vee (N \oplus V) = 0$
BLE	Less or equal	$Z \vee (N \oplus V) = 1$

JMP	—	Branches unconditionally to a specified address.
BSR	—	Branches to a subroutine at a specified address.
JSR	—	Branches to a subroutine at a specified address.
RTS	—	Returns from a subroutine

Note: * Bcc is the general name for conditional branch instructions.

Table 2.8 System Control Instructions

Instruction	Size*	Function
TRAPA	—	Starts trap-instruction exception handling.
RTE	—	Returns from an exception-handling routine.
SLEEP	—	Causes a transition to a power-down state.
LDC	B/W	(EAs) → CCR Moves the source operand contents to the CCR. The CCR size is one byte, but in transfer from memory, data is read by word access.
STC	B/W	CCR → (EAd), EXR → (EAd) Transfers the CCR contents to a destination location. The condition code register size is one byte, but in transfer to memory, data is written by word access.
ANDC	B	CCR ∧ #IMM → CCR, EXR ∧ #IMM → EXR Logically ANDs the CCR with immediate data.
ORC	B	CCR ∨ #IMM → CCR, EXR ∨ #IMM → EXR Logically ORs the CCR with immediate data.
XORC	B	CCR ⊕ #IMM → CCR, EXR ⊕ #IMM → EXR Logically XORs the CCR with immediate data.
NOP	—	PC + 2 → PC Only increments the program counter.

Note: * Refers to the operand size.
B: Byte
W: Word

Table 2.9 Block Data Transfer Instructions

Instruction	Size	Function
EEPMOV.B	—	if R4L ≠ 0 then Repeat @ER5+ → @ER6+, R4L–1 → R4L Until R4L = 0 else next;
EEPMOV.W	—	if R4 ≠ 0 then Repeat @ER5+ → @ER6+, R4–1 → R4 Until R4 = 0 else next; Transfers a data block. Starting from the address set in ER5, transfers data for the number of bytes set in R4L or R4 to the address location set in ER6. Execution of the next instruction begins as soon as the transfer is completed.

2.4.2 Basic Instruction Formats

H8/300H CPU instructions consist of 2-byte (1-word) units. An instruction consists of an operation field (op field), a register field (r field), an effective address extension (EA field), and a condition field (cc).

Figure 2.7 shows examples of instruction formats.

- Operation Field

  Indicates the function of the instruction, the addressing mode, and the operation to be carried out on the operand. The operation field always includes the first four bits of the instruction. Some instructions have two operation fields.

- Register Field

  Specifies a general register. Address registers are specified by 3 bits, and data registers by 3 bits or 4 bits. Some instructions have two register fields. Some have no register field.

- Effective Address Extension

  8, 16, or 32 bits specifying immediate data, an absolute address, or a displacement. A24-bit address or displacement is treated as a 32-bit data in which the first 8 bits are 0 (H'00).

- Condition Field

  Specifies the branching condition of Bcc instructions.

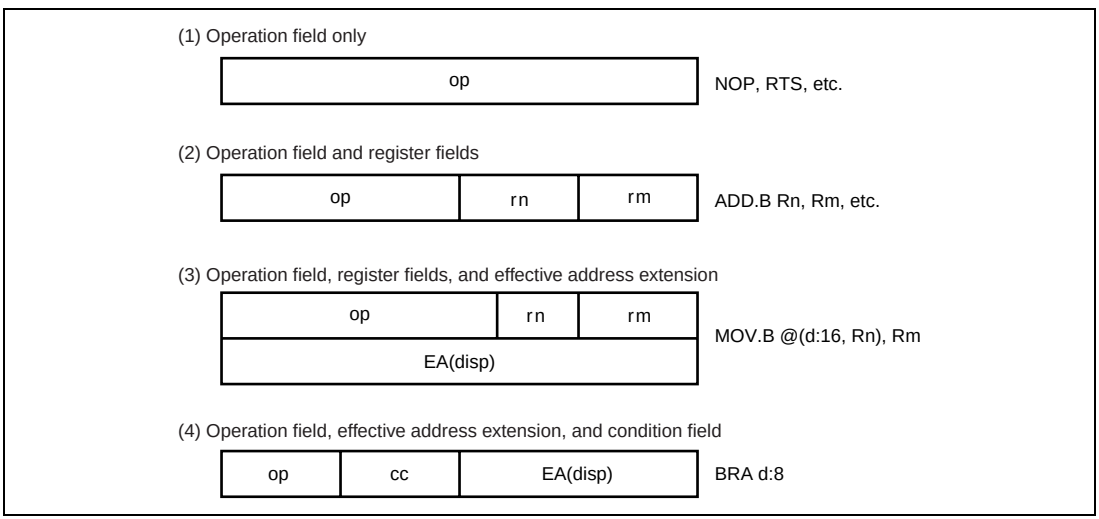

Figure 2.7 Instruction Formats

2.5 Addressing Modes and Effective Address Calculation

2.5.1 Addressing Modes

The following describes the H8/300H CPU. In this LSI, the upper eight bits are ignored in the generated 24-bit address, so the effective address is 16 bits.

The H8/300H CPU supports the eight addressing modes listed in table 2.10. Each instruction uses a subset of these addressing modes. Addressing modes that can be used differ depending on the instruction. For details, refer to appendix A.4, Combinations of Instructions and Addressing Modes.

Arithmetic and logic instructions can use the register direct and immediate modes. Data transfer instructions can use all addressing modes except program-counter relative and memory indirect. Bit manipulation instructions use register direct, register indirect, or the absolute addressing mode to specify an operand, and register direct (BSET, BCLR, BNOT, and BTST instructions) or immediate (3-bit) addressing mode to specify a bit number in the operand.

Table 2.10 Addressing Modes

No.	Addressing Mode	Symbol
1	Register direct	Rn
2	Register indirect	@ERn
3	Register indirect with displacement	@(d:16,ERn)/@(d:24,ERn)
4	Register indirect with post-increment Register indirect with pre-decrement	@ERn+ @–ERn
5	Absolute address	@aa:8/@aa:16/@aa:24
6	Immediate	#xx:8/#xx:16/#xx:32
7	Program-counter relative	@(d:8,PC)/@(d:16,PC)
8	Memory indirect	@@aa:8

Register Direct—Rn

The register field of the instruction specifies an 8-, 16-, or 32-bit general register containing the operand. R0H to R7H and R0L to R7L can be specified as 8-bit registers. R0 to R7 and E0 to E7 can be specified as 16-bit registers. ER0 to ER7 can be specified as 32-bit registers.

Register Indirect—@ERn

The register field of the instruction code specifies an address register (ERn), the lower 24 bits of which contain the address of the operand on memory.

Register Indirect with Displacement—@(d:16, ERn) or @(d:24, ERn)

A 16-bit or 24-bit displacement contained in the instruction is added to an address register (ERn) specified by the register field of the instruction, and the lower 24 bits of the sum the address of a memory operand. A 16-bit displacement is sign-extended when added.

Register Indirect with Post-Increment or Pre-Decrement—@ERn+ or @-ERn

- Register indirect with post-increment—@ERn+

  The register field of the instruction code specifies an address register (ERn) the lower 24 bits of which contains the address of a memory operand. After the operand is accessed, 1, 2, or 4 is added to the address register contents (32 bits) and the sum is stored in the address register. The value added is 1 for byte access, 2 for word access, or 4 for longword access. For the word or longword access, the register value should be even.
- Register indirect with pre-decrement—@-ERn

  The value 1, 2, or 4 is subtracted from an address register (ERn) specified by the register field in the instruction code, and the lower 24 bits of the result is the address of a memory operand. The result is also stored in the address register. The value subtracted is 1 for byte access, 2 for word access, or 4 for longword access. For the word or longword access, the register value should be even.

Absolute Address—@aa:8, @aa:16, @aa:24

The instruction code contains the absolute address of a memory operand. The absolute address may be 8 bits long (@aa:8), 16 bits long (@aa:16), 24 bits long (@aa:24)

For an 8-bit absolute address, the upper 16 bits are all assumed to be 1 (H'FFFF). For a 16-bit absolute address the upper 8 bits are a sign extension. A 24-bit absolute address can access the entire address space.

The access ranges of absolute addresses for the series of this LSI are those shown in table 2.11, because the upper 8 bits are ignored.

Table 2.11 Absolute Address Access Ranges

Absolute Address	Access Range
8 bits (@aa:8)	H'FF00 to H'FFFF
16 bits (@aa:16)	H'0000 to H'FFFF
24 bits (@aa:24)	H'0000 to H'FFFF

Immediate—#xx:8, #xx:16, or #xx:32

The instruction contains 8-bit (#xx:8), 16-bit (#xx:16), or 32-bit (#xx:32) immediate data as an operand.

The ADDS, SUBS, INC, and DEC instructions contain immediate data implicitly. Some bit manipulation instructions contain 3-bit immediate data in the instruction code, specifying a bit number. The TRAPA instruction contains 2-bit immediate data in its instruction code, specifying a vector address.

Program-Counter Relative—@(d:8, PC) or @(d:16, PC)

This mode is used in the BSR instruction. An 8-bit or 16-bit displacement contained in the instruction is sign-extended and added to the 24-bit PC contents to generate a branch address. The PC value to which the displacement is added is the address of the first byte of the next instruction, so the possible branching range is –126 to +128 bytes (–63 to +64 words) or –32766 to +32768 bytes (–16383 to +16384 words) from the branch instruction. The resulting value should be an even number.

Memory Indirect—@@aa:8

This mode can be used by the JMP and JSR instructions. The instruction code contains an 8-bit absolute address specifying a memory operand. This memory operand contains a branch address. The memory operand is accessed by longword access. The first byte of the memory operand is ignored, generating a 24-bit branch address. Figure 2.8 shows how to specify branch address for in memory indirect mode. The upper bits of the absolute address are all assumed to be 0, so the address range is 0 to 255 (H'0000 to H'00FF).

Note that the first part of the address range is also the exception vector area.

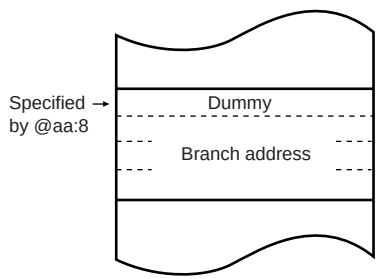

Figure 2.8 Branch Address Specification in Memory Indirect Mode

2.5.2 Effective Address Calculation

Table 2.12 indicates how effective addresses are calculated in each addressing mode. In this LSI the upper 8 bits of the effective address are ignored in order to generate a 16-bit effective address.

Table 2.12 Effective Address Calculation (1)

No	Addressing Mode and Instruction Format	Effective Address Calculation	Effective Address (EA)
1	Register direct(Rn) op | rm | rn		Operand is general register contents.
2	Register indirect(@ERn) op | r	31 … 0 General register contents	23 … 0
3	Register indirect with displacement @(d:16,ERn) or @(d:24,ERn) op | r | disp	31 … 0 General register contents 31 … 0 Sign extension | disp	23 … 0
4	Register indirect with post-increment or pre-decrement •Register indirect with post-increment @ERn+ op | r •Register indirect with pre-decrement @-ERn op | r	31 … 0 General register contents 1, 2, or 4 31 … 0 General register contents 1, 2, or 4 The value to be added or subtracted is 1 when the operand is byte size, 2 for word size, and 4 for longword size.	23 … 0 23 … 0

Table 2.12 Effective Address Calculation (2)

No	Addressing Mode and Instruction Format	Effective Address Calculation	Effective Address (EA)
5	Absolute address @aa:8 op | abs @aa:16 op | abs @aa:24 op abs		23 … 8 7 … 0: H'FFFF 23 … 16 15 … 0: Sign extension 23 … 0
6	Immediate #xx:8/#xx:16/#xx:32 op | IMM ^		Operand is immediate data.
7	Program-counter relative @(d:8,PC) @(d:16,PC) op | disp	23 … 0: PC contents 23 … 0: Sign extension | disp +	23 … 0
8	Memory indirect @@aa:8 op | abs	23 … 8 7 … 0: H'0000 | abs 15 … 0: Memory contents	23 … 16 15 … 0: H'00

Legend

r, rm,rn : Register field
op : Operation field
disp : Displacement
IMM : Immediate data
abs : Absolute address

2.6 Basic Bus Cycle

CPU operation is synchronized by a system clock (ø) or a subclock ($ø_{SUB}$). The period from a rising edge of ø or $ø_{SUB}$ to the next rising edge is called one state. A bus cycle consists of two states or three states. The cycle differs depending on whether access is to on-chip memory or to on-chip peripheral modules.

2.6.1 Access to On-Chip Memory (RAM, ROM)

Access to on-chip memory takes place in two states. The data bus width is 16 bits, allowing access in byte or word size. Figure 2.9 shows the on-chip memory access cycle.

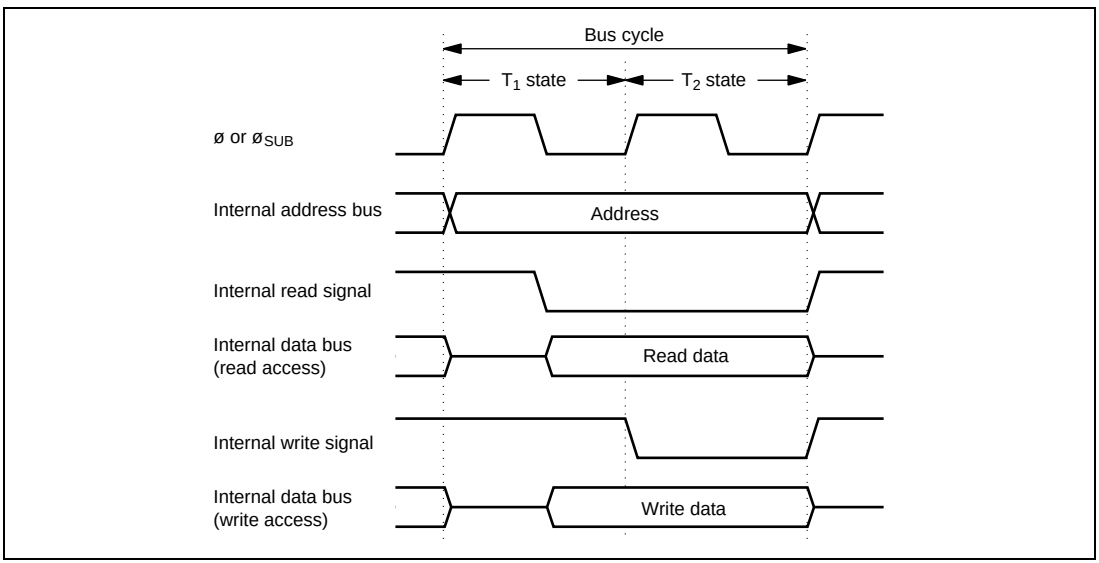

Figure 2.9 On-Chip Memory Access Cycle

2.6.2 On-Chip Peripheral Modules

On-chip peripheral modules are accessed in two states or three states. The data bus width is 8 bits or 16 bits depending on the register. For description on the data bus width and number of accessing states of each register, refer to section 16.1, Register Addresses. Registers with 16-bit data bus width can be accessed by word size only. Registers with 8-bit data bus width can be accessed by byte or word size. When a register with 8-bit data bus width is accessed by word size, access is completed in two cycles. In two-state access, the operation timing is the same as that for on-chip memory.

Figure 2.10 shows the operation timing in the case of three-state access to an on-chip peripheral module.

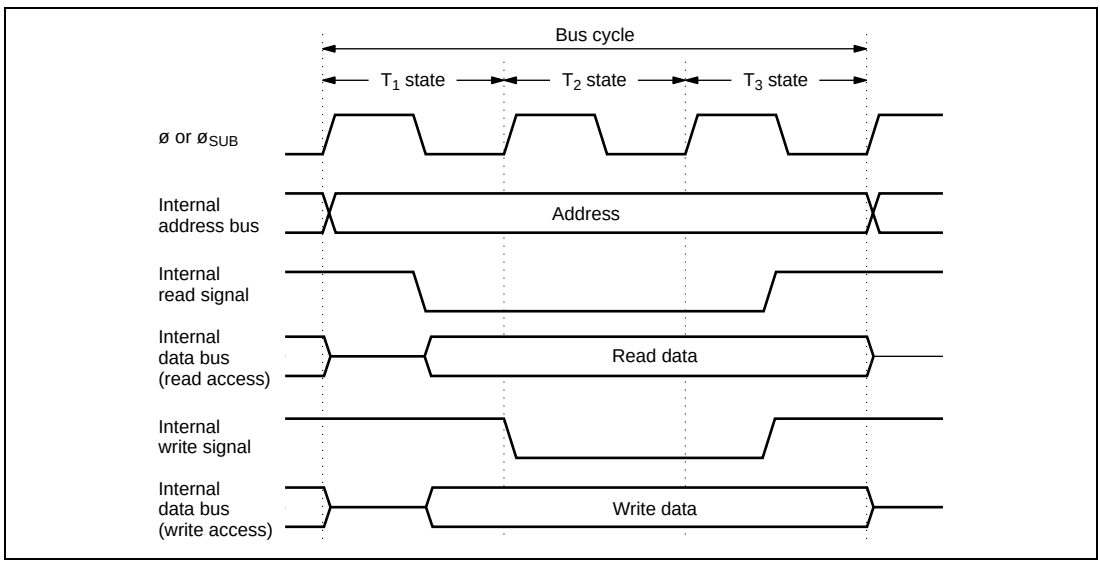

Figure 2.10 On-Chip Peripheral Module Access Cycle (3-State Access)

2.7 CPU States

There are four CPU states: the reset state, program execution state, program halt state, and exception-handling state. The program execution state includes active mode. In the program halt state there are a sleep mode, and standby mode. These states are shown in figure 2.11. Figure 2.12 shows the state transitions. For details on program execution state and program halt state, refer to section 6, Power-Down Modes. For details on exception processing, refer to section 3, Exception Handling.

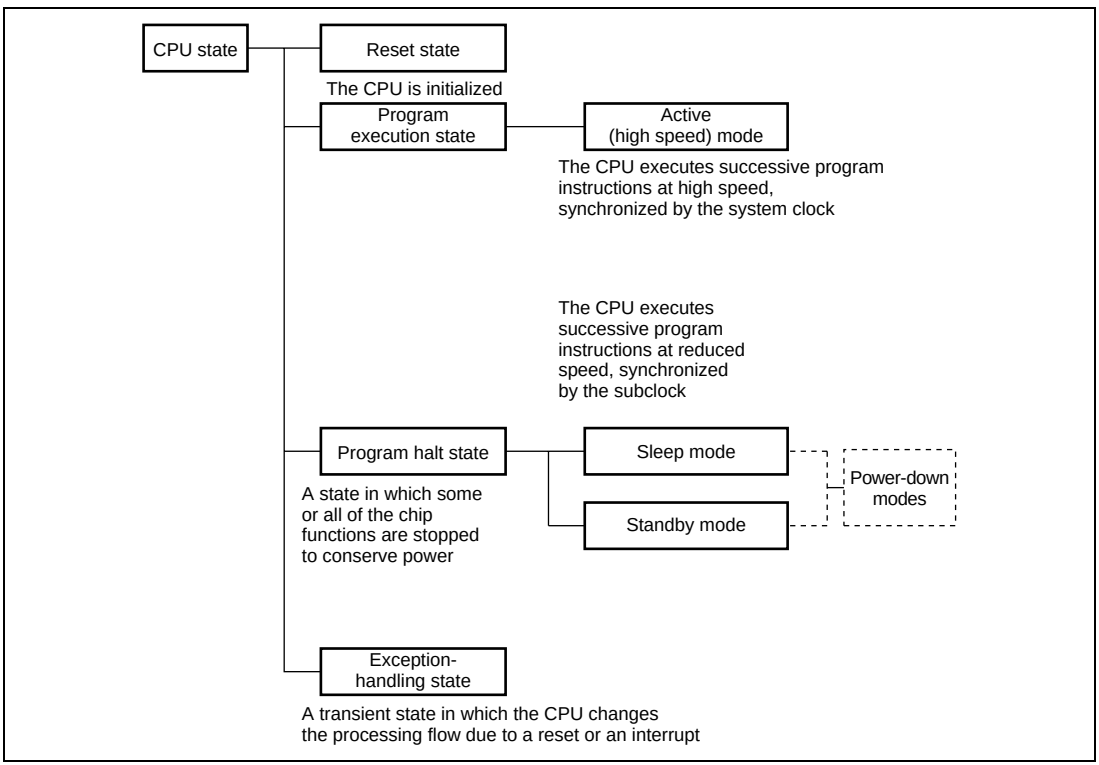

Figure 2.11 CPU Operation States

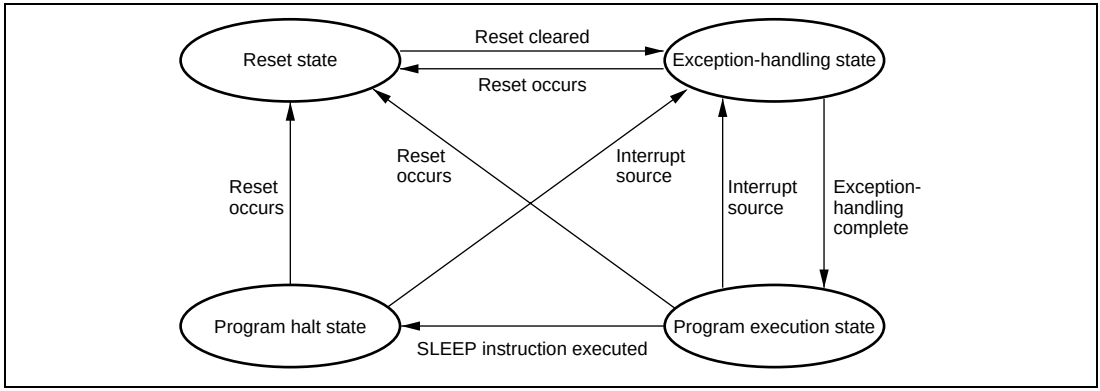

Figure 2.12 State Transitions

2.8 Usage Notes

2.8.1 Notes on Data Access to Empty Areas

The address space of this LSI includes empty areas in addition to the ROM, RAM, and on-chip I/O registers areas available to the user. When data is transferred from CPU to empty areas, the transferred data will be lost. This action may also cause the CPU to malfunction. When data is transferred from an empty area to CPU, the contents of the data cannot be guaranteed.

2.8.2 EEPMOV Instruction

EEPMOV is a block-transfer instruction and transfers the byte size of data indicated by R4L, which starts from the address indicated by R5, to the address indicated by R6. Set R4L and R6 so that the end address of the destination address (value of R6 + R4L) does not exceed H'FFFF (the value of R6 must not change from H'FFFF to H'0000 during execution).

2.8.3 Bit Manipulation Instruction

The BSET, BCLR, BNOT, BST, and BIST instructions read data from the specified address in byte units, manipulate the data of the target bit, and write data to the same address again in byte units. Special care is required when using these instructions in cases where two registers are assigned to the same address or when a bit is directly manipulated for a port, because this may rewrite data of a bit other than the bit to be manipulated.

Bit manipulation for two registers assigned to the same address

Example: Bit manipulation for the timer load register and timer counter

(Applicable for timer B and timer C, not for the series of this LSI.)

Figure 2.13 shows an example of a timer in which two timer registers are assigned to the same address. When a bit manipulation instruction accesses the timer load register and timer counter of a reloadable timer, since these two registers share the same address, the following operations takes place.

1. Data is read in byte units.
2. The CPU sets or resets the bit to be manipulated with the bit manipulation instruction.
3. The written data is written again in byte units to the timer load register.

The timer is counting, so the value read is not necessarily the same as the value in the timer load register. As a result, bits other than the intended bit in the timer counter may be modified and the modified value may be written to the timer load register.

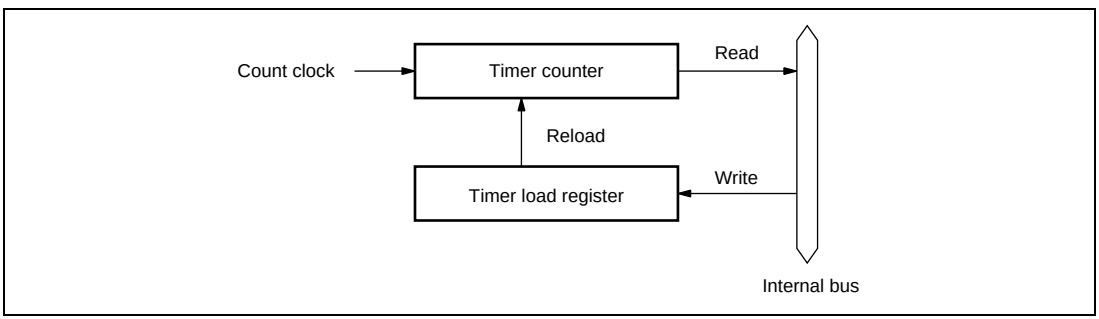

Figure 2.13 Example of Timer Configuration with Two Registers Allocated to Same Address

Example 2: The BSET instruction is executed for port 5.

P57 and P56 are input pins, with a low-level signal input at P57 and a high-level signal input at P56. P55 to P50 are output pins and output low-level signals. An example to output a high-level signal at P50 with a BSET instruction is shown below.

Prior to executing BSET

	P57	P56	P55	P54	P53	P52	P51	P50
Input/output	Input	Input	Output	Output	Output	Output	Output	Output
Pin state	Low level	High level	Low level	Low level	Low level	Low level	Low level	Low level
PCR5	0	0	1	1	1	1	1	1
PDR5	1	0	0	0	0	0	0	0

BSET instruction executed

```
BSET    #0,     @PDR5
```

The BSET instruction is executed for port 5.

After executing BSET

	P57	P56	P55	P54	P53	P52	P51	P50
Input/output	Input	Input	Output	Output	Output	Output	Output	Output
Pin state	Low level	High level	Low level	Low level	Low level	Low level	Low level	High level
PCR5	0	0	1	1	1	1	1	1
PDR5	0	1	0	0	0	0	0	1

Description on operation

When the BSET instruction is executed, first the CPU reads port 5.

Since P57 and P56 are input pins, the CPU reads the pin states (low-level and high-level input). P55 to P50 are output pins, so the CPU reads the value in PDR5. In this example PDR5 has a value of H'80, but the value read by the CPU is H'40.

Next, the CPU sets bit 0 of the read data to 1, changing the PDR5 data to H'41.

Finally, the CPU writes H'41 to PDR5, completing execution of BSET.

As a result of the BSET instruction, bit 0 in PDR5 becomes 1, and P50 outputs a high-level signal. However, bits 7 and 6 of PDR5 end up with different values. To prevent this problem, store a copy of the PDR5 data in a work area in memory. Perform the bit manipulation on the data in the work area, then write this data to PDR5.

Prior to executing BSET

```
MOV.B   #80,  R0L
MOV.B   R0L,  @RAM0
MOV.B   R0L,  @PDR5
```

The PDR5 value (H'80) is written to a work area in memory (RAM0) as well as to PDR5.

	P57	**P56**	**P55**	**P54**	**P53**	**P52**	**P51**	**P50**
Input/output	Input	Input	Output	Output	Output	Output	Output	Output
Pin state	Low level	High level	Low level	Low level	Low level	Low level	Low level	Low level
PCR5	0	0	1	1	1	1	1	1
PDR5	1	0	0	0	0	0	0	0
RAM0	1	0	0	0	0	0	0	0

BSET instruction executed

```
BSET    #0,    @RAM0
```

The BSET instruction is executed designating the PDR5 work area (RAM0).

After executing BSET

```
MOV.B   @RAM0, R0L
MOV.B   R0L,  @PDR5
```

The work area (RAM0) value is written to PDR5.

	P57	**P56**	**P55**	**P54**	**P53**	**P52**	**P51**	**P50**
Input/output	Input	Input	Output	Output	Output	Output	Output	Output
Pin state	Low level	High level	Low level	Low level	Low level	Low level	Low level	High level
PCR5	0	0	1	1	1	1	1	1
PDR5	1	0	0	0	0	0	0	1
RAM0	1	0	0	0	0	0	0	1

Bit Manipulation in a Register Containing a Write-Only Bit

Example 3: BCLR instruction executed designating port 5 control register PCR5

P57 and P56 are input pins, with a low-level signal input at P57 and a high-level signal input at P56. P55 to P50 are output pins that output low-level signals. An example of setting the P50 pin as an input pin by the BCLR instruction is shown below. It is assumed that a high-level signal will be input to this input pin.

Prior to executing BCLR

	P57	P56	P55	P54	P53	P52	P51	P50
Input/output	Input	Input	Output	Output	Output	Output	Output	Output
Pin state	Low level	High level	Low level	Low level	Low level	Low level	Low level	Low level
PCR5	0	0	1	1	1	1	1	1
PDR5	1	0	0	0	0	0	0	0

BCLR instruction executed

```
BCLR   #0,    @PCR5
```

The BCLR instruction is executed for PCR5.

After executing BCLR

	P57	P56	P55	P54	P53	P52	P51	P50
Input/output	Output	Output	Output	Output	Output	Output	Output	Input
Pin state	Low level	High level	Low level	Low level	Low level	Low level	Low level	High level
PCR5	1	1	1	1	1	1	1	0
PDR5	1	0	0	0	0	0	0	0

Description on operation

When the BCLR instruction is executed, first the CPU reads PCR5. Since PCR5 is a write-only register, the CPU reads a value of H'FF, even though the PCR5 value is actually H'3F.

Next, the CPU clears bit 0 in the read data to 0, changing the data to H'FE.

Finally, H'FE is written to PCR5 and BCLR instruction execution ends.

As a result of this operation, bit 0 in PCR5 becomes 0, making P50 an input port. However, bits 7 and 6 in PCR5 change to 1, so that P57 and P56 change from input pins to output pins. To prevent this problem, store a copy of the PCR5 data in a work area in memory and manipulate data of the bit in the work area, then write this data to PCR5.

Prior to executing BCLR

```
MOV.B   #3F,  R0L
MOV.B   R0L,  @RAM0
MOV.B   R0L,  @PCR5
```

The PCR5 value (H'3F) is written to a work area in memory (RAM0) as well as to PCR5.

	P57	**P56**	**P55**	**P54**	**P53**	**P52**	**P51**	**P50**
Input/output	Input	Input	Output	Output	Output	Output	Output	Output
Pin state	Low level	High level	Low level	Low level	Low level	Low level	Low level	Low level
PCR5	0	0	1	1	1	1	1	1
PDR5	1	0	0	0	0	0	0	0
RAM0	0	0	1	1	1	1	1	1

BCLR instruction executed

```
BCLR   #0,    @RAM0
```

The BCLR instructions executed for the PCR5 work area (RAM0).

After executing BCLR

```
MOV.B   @RAM0, R0L
MOV.B   R0L,  @PCR5
```

The work area (RAM0) value is written to PCR5.

	P57	**P56**	**P55**	**P54**	**P53**	**P52**	**P51**	**P50**
Input/output	Input	Input	Output	Output	Output	Output	Output	Output
Pin state	Low level	High level	Low level	Low level	Low level	Low level	Low level	High level
PCR5	0	0	1	1	1	1	1	0
PDR5	1	0	0	0	0	0	0	0
RAM0	0	0	1	1	1	1	1	0

Section 3 Exception Handling

Exception handling may be caused by a reset, a trap instruction (TRAPA), or interrupts.

- Reset

A reset has the highest exception priority. Exception handling starts as soon as the reset is cleared by the $\overline{\text{RES}}$ pin. The chip is also reset when the watchdog timer overflows, and exception handling starts. Exception handling is the same as exception handling by the $\overline{\text{RES}}$ pin.

- Trap Instruction

Exception handling starts when a trap instruction (TRAPA) is executed. The TRAPA instruction generates a vector address corresponding to a vector number from 0 to 3, as specified in the instruction code. Exception handling can be executed at all times in the program execution state.

- Interrupts

External interrupts other than NMI and internal interrupts other than address break are masked by the I bit in CCR, and kept masked while the I bit is set to 1. Exception handling starts when the current instruction or exception handling ends, if an interrupt request has been issued.

3.1 Exception Sources and Vector Address

Table 3.1 shows the vector addresses and priority of each exception handling. When more than one interrupt is requested, handling is performed from the interrupt with the highest priority.

Table 3.1 Exception Sources and Vector Address

Relative Module	Exception Sources	Vector Number	Vector Address	Priority
$\overline{\text{RES}}$ pin Watchdog timer	Reset	0	H'0000 to H'0001	High
—	Reserved for system use	1 to 6	H'0002 to H'000D	↑
External interrupt pin	NMI	7	H'000E to H'000F	
CPU	Trap instruction (#0)	8	H'0010 to H'0011	
	(#1)	9	H'0012 to H'0013	
	(#2)	10	H'0014 to H'0015	
	(#3)	11	H'0016 to H'0017	
Address break	Break conditions satisfied	12	H'0018 to H'0019	
CPU	Direct transition by executing the SLEEP instruction	13	H'001A to H'001B	
External interrupt pin	IRQ0	14	H'001C to H'001D	
	IRQ3	17	H'0022 to H'0023	
	WKP	18	H'0024 to H'0025	
—	Reserved for system use	20	H'0028 to H'0029	
Timer W	Input capture A/compare match A Input capture B/compare match B Input capture C/compare match C Input capture D/compare match D Timer W overflow	21	H'002A to H'002B	
Timer V	Timer V compare match A Timer V compare match B Timer V overflow	22	H'002C to H'002D	
SCI3	SCI3 receive data full SCI3 transmit data empty SCI3 transmit end SCI3 receive error	23	H'002E to H'002F	↓
A/D converter	A/D conversion end	25	H'0032 to H'0033	Low

3.2 Register Descriptions

Interrupts are controlled by the following registers.

- Interrupt edge select register 1 (IEGR1)
- Interrupt edge select register 2 (IEGR2)
- Interrupt enable register 1 (IENR1)
- Interrupt flag register 1 (IRR1)
- Wakeup interrupt flag register (IWPR)

3.2.1 Interrupt Edge Select Register 1 (IEGR1)

IEGR1 selects the direction of an edge that generates interrupt requests of pins and $\overline{\text{IRQ3}}$ and $\overline{\text{IRQ0}}$.

Bit	Bit Name	Initial Value	R/W	Description
7	—	0	–	Reserved This bit is always read as 0.
6	—	1	—	Reserved
5	—	1	—	These bits are always read as 1.
4	—	1	—	
3	IEG3	0	R/W	IRQ3 Edge Select 0: Falling edge of $\overline{\text{IRQ3}}$ pin input is detected 1: Rising edge of $\overline{\text{IRQ3}}$ pin input is detected
2	—	0	—	Reserved
1	—	0	—	These bits are always read as 0.
0	IEG0	0	R/W	IRQ0 Edge Select 0: Falling edge of $\overline{\text{IRQ0}}$ pin input is detected 1: Rising edge of $\overline{\text{IRQ0}}$ pin input is detected

3.2.2 Interrupt Edge Select Register 2 (IEGR2)

IEGR2 selects the direction of an edge that generates interrupt requests of the pins $\overline{\text{ADTRG}}$ and $\overline{\text{WKP5}}$ to $\overline{\text{WKP0}}$.

Bit	Bit Name	Initial Value	R/W	Description
7	—	1	—	Reserved
6	—	1	—	These bits are always read as 1.
5	WPEG5	0	R/W	WKP5 Edge Select 0: Falling edge of $\overline{\text{WKP5}}$ ($\overline{\text{ADTRG}}$) pin input is detected 1: Rising edge of $\overline{\text{WKP5}}$ ($\overline{\text{ADTRG}}$) pin input is detected
4	WPEG4	0	R/W	WKP4 Edge Select 0: Falling edge of $\overline{\text{WKP4}}$ pin input is detected 1: Rising edge of $\overline{\text{WKP4}}$ pin input is detected
3	WPEG3	0	R/W	WKP3 Edge Select 0: Falling edge of $\overline{\text{WKP3}}$ pin input is detected 1: Rising edge of $\overline{\text{WKP3}}$ pin input is detected
2	WPEG2	0	R/W	WKP2 Edge Select 0: Falling edge of $\overline{\text{WKP2}}$ pin input is detected 1: Rising edge of $\overline{\text{WKP2}}$ pin input is detected
1	WPEG1	0	R/W	WKP1Edge Select 0: Falling edge of $\overline{\text{WKP1}}$ pin input is detected 1: Rising edge of $\overline{\text{WKP1}}$ pin input is detected
0	WPEG0	0	R/W	WKP0 Edge Select 0: Falling edge of $\overline{\text{WKP0}}$ pin input is detected 1: Rising edge of $\overline{\text{WKP0}}$ pin input is detected

3.2.3 Interrupt Enable Register 1 (IENR1)

IENR1 enables direct transition interrupts, and external pin interrupts.

Bit	Bit Name	Initial Value	R/W	Description
7	IENDT	0	R/W	Direct Transfer Interrupt Enable When this bit is set to 1, direct transition interrupt requests are enabled.
6	—	0	—	Reserved This bit is always read as 0.
5	IENWP	0	R/W	Wakeup Interrupt Enable This bit is an enable bit, which is common to the pins $\overline{\text{WKP5}}$ to $\overline{\text{WKP0}}$. When the bit is set to 1, interrupt requests are enabled.
4	—	1	—	Reserved This bit is always read as 1.
3	IEN3	0	R/W	IRQ3 Interrupt Enable When this bit is set to 1, interrupt requests of the $\overline{\text{IRQ3}}$ pin are enabled.
2	—	0	—	Reserved
1	—	0	—	These bits are always read as 0.
0	IEN0	0	R/W	IRQ0 Interrupt Enable When this bit is set to 1, interrupt requests of the $\overline{\text{IRQ0}}$ pin are enabled.

When disabling interrupts by clearing bits in an interrupt enable register, or when clearing bits in an interrupt flag register, always do so while interrupts are masked (I = 1). If the above clear operations are performed while I = 0, and as a result a conflict arises between the clear instruction and an interrupt request, exception handling for the interrupt will be executed after the clear instruction has been executed.

3.2.4 Interrupt Flag Register 1 (IRR1)

IRR1 is a status flag register for direct transition interrupts, and $\overline{IRQ3}$ and $\overline{IRQ0}$ interrupt requests.

Bit	Bit Name	Initial Value	R/W	Description
7	IRRDT	0	R/W	Direct Transfer Interrupt Request Flag [Setting condition] When a direct transfer is made by executing a SLEEP instruction while DTON in SYSCR2 is set to 1. [Clearing condition] When IRRDT is cleared by writing 0
6	—	0	—	Reserved This bit is always read as 0.
5	—	1	—	Reserved
4	—	1	—	These bits are always read as 1.
3	IRRI3	0	R/W	IRQ3 Interrupt Request Flag [Setting condition] When $\overline{IRQ3}$ pin is designated for interrupt input and the designated signal edge is detected. [Clearing condition] When IRRI3 is cleared by writing 0
2	—	0	—	Reserved
1	—	0	—	These bits are always read as 0.
0	IRRI0	0	R/W	IRQ0 Interrupt Request Flag [Setting condition] When $\overline{IRQ0}$ pin is designated for interrupt input and the designated signal edge is detected. [Clearing condition] When IRRI0 is cleared by writing 0

3.2.5 Wakeup Interrupt Flag Register (IWPR)

IWPR is a status flag register for $\overline{\text{WKP5}}$ to $\overline{\text{WKP0}}$ interrupt requests.

Bit	Bit Name	Initial Value	R/W	Description
7	—	1	—	Reserved
6	—	1	—	These bits are always read as 1.
5	IWPF5	0	R/W	WKP5 Interrupt Request Flag [Setting condition] When $\overline{\text{WKP5}}$ pin is designated for interrupt input and the designated signal edge is detected. [Clearing condition] When IWPF5 is cleared by writing 0.
4	IWPF4	0	R/W	WKP4 Interrupt Request Flag [Setting condition] When $\overline{\text{WKP4}}$ pin is designated for interrupt input and the designated signal edge is detected. [Clearing condition] When IWPF4 is cleared by writing 0.
3	IWPF3	0	R/W	WKP3 Interrupt Request Flag [Setting condition] When $\overline{\text{WKP3}}$ pin is designated for interrupt input and the designated signal edge is detected. [Clearing condition] When IWPF3 is cleared by writing 0.
2	IWPF2	0	R/W	WKP2 Interrupt Request Flag [Setting condition] When $\overline{\text{WKP2}}$ pin is designated for interrupt input and the designated signal edge is detected. [Clearing condition] When IWPF2 is cleared by writing 0.
1	IWPF1	0	R/W	WKP1 Interrupt Request Flag [Setting condition] When $\overline{\text{WKP1}}$ pin is designated for interrupt input and the designated signal edge is detected. [Clearing condition] When IWPF1 is cleared by writing 0.
0	IWPF0	0	R/W	WKP0 Interrupt Request Flag [Setting condition] When $\overline{\text{WKP0}}$ pin is designated for interrupt input and the designated signal edge is detected. [Clearing condition] When IWPF0 is cleared by writing 0.

3.3 Reset Exception Handling

When the $\overline{\text{RES}}$ pin goes low, all processing halts and this LSI enters the reset. The internal state of the CPU and the registers of the on-chip peripheral modules are initialized by the reset. To ensure that this LSI is reset at power-up, hold the $\overline{\text{RES}}$ pin low until the clock pulse generator output stabilizes. To reset the chip during operation, hold the $\overline{\text{RES}}$ pin low for at least 10 system clock cycles. When the $\overline{\text{RES}}$ pin goes high after being held low for the necessary time, this LSI starts reset exception handling. The reset exception handling sequence is shown in figure 3.1. The reset exception handling sequence is as follows:

1. Set the I bit in the condition code register (CCR) to 1.
2. The CPU generates a reset exception handling vector address (from H'0000 to H'0001), the data in that address is sent to the program counter (PC) as the start address, and program execution starts from that address.

3.4 Interrupt Exception Handling

3.4.1 External Interrupts

There are external interrupts, NMI, IRQ3, IRQ0, and WKP.

NMI

NMI interrupt is requested by input falling edge to pin $\overline{\text{NMI}}$.

NMI is the highest interrupt, and can always be accepted without depending on the I bit value in CCR.

IRQ3 to IRQ0 Interrupts

IRQ3 to IRQ0 interrupts are requested by input signals to pins $\overline{\text{IRQ3}}$ to $\overline{\text{IRQ0}}$. These four interrupts are given different vector addresses, and are detected individually by either rising edge sensing or falling edge sensing, depending on the settings of bits IEG3 to IEG0 in IEGR1.

When pins $\overline{\text{IRQ3}}$ to $\overline{\text{IRQ0}}$ are designated for interrupt input in PMR1 and the designated signal edge is input, the corresponding bit in IRR1 is set to 1, requesting the CPU of an interrupt. When IRQ3 to IRQ0 interrupt is accepted, the I bit is set to 1 in CCR. These interrupts can be masked by setting bits IEN3 to IEN0 in IENR1.

WKP5 to WKP0 Interrupts

WKP5 to WKP0 interrupts are requested by input signals to pins $\overline{\text{WKP5}}$ to $\overline{\text{WKP0}}$. These six interrupts have the same vector addresses, and are detected individually by either rising edge sensing or falling edge sensing, depending on the settings of bits WPEG5 to WPEG0 in IEGR2.

When pins $\overline{\text{WKP5}}$ to $\overline{\text{WKP0}}$ are designated for interrupt input in PMR5 and the designated signal edge is input, the corresponding bit in IWPR is set to 1, requesting the CPU of an interrupt. These interrupts can be masked by setting bit IENWP in IENR1.

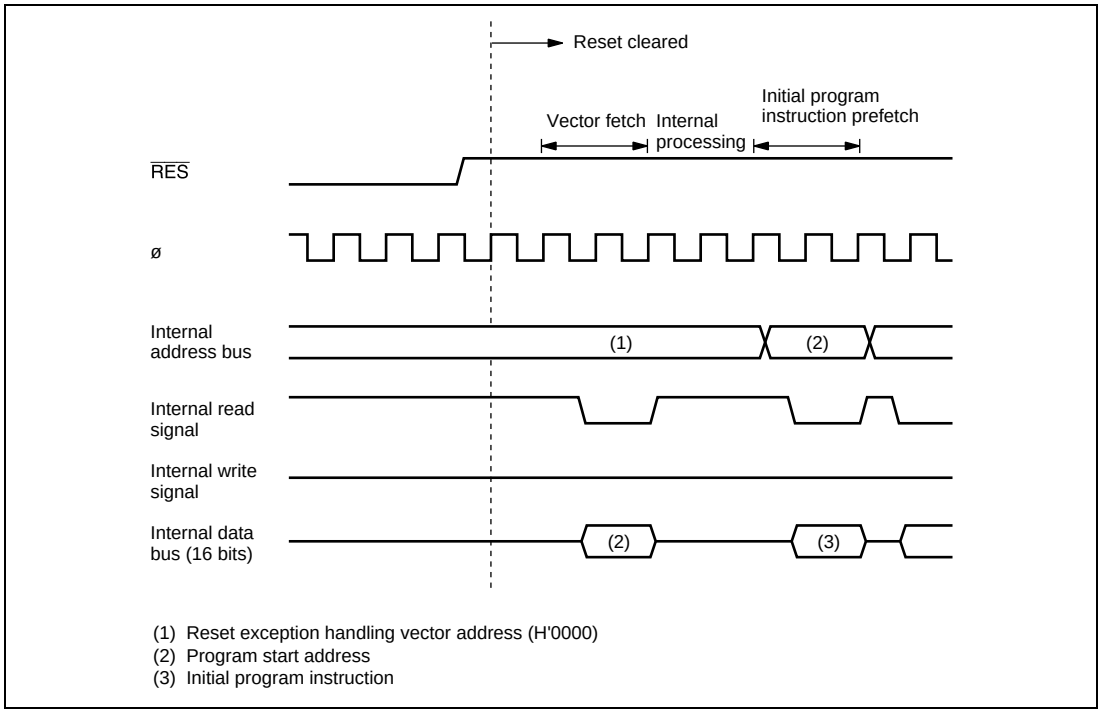

Figure 3.1 Reset Sequence

3.4.2 Internal Interrupts

Each on-chip peripheral module has a flag to show the interrupt request status and the enable bit to enable or disable the interrupt. For direct transfer interrupt requests generated by execution of a SLEEP instruction, this function is included in IRR1 and IENR1.

When an on-chip peripheral module requests an interrupt, the corresponding interrupt request status flag is set to 1, requesting the CPU of an interrupt. When this interrupt is accepted, the I bit is set to 1 in CCR. These interrupts can be masked by writing 0 to clear the corresponding enable bit.

3.4.3 Interrupt Handling Sequence

Interrupts are controlled by an interrupt controller.

Interrupt operation is described as follows.

1. If an interrupt occurs while the NMI or interrupt enable bit is set to 1, an interrupt request signal is sent to the interrupt controller.
2. When multiple interrupt requests are generated, the interrupt controller requests to the CPU for the interrupt handling with the highest priority at that time according to table 3.1. Other interrupt requests are held pending.
3. The CPU accepts the NMI or address break without depending on the I bit value. Other interrupt requests are accepted, if the I bit is cleared to 0 in CCR; if the I bit is set to 1, the interrupt request is held pending.
4. If the CPU accepts the interrupt after processing of the current instruction is completed, interrupt exception handling will begin. First, both PC and CCR are pushed onto the stack. The state of the stack at this time is shown in figure 3.2. The PC value pushed onto the stack is the address of the first instruction to be executed upon return from interrupt handling.
5. Then, the I bit of CCR is set to 1, masking further interrupts excluding the NMI and address break. Upon return from interrupt handling, the values of I bit and other bits in CCR will be restored and returned to the values prior to the start of interrupt exception handling.
6. Next, the CPU generates the vector address corresponding to the accepted interrupt, and transfers the address to PC as a start address of the interrupt handling-routine. Then a program starts executing from the address indicated in PC.

Figure 3.3 shows a typical interrupt sequence where the program area is in the on-chip ROM and the stack area is in the on-chip RAM.

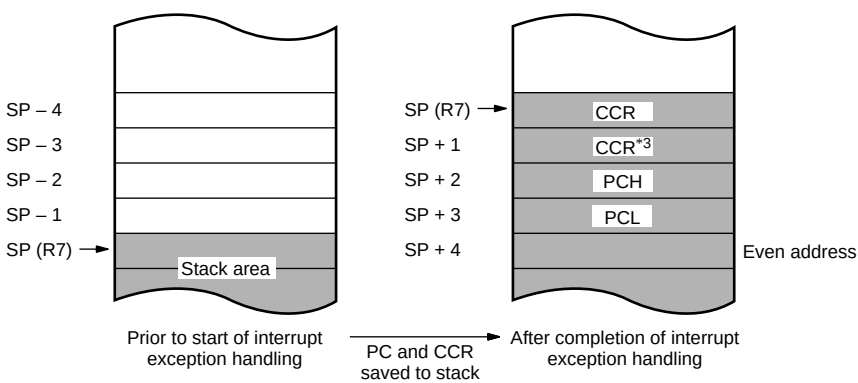

Legend:
PCH: Upper 8 bits of program counter (PC)
PCL: Lower 8 bits of program counter (PC)
CCR: Condition code register
SP: Stack pointer

Notes: 1. PC shows the address of the first instruction to be executed upon return from the interrupt handling routine.
2. Register contents must always be saved and restored by word length, starting from an even-numbered address.
3. Ignored when returning from the interrupt handling routine.

Figure 3.2 Stack Status after Exception Handling

3.4.4 Interrupt Response Time

Table 3.2 shows the number of wait states after an interrupt request flag is set until the first instruction of the interrupt handling-routine is executed.

Table 3.2 Interrupt Wait States

Item	States	Total
Waiting time for completion of executing instruction*	1 to 13	15 to 27
Saving of PC and CCR to stack	4	
Vector fetch	2	
Instruction fetch	4	
Internal processing	4	

Note: * Not including EEPMOV instruction.

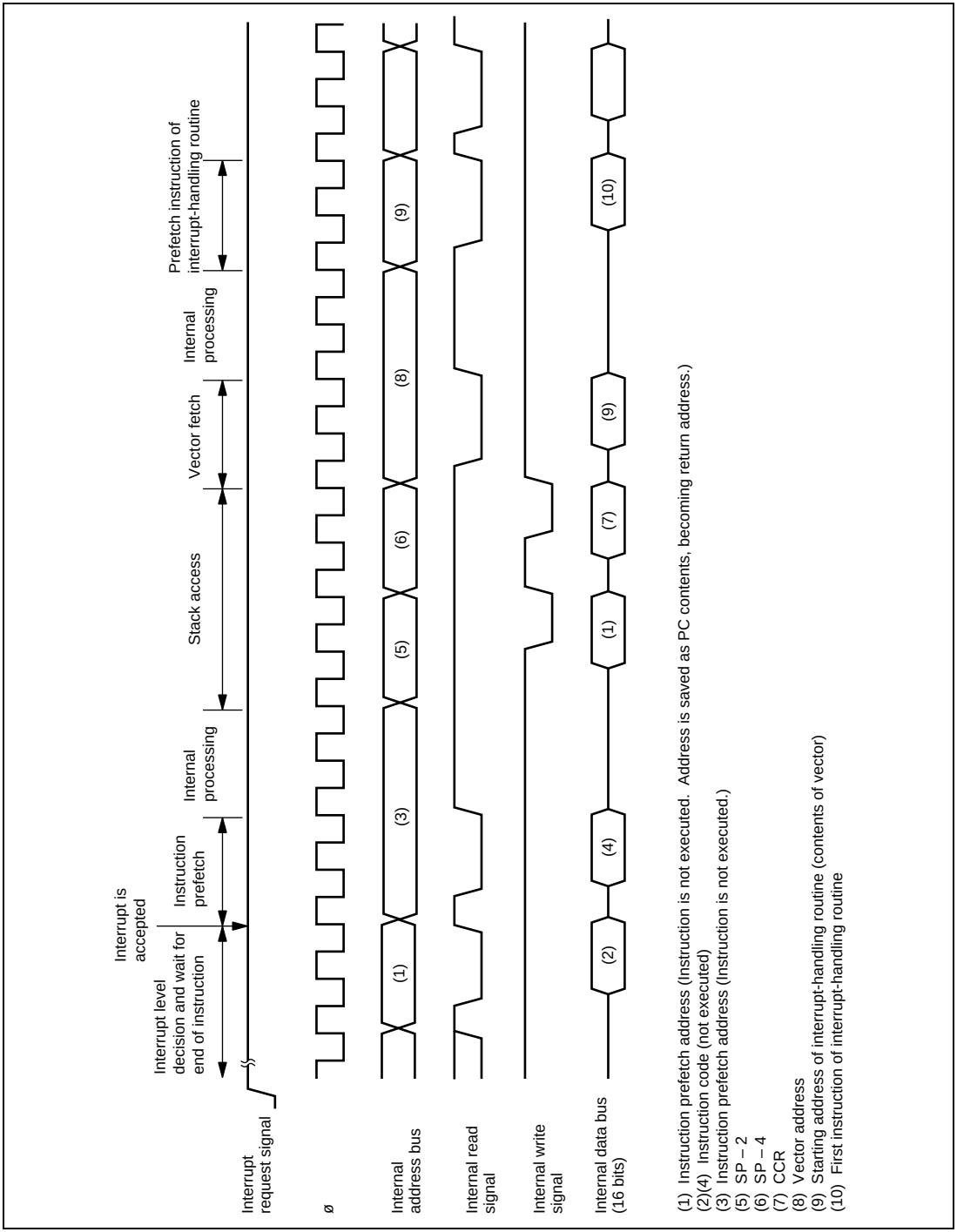

Figure 3.3 Interrupt Sequence

3.5 Usage Notes

3.5.1 Interrupts after Reset

If an interrupt is accepted after a reset and before the stack pointer (SP) is initialized, the PC and CCR will not be saved correctly, leading to a program crash. To prevent this, all interrupt requests, including NMI, are disabled immediately after a reset. Since the first instruction of a program is always executed immediately after the reset state ends, make sure that this instruction initializes the stack pointer (example: MOV.W #xx: 16, SP).

3.5.2 Notes on Stack Area Use

When word data is accessed, the least significant bit of the address is regarded as 0. Access to the stack always takes place in word size, so the stack pointer (SP: R7) should never indicate an odd address. Use PUSH Rn (MOV.W Rn, @–SP) or POP Rn (MOV.W @SP+, Rn) to save or restore register values.

3.5.3 Notes on Rewriting Port Mode Registers

When a port mode register is rewritten to switch the functions of external interrupt pins, $\overline{\text{IRQ3}}$ to $\overline{\text{IRQ0}}$, and $\overline{\text{WKP5}}$ to $\overline{\text{WKP0}}$, the interrupt request flag may be set to 1.

Figure 3.4 shows a port mode register setting and interrupt request flag clearing procedure.

When switching a pin function, mask the interrupt before setting the bit in the port mode register. After accessing the port mode register, execute at least one instruction (e.g., NOP), then clear the interrupt request flag from 1 to 0.

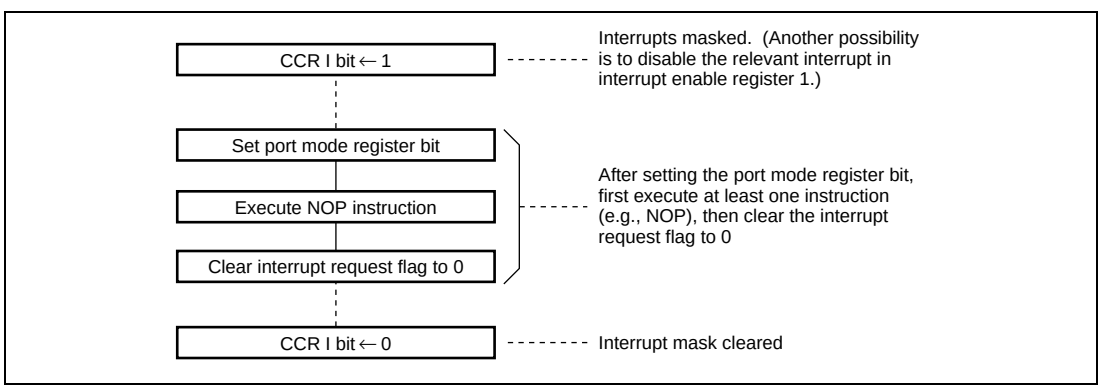

Figure 3.4 Port Mode Register Setting and Interrupt Request Flag Clearing Procedure

Section 4 Address Break

The address break simplifies on-board program debugging. It requests an address break interrupt when the set break condition is satisfied. The interrupt request is not affected by the I bit of CCR. Break conditions that can be set include instruction execution at a specific address and a combination of access and data at a specific address. With the address break function, the execution start point of a program containing a bug is detected and execution is branched to the correcting program. Figure 4.1 shows a block diagram of the address break.

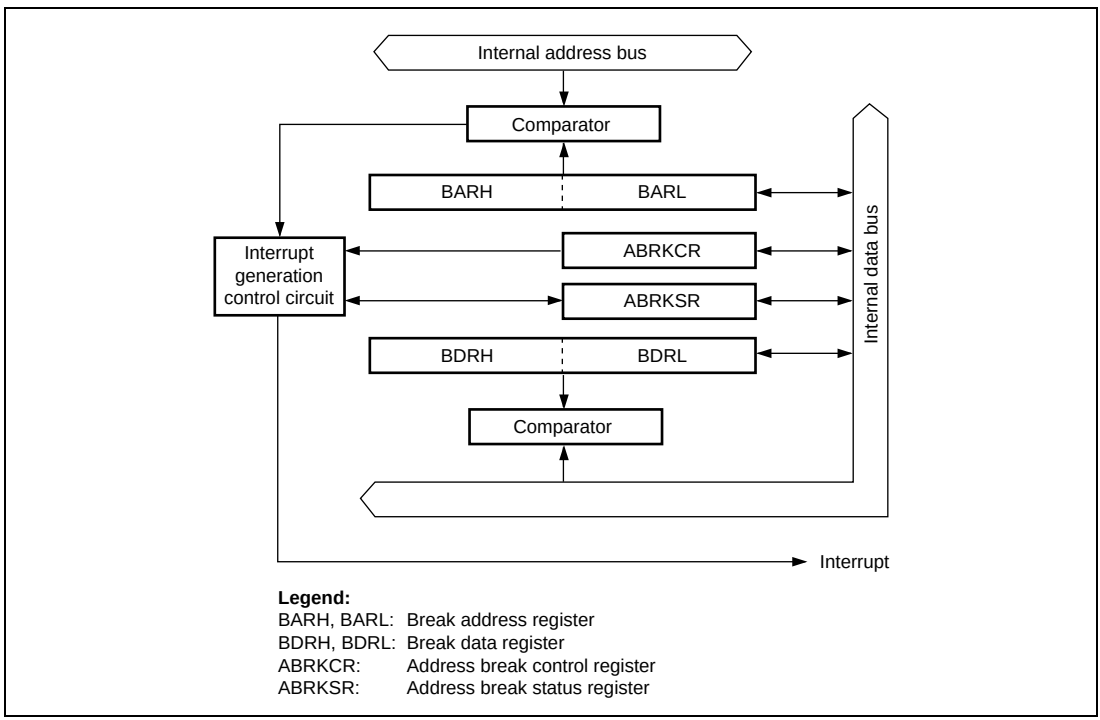

Figure 4.1 Block Diagram of Address Break

4.1 Register Descriptions

Address break has the following registers.

- Address break control register (ABRKCR)
- Address break status register (ABRKSR)
- Break address register (BARH, BARL)
- Break data register (BDRH, BDRL)

4.1.1 Address Break Control Register (ABRKCR)

ABRKCR sets address break conditions.

Bit	Bit Name	Initial Value	R/W	Description
7	RTINTE	1	R/W	RTE Interrupt Enable When this bit is 0, the interrupt immediately after executing RTE is masked and then one instruction must be executed. When this bit is 1, the interrupt is not masked.
6	CSEL1	0	R/W	Condition Select 1 and 0
5	CSEL0	0	R/W	These bits set address break conditions. 00: Instruction execution cycle 01: CPU data read cycle 10: CPU data write cycle 11: CPU data read/write cycle
4	ACMP2	0	R/W	Address Compare Condition Select 2 to 0
3	ACMP1	0	R/W	These bits comparison condition between the address set in BAR and the internal address bus.
2	ACMP0	0	R/W	000: Compares 16-bit addresses 001: Compares upper 12-bit addresses 010: Compares upper 8-bit addresses 011: Compares upper 4-bit addresses 1XX: Reserved (setting prohibited)
1	DCMP1	0	R/W	Data Compare Condition Select 1 and 0
0	DCMP0	0	R/W	These bits set the comparison condition between the data set in BDR and the internal data bus. 00: No data comparison 01: Compares lower 8-bit data between BDRL and data bus 10: Compares upper 8-bit data between BDRH and data bus 11: Compares 16-bit data between BDR and data bus

Legend: X: Don't care.

When an address break is set in the data read cycle or data write cycle, the data bus used will depend on the combination of the byte/word access and address. Table 4.1 shows the access and data bus used. When an I/O register space with an 8-bit data bus width is accessed in word size, a byte access is generated twice. For details on data widths of each register, see section 16.1, Register Addresses.

Table 4.1 Access and Data Bus Used

	Word Access		Byte Access	
	Even Address	**Odd Address**	**Even Address**	**Odd Address**
ROM space	Upper 8 bits	Lower 8 bits	Upper 8 bits	Upper 8 bits
RAM space	Upper 8 bits	Lower 8 bits	Upper 8 bits	Upper 8 bits
I/O register with 8-bit data bus width	Upper 8 bits	Upper 8 bits	Upper 8 bits	Upper 8 bits
I/O register with 16-bit data bus width	Upper 8 bits	Lower 8 bits	—	—

4.1.2 Address Break Status Register (ABRKSR)

ABRKSR consists of the address break interrupt flag and the address break interrupt enable bit.

Bit	Bit Name	Initial Value	R/W	Description
7	ABIF	0	R/W	Address Break Interrupt Flag [Setting condition] When the condition set in ABRKCR is satisfied [Clearing condition] When 0 is written after ABIF=1 is read
6	ABIE	0	R/W	Address Break Interrupt Enable When this bit is 1, an address break interrupt request is enabled.
5 to 0	—	All 1	—	Reserved These bits are always read as 1.

4.1.3 Break Address Registers (BARH, BARL)

BARH and BARL are 16-bit read/write registers that set the address for generating an address break interrupt. When setting the address break condition to the instruction execution cycle, set the first byte address of the instruction. The initial value of this register is H'FFFF.

4.1.4 Break Data Registers (BDRH, BDRL)

BDRH and BDRL are 16-bit read/write registers that set the data for generating an address break interrupt. BDRH is compared with the upper 8-bit data bus. BDRL is compared with the lower 8-bit data bus. When memory or registers are accessed by byte, the upper 8-bit data bus is used for even and odd addresses in the data transmission. Therefore, comparison data must be set in BDRH for byte access. For word access, the data bus used depends on the address. See section

4.1.1, Address Break Control Register (ABRKCR), for details. The initial value of this register is undefined.

4.2 Operation

When the ABIF and ABIE bits in ABRKSR are set to 1, the address break function generates an interrupt request to the CPU. The ABIF bit in ABRKSR is set to 1 by the combination of the address set in BAR, the data set in BDR, and the conditions set in ABRKCR. When the interrupt request is accepted, interrupt exception handling starts after the instruction being executed ends. The address break interrupt is not masked because of the I bit in CCR of the CPU.

Figures 4.2 show the operation examples of the address break interrupt setting.

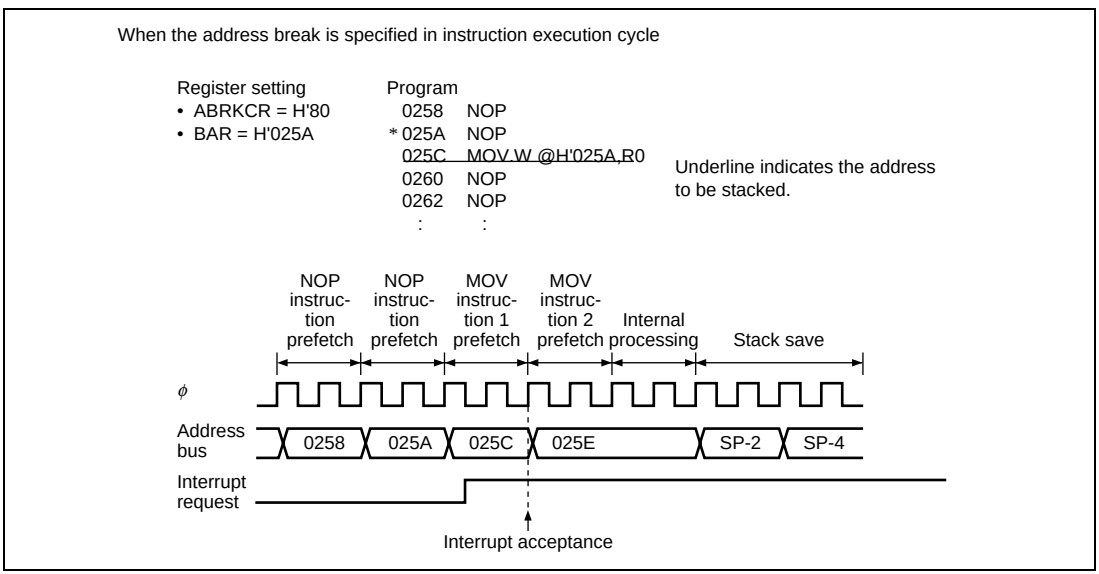

Figure 4.2 Address Break Interrupt Operation Example (1)

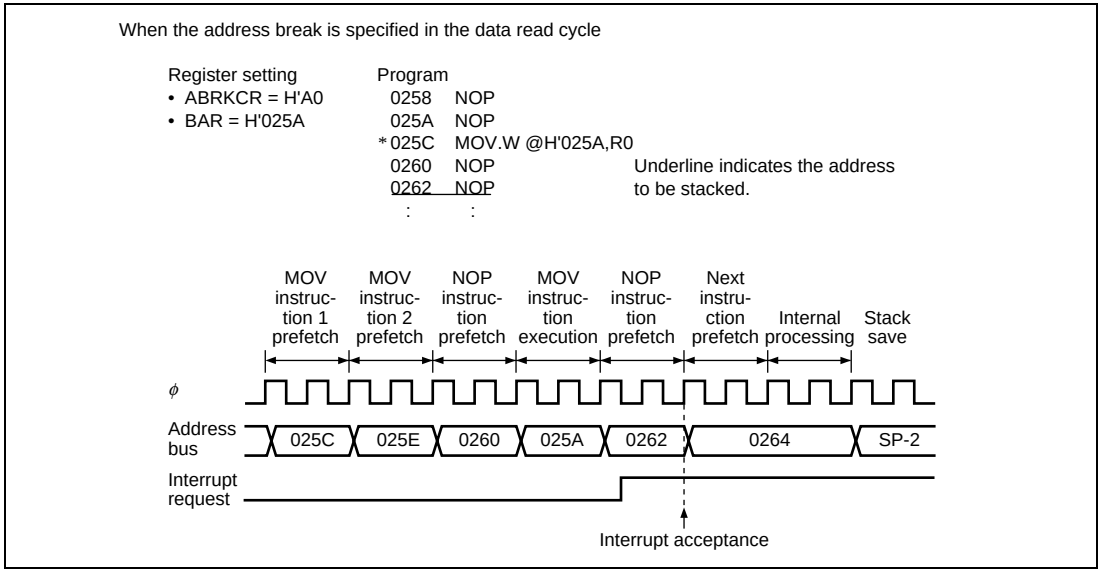

Figure 4.2 Address Break Interrupt Operation Example (2)

4.3 Usage Notes

When an address break is set to an instruction after a conditional branch instruction, and the instruction set when the condition of the branch instruction is not satisfied is executed (see figure 4.3), note that an address break interrupt request is not generated. Therefore an address break must not be set to the instruction after a conditional branch instruction.

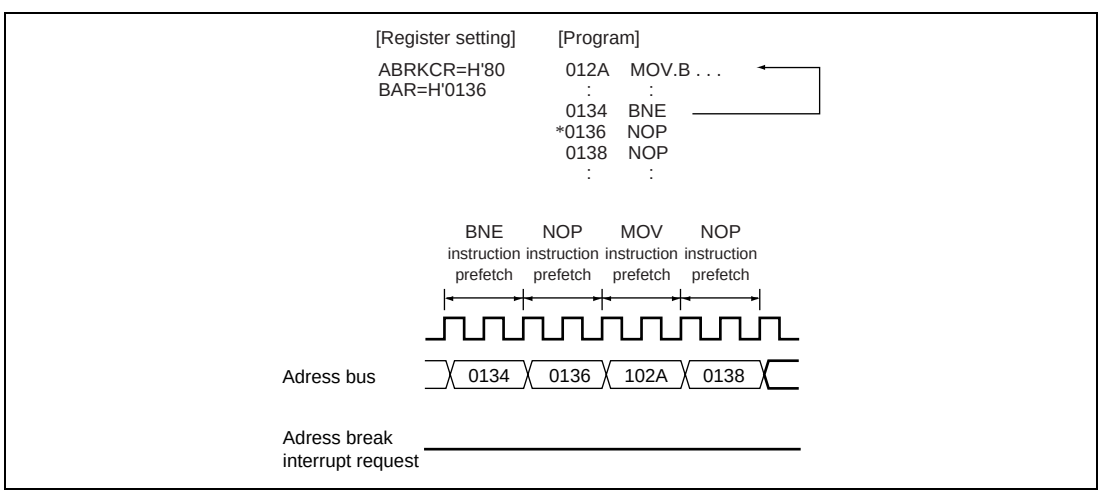

Figure 4.3 Operation when Condition is not Satisfied in Branch Instruction

When another interrupt request is accepted before an instruction to which an address break is set is executed, exception handling of an address break interrupt is not executed. However, the ABIF bit is set to 1 (see figure 4.4). Therefore the ABIF bit must be read during exception handling of an address break interrupt.

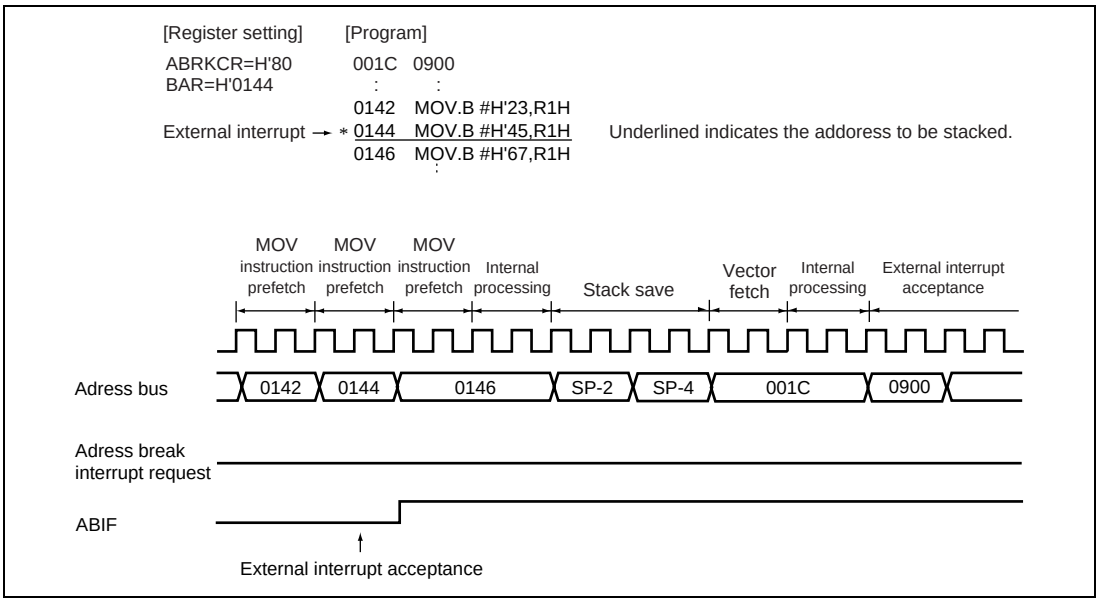

Figure 4.4 Operation when Another Interrupt is Accepted at Address Break Setting Instruction

Section 5 Clock Pulse Generators

Clock oscillator circuitry (CPG: clock pulse generator) is provided on-chip, including a system clock pulse generator. The system clock pulse generator consists of a system clock oscillator, a duty correction circuit, and system clock dividers.

Figure 5.1 shows a block diagram of the clock pulse generators.

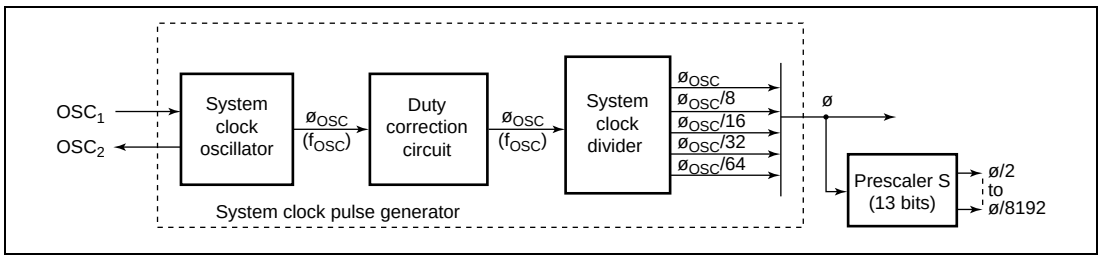

Figure 5.1 Block Diagram of Clock Pulse Generators

The basic clock signals that drive the CPU and on-chip peripheral modules are ø.

The system clock is divided into ø/8192 to ø/2 by prescaler S and they are supplied to respective peripheral modules.

5.1 System Clock Generator

Clock pulses can be supplied to the system clock divider either by connecting a crystal or ceramic resonator, or by providing external clock input. Figure 5.2 shows a block diagram of the system clock generator.

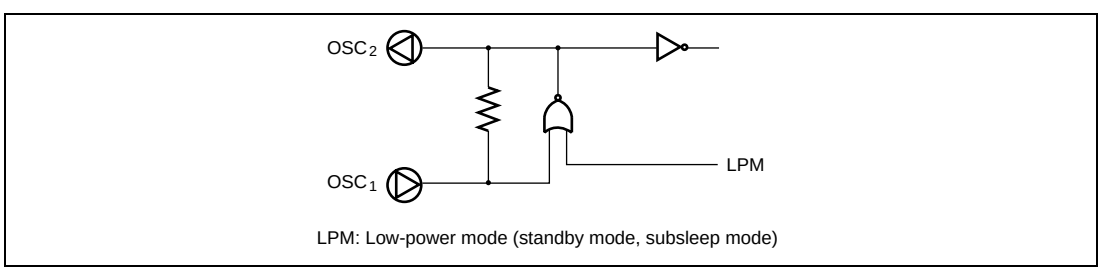

Figure 5.2 Block Diagram of System Clock Generator

5.1.1 Connecting Crystal Resonator

Figure 5.3 shows a typical method of connecting a crystal resonator. An AT-cut parallel-resonance crystal resonator should be used. Figure 5.4 shows the equivalent circuit of a crystal resonator. A resonator having the characteristics given in table 5.1 should be used.

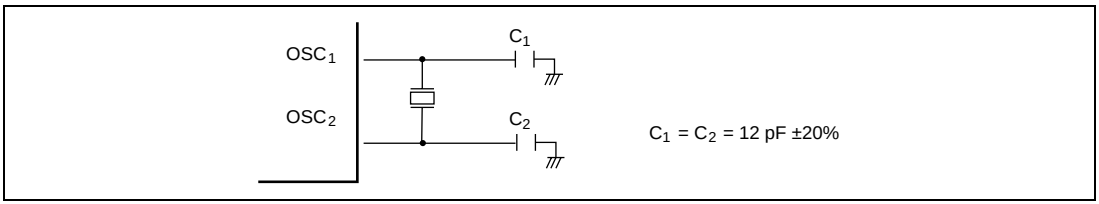

Figure 5.3 Typical Connection to Crystal Resonator

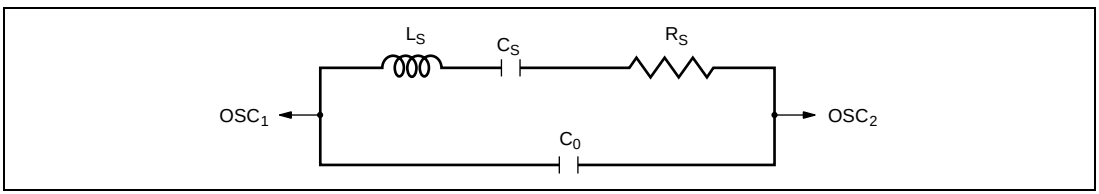

Figure 5.4 Equivalent Circuit of Crystal Resonator

Table 5.1 Crystal Resonator Parameters

Frequency (MHz)	2	4	8	10	16
R_S (max)	500 Ω	120 Ω	80 Ω	60 Ω	50 Ω
C_0 (max)	7 pF	7 pF	7 pF	7 pF	7 pF

5.1.2 Connecting Ceramic Resonator

Figure 5.5 shows a typical method of connecting a ceramic resonator.

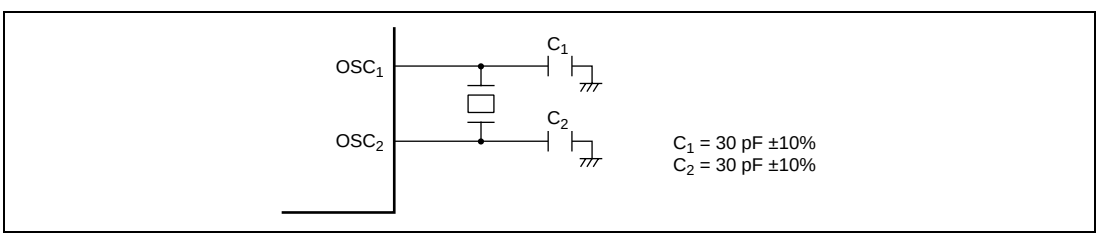

Figure 5.5 Typical Connection to Ceramic Resonator

5.1.3 External Clock Input Method

Connect an external clock signal to pin OSC_1, and leave pin OSC_2 open. Figure 5.6 shows a typical connection. The duty cycle of the external clock signal must be 45 to 55%.

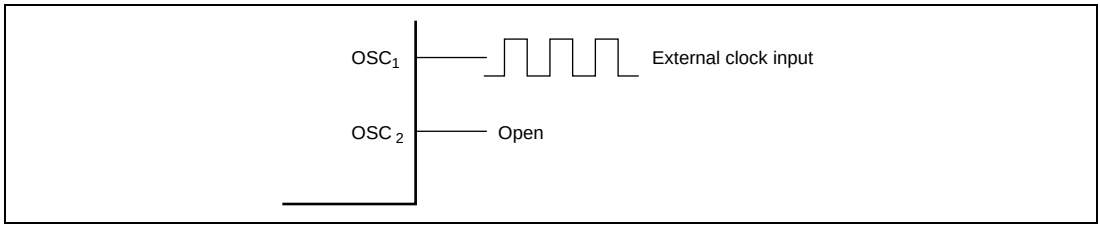

Figure 5.6 Example of External Clock Input

5.2 Prescalers

5.2.1 Prescaler S

Prescaler S is a 13-bit counter using the system clock (ø) as its input clock. It is incremented once per clock period. Prescaler S is initialized to H'0000 by a reset, and starts counting on exit from the reset state. In standby mode and subsleep mode, the system clock pulse generator stops. Prescaler S also stops and is initialized to H'0000. The CPU cannot read or write prescaler S.

The output from prescaler S is shared by the on-chip peripheral modules. The divider ratio can be set separately for each on-chip peripheral function. In active mode and sleep mode, the clock input to prescaler S is determined by the division factor designated by MA2 to MA0 in SYSCR2.

5.3 Usage Notes

5.3.1 Note on Resonators

Resonator characteristics are closely related to board design and should be carefully evaluated by the user, referring to the examples shown in this section. Resonator circuit constants will differ depending on the resonator element, stray capacitance in its interconnecting circuit, and other factors. Suitable constants should be determined in consultation with the resonator element manufacturer. Design the circuit so that the resonator element never receives voltages exceeding its maximum rating.

5.3.2 Notes on Board Design

When using a crystal resonator (ceramic resonator), place the resonator and its load capacitors as close as possible to the OSC_1 and OSC_2 pins. Other signal lines should be routed away from the oscillator circuit to prevent induction from interfering with correct oscillation (see figure 5.7).

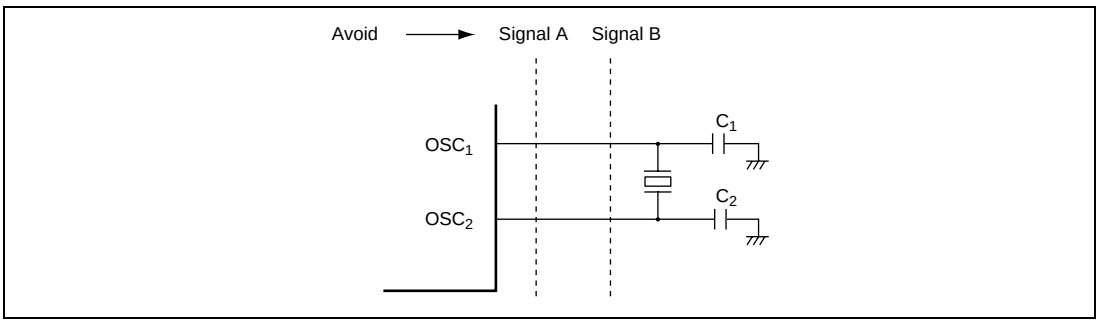

Figure 5.7 Example of Incorrect Board Design

Section 6 Power-Down Modes

This LSI has five modes of operation after a reset. These include a normal active mode and three power-down modes, in which power consumption is significantly reduced. Module standby mode reduces power consumption by selectively halting on-chip module functions.

- Active mode

  The CPU and all on-chip peripheral modules are operable on the system clock. The system clock frequency can be selected from øosc, øosc/8, øosc/16, øosc/32, and øosc/64.
- Sleep mode

  The CPU halts. On-chip peripheral modules are operable on the system clock.
- Standby mode

  The CPU and all on-chip peripheral modules halt.
- Subsleep mode

  The CPU and all on-chip peripheral modules halt. I/O ports keep the same states as before the transition.
- Module standby mode

  Independent of the above modes, power consumption can be reduced by halting on-chip peripheral modules that are not used in module units.

6.1 Register Descriptions

The registers related to power-down modes are listed below.

- System control register 1 (SYSCR1)
- System control register 2 (SYSCR2)
- Module standby control register 1 (MSTCR1)

6.1.1 System Control Register 1 (SYSCR1)

SYSCR1 controls the power-down modes, as well as SYSCR2.

Bit	Bit Name	Initial Value	R/W	Description
7	SSBY	0	R/W	Software Standby This bit selects the mode to transit after the execution of the SLEEP instruction. 0: a transition is made to sleep mode 1: a transition is made to standby mode. For details, see table 6.2.
6	STS2	0	R/W	Standby Timer Select 2 to 0 These bits designate the time the CPU and peripheral modules wait for stable clock operation after exiting from standby mode, to active mode or sleep mode due to an interrupt. The designation should be made according to the clock frequency so that the waiting time is at least 6.5 ms. The relationship between the specified value and the number of wait states is shown in table 6.1. When an external clock is to be used, the minimum value (STS2 = STS1 = STS0 =1) is recommended.
5	STS1	0	R/W	
4	STS0	0	R/W	
3 to 0	—	0	—	Reserved These bits are always read as 0.

Table 6.1 Operating Frequency and Waiting Time

STS2	STS1	STS0	Waiting Time	16 MHz	10 MHz	8 MHz	4 MHz	2 MHz	1 MHz	0.5 MHz
0	0	0	8,192 states	0.5	0.8	1.0	2.0	4.1	8.1	16.4
		1	16,384 states	1.0	1.6	2.0	4.1	8.2	16.4	32.8
	1	0	32,768 states	2.0	3.3	4.1	8.2	16.4	32.8	65.5
		1	65,536 states	4.1	6.6	8.2	16.4	32.8	65.5	131.1
1	0	0	131,072 states	8.2	13.1	16.4	32.8	65.5	131.1	262.1
		1	1,024 states	0.06	0.10	0.13	0.26	0.51	1.02	2.05
	1	0	128 states	0.00	0.01	0.02	0.03	0.06	0.13	0.26
		1	16 states	0.00	0.00	0.00	0.00	0.01	0.02	0.03

Note: Time unit is ms

6.1.2 System Control Register 2 (SYSCR2)

SYSCR2 controls the power-down modes, as well as SYSCR1.

Bit	Bit Name	Initial Value	R/W	Description
7	SMSEL	0	R/W	Sleep Mode Selection This bit selects the mode to transit after the execution of a SLEEP instruction, as well as bit SSBY of SYSCR1. For details, see table 6.2.
6	—	0	—	Reserved This bit is always read as 0.
5	DTON	0	R/W	Direct Transfer on Flag This bit selects the mode to transit after the execution of a SLEEP instruction, as well as bit SSBY of SYSCR1. For details, see table 6.2.
4	MA2	0	R/W	Active Mode Clock Select 2 to 0
3	MA1	0	R/W	These bits select the operating clock frequency in active and sleep modes. The operating clock frequency changes to the set frequency after the SLEEP instruction is executed.
2	MA0	0	R/W	0XX: ϕ_{osc} 100: $\phi_{osc}/8$ 101: $\phi_{osc}/16$ 110: $\phi_{osc}/32$ 111: $\phi_{osc}/64$
1	—	0	—	Reserved
0	—	0	—	These bits are always read as 0.

Legend X: Don't care.

6.1.3 Module Standby Control Register 1 (MSTCR1)

MSTCR1 allows the on-chip peripheral modules to enter a standby state in module units.

Bit	Bit Name	Initial Value	R/W	Description
7	—	0	—	Reserved
6	—		—	These bits are always read as 0.
5	MSTS3	0	R/W	SCI3 Module Standby SCI3 enters standby mode when this bit is set to 1
4	MSTAD	0	R/W	A/D Converter Module Standby A/D converter enters standby mode when this bit is set to 1
3	MSTWD	0	R/W	Watchdog Timer Module Standby Watchdog timer enters standby mode when this bit is set to 1.When the internal oscillator is selected for the watchdog timer clock, the watchdog timer operates regardless of the setting of this bit
2	MSTTW	0	R/W	Timer W Module Standby Timer W enters standby mode when this bit is set to 1
1	MSTTV	0	R/W	Timer V Module Standby Timer V enters standby mode when this bit is set to 1
0	—	0	—	Reserved This bit is always read as 0.

6.2 Mode Transitions and States of LSI

Figure 6.1 shows the possible transitions among these operating modes. A transition is made from the program execution state to the program halt state of the program by executing a SLEEP instruction. Interrupts allow for returning from the program halt state to the program execution state of the program. A direct transition from active mode to active mode changes the operating frequency. $\overline{\text{RES}}$ input enables transitions from a mode to the reset state. Table 6.2 shows the transition conditions of each mode after the SLEEP instruction is executed and a mode to return by an interrupt. Table 6.3 shows the internal states of the LSI in each mode.

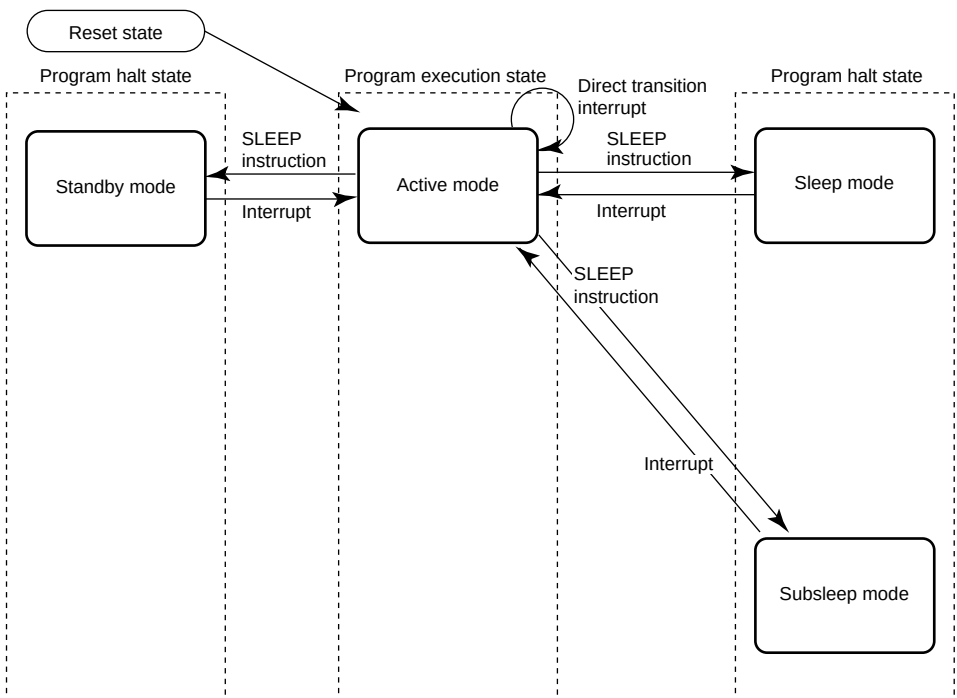

Notes: 1. To make a transition to another mode by an interrupt, make sure interrupt handling is after the interrupt is accepted.
2. Details on the mode transition conditions are given in table 6.2.

Figure 6.1 Mode Transition Diagram

Table 6.2 Transition Mode after SLEEP Instruction Execution and Interrupt Handling

DTON	SSBY	SMSEL	Transition Mode after SLEEP Instruction Execution	Transition Mode due to Interrupt
0	0	0	Sleep mode	Active mode
	0	1	Subsleep mode	Active mode
	1	X	Standby mode	Active mode
1	X	0*	Active mode (direct transition)	—

Legend: X: Don't care.

* When a state transition is performed while SMSEL is 1, timer V, SCI3, and the A/D converter are reset, and all registers are set to their initial values. To use these functions after entering active mode, reset the registers.

Table 6.3 Internal State in Each Operating Mode

Function		Active Mode	Sleep Mode	Subsleep Mode	Standby Mode
System clock oscillator		Functioning	Functioning	Halted	Halted
CPU operations	Instructions	Functioning	Halted	Halted	Halted
	Registers	Functioning	Retained	Retained	Retained
RAM		Functioning	Retained	Retained	Retained
IO ports		Functioning	Retained	Retained	Register contents are retained, but output is the high-impedance state.
External interrupts	IRQ3, IRQ0	Functioning	Functioning	Functioning	Functioning
	WKP5 to WKP0	Functioning	Functioning	Functioning	Functioning
Peripheral functions	Timer V	Functioning	Functioning	Reset	Reset
	Timer W	Functioning	Functioning	Retained	Retained (if internal clock ϕ is selected as a count clock, the counter is incremented by a subclock)
	Watchdog timer	Functioning	Functioning	Retained	Retained (functioning if the internal oscillator is selected as a count clock)
	SCI3	Functioning	Functioning	Reset	Reset
	A/D converter	Functioning	Functioning	Reset	Reset

6.2.1 Sleep Mode

In sleep mode, CPU operation is halted but the on-chip peripheral modules function at the clock frequency set by the MA2 to MA0 bits in SYSCR2. CPU register contents are retained. When an interrupt is requested, sleep mode is cleared and interrupt exception handling starts. Sleep mode is not cleared if the I bit of the condition code register (CCR) is set to 1 or the requested interrupt is disabled in the interrupt enable register. a transition is made to subactive mode when the bit is 1.

When the $\overline{\text{RES}}$ pin goes low, the CPU goes into the reset state and sleep mode is cleared.

6.2.2 Standby Mode

In standby mode, the clock pulse generator stops, so the CPU and on-chip peripheral modules stop functioning. However, as long as the rated voltage is supplied, the contents of CPU registers, on-chip RAM, and some on-chip peripheral module registers are retained. On-chip RAM contents will be retained as long as the voltage set by the RAM data retention voltage is provided. The I/O ports go to the high-impedance state.

Standby mode is cleared by an interrupt. When an interrupt is requested, the system clock pulse generator starts. After the time set in bits STS2–STS0 in SYSCR1 has elapsed, and interrupt exception handling starts. Standby mode is not cleared if the I bit of CCR is set to 1 or the requested interrupt is disabled in the interrupt enable register.

When the $\overline{\text{RES}}$ pin goes low, the system clock pulse generator starts. Since system clock signals are supplied to the entire chip as soon as the system clock pulse generator starts functioning, the $\overline{\text{RES}}$ pin must be kept low until the pulse generator output stabilizes. After the pulse generator output has stabilized, the CPU starts reset exception handling if the $\overline{\text{RES}}$ pin is driven high.

6.2.3 Subsleep Mode

In subsleep mode, the system clock oscillator is halted, and operation of the CPU and on-chip peripheral modules is halted. As long as a required voltage is applied, the contents of CPU registers, the on-chip RAM, and some registers of the on-chip peripheral modules are retained. I/O ports keep the same states as before the transition.

Subsleep mode is cleared by an interrupt. When an interrupt is requested, the system clock oscillator starts to oscillate. Subsleep mode is cleared and an interrupt exception handling starts when the time set in bits STS2 to STS0 in SYSCR1 elapses. Subsleep mode is not cleared if the I bit of CCR is 1 or the interrupt is disabled in the interrupt enable bit.

6.3 Operating Frequency in Active Mode

Operation in active mode is clocked at the frequency designated by the MA2 to MA0 bits in SYSCR2. The operating frequency changes to the set frequency after SLEEP instruction execution.

6.4 Direct Transition

The CPU can execute programs in active mode. The operating frequency can be changed by making a transition directly from active mode to active mode. A direct transition can be made by executing a SLEEP instruction while the DTON bit in SYSCR2 is set to 1. The direct transition also enables operating frequency modification in active mode. After the mode transition, direct transition interrupt exception handling starts.

If the direct transition interrupt is disabled in interrupt enable register 1, a transition is made instead to sleep mode. Note that if a direct transition is attempted while the I bit in CCR is set to 1, sleep mode will be entered, and the resulting mode cannot be cleared by means of an interrupt.

6.5 Module Standby Function

The module-standby function can be set to any peripheral module. In module standby mode, the clock supply to modules stops to enter the power-down mode. Module standby mode enables each on-chip peripheral module to enter the standby state by setting a bit that corresponds to each module in MSTCR1 and MSTCR2 to 1 and cancels the mode by clearing the bit to 0.

Section 7 ROM

The features of the 20-kbyte (4 kbytes of them are the E10T control program area) flash memory built into HD64F3672 are summarized below.

- Programming/erase methods
  - The flash memory is programmed 128 bytes at a time. Erase is performed in single-block units. The flash memory is configured as follows: 1 kbyte × 4 blocks, 16 kbytes × 1 block. To erase the entire flash memory, each block must be erased in turn.
- Reprogramming capability
  - The flash memory can be reprogrammed up to 1,000 times.
- On-board programming
  - On-board programming/erasing can be done in boot mode, in which the boot program built into the chip is started to erase or program of the entire flash memory. In normal user program mode, individual blocks can be erased or programmed.
- Automatic bit rate adjustment
  - For data transfer in boot mode, this LSI's bit rate can be automatically adjusted to match the transfer bit rate of the host.
- Programming/erasing protection
  - Sets software protection against flash memory programming/erasing.

7.1 Block Configuration

Figure 7.1 shows the block configuration of 20-kbyte flash memory. The thick lines indicate erasing units, the narrow lines indicate programming units, and the values are addresses. The flash memory is divided into 1 kbyte × 4 blocks and 16 kbytes × 1 block. Erasing is performed in these units. Programming is performed in 128-byte units starting from an address with lower eight bits H'00 or H'80.

	H'0000	H'0001	H'0002	← Programming unit: 128 bytes →	H'007F
Erase unit	H'0080	H'0081	H'0082		H'00FF
1kbyte					
	H'0380	H'0381	H'0382		H'03FF
	H'0400	H'0401	H'0402	← Programming unit: 128 bytes →	H'047F
Erase unit	H'0480	H'0481	H'0481		H'04FF
1kbyte					
	H'0780	H'0781	H'0782		H'07FF
	H'0800	H'0801	H'0802	← Programming unit: 128 bytes →	H'087F
Erase unit	H'0880	H'0881	H'0882		H'08FF
1kbyte					
	H'0B80	H'0B81	H'0B82		H'0BFF
	H'0C00	H'0C01	H'0C02	← Programming unit: 128 bytes →	H'0C7F
Erase unit	H'0C80	H'0C81	H'0C82		H'0CFF
1kbyte					
	H'0F80	H'0F81	H'0F82		H'0FFF
	H'1000	H'1001	H'1002	← Programming unit: 128 bytes →	H'107F
Erase unit	H'1080	H'1081	H'1082		H'10FF
16 kbytes					
	H'4F80	H'4F81	H'4F82		H'4FFF

Figure 7.1 Flash Memory Block Configuration

7.2 Register Descriptions

The flash memory has the following registers.

- Flash memory control register 1 (FLMCR1)
- Flash memory control register 2 (FLMCR2)
- Erase block register 1 (EBR1)
- Flash memory enable register (FENR)

7.2.1 Flash Memory Control Register 1 (FLMCR1)

FLMCR1 is a register that makes the flash memory change to program mode, program-verify mode, erase mode, or erase-verify mode. For details on register setting, refer to section 7.4, Flash Memory Programming/Erasing.

Bit	Bit Name	Initial Value	R/W	Description
7	—	0	—	Reserved This bit is always read as 0.
6	SWE	0	R/W	Software Write Enable When this bit is set to 1, flash memory programming/erasing is enabled. When this bit is cleared to 0, other FLMCR1 register bits and all EBR1 bits cannot be set.
5	ESU	0	R/W	Erase Setup When this bit is set to 1, the flash memory changes to the erase setup state. When it is cleared to 0, the erase setup state is cancelled. Set this bit to 1 before setting the E bit to 1 in FLMCR1.
4	PSU	0	R/W	Program Setup When this bit is set to 1, the flash memory changes to the program setup state. When it is cleared to 0, the program setup state is cancelled. Set this bit to 1 before setting the P bit in FLMCR1.
3	EV	0	R/W	Erase-Verify When this bit is set to 1, the flash memory changes to erase-verify mode. When it is cleared to 0, erase-verify mode is cancelled.
2	PV	0	R/W	Program-Verify When this bit is set to 1, the flash memory changes to program-verify mode. When it is cleared to 0, program-verify mode is cancelled.
1	E	0	R/W	Erase When this bit is set to 1, and while the SWE=1 and ESU=1 bits are 1, the flash memory changes to erase mode. When it is cleared to 0, erase mode is cancelled.
0	P	0	R/W	Program When this bit is set to 1, and while the SWE=1 and PSU=1 bits are 1, the flash memory changes to program mode. When it is cleared to 0, program mode is cancelled.

7.2.2 Flash Memory Control Register 2 (FLMCR2)

FLMCR2 is a register that displays the state of flash memory programming/erasing. FLMCR2 is a read-only register, and should not be written to.

Bit	Bit Name	Initial Value	R/W	Description
7	FLER	0	R	Flash Memory Error Indicates that an error has occurred during an operation on flash memory (programming or erasing). When FLER is set to 1, flash memory goes to the error-protection state. See 7.5.3, Error Protection, for details.
6 to 0	—	All 0	—	Reserved These bits are always read as 0.

7.2.3 Erase Block Register 1 (EBR1)

EBR1 specifies the flash memory erase area block. EBR1 is initialized to H'00 when the SWE bit in FLMCR1 is 0. Do not set more than one bit at a time, as this will cause all the bits in EBR1 to be automatically cleared to 0.

Bit	Bit Name	Initial Value	R/W	Description
7 to 5	—	All 0	—	Reserved These bits are always read as 0.
4	EB4	0	R/W	When this bit is set to 1, 16 kbytes of H'1000 to H'4FFF will be erased.
3	EB3	0	R/W	When this bit is set to 1, 1 kbyte of H'0C00 to H'0FFF will be erased.
2	EB2	0	R/W	When this bit is set to 1, 1 kbyte of H'0800 to H'0BFF will be erased.
1	EB1	0	R/W	When this bit is set to 1, 1 kbyte of H'0400 to H'07FF will be erased.
0	EB0	0	R/W	When this bit is set to 1, 1 kbyte of H'0000 to H'03FF will be erased.

7.2.4 Flash Memory Enable Register (FENR)

Bit 7 (FLSHE) in FENR enables or disables the CPU access to the flash memory control registers, FLMCR1, FLMCR2, and EBR1.

Bit	Bit Name	Initial Value	R/W	Description
7	FLSHE	0	R/W	Flash Memory Control Register Enable Flash memory control registers can be accessed when this bit is set to 1. Flash memory control registers cannot be accessed when this bit is set to 0.
6 to 0	—	All 0	—	Reserved These bits are always read as 0.

7.3 On-Board Programming Modes

There is a mode for programming/erasing of the flash memory; boot mode, which enables on-board programming/erasing. On-board programming/erasing can also be performed in user program mode. At reset-start in reset mode, this LSI changes to a mode depending on the TEST pin settings, $\overline{\text{NMI}}$ pin settings, and input level of each port, as shown in table 7.1. The input level of each pin must be defined four states before the reset ends.

When changing to boot mode, the boot program built into this LSI is initiated. The boot program transfers the programming control program from the externally-connected host to on-chip RAM via SCI3. After erasing the entire flash memory, the programming control program is executed. This can be used for programming initial values in the on-board state or for a forcible return when programming/erasing can no longer be done in user program mode. In user program mode, individual blocks can be erased and programmed by branching to the user program/erase control program prepared by the user.

Table 7.1 Setting Programming Modes

TEST	$\overline{\text{NMI}}$	E10T_0	PB0	PB1	PB2	LSI State after Reset End
0	1	X	X	X	X	User Mode
0	0	1	X	X	X	Boot Mode

Legend: X: Don't care.

7.3.1 Boot Mode

Table 7.2 shows the boot mode operations between reset end and branching to the programming control program.

1. When boot mode is used, the flash memory programming control program must be prepared in the host beforehand. Prepare a programming control program in accordance with the description in section 7.4, Flash Memory Programming/Erasing.
2. SCI3 should be set to asynchronous mode, and the transfer format as follows: 8-bit data, 1 stop bit, and no parity.
3. When the boot program is initiated, the chip measures the low-level period of asynchronous SCI communication data (H'00) transmitted continuously from the host. The chip then calculates the bit rate of transmission from the host, and adjusts the SCI3 bit rate to match that of the host. The reset should end with the RxD pin high. The RxD and TxD pins should be pulled up on the board if necessary. After the reset is complete, it takes approximately 100 states before the chip is ready to measure the low-level period.
4. After matching the bit rates, the chip transmits one H'00 byte to the host to indicate the completion of bit rate adjustment. The host should confirm that this adjustment end indication (H'00) has been received normally, and transmit one H'55 byte to the chip. If reception could not be performed normally, initiate boot mode again by a reset. Depending on the host's transfer bit rate and system clock frequency of this LSI, there will be a discrepancy between the bit rates of the host and the chip. To operate the SCI properly, set the host's transfer bit rate and system clock frequency of this LSI within the ranges listed in table 7.3.
5. In boot mode, a part of the on-chip RAM area is used by the boot program. The area H'F780 to H'FEEF is the area to which the programming control program is transferred from the host. The boot program area cannot be used until the execution state in boot mode switches to the programming control program.
6. Before branching to the programming control program, the chip terminates transfer operations by SCI3 (by clearing the RE and TE bits in SCR3 to 0), however the adjusted bit rate value remains set in BRR. Therefore, the programming control program can still use it for transfer of write data or verify data with the host. The TxD pin is high (PCR22 = 1, P22 = 1). The contents of the CPU general registers are undefined immediately after branching to the programming control program. These registers must be initialized at the beginning of the programming control program, as the stack pointer (SP), in particular, is used implicitly in subroutine calls, etc.
7. Boot mode can be cleared by a reset. End the reset after driving the reset pin low, waiting at least 20 states, and then setting the TEST pin and $\overline{\text{NMI}}$ pin. Boot mode is also cleared when a WDT overflow occurs.
8. Do not change the TEST pin and NMI pin input levels in boot mode.

Table 7.2 Boot Mode Operation

Item	Host Operation Processing Contents	Communication Contents	LSI Operation Processing Contents
Boot mode initiation			Branches to boot program at reset-start. Boot program initiation
Bit rate adjustment	Continuously transmits data H'00 at specified bit rate.	H'00, H'00 · · · H'00 →	• Measures low-level period of receive data H'00. • Calculates bit rate and sets BRR in SCI3.
	Transmits data H'55 when data H'00 is received error-free.	← H'00 H'55 →	• Transmits data H'00 to host as adjustment end indication.
Flash memory erase	Boot program erase error	← H'FF	Checks flash memory data, erases all flash memory blocks in case of written data existing, and transmits data H'AA to host. (If erase could not be done, transmits data H'FF to host and aborts operation.)
	H'AA reception	← H'AA	
Transfer of number of bytes of programming control program	Transmits number of bytes (N) of programming control program to be transferred as 2-byte data (low-order byte following high-order byte)	Upper bytes, lower bytes →	Echobacks the 2-byte data received to host.
		← Echoback	
	Transmits 1-byte of programming control program (repeated for N times)	H'XX →	Echobacks received data to host and also transfers it to RAM. (repeated for N times)
		← Echoback	
	H'AA reception	← H'AA	Transmits data H'AA to host when data H'55 is received.
			Branches to programming control program transferred to on-chip RAM and starts execution.

Table 7.3 System Clock Frequencies for which Automatic Adjustment of LSI Bit Rate is Possible

Host Bit Rate	System Clock Frequency Range of LSI
19,200 bps	16 MHz
9,600 bps	8 to 16 MHz
4,800 bps	4 to 16 MHz
2,400 bps	2 to 16 MHz

7.3.2 Programming/Erasing in User Program Mode

On-board programming/erasing of an individual flash memory block can also be performed in user program mode by branching to a user program/erase control program. The user must set branching conditions and provide on-board means of supplying programming data. The flash memory must contain the user program/erase control program or a program that provides the user program/erase control program from external memory. As the flash memory itself cannot be read during programming/erasing, transfer the user program/erase control program to on-chip RAM, as in boot mode. Figure 7.2 shows a sample procedure for programming/erasing in user program mode. Prepare a user program/erase control program in accordance with the description in section 7.4, Flash Memory Programming/Erasing.

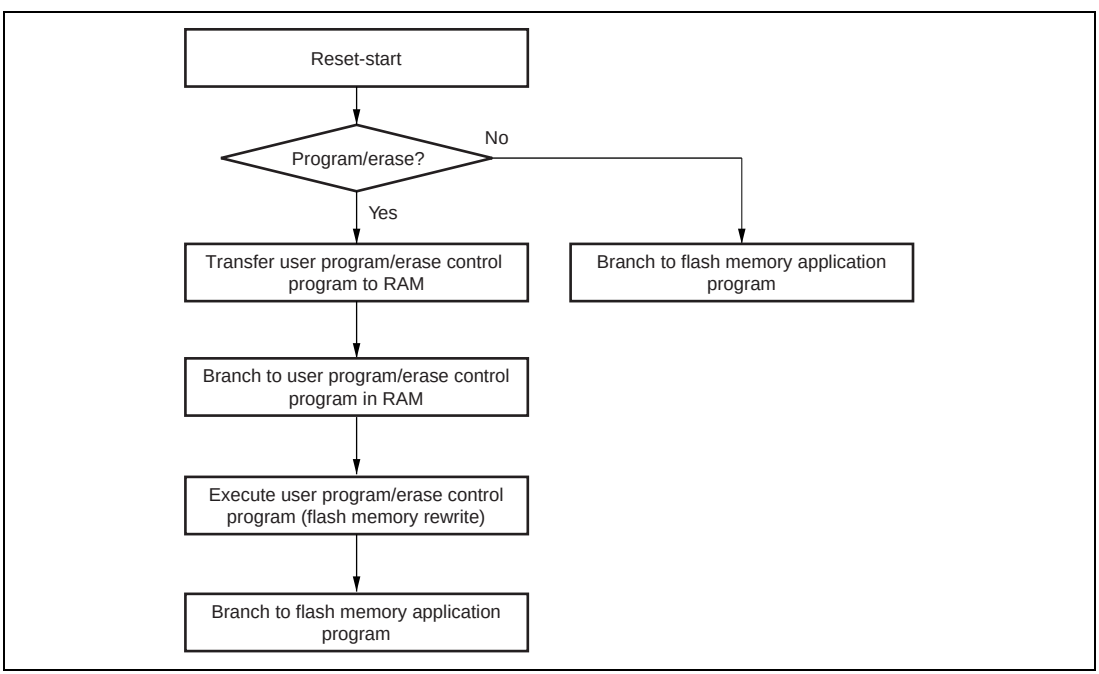

Figure 7.2 Programming/Erasing Flowchart Example in User Program Mode

7.4 Flash Memory Programming/Erasing

A software method using the CPU is employed to program and erase flash memory in the on-board programming modes. Depending on the FLMCR1 setting, the flash memory operates in one of the following four modes: Program mode, program-verify mode, erase mode, and erase-verify mode. The programming control program in boot mode and the user program/erase control program in user program mode use these operating modes in combination to perform programming/erasing. Flash memory programming and erasing should be performed in accordance with the descriptions in section 7.4.1, Program/Program-Verify and section 7.4.2, Erase/Erase-Verify, respectively.

7.4.1 Program/Program-Verify

When writing data or programs to the flash memory, the program/program-verify flowchart shown in figure 7.3 should be followed. Performing programming operations according to this flowchart will enable data or programs to be written to the flash memory without subjecting the chip to voltage stress or sacrificing program data reliability.

1. Programming must be done to an empty address. Do not reprogram an address to which programming has already been performed.
2. Programming should be carried out 128 bytes at a time. A 128-byte data transfer must be performed even if writing fewer than 128 bytes. In this case, H'FF data must be written to the extra addresses.
3. Prepare the following data storage areas in RAM: A 128-byte programming data area, a 128-byte reprogramming data area, and a 128-byte additional-programming data area. Perform reprogramming data computation according to table 7.4, and additional programming data computation according to table 7.5.
4. Consecutively transfer 128 bytes of data in byte units from the reprogramming data area or additional-programming data area to the flash memory. The program address and 128-byte data are latched in the flash memory. The lower 8 bits of the start address in the flash memory destination area must be H'00 or H'80.
5. The time during which the P bit is set to 1 is the programming time. Table 7.6 shows the allowable programming times.
6. The watchdog timer (WDT) is set to prevent overprogramming due to program runaway, etc. An overflow cycle of approximately 6.6 ms is allowed.
7. For a dummy write to a verify address, write 1-byte data H'FF to an address whose lower 2 bits are B'00. Verify data can be read in words or in longwords from the address to which a dummy write was performed.
8. The maximum number of repetitions of the program/program-verify sequence of the same bit is 1,000.

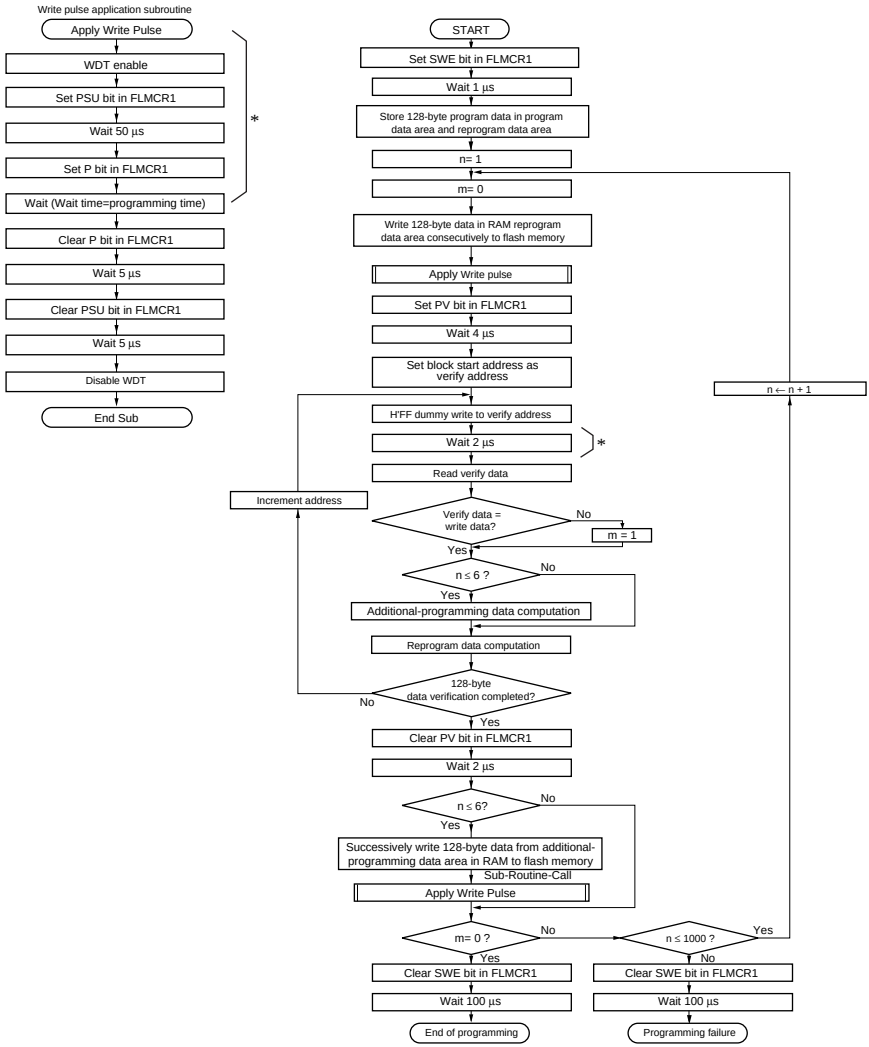

Note: *The RTS instruction must not be used during the following 1. and 2. periods.
1. A period between 128-byte data programming to flash memory and the P bit clearing
2. A period between dummy writing of H'FF to a verify address and verify data reading

Figure 7.3 Program/Program-Verify Flowchart

Table 7.4 Reprogram Data Computation Table

Program Data	Verify Data	Reprogram Data	Comments
0	0	1	Programming completed
0	1	0	Reprogram bit
1	0	1	—
1	1	1	Remains in erased state

Table 7.5 Additional-Program Data Computation Table

Reprogram Data	Verify Data	Additional-Program Data	Comments
0	0	0	Additional-program bit
0	1	1	No additional programming
1	0	1	No additional programming
1	1	1	No additional programming

Table 7.6 Programming Time

n (Number of Writes)	Programming Time	In Additional Programming	Comments
1 to 6	30	10	
7 to 1,000	200	—	

Note: Time shown in µs.

7.4.2 Erase/Erase-Verify

When erasing flash memory, the erase/erase-verify flowchart shown in figure 7.4 should be followed.

1. Prewriting (setting erase block data to all 0s) is not necessary.
2. Erasing is performed in block units. Make only a single-bit specification in the erase block register (EBR1). To erase multiple blocks, each block must be erased in turn.
3. The time during which the E bit is set to 1 is the flash memory erase time.
4. The watchdog timer (WDT) is set to prevent overerasing due to program runaway, etc. An overflow cycle of approximately 19.8 ms is allowed.
5. For a dummy write to a verify address, write 1-byte data H'FF to an address whose lower two bits are B'00. Verify data can be read in longwords from the address to which a dummy write was performed.

6. If the read data is not erased successfully, set erase mode again, and repeat the erase/erase-verify sequence as before. The maximum number of repetitions of the erase/erase-verify sequence is 100.

7.4.3 Interrupt Handling when Programming/Erasing Flash Memory

All interrupts, including the $\overline{\text{NMI}}$ interrupt, are disabled while flash memory is being programmed or erased, or while the boot program is executing, for the following three reasons:

1. Interrupt during programming/erasing may cause a violation of the programming or erasing algorithm, with the result that normal operation cannot be assured.
2. If interrupt exception handling starts before the vector address is written or during programming/erasing, a correct vector cannot be fetched and the CPU malfunctions.
3. If an interrupt occurs during boot program execution, normal boot mode sequence cannot be carried out.

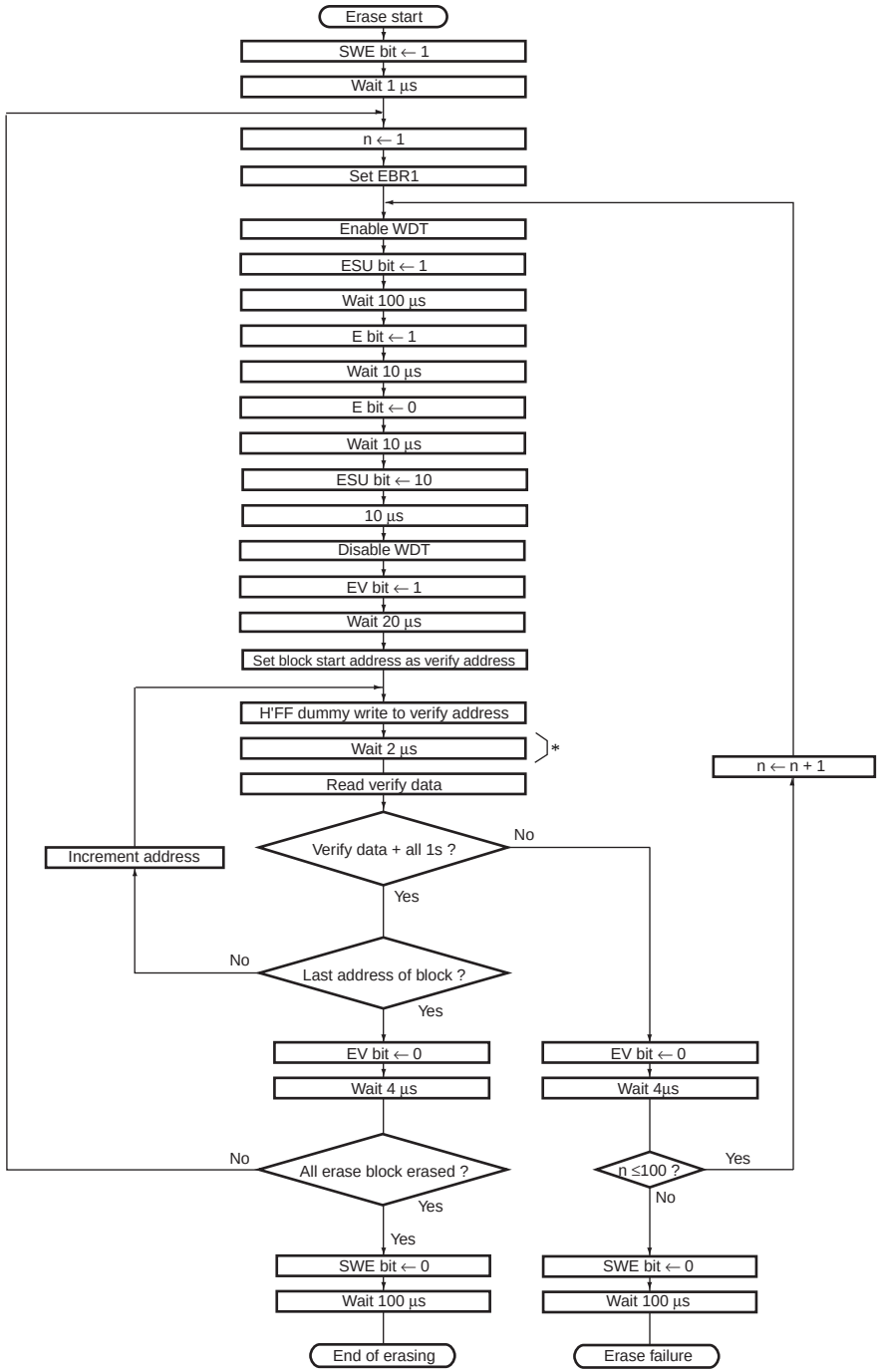

Note: *The RTS instruction must not be used during a period between dummy writing of H'FF to a verify address and verify data reading.

Figure 7.4 Erase/Erase-Verify Flowchart

7.5 Program/Erase Protection

There are three kinds of flash memory program/erase protection; hardware protection, software protection, and error protection.

7.5.1 Hardware Protection

Hardware protection refers to a state in which programming/erasing of flash memory is forcibly disabled or aborted because of a transition to reset, subsleep mode or standby mode. Flash memory control register 1 (FLMCR1), flash memory control register 2 (FLMCR2), and erase block register 1 (EBR1) are initialized. In a reset via the $\overline{\text{RES}}$ pin, the reset state is not entered unless the $\overline{\text{RES}}$ pin is held low until oscillation stabilizes after powering on. In the case of a reset during operation, hold the $\overline{\text{RES}}$ pin low for the $\overline{\text{RES}}$ pulse width specified in the AC Characteristics section.

7.5.2 Software Protection

Software protection can be implemented against programming/erasing of all flash memory blocks by clearing the SWE bit in FLMCR1. When software protection is in effect, setting the P or E bit in FLMCR1 does not cause a transition to program mode or erase mode. By setting the erase block register 1 (EBR1), erase protection can be set for individual blocks. When EBR1 is set to H'00, erase protection is set for all blocks.

7.5.3 Error Protection

In error protection, an error is detected when CPU runaway occurs during flash memory programming/erasing, or operation is not performed in accordance with the program/erase algorithm, and the program/erase operation is aborted. Aborting the program/erase operation prevents damage to the flash memory due to overprogramming or overerasing.

When the following errors are detected during programming/erasing of flash memory, the FLER bit in FLMCR2 is set to 1, and the error protection state is entered.

- When the flash memory of the relevant address area is read during programming/erasing (including vector read and instruction fetch)
- Immediately after exception handling excluding a reset during programming/erasing
- When a SLEEP instruction is executed during programming/erasing

The FLMCR1, FLMCR2, and EBR1 settings are retained, however program mode or erase mode is aborted at the point at which the error occurred. Program mode or erase mode cannot be re-entered by re-setting the P or E bit. However, PV and EV bit setting is enabled, and a transition can be made to verify mode. Error protection can be cleared only by a power-on reset.

Section 8 RAM

This LSI has 2 kbytes of on-chip high-speed static RAM. The RAM is connected to the CPU by a 16-bit data bus, enabling two-state access by the CPU to both byte data and word data.

Section 9 I/O Ports

The series of this LSI has twenty-six general I/O ports and four general input-only ports. Port 8 is a large current port, which can drive 20 mA (@V_{OL} = 1.5 V) when a low level signal is output. Any of these ports can become an input port immediately after a reset. They can also be used as I/O pins of the on-chip peripheral modules or external interrupt input pins, and these functions can be switched depending on the register settings. The registers for selecting these functions can be divided into two types: those included in I/O ports and those included in each on-chip peripheral module. General I/O ports are comprised of the port control register for controlling inputs/outputs and the port data register for storing output data and can select inputs/outputs in bit units. For functions in each port, see appendix B.1, I/O Port Block Diagrams. For the execution of bit manipulation instructions to the port control register and port data register, see section 2.8.3, Bit Manipulation Instruction.

9.1 Port 1

Port 1 is a general I/O port also functioning as IRQ interrupt input pins and a timer V input pin. Figure 9.1 shows its pin configuration.

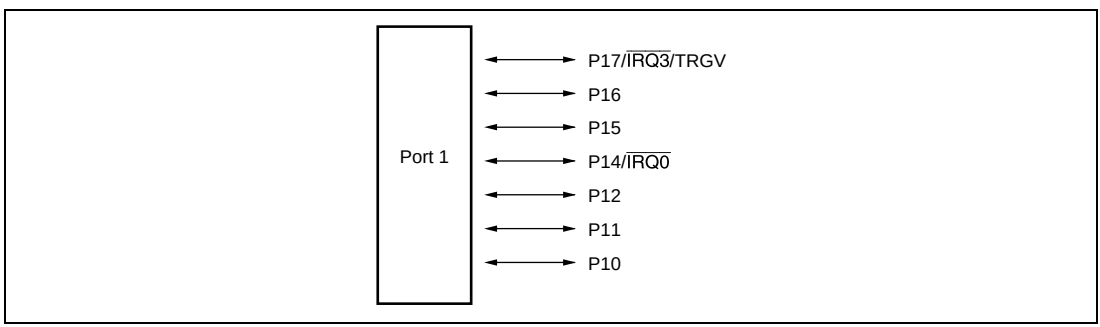

Figure 9.1 Port 1 Pin Configuration

Port 1 has the following registers.

- Port mode register 1 (PMR1)
- Port control register 1 (PCR1)
- Port data register 1 (PDR1)
- Port pull-up control register 1 (PUCR1)

9.1.1 Port Mode Register 1 (PMR1)

PMR1 switches the functions of pins in port 1 and port 2.

Bit	Bit Name	Initial Value	R/W	Description
7	IRQ3	0	R/W	P17/$\overline{\text{IRQ3}}$/TRGV Pin Function Switch This bit selects whether pin P17/$\overline{\text{IRQ3}}$/TRGV is used as P17 or as $\overline{\text{IRQ3}}$/TRGV. 0: General I/O port 1: $\overline{\text{IRQ3}}$/TRGV input pin
6	—	0	—	Reserved
5	—	0	—	These bits are always read as 0.
4	IRQ0	0	R/W	P14/$\overline{\text{IRQ0}}$ Pin Function Switch This bit selects whether pin P14/$\overline{\text{IRQ0}}$ is used as P14 or as $\overline{\text{IRQ0}}$. 0: General I/O port 1: $\overline{\text{IRQ0}}$ input pin
3	—	1	—	Reserved This bit is always read as 1.
2	—	0	R/W	Reserved This bit must always be cleared to 0 (setting to 1 is disabled).
1	TXD	0	R/W	P22/TXD Pin Function Switch This bit selects whether pin P22/TXD is used as P22 or as TXD. 0: General I/O port 1: TXD output pin
0	—	0	—	Reserved These bits are always read as 0.

9.1.2 Port Control Register 1 (PCR1)

PCR1 selects inputs/outputs in bit units for pins to be used as general I/O ports of port 1.

Bit	Bit Name	Initial Value	R/W	Description
7	PCR17	0	W	When the corresponding pin is designated in PMR1 as a general I/O pin, setting a PCR1 bit to 1 makes the corresponding pin an output port, while clearing the bit to 0 makes the pin an input port.
6	PCR16	0	W	
5	PCR15	0	W	
4	PCR14	0	W	Bit 3 is a reserved bit.
3	—	—	—	
2	PCR12	0	W	
1	PCR11	0	W	
0	PCR10	0	W	

9.1.3 Port Data Register 1 (PDR1)

PDR1 is a general I/O port data register of port 1.

Bit	Bit Name	Initial Value	R/W	Description
7	P17	0	R/W	PDR1 stores output data for port 1 pins.
6	P16	0	R/W	If PDR1 is read while PCR1 bits are set to 1, the value stored in PDR1 are read. If PDR1 is read while PCR1 bits are cleared to 0, the pin states are read regardless of the value stored in PDR1.
5	P15	0	R/W	
4	P14	0	R/W	
3	—	1	—	Bit 3 is a reserved bit. This bit is always read as 1.
2	P12	0	R/W	
1	P11	0	R/W	
0	P10	0	R/W	

9.1.4 Port Pull-Up Control Register 1 (PUCR1)

PUCR1 controls the pull-up MOS in bit units of the pins set as the input ports.

Bit	Bit Name	Initial Value	R/W	Description
7	PUCR17	0	R/W	Only bits for which PCR1 is cleared are valid. The pull-up MOS of P17 to P14 and P12 to P10 pins enter the on-state when these bits are set to 1, while they enter the off-state when these bits are cleared to 0. Bit 3 is a reserved bit. This bit is always read as 1.
6	PUCR16	0	R/W	
5	PUCR15	0	R/W	
4	PUCR14	0	R/W	
3	—	1	—	
2	PUCR12	0	R/W	
1	PUCR11	0	R/W	
0	PUCR10	0	R/W	

9.1.5 Pin Functions

The correspondence between the register specification and the port functions is shown below.

P17/$\overline{\text{IRQ3}}$/TRGV pin

Register	PMR1	PCR1	
Bit Name	**IRQ3**	**PCR17**	**Pin Function**
Setting value	0	0	P17 input pin
		1	P17 output pin
	1	X	$\overline{\text{IRQ3}}$ input/TRGV input pin

Legend X: Don't care.

P16 pin

Register	PCR1	
Bit Name	**PCR16**	**Pin Function**
Setting value	0	P16 input pin
	1	P16 output pin

P15 pin

Register	PCR1	
Bit Name	**PCR15**	**Pin Function**
Setting value	0	P15 input pin
	1	P15 output pin

P14/$\overline{\text{IRQ0}}$ pin

Register	PMR1	PCR1	
Bit Name	**IRQ0**	**PCR14**	**Pin Function**
Setting value	0	0	P14 input pin
		1	P14 output pin
	1	X	$\overline{\text{IRQ0}}$ input pin

Legend X: Don't care.

P12 pin

Register	PCR1	
Bit Name	**PCR12**	**Pin Function**
Setting value	0	P12 input pin
	1	P12 output pin

P11 pin

Register	PCR1	
Bit Name	**PCR11**	**Pin Function**
Setting value	0	P11 input pin
	1	P11 output pin

P10 pin

Register	PCR1	
Bit Name	**PCR10**	**Pin Function**
Setting value	0	P10 input pin
	1	P10 output pin

9.2 Port 2

Port 2 is a general I/O port also functioning as a SCI3 I/O pin. Each pin of the port 2 is shown in figure 9.2. The register settings of PMR1 and SCI3 have priority for functions of the pins for both uses.

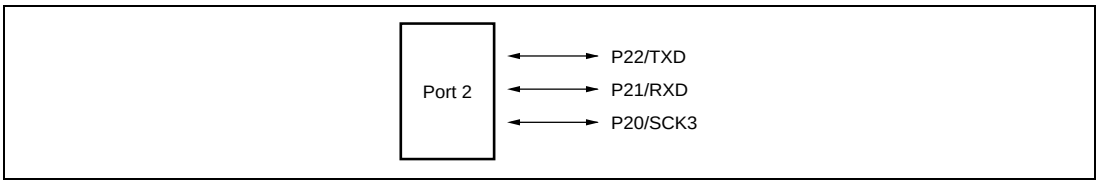

Figure 9.2 Port 2 Pin Configuration

Port 2 has the following registers.

- Port control register 2 (PCR2)
- Port data register 2 (PDR2)

9.2.1 Port Control Register 2 (PCR2)

PCR2 selects inputs/outputs in bit units for pins to be used as general I/O ports of port 2.

Bit	Bit Name	Initial Value	R/W	Description
7	—	—	—	Reserved
6	—	—	—	
5	—	—	—	
4	—	—	—	
3	—	—	—	
2	PCR22	0	W	When each of the port 2 pins P22 to P20 functions as an general I/O port, setting a PCR2 bit to 1 makes the corresponding pin an output port, while clearing the bit to 0 makes the pin an input port.
1	PCR21	0	W	
0	PCR20	0	W	

9.2.2 Port Data Register 2 (PDR2)

PDR2 is a general I/O port data register of port 2.

Bit	Bit Name	Initial Value	R/W	Description
7	—	1	—	Reserved
6	—	1	—	These bits are always read as 1.
5	—	1	—	
4	—	1	—	
3	—	1	—	
2	P22	0	R/W	PDR2 stores output data for port 2 pins.
1	P21	0	R/W	If PDR2 is read while PCR2 bits are set to 1, the value stored in PDR2 is read. If PDR2 is read while PCR2 bits are cleared to 0, the pin states are read regardless of the value stored in PDR2.
0	P20	0	R/W	

9.2.3 Pin Functions

The correspondence between the register specification and the port functions is shown below.

P22/TXD pin

Register	PMR1	PCR2	
Bit Name	**TXD**	**PCR22**	**Pin Function**
Setting Value	0	0	P22 input pin
		1	P22 output pin
	1	X	TXD output pin

Legend X: Don't care.

P21/RXD pin

Register	SCR3	PCR2	
Bit Name	**RE**	**PCR21**	**Pin Function**
Setting Value	0	0	P21 input pin
		1	P21 output pin
	1	X	RXD input pin

Legend X: Don't care.

P20/SCK3 pin

Register	SCR3		SMR	PCR2	
Bit Name	**CKE1**	**CKE0**	**COM**	**PCR20**	**Pin Function**
Setting Value	0	0	0	0	P20 input pin
				1	P20 output pin
	0	0	1	X	SCK3 output pin
	0	1	X	X	SCK3 output pin
	1	X	X	X	SCK3 input pin

Legend X: Don't care.

9.3 Port 5

Port 5 is a general I/O port also functioning as an A/D trigger input pin and wakeup interrupt input pin. Each pin of the port 5 is shown in figure 9.3.

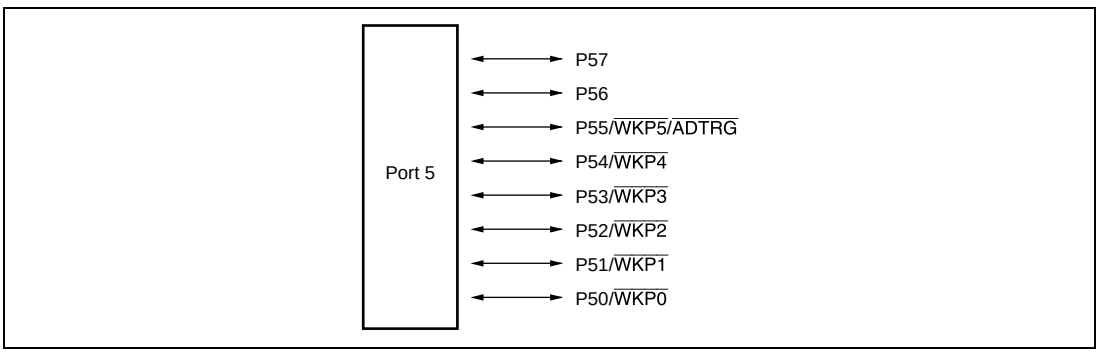

Figure 9.3 Port 5 Pin Configuration

Port 5 has the following registers.

- Port mode register 5 (PMR5)
- Port control register 5 (PCR5)
- Port data register 5 (PDR5)
- Port pull-up control register 5 (PUCR5)

9.3.1 Port Mode Register 5 (PMR5)

PMR5 switches the functions of pins in port 5.

Bit	Bit Name	Initial Value	R/W	Description
7	POF7	0	R/W	P57 Pin Function Switch 0: General I/O port 1: NMOS open-drain output
6	POF6	0	R/W	P56 Pin Function Switch 0: General I/O port 1: NMOS open-drain output
5	WKP5	0	R/W	P55/$\overline{\text{WKP5}}$/$\overline{\text{ADTRG}}$ Pin Function Switch Selects whether pin P55/$\overline{\text{WKP5}}$/$\overline{\text{ADTRG}}$ is used as P55 or as $\overline{\text{WKP5}}$/$\overline{\text{ADTRG}}$ input. 0: General I/O port 1: $\overline{\text{WKP5}}$/$\overline{\text{ADTRG}}$ input pin
4	WKP4	0	R/W	P54/$\overline{\text{WKP4}}$ Pin Function Switch Selects whether pin P54/$\overline{\text{WKP4}}$ is used as P54 or as $\overline{\text{WKP4}}$. 0: General I/O port 1: $\overline{\text{WKP4}}$ input pin
3	WKP3	0	R/W	P53/$\overline{\text{WKP3}}$ Pin Function Switch Selects whether pin P53/$\overline{\text{WKP3}}$ is used as P53 or as $\overline{\text{WKP3}}$. 0: General I/O port 1: $\overline{\text{WKP3}}$ input pin
2	WKP2	0	R/W	P52/$\overline{\text{WKP2}}$ Pin Function Switch Selects whether pin P52/$\overline{\text{WKP2}}$ is used as P52 or as $\overline{\text{WKP2}}$. 0: General I/O port 1: $\overline{\text{WKP2}}$ input pin
1	WKP1	0	R/W	P51/$\overline{\text{WKP1}}$ Pin Function Switch Selects whether pin P51/$\overline{\text{WKP1}}$ is used as P51 or as $\overline{\text{WKP1}}$. 0: General I/O port 1: $\overline{\text{WKP1}}$ input pin
0	WKP0	0	R/W	P50/$\overline{\text{WKP0}}$ Pin Function Switch Selects whether pin P50/$\overline{\text{WKP0}}$ is used as P50 or as $\overline{\text{WKP0}}$. 0: General I/O port 1: $\overline{\text{WKP0}}$ input pin

9.3.2 Port Control Register 5 (PCR5)

PCR5 selects inputs/outputs in bit units for pins to be used as general I/O ports of port 5.

Bit	Bit Name	Initial Value	R/W	Description
7	PCR57	0	W	When each of the port 5 pins P57 to P50 functions as an general I/O port, setting a PCR5 bit to 1 makes the corresponding pin an output port, while clearing the bit to 0 makes the pin an input port.
6	PCR56	0	W	
5	PCR55	0	W	
4	PCR54	0	W	
3	PCR53	0	W	
2	PCR52	0	W	
1	PCR51	0	W	
0	PCR50	0	W	

9.3.3 Port Data Register 5 (PDR5)

PDR5 is a general I/O port data register of port 5.

Bit	Bit Name	Initial Value	R/W	Description
7	P57	0	R/W	Stores output data for port 5 pins.
6	P56	0	R/W	If PDR5 is read while PCR5 bits are set to 1, the value stored in PDR5 are read. If PDR5 is read while PCR5 bits are cleared to 0, the pin states are read regardless of the value stored in PDR5.
5	P55	0	R/W	
4	P54	0	R/W	
3	P53	0	R/W	
2	P52	0	R/W	
1	P51	0	R/W	
0	P50	0	R/W	

9.3.4 Port Pull-Up Control Register 5 (PUCR5)

PUCR5 controls the pull-up MOS in bit units of the pins set as the input ports.

Bit	Bit Name	Initial Value	R/W	Description
7	—	0	—	Reserved
6	—	0	—	These bits are always read as 0.
5	PUCR55	0	R/W	Only bits for which PCR5 is cleared are valid. The pull-up MOS of the corresponding pins enter the on-state when these bits are set to 1, while they enter the off-state when these bits are cleared to 0.
4	PUCR54	0	R/W	
3	PUCR53	0	R/W	
2	PUCR52	0	R/W	
1	PUCR51	0	R/W	
0	PUCR50	0	R/W	

9.3.5 Pin Functions

The correspondence between the register specification and the port functions is shown below.

P57 pin

Register	PMR5	PCR5	
Bit Name	**POF7**	**PCR57**	**Pin Function**
Setting Value	X	0	P57 input pin
	0	1	CMOS output
	1	1	NMOS open-drain output

Legend X: Don't care.

P56 pin

Register	PMR5	PCR5	
Bit Name	**POF6**	**PCR56**	**Pin Function**
Setting Value	X	0	P56 input pin
	0	1	CMOS output
	1	1	NMOS open-drain output

Legend X: Don't care.

P55/$\overline{\text{WKP5}}$/$\overline{\text{ADTRG}}$ pin

Register	PMR5	PCR5	
Bit Name	**WKP5**	**PCR55**	**Pin Function**
Setting Value	0	0	P55 input pin
		1	P55 output pin
	1	X	$\overline{\text{WKP5}}$/$\overline{\text{ADTRG}}$ input pin

Legend X: Don't care.

P54/$\overline{\text{WKP4}}$ pin

Register	PMR5	PCR5	
Bit Name	**WKP4**	**PCR54**	**Pin Function**
Setting Value	0	0	P54 input pin
		1	P54 output pin
	1	X	$\overline{\text{WKP4}}$ input pin

Legend X: Don't care.

P53/$\overline{\text{WKP3}}$ pin

Register	PMR5	PCR5	
Bit Name	**WKP3**	**PCR53**	**Pin Function**
Setting Value	0	0	P53 input pin
		1	P53 output pin
	1	X	$\overline{\text{WKP3}}$ input pin

Legend X: Don't care.

P52/$\overline{\text{WKP2}}$ pin

Register	PMR5	PCR5	
Bit Name	**WKP2**	**PCR52**	**Pin Function**
Setting Value	0	0	P52 input pin
		1	P52 output pin
	1	X	$\overline{\text{WKP2}}$ input pin

Legend X: Don't care.

P51/$\overline{\text{WKP1}}$ pin

Register	PMR5	PCR5	
Bit Name	**WKP1**	**PCR51**	**Pin Function**
Setting Value	0	0	P51 input pin
		1	P51 output pin
	1	X	$\overline{\text{WKP1}}$ input pin

Legend X: Don't care.

P50/$\overline{\text{WKP0}}$ pin

Register	PMR5	PCR5	
Bit Name	**WKP0**	**PCR50**	**Pin Function**
Setting Value	0	0	P50 input pin
		1	P50 output pin
	1	X	$\overline{\text{WKP0}}$ input pin

Legend X: Don't care.

9.4 Port 7

Port 7 is a general I/O port also functioning as a timer V I/O pin. Each pin of the port 7 is shown in figure 9.4. The register setting of TCSRV in timer V has priority for functions of pin P76/TMOV. The pins, P75/TMCIV and P74/TMRIV, are also functioning as timer V input ports that are connected to the timer V regardless of the register setting of port 7.

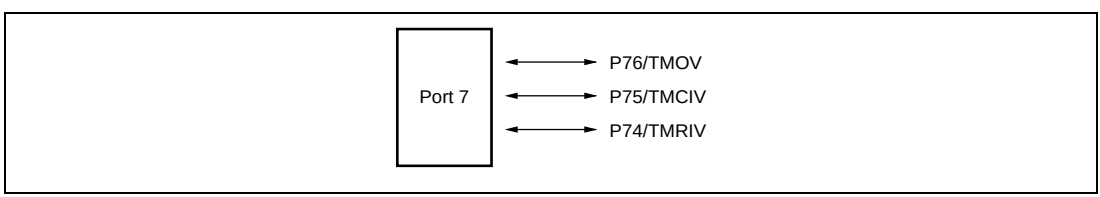

Figure 9.4 Port 7 Pin Configuration

Port 7 has the following registers.

- Port control register 7 (PCR7)
- Port data register 7 (PDR7)

9.4.1 Port Control Register 7 (PCR7)

PCR7 selects inputs/outputs in bit units for pins to be used as general I/O ports of port 7.

Bit	Bit Name	Initial Value	R/W	Description
7	—	—	—	Reserved
6	PCR76	0	W	Setting a PCR7 bit to 1 makes the corresponding pin an output port, while clearing the bit to 0 makes the pin an input port. Note that the TCSRV setting of the timer V has priority for deciding input/output direction of the P76/TMOV pin.
5	PCR75	0	W	
4	PCR74	0	W	
3	—	—	—	Reserved
2	—	—	—	
1	—	—	—	
0	—	—	—	

9.4.2 Port Data Register 7 (PDR7)

PDR7 is a general I/O port data register of port 7.

Bit	Bit Name	Initial Value	R/W	Description
7	—	1	—	Reserved This bit is always read as 1.
6	P76	0	R/W	PDR7 stores output data for port 7 pins.
5	P75	0	R/W	If PDR7 is read while PCR7 bits are set to 1, the value stored in PDR7 is read. If PDR7 is read while PCR7 bits are cleared to 0, the pin states are read regardless of the value stored in PDR7.
4	P74	0	R/W	
3	—	1	—	Reserved
2	—	1	—	These bits are always read as 1.
1	—	1	—	
0	—	1	—	

9.4.3 Pin Functions

The correspondence between the register specification and the port functions is shown below.

P76/TMOV pin

Register	TCSRV	PCR7	
Bit Name	**OS3 to OS0**	**PCR76**	**Pin Function**
Setting Value	0000	0	P76 input pin
		1	P76 output pin
	Other than the above values	X	TMOV output pin

Legend X: Don't care.

P75/TMCIV pin

Register	PCR7	
Bit Name	**PCR75**	**Pin Function**
Setting Value	0	P75 input/TMCIV input pin
	1	P75 output/TMCIV input pin

P74/TMRIV pin

Register	PCR7	
Bit Name	**PCR74**	**Pin Function**
Setting Value	0	P74 input/TMRIV input pin
	1	P74 output/TMRIV input pin

9.5 Port 8

Port 8 is a general I/O port also functioning as a timer W I/O pin. Each pin of the port 8 is shown in figure 9.5. The register setting of the timer W has priority for functions of the pins P84/FTIOD, P83/FTIOC, P82/FTIOB, and P81/FTIOA. The P80/FTCI pin also functions as a timer W input port that is connected to the timer W regardless of the register setting of port 8.

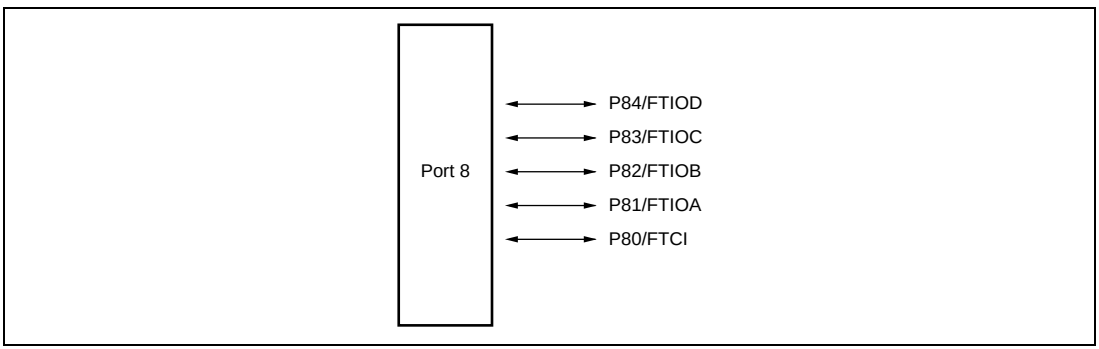

Figure 9.5 Port 8 Pin Configuration

Port 8 has the following registers.

- Port control register 8 (PCR8)
- Port data register 8 (PDR8)

9.5.1 Port Control Register 8 (PCR8)

PCR8 selects inputs/outputs in bit units for pins to be used as general I/O ports of port 8.

Bit	Bit Name	Initial Value	R/W	Description
7	—	—	—	Reserved
6	—	—	—	
5	—	—	—	
4	PCR84	0	W	When each of the port 8 pins P84 to P80 functions as an general I/O port, setting a PCR8 bit to 1 makes the corresponding pin an output port, while clearing the bit to 0 makes the pin an input port.
3	PCR83	0	W	
2	PCR82	0	W	
1	PCR81	0	W	
0	PCR80	0	W	

9.5.2 Port Data Register 8 (PDR8)

PDR8 is a general I/O port data register of port 8.

Bit	Bit Name	Initial Value	R/W	Description
7	—	0	—	Reserved
6	—	0	—	
5	—	0	—	
4	P84	0	R/W	PDR8 stores output data for port 8 pins.
3	P83	0	R/W	If PDR8 is read while PCR8 bits are set to 1, the value stored in PDR8 is read. If PDR8 is read while PCR8 bits are cleared to 0, the pin states are read regardless of the value stored in PDR8.
2	P82	0	R/W	
1	P81	0	R/W	
0	P80	0	R/W	

9.5.3 Pin Functions

The correspondence between the register specification and the port functions is shown below.

P84/FTIOD pin

Register	TIOR1			PCR8	
Bit Name	**IOD2**	**IOD1**	**IOD0**	**PCR84**	**Pin Function**
Setting Value	0	0	0	0	P84 input/FTIOD input pin
				1	P84 output/FTIOD input pin
	0	0	1	X	FTIOD output pin
	0	1	X	X	FTIOD output pin
	1	X	X	0	P84 input/FTIOD input pin
				1	P84 output/FTIOD input pin

Legend X: Don't care.

P83/FTIOC pin

Register	TIOR1			PCR8	
Bit Name	**IOC2**	**IOC1**	**IOC0**	**PCR83**	**Pin Function**
Setting Value	0	0	0	0	P83 input/FTIOC input pin
				1	P83 output/FTIOC input pin
	0	0	1	X	FTIOC output pin
	0	1	X	X	FTIOC output pin
	1	X	X	0	P83 input/FTIOC input pin
				1	P83 output/FTIOC input pin

Legend X: Don't care.

P82/FTIOB pin

Register	TIOR0			PCR8	
Bit Name	**IOB2**	**IOB1**	**IOB0**	**PCR82**	**Pin Function**
Setting Value	0	0	0	0	P82 input/FTIOB input pin
				1	P82 output/FTIOB input pin
	0	0	1	X	FTIOB output pin
	0	1	X	X	FTIOB output pin
	1	X	X	0	P82 input/FTIOB input pin
				1	P82 output/FTIOB input pin

Legend X: Don't care.

P81/FTIOA pin

Register	TIOR0			PCR8	
Bit Name	**IOA2**	**IOA1**	**IOA0**	**PCR81**	**Pin Function**
Setting Value	0	0	0	0	P81 input/FTIOA input pin
				1	P81 output/FTIOA input pin
	0	0	1	X	FTIOA output pin
	0	1	X	X	FTIOA output pin
	1	X	X	0	P81 input/FTIOA input pin
				1	P81 output/FTIOA input pin

Legend X: Don't care.

P80/FTCI pin

Register	PCR8	
Bit Name	**PCR80**	**Pin Function**
Setting Value	0	P80 input/FTCI input pin
	1	P80 output/FTCI input pin

9.6 Port B

Port B is an input port also functioning as an A/D converter analog input pin. Each pin of the port B is shown in figure 9.6.

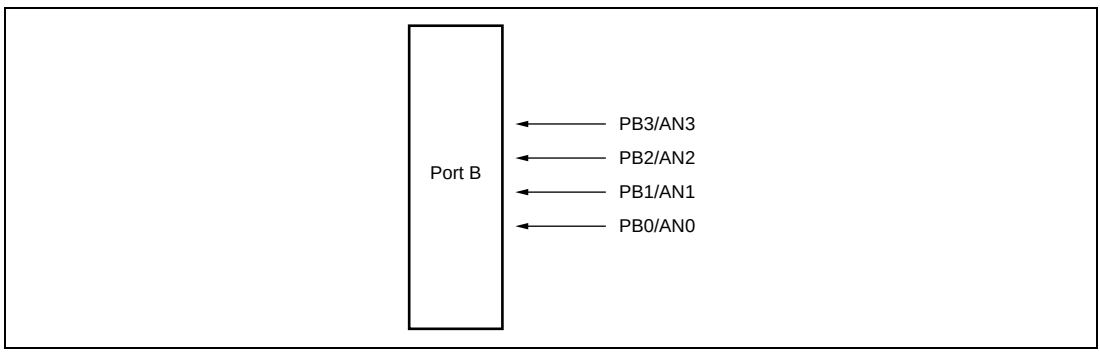

Figure 9.6 Port B Pin Configuration

Port B has the following register.

- Port data register B (PDRB)

9.6.1 Port Data Register B (PDRB)

PDRB is a general input-only port data register of port B.

Bit	Bit Name	Initial Value	R/W	Description
7	—	—	—	Reserved
6	—	—	—	
5	—	—	—	
4	—	—	—	
3	PB3	—	R	The input value of each pin is read by reading this register. However, if a port B pin is designated as an analog input channel by ADCSR in A/D converter, 0 is read.
2	PB2	—	R	
1	PB1	—	R	
0	PB0	—	R	

Section 10 Timer V

Timer V is an 8-bit timer based on an 8-bit counter. Timer V counts external events. Compare-match signals with two registers can also be used to reset the counter, request an interrupt, or output a pulse signal with an arbitrary duty cycle. Counting can be initiated by a trigger input at the TRGV pin, enabling pulse output control to be synchronized to the trigger, with an arbitrary delay from the trigger input. Figure 10.1 shows a block diagram of timer V.

10.1 Features

- Choice of seven clock signals is available.

  Choice of six internal clock sources (ø/128, ø/64, ø/32, ø/16, ø/8, ø/4) or an external clock.
- Counter can be cleared by compare match A or B, or by an external reset signal. If the count stop function is selected, the counter can be halted when cleared.
- Timer output is controlled by two independent compare match signals, enabling pulse output with an arbitrary duty cycle, PWM output, and other applications.
- Three interrupt sources: compare match A, compare match B, timer overflow
- Counting can be initiated by trigger input at the TRGV pin. The rising edge, falling edge, or both edges of the TRGV input can be selected.

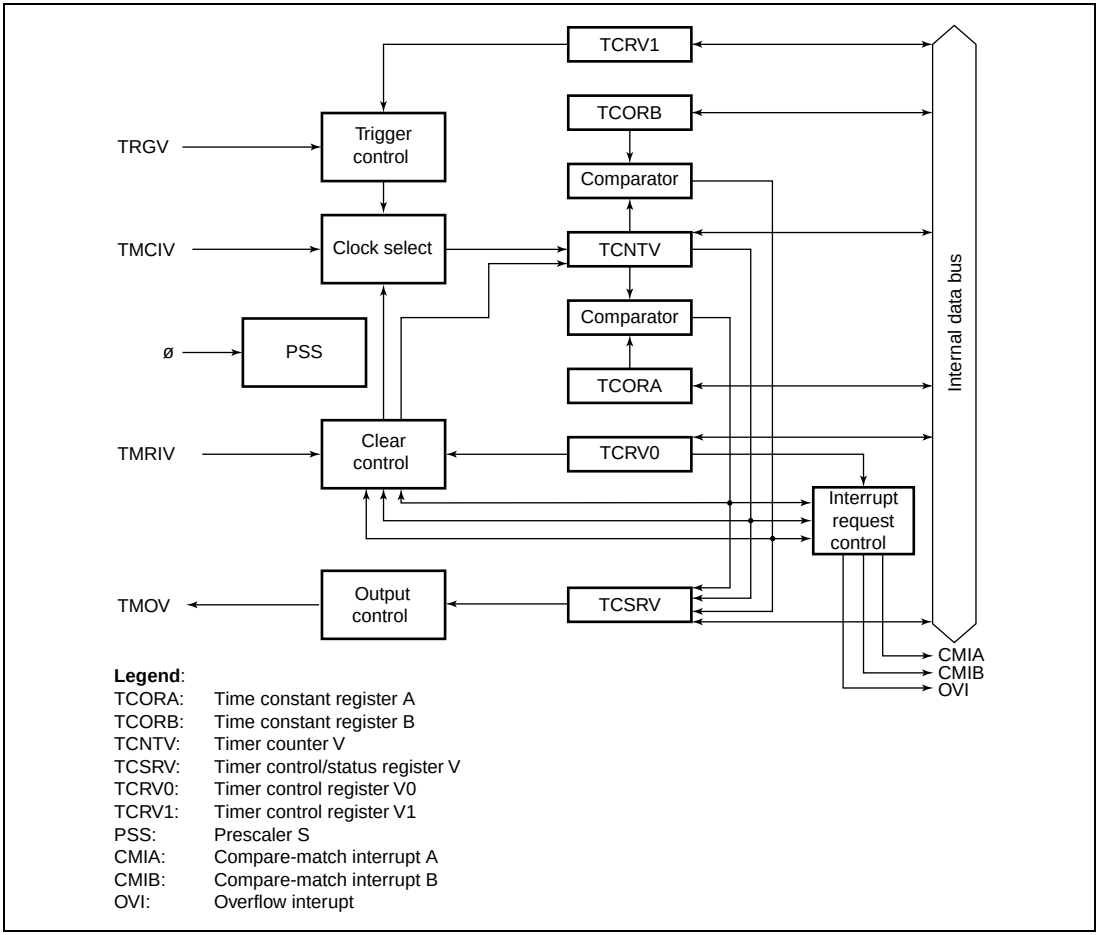

Figure 10.1 Block Diagram of Timer V

10.2 Input/Output Pins

Table 10.1 shows the timer V pin configuration.

Table 10.1 Pin Configuration

Name	Abbreviation	I/O	Function
Timer V output	TMOV	Output	Timer V waveform output
Timer V clock input	TMCIV	Input	Clock input to TCNTV
Timer V reset input	TMRIV	Input	External input to reset TCNTV
Trigger input	TRGV	Input	Trigger input to initiate counting

10.3 Register Descriptions

Time V has the following registers.

- Timer counter V (TCNTV)
- Timer constant register A (TCORA)
- Timer constant register B (TCORB)
- Timer control register V0 (TCRV0)
- Timer control/status register V (TCSRV)
- Timer control register V1 (TCRV1)

10.3.1 Timer Counter V (TCNTV)

TCNTV is an 8-bit up-counter. The clock source is selected by bits CKS2 to CKS0 in timer control register V0 (TCRV0). The TCNTV value can be read and written by the CPU at any time. TCNTV can be cleared by an external reset input signal, or by compare match A or B. The clearing signal is selected by bits CCLR1 and CCLR0 in TCRV0.

When TCNTV overflows, OVF is set to 1 in timer control/status register V (TCSRV).

TCNTV is initialized to H'00.

10.3.2 Time Constant Registers A and B (TCORA, TCORB)

TCORA and TCORB have the same function.

TCORA and TCORB are 8-bit read/write registers.

TCORA and TCNTV are compared at all times. When the TCORA and TCNTV contents match, CMFA is set to 1 in TCSRV. If CMIEA is also set to 1 in TCRV0, a CPU interrupt is requested. Note that they must not be compared during the T3 state of a TCORA write cycle.

Timer output from the TMOV pin can be controlled by the identifying signal (compare match A) and the settings of bits OS3 to OS0 in TCSRV.

TCORA and TCORB are initialized to H'FF.

10.3.3 Timer Control Register V0 (TCRV0)

TCRV0 selects the input clock signals of TCNTV, specifies the clearing conditions of TCNTV, and controls each interrupt request.

Bit	Bit Name	Initial Value	R/W	Description
7	CMIEB	0	R/W	Compare Match Interrupt Enable B When this bit is set to 1, interrupt request from the CMFB bit in TCSRV is enabled.
6	CMIEA	0	R/W	Compare Match Interrupt Enable A When this bit is set to 1, interrupt request from the CMFA bit in TCSRV is enabled.
5	OVIE	0	R/W	Timer Overflow Interrupt Enable When this bit is set to 1, interrupt request from the OVF bit in TCSRV is enabled.
4	CCLR1	0	R/W	Counter Clear 1 and 0
3	CCLR0	0	R/W	These bits specify the clearing conditions of TCNTV. 00: Clearing is disabled 01: Cleared by compare match A 10: Cleared by compare match B 11: Cleared on the rising edge of the TMRIV pin. The operation of TCNTV after clearing depends on TRGE in TCRV1.
2	CKS2	0	R/W	Clock Select 2 to 0
1	CKS1	0	R/W	These bits select clock signals to input to TCNTV and the counting condition in combination with ICKS0 in TCRV1.
0	CKS0	0	R/W	Refer to table 10.2.

Table 10.2 Clock Signals to Input to TCNTV and Counting Conditions

TCRV0			TCRV1	
Bit 2	**Bit 1**	**Bit 0**	**Bit 0**	
CKS2	**CKS1**	**CKS0**	**ICKS0**	**Description**
0	0	0	—	Clock input prohibited
		1	0	Internal clock: counts on $\phi/4$, falling edge
			1	Internal clock: counts on $\phi/8$, falling edge
	1	0	0	Internal clock: counts on $\phi/16$, falling edge
			1	Internal clock: counts on $\phi/32$, falling edge
		1	0	Internal clock: counts on $\phi/64$, falling edge
			1	Internal clock: counts on $\phi/128$, falling edge
1	0	0	—	Clock input prohibited
		1	—	External clock: counts on rising edge
	1	0	—	External clock: counts on falling edge
		1	—	External clock: counts on rising and falling edge

10.3.4 Timer Control/Status Register V (TCSRV)

TCSRV indicates the status flag and controls outputs by using a compare match.

Bit	Bit Name	Initial Value	R/W	Description
7	CMFB	0	R/W	Compare Match Flag B Setting condition: When the TCNTV value matches the TCORB value Clearing condition: After reading CMFB = 1, cleared by writing 0 to CMFB
6	CMFA	0	R/W	Compare Match Flag A Setting condition: When the TCNTV value matches the TCORA value Clearing condition: After reading CMFA = 1, cleared by writing 0 to CMFA
5	OVF	0	R/W	Timer Overflow Flag Setting condition: When TCNTV overflows from H'FF to H'00 Clearing condition: After reading OVF = 1, cleared by writing 0 to OVF
4	—	1	—	Reserved This bit is always read as 1.
3	OS3	0	R/W	Output Select 3 and 2
2	OS2	0	R/W	These bits select an output method for the TOMV pin by the compare match of TCORB and TCNTV. 00: No change 01: 0 output 10: 1 output 11: Output toggles
1	OS1	0	R/W	Output Select 1 and 0
0	OS0	0	R/W	These bits select an output method for the TOMV pin by the compare match of TCORA and TCNTV. 00: No change 01: 0 output 10: 1 output 11: Output toggles

OS3 and OS2 select the output level for compare match B. OS1 and OS0 select the output level for compare match A. The two output levels can be controlled independently. After a reset, the timer output is 0 until the first compare match.

10.3.5 Timer Control Register V1 (TCRV1)

TCRV1 selects the edge at the TRGV pin, enables TRGV input, and selects the clock input to TCNTV.

Bit	Bit Name	Initial Value	R/W	Description
7 to 5	—	All 1	—	Reserved These bits are always read as 1.
4 3	TVEG1 TVEG0	0 0	R/W R/W	TRGV Input Edge Select These bits select the TRGV input edge. 00: TRGV trigger input is prohibited 01: Rising edge is selected 10: Falling edge is selected 11: Rising and falling edges are both selected
2	TRGE	0	R/W	TCNTV starts counting up by the input of the edge which is selected by TVEG1 and TVEG0. 0: Disables starting counting-up TCNTV by the input of the TRGV pin and halting counting-up TCNTV when TCNTV is cleared by a compare match. 1: Enables starting counting-up TCNTV by the input of the TRGV pin and halting counting-up TCNTV when TCNTV is cleared by a compare match.
1	—	1	—	Reserved This bit is always read as 1.
0	ICKS0	0	R/W	Internal Clock Select 0 This bit selects clock signals to input to TCNTV in combination with CKS2 to CKS0 in TCRV0. Refer to table 10.2.

10.4 Operation

10.4.1 Timer V Operation

1. According to table 10.2, six internal/external clock signals output by prescaler S can be selected as the timer V operating clock signals. When the operating clock signal is selected, TCNTV starts counting-up. Figure 10.2 shows the count timing with an internal clock signal selected, and figure 10.3 shows the count timing with both edges of an external clock signal selected.
2. When TCNTV overflows (changes from H'FF to H'00), the overflow flag (OVF) in TCRV0 will be set. The timing at this time is shown in figure 10.4. An interrupt request is sent to the CPU when OVIE in TCRV0 is 1.
3. TCNTV is constantly compared with TCORA and TCORB. Compare match flag A or B (CMFA or CMFB) is set to 1 when TCNTV matches TCORA or TCORB, respectively. The compare-match signal is generated in the last state in which the values match. Figure 10.5 shows the timing. An interrupt request is generated for the CPU when CMIEA or CMIEB in TCRV0 is 1.
4. When a compare match A or B is generated, the TMOV responds with the output value selected by bits OS3 to OS0 in TCSRV. Figure 10.6 shows the timing when the output is toggled by compare match A.
5. When CCLR1 or CCLR0 in TCRV0 is 01 or 10, TCNTV can be cleared by the corresponding compare match. Figure 10.7 shows the timing.
6. When CCLR1 or CCLR0 in TCRV0 is 11, TCNTV can be cleared by the rising edge of the input of TMRIV pin. A TMRIV input pulse-width of at least 1.5 system clocks is necessary. Figure 10.8 shows the timing.
7. When a counter-clearing source is generated with TRGE in TCRV1 set to 1, the counting-up is halted as soon as TCNTV is cleared. TCNTV resumes counting-up when the edge selected by TVEG1 or TVEG0 in TCRV1 is input from the TGRV pin.

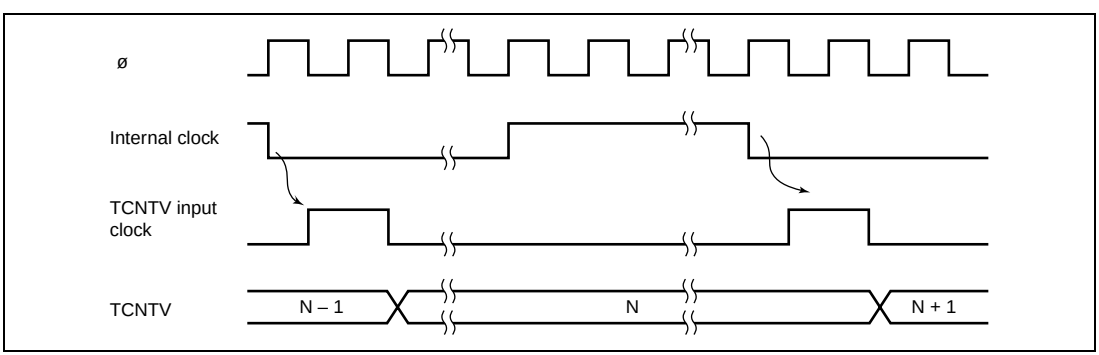

Figure 10.2 Increment Timing with Internal Clock

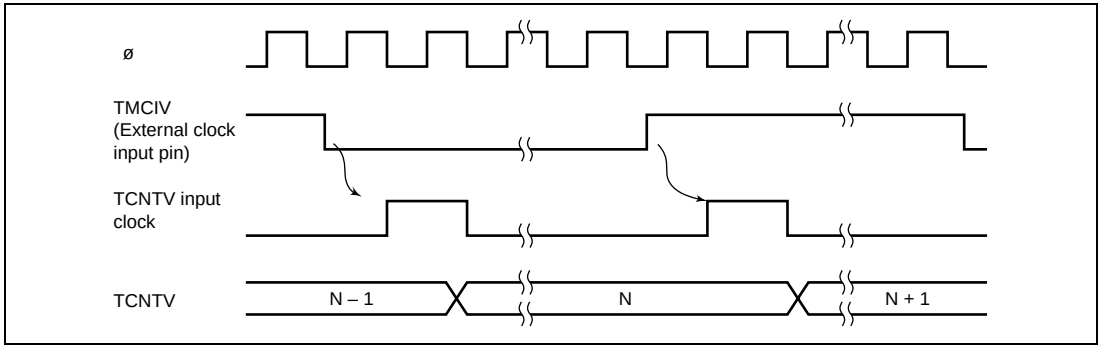

Figure 10.3 Increment Timing with External Clock

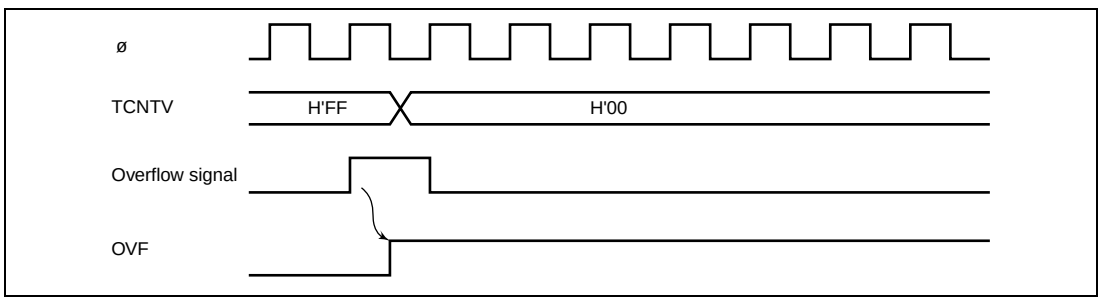

Figure 10.4 OVF Set Timing

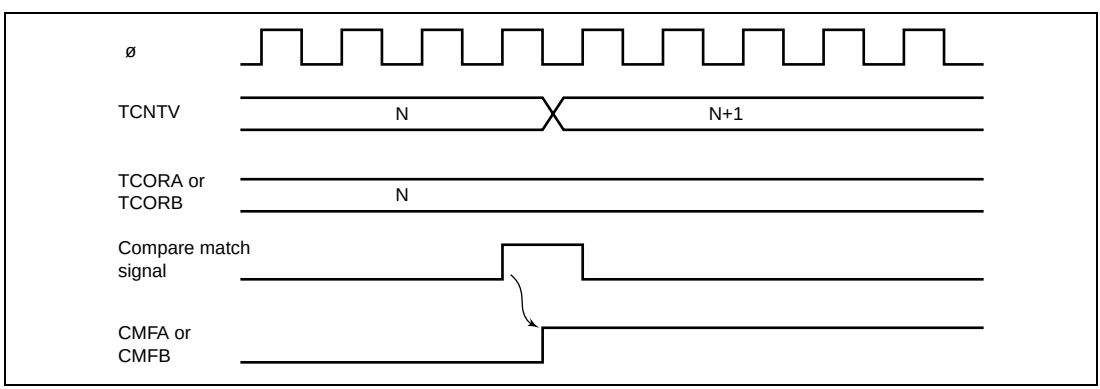

Figure 10.5 CMFA and CMFB Set Timing

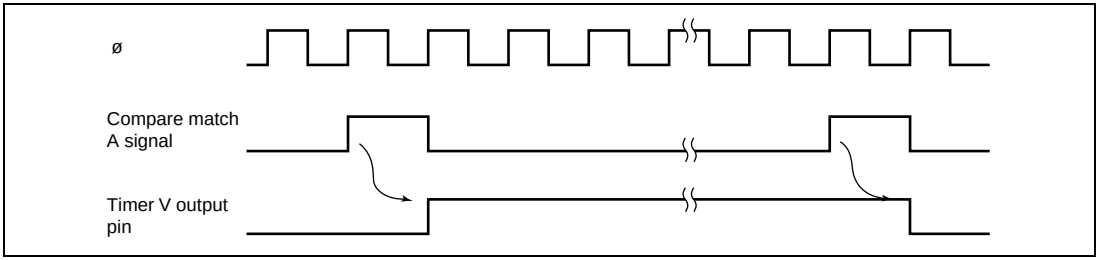

Figure 10.6 TMOV Output Timing

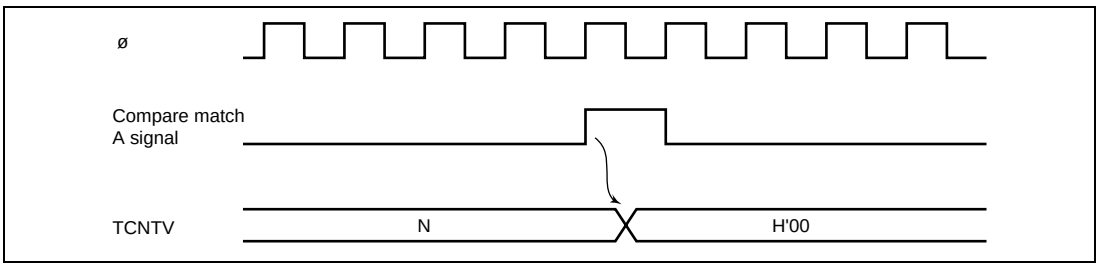

Figure 10.7 Clear Timing by Compare Match

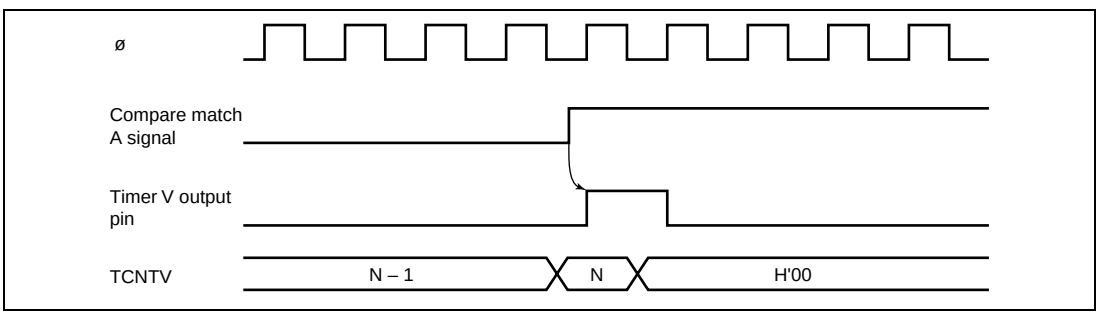

Figure 10.8 Clear Timing by TMRIV Input

10.5 Timer V Application Examples

10.5.1 Pulse Output with Arbitrary Duty Cycle

Figure 10.9 shows an example of output of pulses with an arbitrary duty cycle.

1. Set bits CCLR1 and CCLR0 in TCRV0 so that TCNTV will be cleared by compare match with TCORA.
2. Set bits OS3 to OS0 in TCSRV so that the output will go to 1 at compare match with TCORA and to 0 at compare match with TCORB.
3. Set bits CKS2 to CKS0 in TCRV0 and bit ICKS0 in TCRV1 to select the desired clock source.
4. With these settings, a waveform is output without further software intervention, with a period determined by TCORA and a pulse width determined by TCORB.

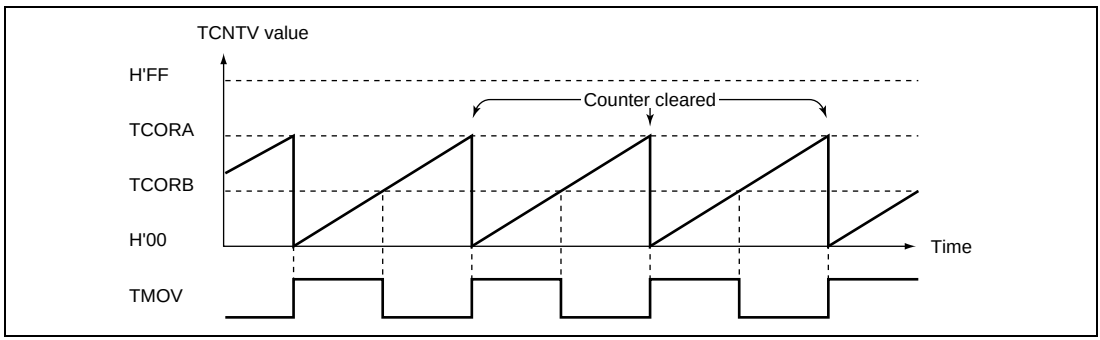

Figure 10.9 Pulse Output Example

10.5.2 Pulse Output with Arbitrary Pulse Width and Delay from TRGV Input

The trigger function can be used to output a pulse with an arbitrary pulse width at an arbitrary delay from the TRGV input, as shown in figure 10.10. To set up this output:

1. Set bits CCLR1 and CCLR0 in TCRV0 so that TCNTV will be cleared by compare match with TCORB.
2. Set bits OS3 to OS0 in TCSRV so that the output will go to 1 at compare match with TCORA and to 0 at compare match with TCORB.
3. Set bits TVEG1 and TVEG0 in TCRV1 and set TRGE to select the falling edge of the TRGV input.
4. Set bits CKS2 to CKS0 in TCRV0 and bit ICKS0 in TCRV1 to select the desired clock source.
5. After these settings, a pulse waveform will be output without further software intervention, with a delay determined by TCORA from the TRGV input, and a pulse width determined by (TCORB – TCORA).

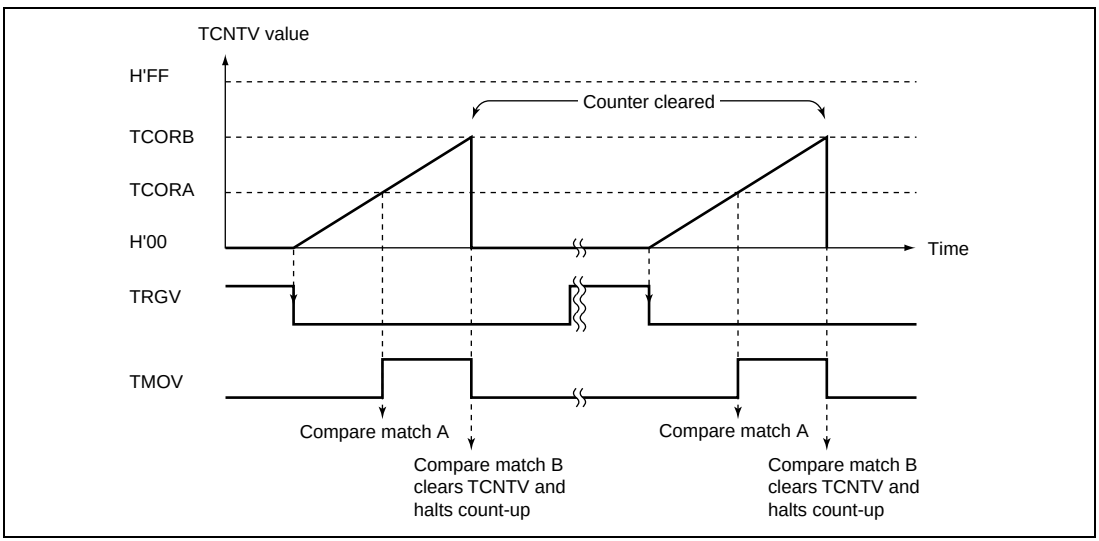

Figure 10.10 Example of Pulse Output Synchronized to TRGV Input

10.6 Usage Notes

The following types of contention or operation can occur in timer V operation.

1. Writing to registers is performed in the T3 state of a TCNTV write cycle. If a TCNTV clear signal is generated in the T3 state of a TCNTV write cycle, as shown in figure 10.11, clearing takes precedence and the write to the counter is not carried out. If counting-up is generated in the T3 state of a TCNTV write cycle, writing takes precedence.
2. If a compare match is generated in the T3 state of a TCORA or TCORB write cycle, the write to TCORA or TCORB takes precedence and the compare match signal is inhibited. Figure 10.12 shows the timing.
3. If compare matches A and B occur simultaneously, any conflict between the output selections for compare match A and compare match B is resolved by the following priority: toggle output > output 1 > output 0.
4. Depending on the timing, TCNTV may be incremented by a switch between different internal clock sources. When TCNTV is internally clocked, an increment pulse is generated from the falling edge of an internal clock signal, that is divided system clock (ϕ). Therefore, as shown in figure 10.3 the switch is from a high clock signal to a low clock signal, the switchover is seen as a falling edge, causing TCNTV to increment. TCNTV can also be incremented by a switch between internal and external clocks.

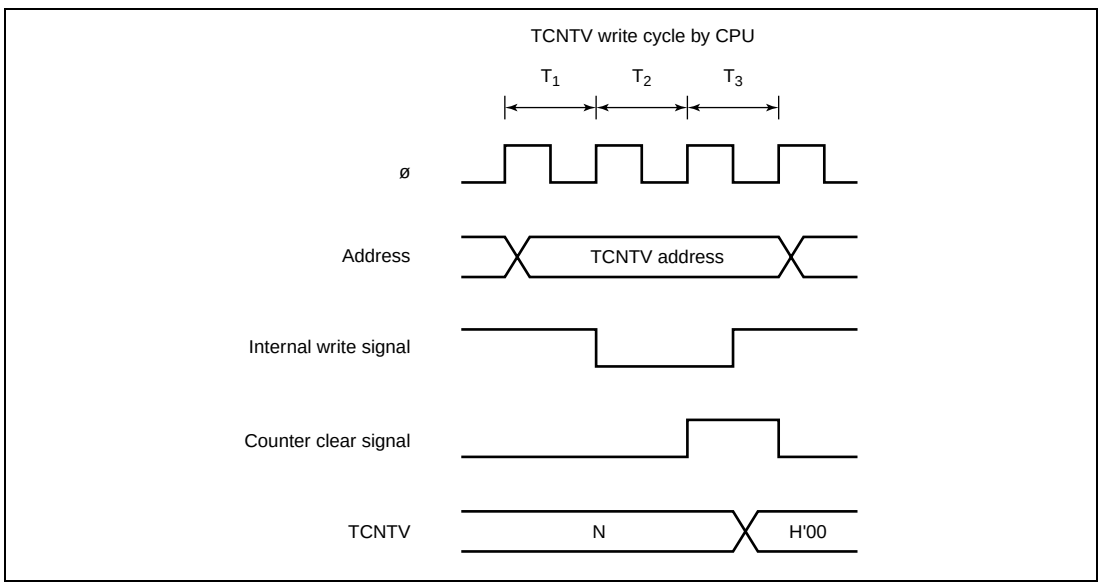

Figure 10.11 Contention between TCNTV Write and Clear

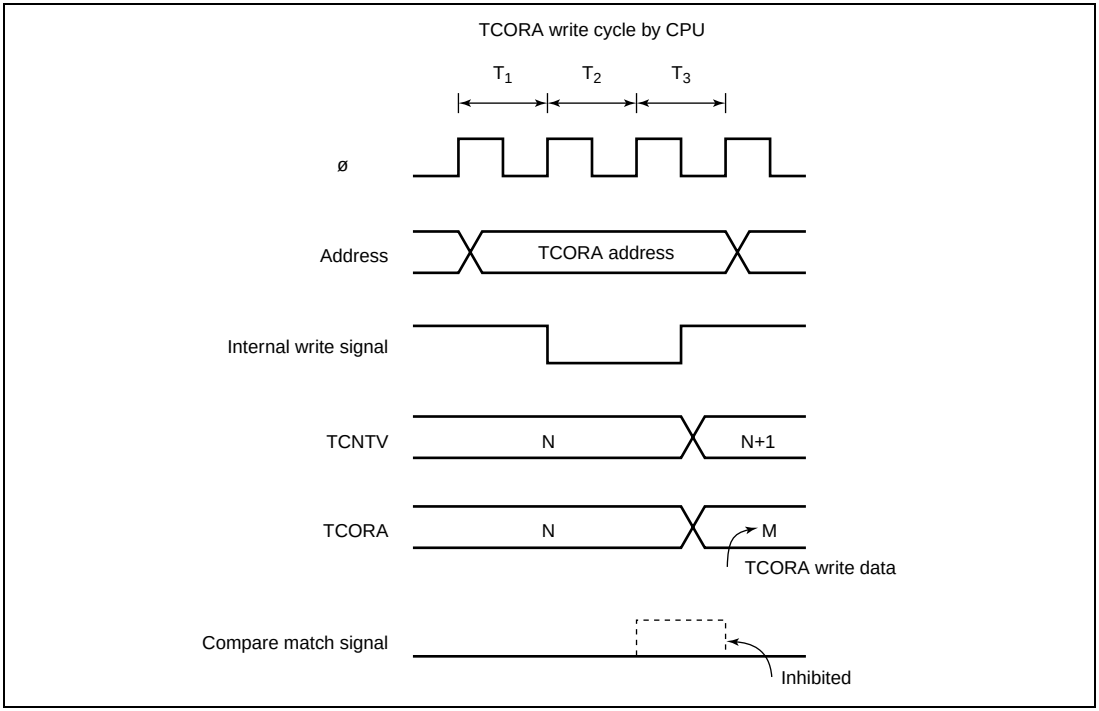

Figure 10.12 Contention between TCORA Write and Compare Match

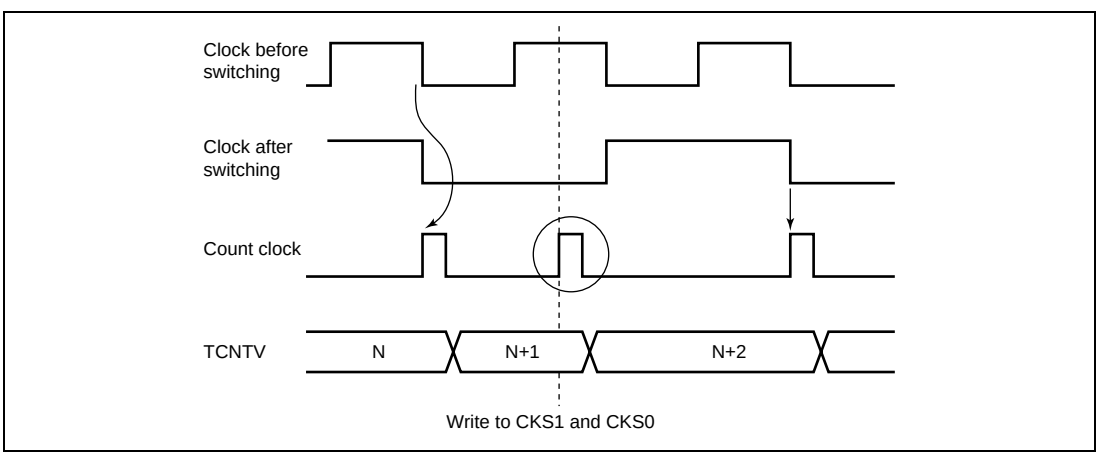

Figure 10.13 Internal Clock Switching and TCNTV Operation

Section 11 Timer W

The timer W has a 16-bit timer having output compare and input capture functions. The timer W can count external events and output pulses with an arbitrary duty cycle by compare match between the timer counter and four general registers. Thus, it can be applied to various systems.

11.1 Features

- Selection of five counter clock sources: four internal clocks (ϕ, ϕ/2, ϕ/4, and ϕ/8) and an external clock (external events can be counted)
- Capability to process up to four pulse outputs or four pulse inputs
- Four general registers:
  - Independently assignable output compare or input capture functions
  - Usable as two pairs of registers; one register of each pair operates as a buffer for the output compare or input capture register
- Four selectable operating modes :
  - Waveform output by compare match
    Selection of 0 output, 1 output, or toggle output
  - Input capture function
    Rising edge, falling edge, or both edges
  - Counter clearing function
    Counters can be cleared by compare match
  - PWM mode
    Up to three-phase PWM output can be provided with desired duty ratio.
- Any initial timer output value can be set
- Five interrupt sources
  Four compare match/input capture interrupts and an overflow interrupt.

Table 11.1 summarizes the timer W functions, and figure 11.1 shows a block diagram of the timer W.

Table 11.1 Timer W Functions

Item		Counter	Input/Output Pins FTIOA	FTIOB	FTIOC	FTIOD
Count clock		Internal clocks: φ, φ/2, φ/4, φ/8 External clock: FTCI				
General registers (output compare/input capture registers)		Period specified in GRA	GRA	GRB	GRC (buffer register for GRA in buffer mode)	GRD (buffer register for GRB in buffer mode)
Counter clearing function		GRA compare match	GRA compare match	—	—	—
Initial output value setting function		—	Yes	Yes	Yes	Yes
Buffer function		—	Yes	Yes	—	—
Compare match output	0	—	Yes	Yes	Yes	Yes
	1	—	Yes	Yes	Yes	Yes
	Toggle	—	Yes	Yes	Yes	Yes
Input capture function		—	Yes	Yes	Yes	Yes
PWM mode		—	—	Yes	Yes	Yes
Interrupt sources		Overflow	Compare match/input capture	Compare match/input capture	Compare match/input capture	Compare match/input capture

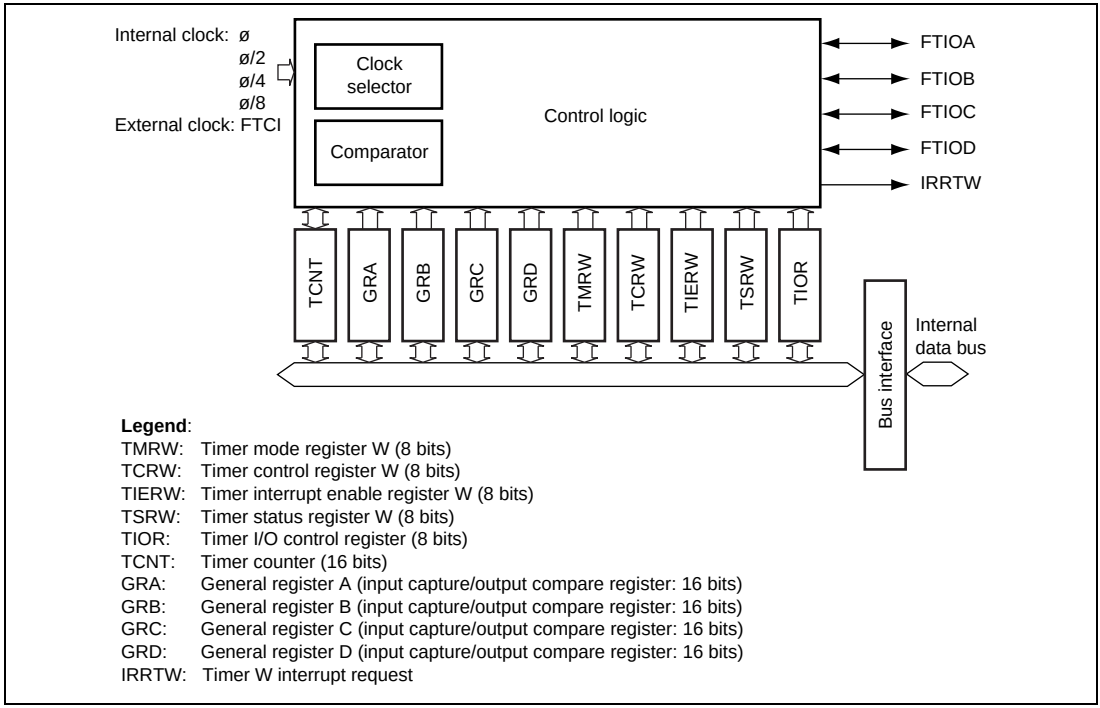

Figure 11.1 Timer W Block Diagram

11.2 Input/Output Pins

Table 11.2 summarizes the timer W pins.

Table 11.2 Pin Configuration

Name	Abbreviation	Input/Output	Function
External clock input	FTCI	Input	External clock input pin
Input capture/output compare A	FTIOA	Input/output	Output pin for GRA output compare or input pin for GRA input capture
Input capture/output compare B	FTIOB	Input/output	Output pin for GRB output compare, input pin for GRB input capture, or PWM output pin in PWM mode
Input capture/output compare C	FTIOC	Input/output	Output pin for GRC output compare, input pin for GRC input capture, or PWM output pin in PWM mode
Input capture/output compare D	FTIOD	Input/output	Output pin for GRD output compare, input pin for GRD input capture, or PWM output pin in PWM mode

11.3 Register Descriptions

The timer W has the following registers.

- Timer mode register W (TMRW)
- Timer control register W (TCRW)
- Timer interrupt enable register W (TIERW)
- Timer status register W (TSRW)
- Timer I/O control register 0 (TIOR0)
- Timer I/O control register 1 (TIOR1)
- Timer counter (TCNT)
- General register A (GRA)
- General register B (GRB)
- General register C (GRC)
- General register D (GRD)

11.3.1 Timer Mode Register W (TMRW)

TMRW selects the general register functions and the timer output mode.

Bit	Bit Name	Initial Value	R/W	Description
7	CTS	0	R/W	Counter Start The counter operation is halted when this bit is 0, while it can be performed when this bit is 1.
6	—	1	—	Reserved This bit is always read as 1.
5	BUFEB	0	R/W	Buffer Operation B Selects the GRD function. 0: GRD operates as an input capture/output compare register 1: GRD operates as the buffer register for GRB
4	BUFEA	0	R/W	Buffer Operation A Selects the GRC function. 0: GRC operates as an input capture/output compare register 1: GRC operates as the buffer register for GRA
3	—	1	—	Reserved This bit is always read as 1.
2	PWMD	0	R/W	PWM Mode D Selects the output mode of the FTIOD pin. 0: FTIOD operates normally (output compare output) 1: PWM output
1	PWMC	0	R/W	PWM Mode C Selects the output mode of the FTIOC pin. 0: FTIOC operates normally (output compare output) 1: PWM output
0	PWMB	0	R/W	PWM Mode B Selects the output mode of the FTIOB pin. 0: FTIOB operates normally (output compare output) 1: PWM output

11.3.2 Timer Control Register W (TCRW)

TCRW selects the timer counter clock source, selects a clearing condition, and specifies the timer output levels.

Bit	Bit Name	Initial Value	R/W	Description
7	CCLR	0	R/W	Counter Clear The TCNT value is cleared by compare match A when this bit is 1. When it is 0, TCNT operates as a free-running counter.
6	CKS2	0	R/W	Clock Select 2 to 0
5	CKS1	0	R/W	Select the TCNT clock source.
4	CKS0	0	R/W	000: Internal clock: counts on ϕ 001: Internal clock: counts on $\phi/2$ 010: Internal clock: counts on $\phi/4$ 011: Internal clock: counts on $\phi/8$ 1XX: Counts on rising edges of the external event (FTCI) When the internal clock source (ϕ) is selected, subclock sources are counted in subactive and subsleep modes.
3	TOD	0	R/W	Timer Output Level Setting D 0: Output value is 0* 1: Output value is 1*
2	TOC	0	R/W	Timer Output Level Setting C 0: Output value is 0* 1: Output value is 1*
1	TOB	0	R/W	Timer Output Level Setting B 0: Output value is 0* 1: Output value is 1*
0	TOA	0	R/W	Timer Output Level Setting A 0: Output value is 0* 1: Output value is 1*

Legend X: Don't care.

Note: * The change of the setting is immediately reflected in the output value.

11.3.3 Timer Interrupt Enable Register W (TIERW)

TIERW controls the timer W interrupt request.

Bit	Bit Name	Initial Value	R/W	Description
7	OVIE	0	R/W	Timer Overflow Interrupt Enable When this bit is set to 1, FOVI interrupt requested by OVF flag in TSRW is enabled.
6	—	1	—	Reserved
5	—	1	—	These bits are always read as 1.
4	—	1	—	
3	IMIED	0	R/W	Input Capture/Compare Match Interrupt Enable D When this bit is set to 1, IMID interrupt requested by IMFD flag in TSRW is enabled.
2	IMIEC	0	R/W	Input Capture/Compare Match Interrupt Enable C When this bit is set to 1, IMIC interrupt requested by IMFC flag in TSRW is enabled.
1	IMIEB	0	R/W	Input Capture/Compare Match Interrupt Enable B When this bit is set to 1, IMIB interrupt requested by IMFB flag in TSRW is enabled.
0	IMIEA	0	R/W	Input Capture/Compare Match Interrupt Enable A When this bit is set to 1, IMIA interrupt requested by IMFA flag in TSRW is enabled.

11.3.4 Timer Status Register W (TSRW)

TSRW shows the status of interrupt requests.

Bit	Bit Name	Initial Value	R/W	Description
7	OVF	0	R/W	Timer Overflow Flag [Setting condition] When TCNT overflows from H'FFFF to H'0000 [Clearing condition] Read OVF when OVF = 1, then write 0 in OVF
6	—	1	—	Reserved
5	—	1	—	These bits are always read as 1.
4	—	1	—	

Bit	Bit Name	Initial Value	R/W	Description
3	IMFD	0	R/W	Input Capture/Compare Match Flag D [Setting conditions] • TCNT = GRD when GRD functions as an output compare register • The TCNT value is transferred to GRD by an input capture signal when GRD functions as an input capture register [Clearing condition] Read IMFD when IMFD = 1, then write 0 in IMFD
2	IMFC	0	R/W	Input Capture/Compare Match Flag C [Setting conditions] • TCNT = GRC when GRC functions as an output compare register • The TCNT value is transferred to GRC by an input capture signal when GRC functions as an input capture register [Clearing condition] Read IMFC when IMFC = 1, then write 0 in IMFC
1	IMFB	0	R/W	Input Capture/Compare Match Flag B [Setting conditions] • TCNT = GRB when GRB functions as an output compare register • The TCNT value is transferred to GRB by an input capture signal when GRB functions as an input capture register [Clearing condition] Read IMFB when IMFB = 1, then write 0 in IMFB
0	IMFA	0	R/W	Input Capture/Compare Match Flag A [Setting conditions] • TCNT = GRA when GRA functions as an output compare register • The TCNT value is transferred to GRA by an input capture signal when GRA functions as an input capture register [Clearing condition] Read IMFA when IMFA = 1, then write 0 in IMFA

11.3.5 Timer I/O Control Register 0 (TIOR0)

TIOR0 selects the functions of GRA and GRB, and specifies the functions of the FTIOA and FTIOB pins.

Bit	Bit Name	Initial Value	R/W	Description
7	—	1	—	Reserved This bit is always read as 1.
6	IOB2	0	R/W	I/O Control B2 Selects the GRB function. 0: GRB functions as an output compare register 1: GRB functions as an input capture register
5	IOB1	0	R/W	I/O Control B1 and B0
4	IOB0	0	R/W	When IOB2 = 0, 00: No output at compare match 01: 0 output to the FTIOB pin at GRB compare match 10: 1 output to the FTIOB pin at GRB compare match 11: Output toggles to the FTIOB pin at GRB compare match When IOB2 = 1, 00: Input capture at rising edge at the FTIOB pin 01: Input capture at falling edge at the FTIOB pin 1X: Input capture at rising and falling edges of the FTIOB pin
3	—	1	—	Reserved This bit is always read as 1.
2	IOA2	0	R/W	I/O Control A2 Selects the GRA function. 0: GRA functions as an output compare register 1: GRA functions as an input capture register
1	IOA1	0	R/W	I/O Control A1 and A0
0	IOA0	0	R/W	When IOA2 = 0, 00: No output at compare match 01: 0 output to the FTIOA pin at GRA compare match 10: 1 output to the FTIOA pin at GRA compare match 11: Output toggles to the FTIOA pin at GRA compare match When IOA2 = 1, 00: Input capture at rising edge of the FTIOA pin 01: Input capture at falling edge of the FTIOA pin 1X: Input capture at rising and falling edges of the FTIOA pin

Legend X: Don't care.

11.3.6 Timer I/O Control Register 1 (TIOR1)

TIOR1 selects the functions of GRC and GRD, and specifies the functions of the FTIOC and FTIOD pins.

Bit	Bit Name	Initial Value	R/W	Description
7	—	1	—	Reserved This bit is always read as 1.
6	IOD2	0	R/W	I/O Control D2 Selects the GRD function. 0: GRD functions as an output compare register 1: GRD functions as an input capture register
5	IOD1	0	R/W	I/O Control D1 and D0
4	IOD0	0	R/W	When IOD2 = 0, 00: No output at compare match 01: 0 output to the FTIOD pin at GRD compare match 10: 1 output to the FTIOD pin at GRD compare match 11: Output toggles to the FTIOD pin at GRD compare match When IOD2 = 1, 00: Input capture at rising edge at the FTIOD pin 01: Input capture at falling edge at the FTIOD pin 1X: Input capture at rising and falling edges at the FTIOD pin
3	—	1	—	Reserved This bit is always read as 1.
2	IOC2	0	R/W	I/O Control C2 Selects the GRC function. 0: GRC functions as an output compare register 1: GRC functions as an input capture register
1	IOC1	0	R/W	I/O Control C1 and C0
0	IOC0	0	R/W	When IOC2 = 0, 00: No output at compare match 01: 0 output to the FTIOC pin at GRC compare match 10: 1 output to the FTIOC pin at GRC compare match 11: Output toggles to the FTIOC pin at GRC compare match When IOC2 = 1, 00: Input capture to GRC at rising edge of the FTIOC pin 01: Input capture to GRC at falling edge of the FTIOC pin 1X: Input capture to GRC at rising and falling edges of the FTIOC pin

Legend X: Don't care.

11.3.7 Timer Counter (TCNT)

TCNT is a 16-bit readable/writable up-counter. The clock source is selected by bits CKS2 to CKS0 in TCRW. TCNT can be cleared to H'0000 through a compare match with GRA by setting the CCLR in TCRW to 1. When TCNT overflows (changes from H'FFFF to H'0000), the OVF flag in TSRW is set to 1. If OVIE in TIERW is set to 1 at this time, an interrupt request is generated. TCNT must always be read or written in 16-bit units; 8-bit access is not allowed. TCNT is initialized to H'0000 by a reset.

11.3.8 General Registers A to D (GRA to GRD)

Each general register is a 16-bit readable/writable register that can function as either an output-compare register or an input-capture register. The function is selected by settings in TIOR0 and TIOR1.

When a general register is used as an input-compare register, its value is constantly compared with the TCNT value. When the two values match (a compare match), the corresponding flag (IMFA, IMFB, IMFC, or IMFD) in TSRW is set to 1. An interrupt request is generated at this time, when IMIEA, IMIEB, IMIEC, or IMIED is set to 1. Compare match output can be selected in TIOR.

When a general register is used as an input-capture register, an external input-capture signal is detected and the current TCNT value is stored in the general register. The corresponding flag (IMFA, IMFB, IMFC, or IMFD) in TSRW is set to 1. If the corresponding interrupt-enable bit (IMIEA, IMIEB, IMIEC, or IMIED) in TSRW is set to 1 at this time, an interrupt request is generated. The edge of the input-capture signal is selected in TIOR.

GRC and GRD can be used as buffer registers of GRA and GRB, respectively, by setting BUFEA and BUFEB in TMRW.

For example, when GRA is set as an output-compare register and GRC is set as the buffer register for GRA, the value in the buffer register GRC is sent to GRA whenever compare match A is generated.

When GRA is set as an input-capture register and GRC is set as the buffer register for GRA, the value in TCNT is transferred to GRA and the value in the buffer register GRC is transferred to GRA whenever an input capture is generated.

GRA to GRD must be written or read in 16-bit units; 8-bit access is not allowed. GRA to GRD are initialized to H'FFFF by a reset.

11.4 Operation

The timer W has the following operating modes.

- Normal Operation
- PWM Operation

11.4.1 Normal Operation

TCNT performs free-running or periodic counting operations. After a reset, TCNT is set as a free-running counter. When the CST bit in TMRW is set to 1, TCNT starts incrementing the count. When the count overflows from H'FFFF to H'0000, the OVF flag in TSRW is set to 1. If the OVIE in TIERW is set to 1, an interrupt request is generated. Figure 11.2 shows free-running counting.

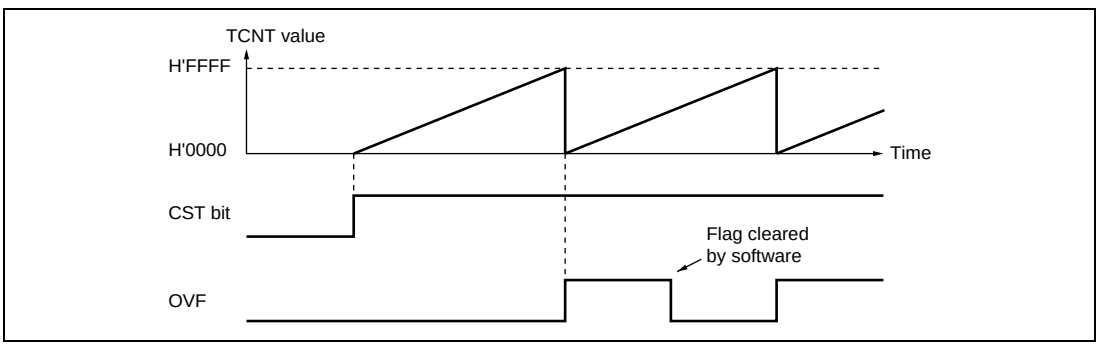

Figure 11.2 Free-Running Counter Operation

Periodic counting operation can be performed when GRA is set as an output compare register and bit CCLR in TCRW is set to 1. When the count matches GRA, TCNT is cleared to H'0000, the IMFA flag in TSRW is set to 1. If the corresponding IMIEA bit in TIERW is set to 1, an interrupt request is generated. TCNT continues counting from H'0000. Figure 11.3 shows periodic counting.

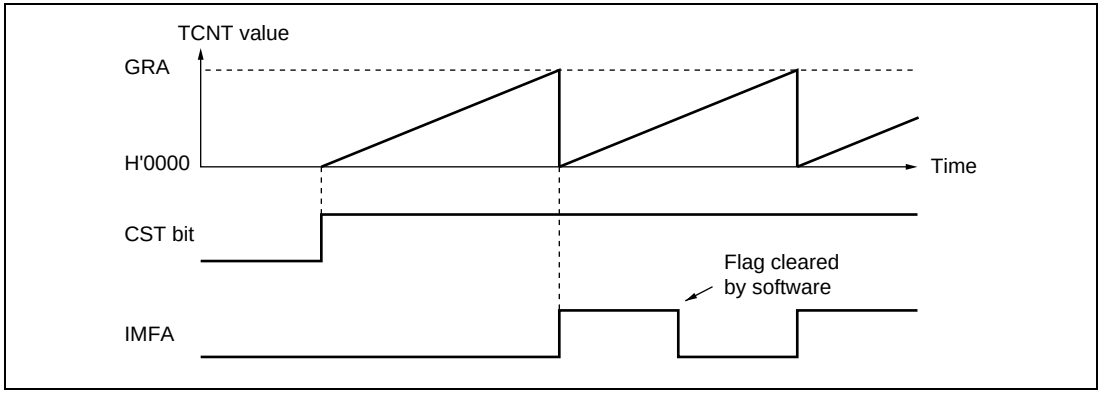

Figure 11.3 Periodic Counter Operation

By setting a general register as an output compare register, compare match A, B, C, or D can cause the output at the FTIOA, FTIOB, FTIOC, or FTIOD pin to output 0, output 1, or toggle. Figure 11.4 shows an example of 0 and 1 output when TCNT operates as a free-running counter, 1 output is selected for compare match A, and 0 output is selected for compare match B. When signal is already at the selected output level, the signal level does not change at compare match.

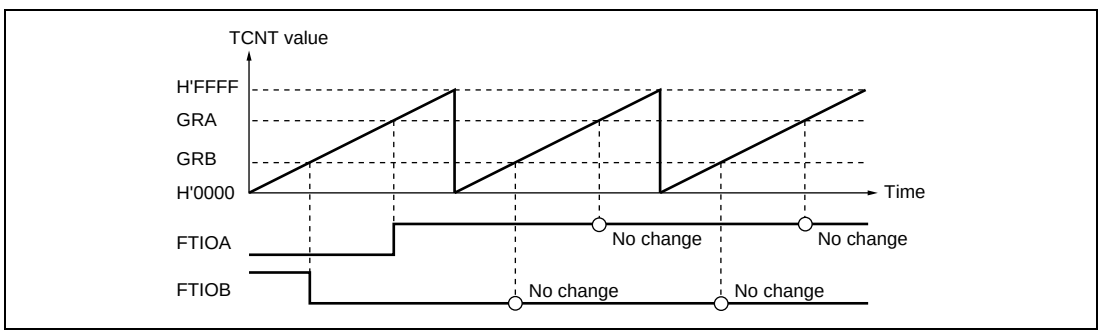

Figure 11.4 0 and 1 Output Example (TOA = 0, TOB = 1)

Figure 11.5 shows an example of toggle output when TCNT operates as a free-running counter, and toggle output is selected for both compare match A and B.

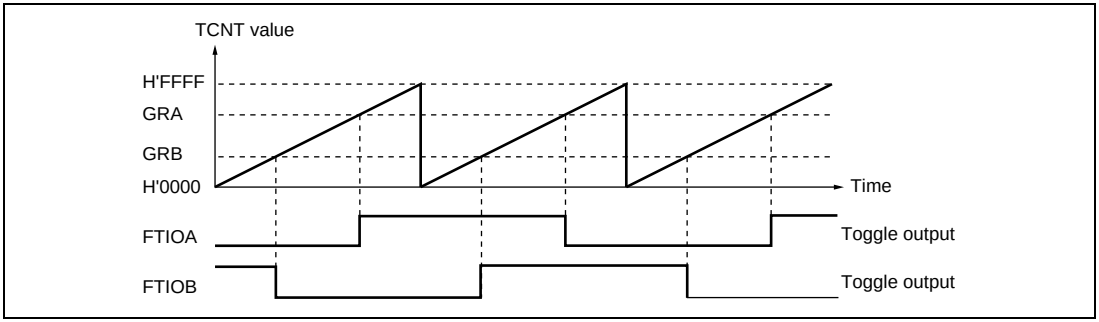

Figure 11.5 Toggle Output Example (TOA = 0, TOB = 1)

Figure 11.6 shows another example of toggle output when TCNT operates as a periodic counter, cleared by compare match A. Toggle output is selected for both compare match A and B.

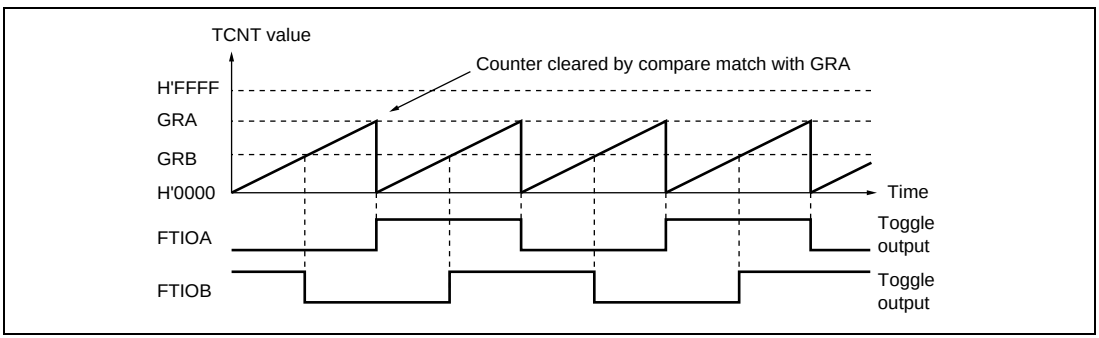

Figure 11.6 Toggle Output Example (TOA = 0, TOB = 1)

The TCNT value can be captured into a general register (GRA, GRB, GRC, or GRD) when a signal level changes at an input-capture pin (FTIOA, FTIOB, FTIOC, or FTIOD). Capture can take place on the rising edge, falling edge, or both edges. By using the input-capture function, the pulse width and periods can be measured. Figure 11.7 shows an example of input capture when both edges of FTIOA and the falling edge of FTIOB are selected as capture edges. TCNT operates as a free-running counter.

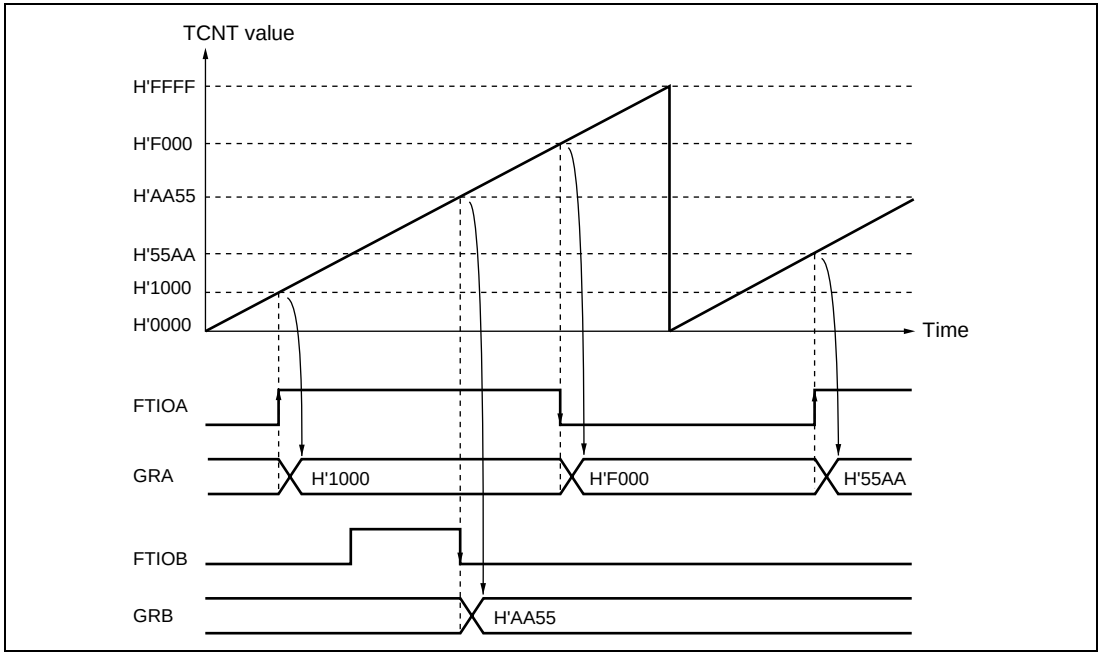

Figure 11.7 Input Capture Operating Example

Figure 11.8 shows an example of buffer operation when the GRA is set as an input-capture register and GRC is set as the buffer register for GRA. TCNT operates as a free-running counter, and FTIOA captures both rising and falling edge of the input signal. Due to the buffer operation, the GRA value is transferred to GRC by input-capture A and the TCNT value is stored in GRA.

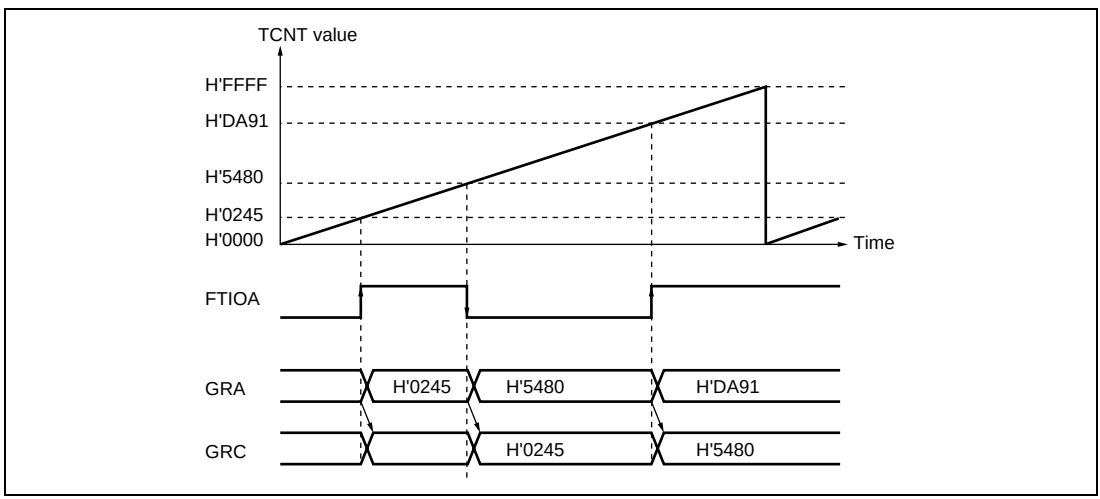

Figure 11.8 Buffer Operation Example (Input Capture)

11.4.2 PWM Operation

In PWM mode, PWM waveforms are generated by using GRA as the period register and GRB, GRC, and GRD as duty registers. PWM waveforms are output from the FTIOB, FTIOC, and FTIOD pins. Up to three-phase PWM waveforms can be output. In PWM mode, a general register functions as an output compare register automatically. The output level of each pin depends on the corresponding timer output level set bit (TOB, TOC, and TOD) in TCRW. When TOB is 1, the FTIOB output goes to 1 at compare match A and to 0 at compare match B. When TOB is 0, the FTIOB output goes to 0 at compare match A and to 1 at compare match B. Thus the compare match output level settings in TIOR0 and TIOR1 are ignored for the output pin set to PWM mode. If the same value is set in the cycle register and the duty register, the output does not change when a compare match occurs.

Figure 11.9 shows an example of operation in PWM mode. The output signals go to 1 and TCNT is cleared at compare match A, and the output signals go to 0 at compare match B, C, and D (TOB, TOC, and TOD = 1: initial output values are set to 1).

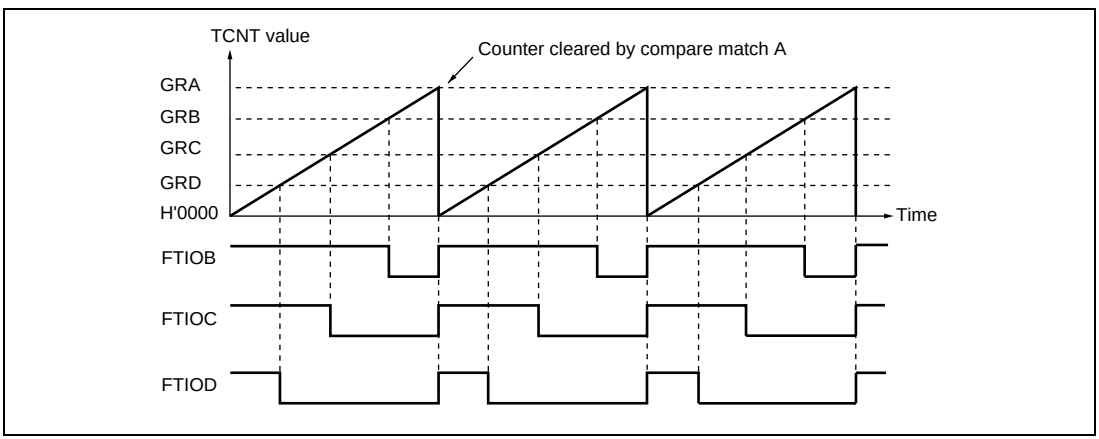

Figure 11.9 PWM Mode Example (1)

Figure 11.10 shows another example of operation in PWM mode. The output signals go to 0 and TCNT is cleared at compare match A, and the output signals go to 1 at compare match B, C, and D (TOB, TOC, and TOD = 0: initial output values are set to 1).

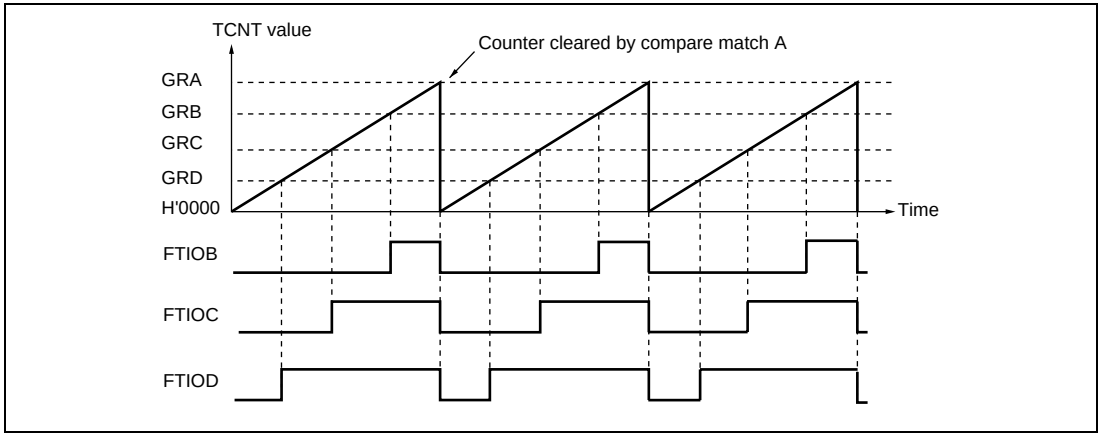

Figure 11.10 PWM Mode Example (2)

Figure 11.11 shows an example of buffer operation when the FTIOB pin is set to PWM mode and GRD is set as the buffer register for GRB. TCNT is cleared by compare match A, and FTIOB outputs 1 at compare match B and 0 at compare match A.

Due to the buffer operation, the FTIOB output level changes and the value of buffer register GRD is transferred to GRB whenever compare match B occurs. This procedure is repeated every time compare match B occurs.

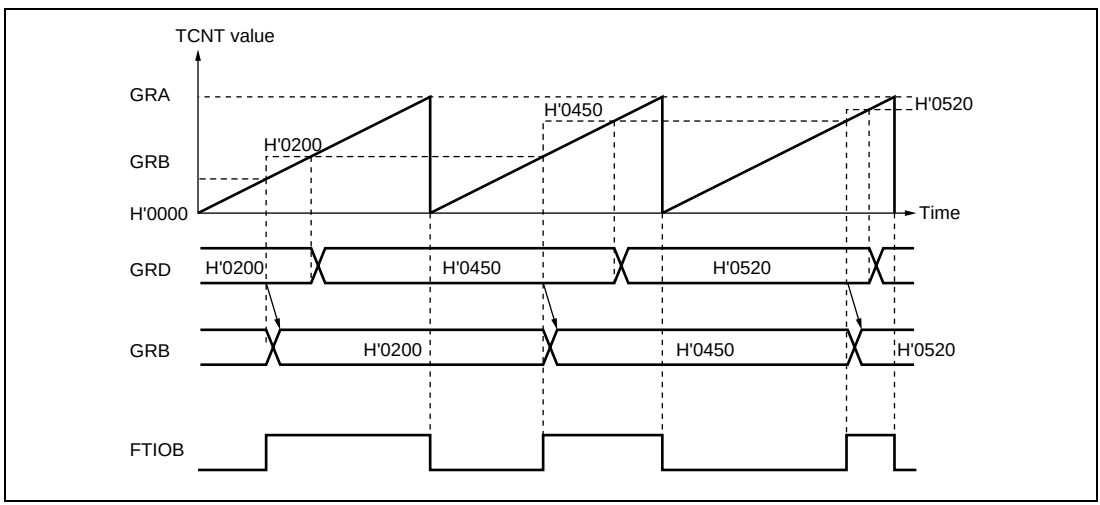

Figure 11.11 Buffer Operation Example (Output Compare)

Figures 11.12 and 11.13 show examples of the output of PWM waveforms with duty cycles of 0% and 100%.

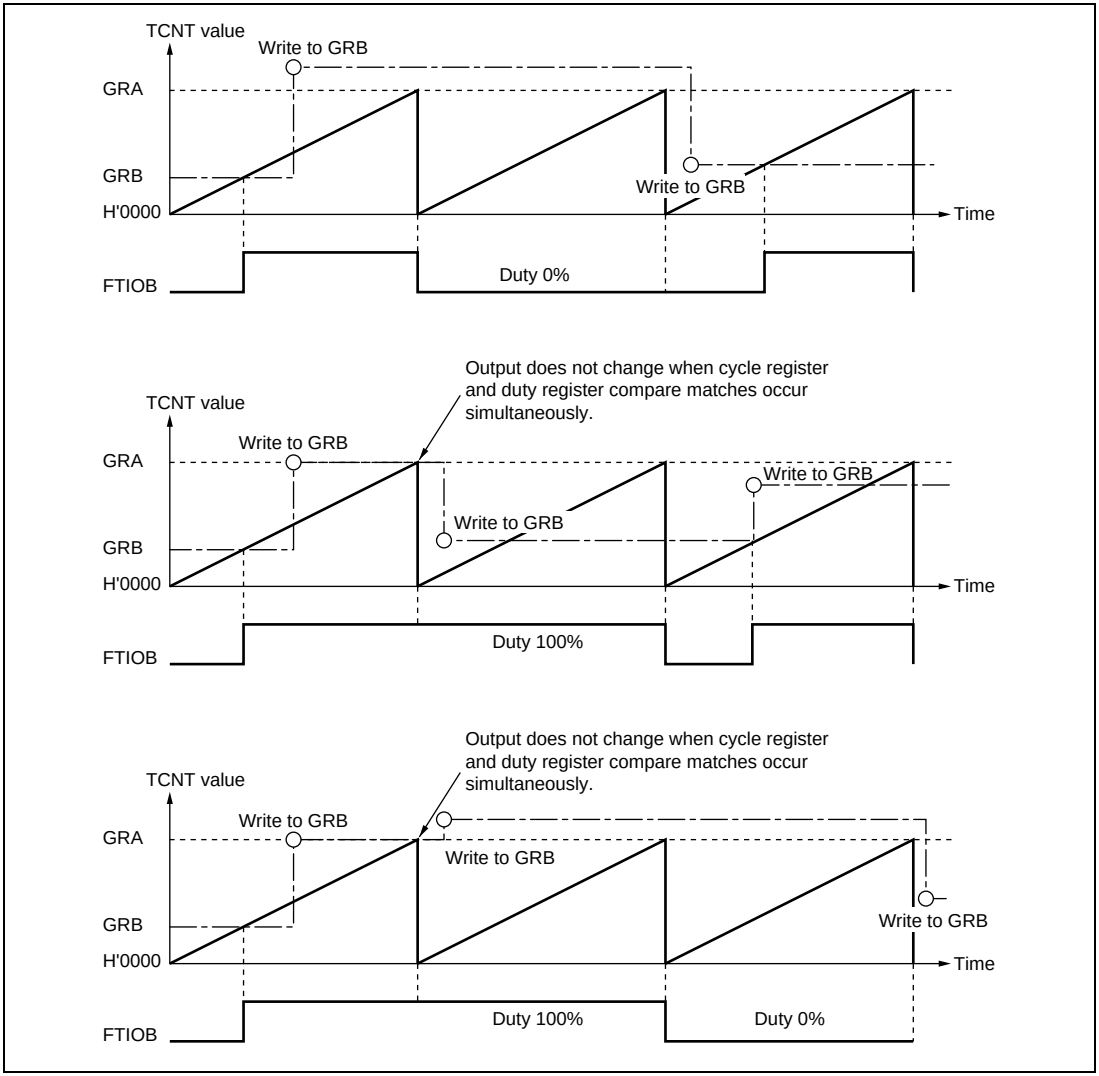

Figure 11.12 PWM Mode Example
(TOB, TOC, and TOD = 0: initial output values are set to 0)

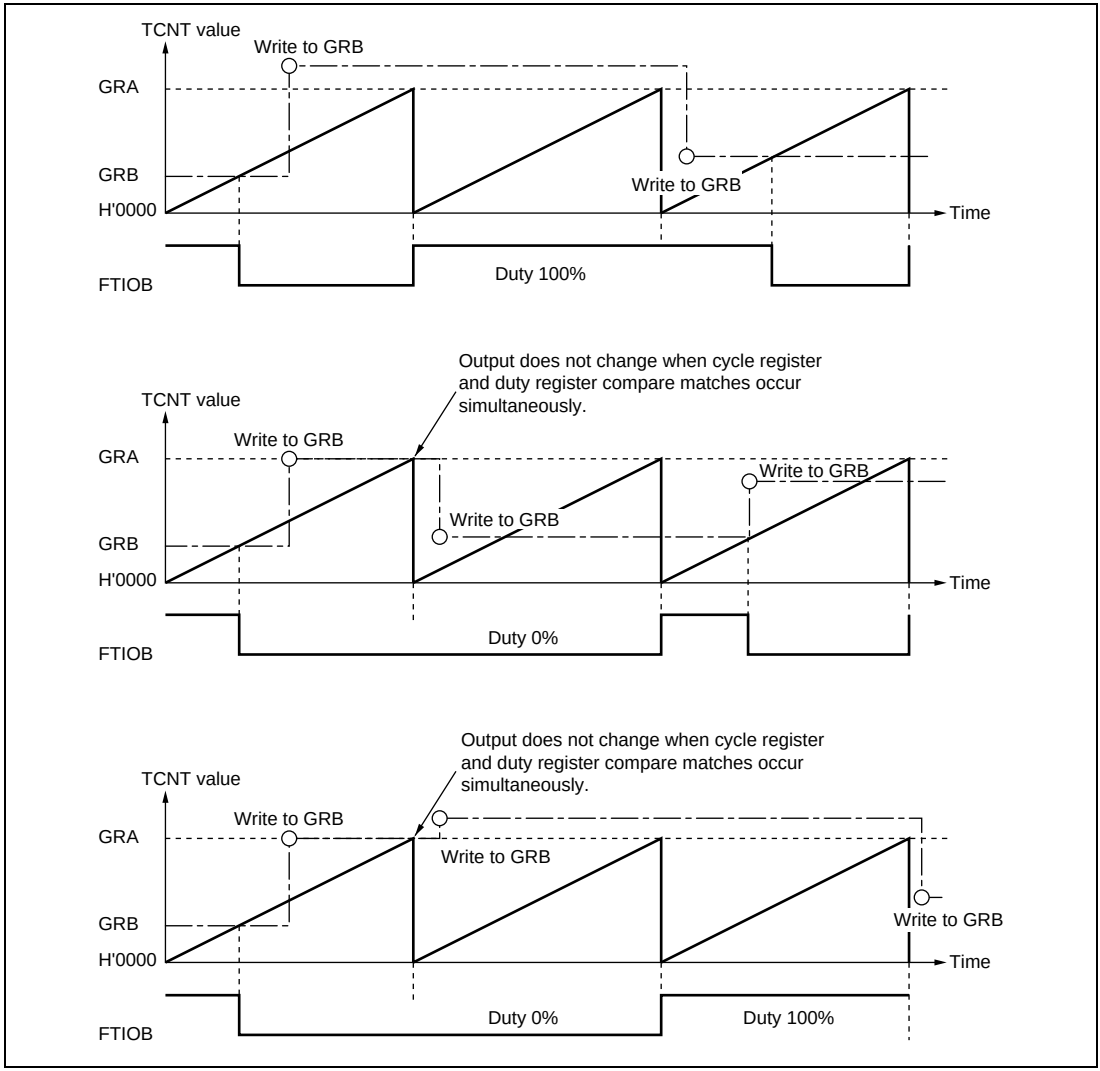

Figure 11.13 PWM Mode Example
(TOB, TOC, and TOD = 1: initial output values are set to 1)

11.5 Operation Timing

11.5.1 TCNT Count Timing

Figure 11.14 shows the TCNT count timing when the internal clock source is selected. Figure 11.15 shows the timing when the external clock source is selected. The pulse width of the external clock signal must be at least two system clock (ϕ) cycles; shorter pulses will not be counted correctly.

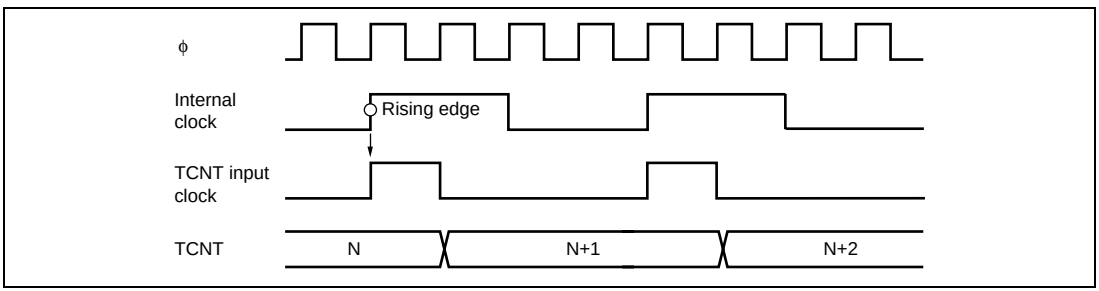

Figure 11.14 Count Timing for Internal Clock Source

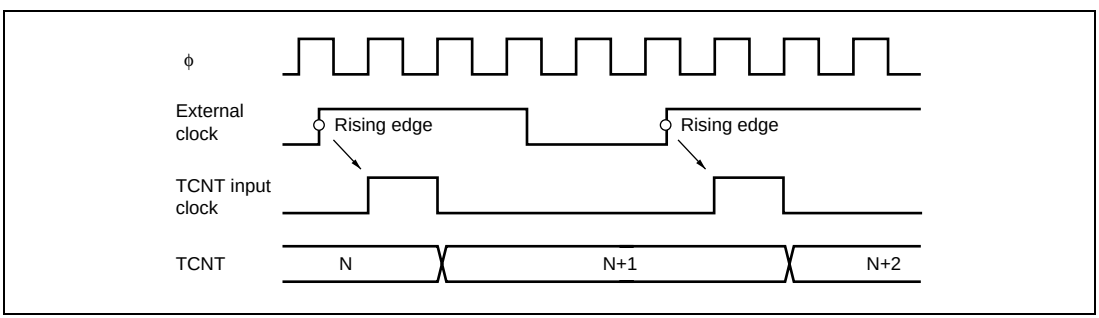

Figure 11.15 Count Timing for External Clock Source

11.5.2 Output Compare Output Timing

The compare match signal is generated in the last state in which TCNT and GR match (when TCNT changes from the matching value to the next value). When the compare match signal is generated, the output value selected in TIOR is output at the compare match output pin (FTIOA, FTIOB, FTIOC, or FTIOD).

When TCNT matches GR, the compare match signal is generated only after the next counter clock pulse is input.

Figure 11.16 shows the output compare timing.

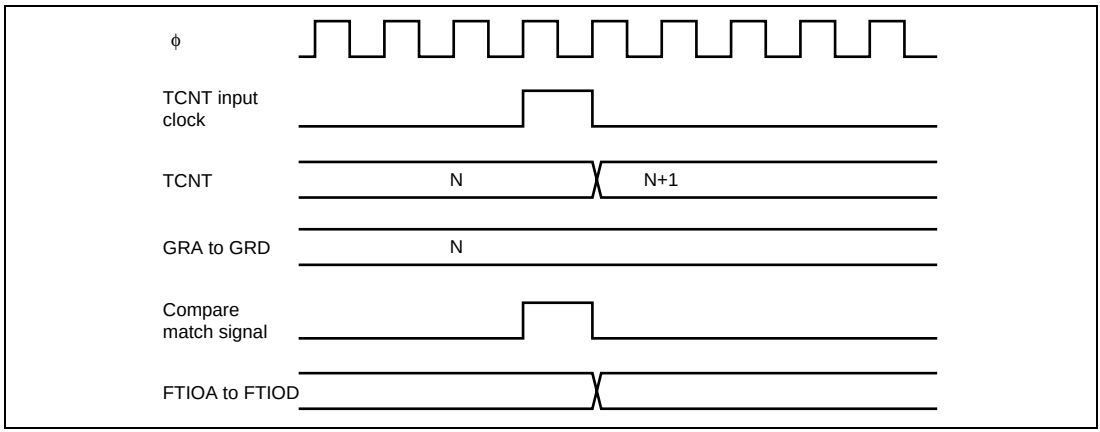

Figure 11.16 Output Compare Output Timing

11.5.3 Input Capture Timing

Input capture on the rising edge, falling edge, or both edges can be selected through settings in TIOR0 and TIOR1. Figure 11.17 shows the timing when the falling edge is selected. The pulse width of the input capture signal must be at least two system clock (ϕ) cycles; shorter pulses will not be detected correctly.

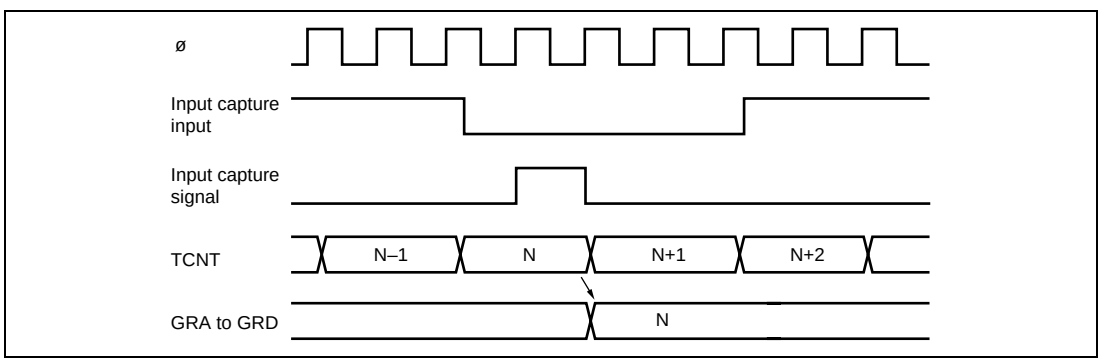

Figure 11.17 Input Capture Input Signal Timing

11.5.4 Timing of Counter Clearing by Compare Match

Figure 11.18 shows the timing when the counter is cleared by compare match A. When the GRA value is N, the counter counts from 0 to N, and its cycle is N + 1.

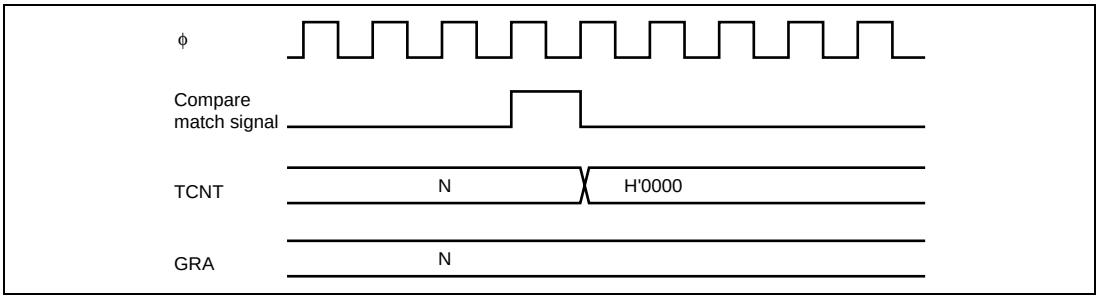

Figure 11.18 Timing of Counter Clearing by Compare Match

11.5.5 Buffer Operation Timing

Figures 11.19 and 11.20 show the buffer operation timing.

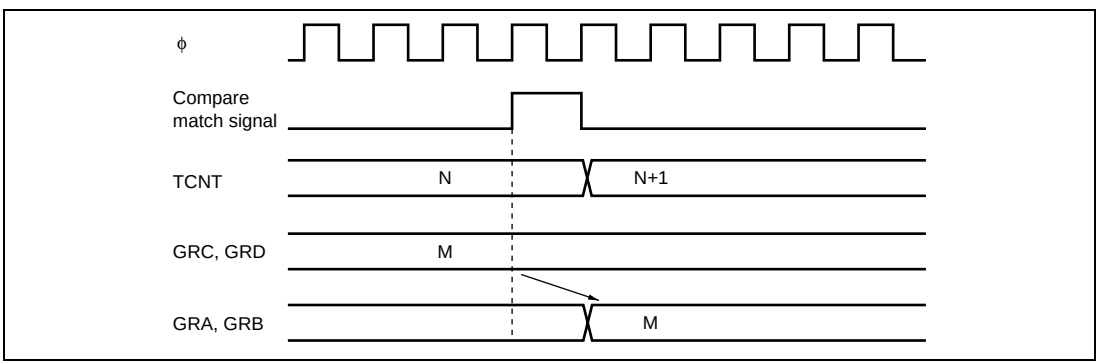

Figure 11.19 Buffer Operation Timing (Compare Match)

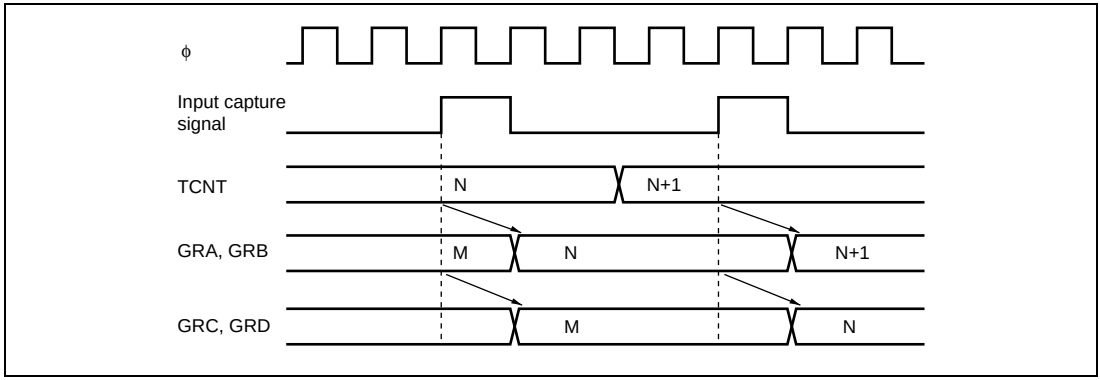

Figure 11.20 Buffer Operation Timing (Input Capture)

11.5.6 Timing of IMFA to IMFD Flag Setting at Compare Match

If a general register (GRA, GRB, GRC, or GRD) is used as an output compare register, the corresponding IMFA, IMFB, IMFC, or IMFD flag is set to 1 when TCNT matches the general register.

The compare match signal is generated in the last state in which the values match (when TCNT is updated from the matching count to the next count). Therefore, when TCNT matches a general register, the compare match signal is generated only after the next TCNT clock pulse is input.

Figure 11.21 shows the timing of the IMFA to IMFD flag setting at compare match.

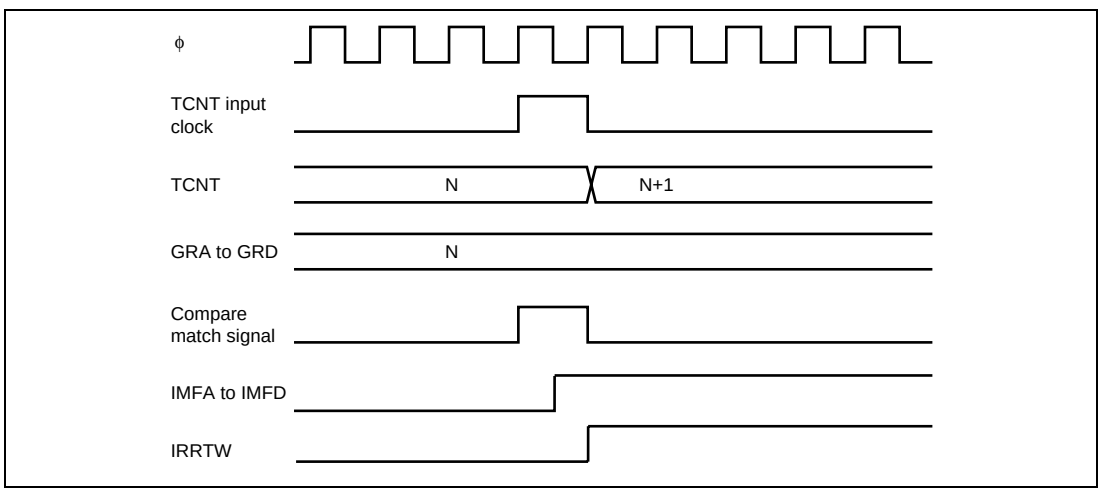

Figure 11.21 Timing of IMFA to IMFD Flag Setting at Compare Match

11.5.7 Timing of IMFA to IMFD Setting at Input Capture

If a general register (GRA, GRB, GRC, or GRD) is used as an input capture register, the corresponding IMFA, IMFB, IMFC, or IMFD flag is set to 1 when an input capture occurs. Figure 11.22 shows the timing of the IMFA to IMFD flag setting at input capture.

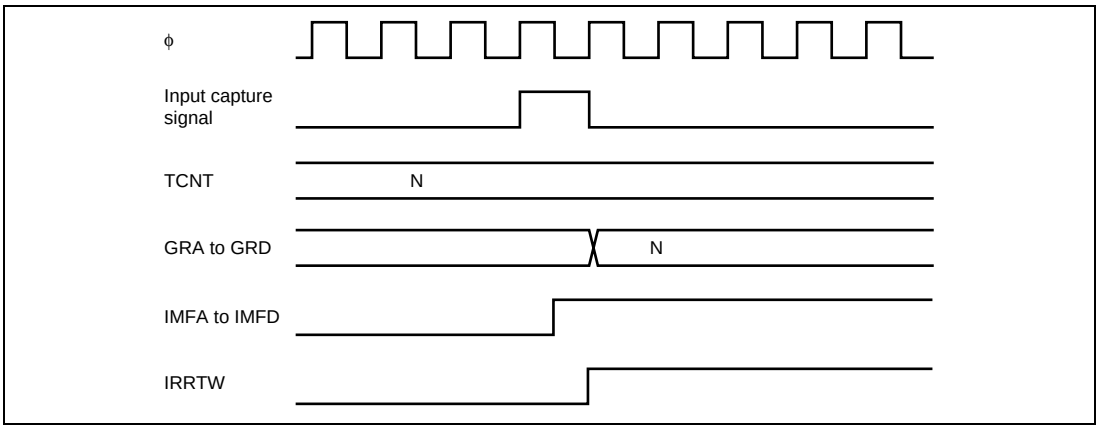

Figure 11.22 Timing of IMFA to IMFD Flag Setting at Input Capture

11.5.8 Timing of Status Flag Clearing

When the CPU reads a status flag while it is set to 1, then writes 0 in the status flag, the status flag is cleared. Figure 11.23 shows the status flag clearing timing.

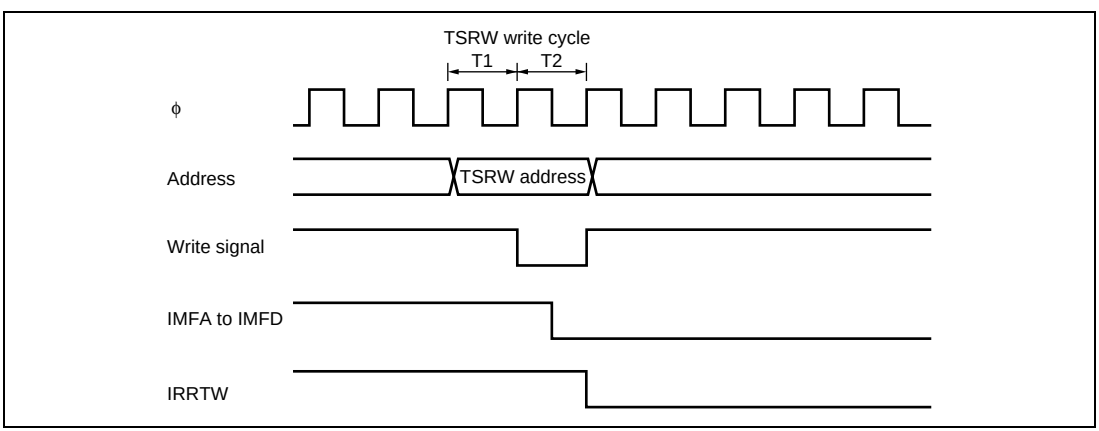

Figure 11.23 Timing of Status Flag Clearing by CPU

11.6 Usage Notes

The following types of contention or operation can occur in timer W operation.

1. The pulse width of the input clock signal and the input capture signal must be at least two system clock (ϕ) cycles; shorter pulses will not be detected correctly.
2. Writing to registers is performed in the T2 state of a TCNT write cycle.

   If counter clear signal occurs in the T2 state of a TCNT write cycle, clearing of the counter takes priority and the write is not performed, as shown in figure 11.24. If counting-up is generated in the TCNT write cycle to contend with the TCNT counting-up, writing takes precedence.
3. Depending on the timing, TCNT may be incremented by a switch between different internal clock sources. When TCNT is internally clocked, an increment pulse is generated from the rising edge of an internal clock signal, that is divided system clock (ϕ). Therefore, as shown in figure 11.25 the switch is from a low clock signal to a high clock signal, the switchover is seen as a rising edge, causing TCNT to increment.
4. If timer W enters module standby mode while an interrupt request is generated, the interrupt request cannot be cleared. Before entering module standby mode, disable interrupt requests.

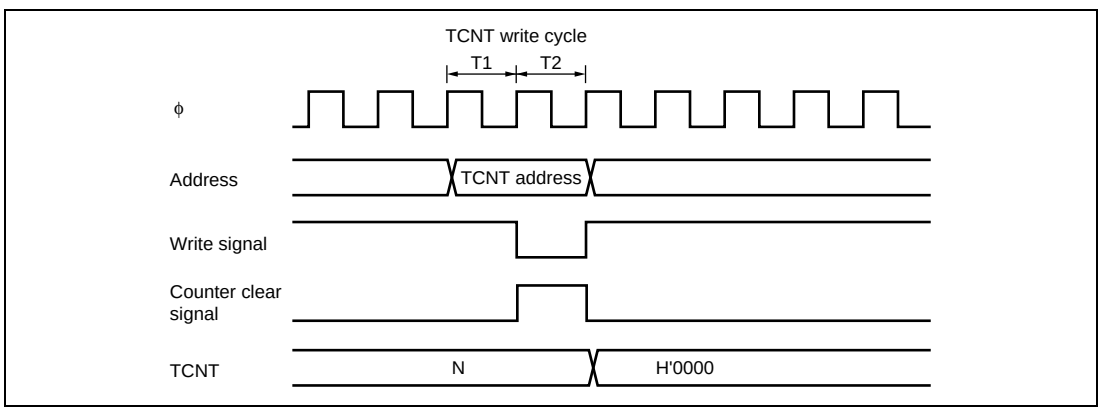

Figure 11.24 Contention between TCNT Write and Clear

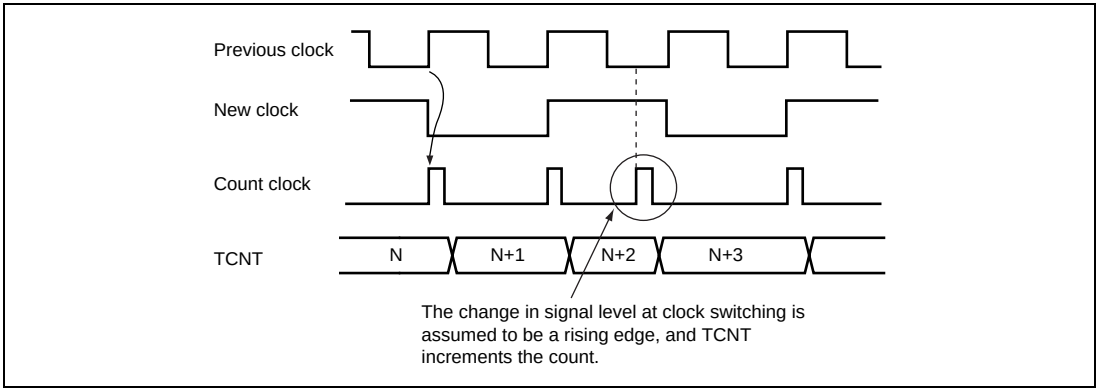

Figure 11.25 Internal Clock Switching and TCNT Operation

Section 12 Watchdog Timer

The watchdog timer is an 8-bit timer that can generate an internal reset signal for this LSI if a system crash prevents the CPU from writing to the timer counter, thus allowing it to overflow.

The block diagram of the watchdog timer is shown in figure 12.1.

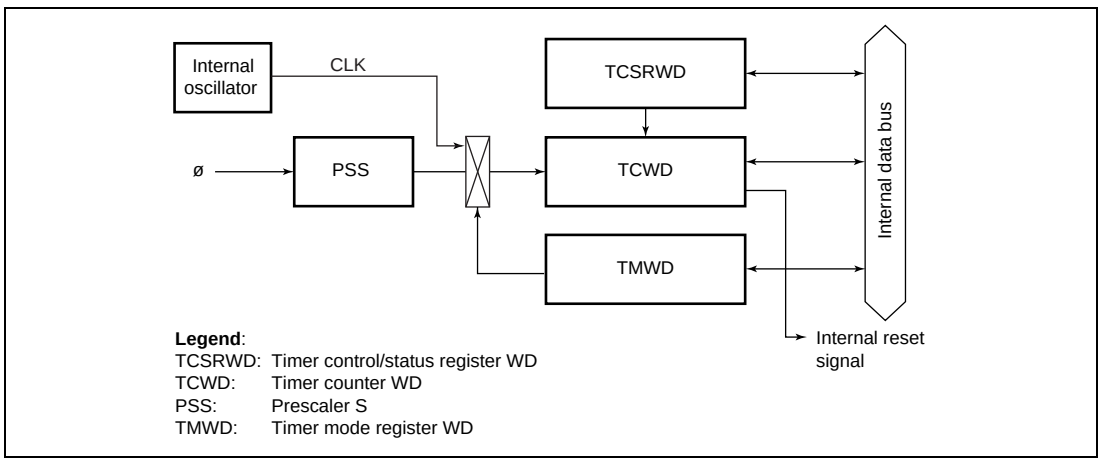

Figure 12.1 Block Diagram of Watchdog Timer

12.1 Features

- Selectable from nine counter input clocks.

  Eight clock sources (ϕ/64, ϕ/128, ϕ/256, ϕ/512, ϕ/1024, ϕ/2048, ϕ/4096, and ϕ/8192) or the internal oscillator can be selected as the timer-counter clock. When the internal oscillator is selected, it can operate as the watchdog timer in any operating mode.
- Reset signal generated on counter overflow

  An overflow period of 1 to 256 times the selected clock can be set.

12.2 Register Descriptions

The watchdog timer has the following registers.

- Timer control/status register WD (TCSRWD)
- Timer counter WD (TCWD)
- Timer mode register WD (TMWD)

12.2.1 Timer Control/Status Register WD (TCSRWD)

TCSRWD performs the TCSRWD and TCWD write control. TCSRWD also controls the watchdog timer operation and indicates the operating state. TCSRWD must be rewritten by using the MOV instruction. The bit manipulation instruction cannot be used to change the setting value.

Bit	Bit Name	Initial Value	R/W	Description
7	B6WI	1	R/W	Bit 6 Write Inhibit The TCWE bit can be written only when the write value of the B6WI bit is 0. This bit is always read as 1.
6	TCWE	0	R/W	Timer Counter WD Write Enable TCWD can be written when the TCWE bit is set to 1. When writing data to this bit, the value for bit 7 must be 0.
5	B4WI	1	R/W	Bit 4 Write Inhibit The TCSRWE bit can be written only when the write value of the B4WI bit is 0. This bit is always read as 1.
4	TCSRWE	0	R/W	Timer Control/Status Register W Write Enable The WDON and WRST bits can be written when the TCSRWE bit is set to 1. When writing data to this bit, the value for bit 5 must be 0.
3	B2WI	1	R/W	Bit 2 Write Inhibit This bit can be written to the WDON bit only when the write value of the B2WI bit is 0. This bit is always read as 1.
2	WDON	0	R/W	Watchdog Timer On TCWD starts counting up when WDON is set to 1 and halts when WDON is cleared to 0. [Setting condition] When 1 is written to the WDON bit while writing 0 to the B2WI bit when the TCSRWE bit=1 [Clearing condition] • Reset by $\overline{\text{RES}}$ pin • When 0 is written to the WDON bit while writing 0 to the B2WI when the TCSRWE bit=1
1	B0WI	1	R/W	Bit 0 Write Inhibit This bit can be written to the WRST bit only when the write value of the B0WI bit is 0. This bit is always read as 1.

Bit	Bit Name	Initial Value	R/W	Description
0	WRST	0	R/W	Watchdog Timer Reset [Setting condition] When TCWD overflows and an internal reset signal is generated [Clearing condition] • Reset by $\overline{\text{RES}}$ pin • When 0 is written to the WRST bit while writing 0 to the B0WI bit when the TCSRWE bit=1

12.2.2 Timer Counter WD (TCWD)

TCWD is an 8-bit readable/writable up-counter. When TCWD overflows from H'FF to H'00, the internal reset signal is generated and the WRST bit in TCSRWD is set to 1. TCWD is initialized to H'00.

12.2.3 Timer Mode Register WD (TMWD)

TMWD selects the input clock.

Bit	Bit Name	Initial Value	R/W	Description
7 to 4	—	All 1	—	Reserved These bits are always read as 1.
3	CKS3	1	R/W	Clock Select 3 to 0
2	CKS2	1	R/W	Select the clock to be input to TCWD.
1	CKS1	1	R/W	1000: Internal clock: counts on ϕ/64
0	CKS0	1	R/W	1001: Internal clock: counts on ϕ/128 1010: Internal clock: counts on ϕ/256 1011: Internal clock: counts on ϕ/512 1100: Internal clock: counts on ϕ/1024 1101: Internal clock: counts on ϕ/2048 1110: Internal clock: counts on ϕ/4096 1111: Internal clock: counts on ϕ8192 0XXX: Internal oscillator For the internal oscillator overflow periods, see section 17, Electrical Characteristics.

Legend X: Don't care.

12.3 Operation

The watchdog timer is provided with an 8-bit counter. If 1 is written to WDON while writing 0 to B2WI when the TCSRWE bit in TCSRWD is set to 1, TCWD begins counting up. (To operate the watchdog timer, two write accesses to TCSRWD are required.) When a clock pulse is input after the TCWD count value has reached H'FF, the watchdog timer overflows and an internal reset signal is generated. The internal reset signal is output for a period of 512 ϕ_{osc} clock cycles. TCWD is a writable counter, and when a value is set in TCWD, the count-up starts from that value. An overflow period in the range of 1 to 256 input clock cycles can therefore be set, according to the TCWD set value.

Figure 12.2 shows an example of watchdog timer operation.

Example: With 30ms overflow period when ϕ = 4 MHz

$$\frac{4 \times 10^6}{8192} \times 30 \times 10^{-3} = 14.6$$

Therefore, 256 – 15 = 241 (H'F1) is set in TCW.

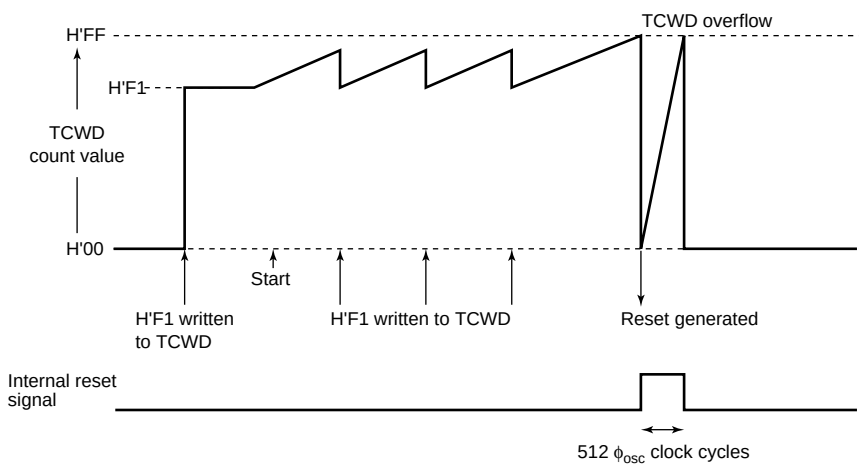

Figure 12.2 Watchdog Timer Operation Example

Section 13 Serial Communication Interface3 (SCI3)

Serial Communication Interface 3 (SCI3) can handle both asynchronous and clocked synchronous serial communication. In the asynchronous method, serial data communication can be carried out using standard asynchronous communication chips such as a Universal Asynchronous Receiver/Transmitter (UART) or an Asynchronous Communication Interface Adapter (ACIA). A function is also provided for serial communication between processors (multiprocessor communication function).

Figure 13.1 shows a block diagram of the SCI3.

13.1 Features

- Choice of asynchronous or clocked synchronous serial communication mode
- Full-duplex communication capability

  The transmitter and receiver are mutually independent, enabling transmission and reception to be executed simultaneously.

  Double-buffering is used in both the transmitter and the receiver, enabling continuous transmission and continuous reception of serial data.
- On-chip baud rate generator allows any bit rate to be selected
- External clock or on-chip baud rate generator can be selected as a transfer clock source.
- Six interrupt sources

  Transmit-end, transmit-data-empty, receive-data-full, overrun error, framing error, and parity error.

Asynchronous mode

- Data length: 7 or 8 bits
- Stop bit length: 1 or 2 bits
- Parity: Even, odd, or none
- Receive error detection: Parity, overrun, and framing errors
- Break detection: Break can be detected by reading the RxD pin level directly in the case of a framing error

Clocked synchronous mode

- Data length: 8 bits
- Receive error detection: Overrun errors detected

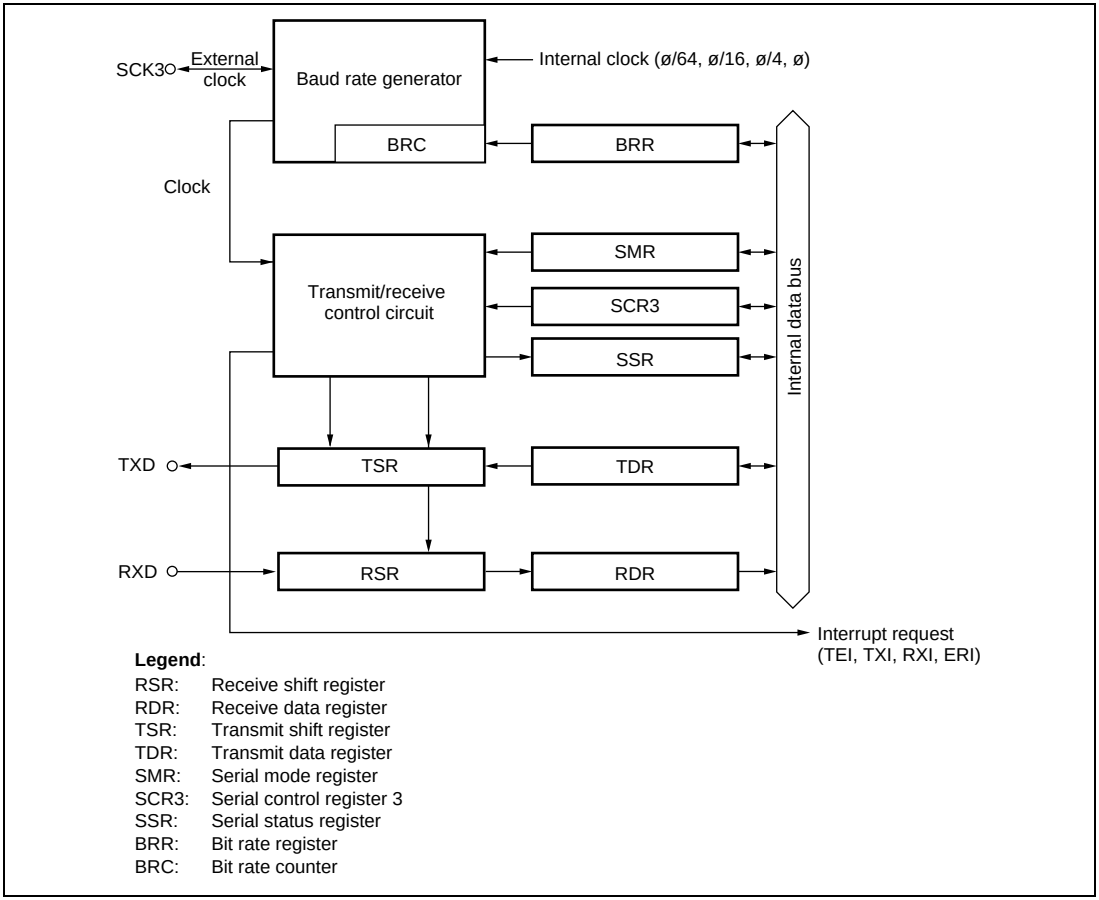

Figure 13.1 Block Diagram of SCI3

13.2 Input/Output Pins

Table 13.1 shows the SCI3 pin configuration.

Table 13.1 Pin Configuration

Pin Name	Abbreviation	I/O	Function
SCI3 clock	SCK3	I/O	SCI3 clock input/output
SCI3 receive data input	RXD	Input	SCI3 receive data input
SCI3 transmit data output	TXD	Output	SCI3 transmit data output

13.3 Register Descriptions

The SCI3 has the following registers.

- Receive shift register (RSR)
- Receive data register (RDR)
- Transmit shift register (TSR)
- Transmit data register (TDR)
- Serial mode register (SMR)
- Serial control register 3 (SCR3)
- Serial status register (SSR)
- Bit rate register (BRR)

13.3.1 Receive Shift Register (RSR)

RSR is a shift register that is used to receive serial data input from the RxD pin and convert it into parallel data. When one byte of data has been received, it is transferred to RDR automatically. RSR cannot be directly accessed by the CPU.

13.3.2 Receive Data Register (RDR)

RDR is an 8-bit register that stores received data. When the SCI3 has received one byte of serial data, it transfers the received serial data from RSR to RDR, where it is stored. After this, RSR is receive-enabled. As RSR and RDR function as a double buffer in this way, continuous receive operations are possible. After confirming that the RDRF bit in SSR is set to 1, read RDR only once. RDR cannot be written to by the CPU. RDR is initialized to H'00.

13.3.3 Transmit Shift Register (TSR)

TSR is a shift register that transmits serial data. To perform serial data transmission, the SCI3 first transfers transmit data from TDR to TSR automatically, then sends the data that starts from the LSB to the TXD pin. TSR cannot be directly accessed by the CPU.

13.3.4 Transmit Data Register (TDR)

TDR is an 8-bit register that stores data for transmission. When the SCI3 detects that TSR is empty, it transfers the transmit data written in TDR to TSR and starts transmission. The double-buffered structure of TDR and TSR enables continuous serial transmission. If the next transmit data has already been written to TDR during transmission of one-frame data, the SCI3 transfers the written data to TSR to continue transmission. To achieve reliable serial transmission, write transmit data to TDR only once after confirming that the TDRE bit in SSR is set to 1. TDR is initialized to H'FF.

13.3.5 Serial Mode Register (SMR)

SMR is used to set the SCI3's serial transfer format and select the on-chip baud rate generator clock source.

Bit	Bit Name	Initial Value	R/W	Description
7	COM	0	R/W	Communication Mode 0: Asynchronous mode 1: Clocked synchronous mode
6	CHR	0	R/W	Character Length (enabled only in asynchronous mode) 0: Selects 8 bits as the data length. 1: Selects 7 bits as the data length.
5	PE	0	R/W	Parity Enable (enabled only in asynchronous mode) When this bit is set to 1, the parity bit is added to transmit data before transmission, and the parity bit is checked in reception.
4	PM	0	R/W	Parity Mode (enabled only when the PE bit is 1 in asynchronous mode) 0: Selects even parity. 1: Selects odd parity.
3	STOP	0	R/W	Stop Bit Length (enabled only in asynchronous mode) Selects the stop bit length in transmission. 0: 1 stop bit 1: 2 stop bits For reception, only the first stop bit is checked, regardless of the value in the bit. If the second stop bit is 0, it is treated as the start bit of the next transmit character.
2	MP	0	R/W	Multiprocessor Mode When this bit is set to 1, the multiprocessor communication function is enabled. The PE bit and PM bit settings are invalid. In clocked synchronous mode, this bit should be cleared to 0.

Bit	Bit Name	Initial Value	R/W	Description
1	CKS1	0	R/W	Clock Select 0 and 1
0	CKS0	0	R/W	These bits select the clock source for the on-chip baud rate generator. 00: ø clock (n = 0) 01: ø/4 clock (n = 1) 10: ø/16 clock (n = 2) 11: ø/64 clock (n = 3) For the relationship between the bit rate register setting and the baud rate, see section 13.3.8, Bit Rate Register (BRR). n is the decimal representation of the value of n in BRR (see section 13.3.8, Bit Rate Register (BRR)).

13.3.6 Serial Control Register 3 (SCR3)

SCR3 is a register that enables or disables SCI3 transfer operations and interrupt requests, and is also used to select the transfer clock source. For details on interrupt requests, refer to section 13.7, Interrupts.

Bit	Bit Name	Initial Value	R/W	Description
7	TIE	0	R/W	Transmit Interrupt Enable When this bit is set to 1, the TXI interrupt request is enabled.
6	RIE	0	R/W	Receive Interrupt Enable When this bit is set to 1, RXI and ERI interrupt requests are enabled.
5	TE	0	R/W	Transmit Enable When this bit is set to 1, transmission is enabled.
4	RE	0	R/W	Receive Enable When this bit is set to 1, reception is enabled.

Bit	Bit Name	Initial Value	R/W	Description
3	MPIE	0	R/W	Multiprocessor Interrupt Enable (enabled only when the MP bit in SMR is 1 in asynchronous mode) When this bit is set to 1, receive data in which the multiprocessor bit is 0 is skipped, and setting of the RDRF, FER, and OER status flags in SSR is prohibited. On receiving data in which the multiprocessor bit is 1, this bit is automatically cleared and normal reception is resumed. For details, refer to section 13.6, Multiprocessor Communication Function.
2	TEIE	0	R/W	Transmit End Interrupt Enable When this bit is set to 1, the TEI interrupt request is enabled.
1	CKE1	0	R/W	Clock Enable 0 and 1
0	CKE0	0	R/W	Selects the clock source. Asynchronous mode: 00: Internal baud rate generator 01: Internal baud rate generator Outputs a clock of the same frequency as the bit rate from the SCK3 pin. 10: External clock Inputs a clock with a frequency 16 times the bit rate from the SCK3 pin. 11:Reserved Clocked synchronous mode: 00: Internal clock (SCK3 pin functions as clock output) 01:Reserved 10: External clock (SCK3 pin functions as clock input) 11:Reserved

13.3.7 Serial Status Register (SSR)

SSR is a register containing status flags of the SCI3 and multiprocessor bits for transfer. 1 cannot be written to flags TDRE, RDRF, OER, PER, and FER; they can only be cleared.

Bit	Bit Name	Initial Value	R/W	Description
7	TDRE	1	R/W	Transmit Data Register Empty Displays whether TDR contains transmit data. [Setting conditions] • When the TE bit in SCR3 is 0 • When data is transferred from TDR to TSR [Clearing conditions] • When 0 is written to TDRE after reading TDRE = 1 • When the transmit data is written to TDR
6	RDRF	0	R/W	Receive Data Register Full Indicates that the received data is stored in RDR. [Setting condition] • When serial reception ends normally and receive data is transferred from RSR to RDR [Clearing conditions] • When 0 is written to RDRF after reading RDRF = 1 • When data is read from RDR
5	OER	0	R/W	Overrun Error [Setting condition] • When an overrun error occurs in reception [Clearing condition] • When 0 is written to OER after reading OER = 1

Bit	Bit Name	Initial Value	R/W	Description
4	FER	0	R/W	Framing Error [Setting condition] • When a framing error occurs in reception [Clearing condition] • When 0 is written to FER after reading FER = 1
3	PER	0	R/W	Parity Error [Setting condition] • When a parity error is generated during reception [Clearing condition] • When 0 is written to PER after reading PER = 1
2	TEND	1	R	Transmit End [Setting conditions] • When the TE bit in SCR3 is 0 • When TDRE = 1 at transmission of the last bit of a 1-byte serial transmit character [Clearing conditions] • When 0 is written to TEND after reading TEND = 1 • When the transmit data is written to TDR
1	MPBR	0	R	Multiprocessor Bit Receive MPBR stores the multiprocessor bit in the receive character data. When the RE bit in SCR3 is cleared to 0, its previous state is retained.
0	MPBT	0	R/W	Multiprocessor Bit Transfer MPBT stores the multiprocessor bit to be added to the transmit character data.

13.3.8 Bit Rate Register (BRR)

BRR is an 8-bit register that adjusts the bit rate. The initial value of BRR is H'FF. Table 13.2 shows the relationship between the N setting in BRR and the n setting in bits CKS1 and CKS0 of SMR in asynchronous mode. Table 13.3 shows the maximum bit rate for each frequency in asynchronous mode. The values shown in both tables 13.2 and 13.3 are values in active (high-speed) mode. Table 13.4 shows the relationship between the N setting in BRR and the n setting in bits CKS1 and CKS0 in SMR in clocked synchronous mode. The values shown in table 13.4 are values in active (high-speed) mode. The N setting in BRR and error for other operating frequencies and bit rates can be obtained by the following formulas:

[Asynchronous Mode]

$$N = \frac{\phi}{64 \times 2^{2n-1} \times B} \times 10^6 - 1$$

$$\text{Error (\%)} = \left\{ \frac{\phi \times 10^6}{(N + 1) \times B \times 64 \times 2^{2n-1}} - 1 \right\} \times 100$$

[Clocked Synchronous Mode]

$$N = \frac{\phi}{8 \times 2^{2n-1} \times B} \times 10^6 - 1$$

Note: B: Bit rate (bit/s)

N: BRR setting for baud rate generator ($0 \leq N \leq 255$)

ϕ: Operating frequency (MHz)

n: CKS1 and CKS0 setting for SMR ($0 \leq N \leq 3$)

Table 13.2 Examples of BRR Settings for Various Bit Rates (Asynchronous Mode) (1)

	Operating Frequency ø (MHz)											
	2			2.097152			2.4576			3		
Bit Rate (bits/s)	n	N	Error (%)	n	N	Error (%)	n	N	Error (%)	n	N	Error (%)
110	1	141	0.03	1	148	–0.04	1	174	–0.26	1	212	0.03
150	1	103	0.16	1	108	0.21	1	127	0.00	1	155	0.16
300	0	207	0.16	0	217	0.21	0	255	0.00	1	77	0.16
600	0	103	0.16	0	108	0.21	0	127	0.00	0	155	0.16
1200	0	51	0.16	0	54	–0.70	0	63	0.00	0	77	0.16
2400	0	25	0.16	0	26	1.14	0	31	0.00	0	38	0.16
4800	0	12	0.16	0	13	–2.48	0	15	0.00	0	19	–2.34
9600	0	6	–6.99	0	6	–2.48	0	7	0.00	0	9	–2.34
19200	0	2	8.51	0	2	13.78	0	3	0.00	0	4	–2.34
31250	0	1	0.00	0	1	4.86	0	1	22.88	0	2	0.00
38400	0	1	–18.62	0	1	–14.67	0	1	0.00	—	—	—

Legend

— : A setting is available but error occurs

	Operating Frequency ø (MHz)											
	3.6864			4			4.9152			5		
Bit Rate (bits/s)	n	N	Error (%)	n	N	Error (%)	n	N	Error (%)	n	N	Error (%)
110	2	64	0.70	2	70	0.03	2	86	0.31	2	88	–0.25
150	1	191	0.00	1	207	0.16	1	255	0.00	2	64	0.16
300	1	95	0.00	1	103	0.16	1	127	0.00	1	129	0.16
600	0	191	0.00	0	207	0.16	0	255	0.00	1	64	0.16
1200	0	95	0.00	0	103	0.16	0	127	0.00	0	129	0.16
2400	0	47	0.00	0	51	0.16	0	63	0.00	0	64	0.16
4800	0	23	0.00	0	25	0.16	0	31	0.00	0	32	–1.36
9600	0	11	0.00	0	12	0.16	0	15	0.00	0	15	1.73
19200	0	5	0.00	0	6	–6.99	0	7	0.00	0	7	1.73
31250	—	—	—	0	3	0.00	0	4	–1.70	0	4	0.00
38400	0	2	0.00	0	2	8.51	0	3	0.00	0	3	1.73

Table 13.2 Examples of BRR Settings for Various Bit Rates (Asynchronous Mode) (2)

	Operating Frequency ø (MHz)											
	6			6.144			7.3728			8		
Bit Rate (bit/s)	n	N	Error (%)	n	N	Error (%)	n	N	Error (%)	n	N	Error (%)
110	2	106	–0.44	2	108	0.08	2	130	–0.07	2	141	0.03
150	2	77	0.16	2	79	0.00	2	95	0.00	2	103	0.16
300	1	155	0.16	1	159	0.00	1	191	0.00	1	207	0.16
600	1	77	0.16	1	79	0.00	1	95	0.00	1	103	0.16
1200	0	155	0.16	0	159	0.00	0	191	0.00	0	207	0.16
2400	0	77	0.16	0	79	0.00	0	95	0.00	0	103	0.16
4800	0	38	0.16	0	39	0.00	0	47	0.00	0	51	0.16
9600	0	19	–2.34	0	19	0.00	0	23	0.00	0	25	0.16
19200	0	9	–2.34	0	9	0.00	0	11	0.00	0	12	0.16
31250	0	5	0.00	0	5	2.40	0	6	5.33	0	7	0.00
38400	0	4	–2.34	0	4	0.00	0	5	0.00	0	6	-6.99

	Operating Frequency ø (MHz)											
	9.8304			10			12			12.888		
Bit Rate (bit/s)	n	N	Error (%)	n	N	Error (%)	n	N	Error (%)	n	N	Error (%)
110	2	174	–0.26	2	177	–0.25	2	212	0.03	2	217	0.08
150	2	127	0.00	2	129	0.16	2	155	0.16	2	159	0.00
300	1	255	0.00	2	64	0.16	2	77	0.16	2	79	0.00
600	1	127	0.00	1	129	0.16	1	155	0.16	1	159	0.00
1200	0	255	0.00	1	64	0.16	1	77	0.16	1	79	0.00
2400	0	127	0.00	0	129	0.16	0	155	0.16	0	159	0.00
4800	0	63	0.00	0	64	0.16	0	77	0.16	0	79	0.00
9600	0	31	0.00	0	32	–1.36	0	38	0.16	0	39	0.00
19200	0	15	0.00	0	15	1.73	0	19	–2.34	0	19	0.00
31250	0	9	–1.70	0	9	0.00	0	11	0.00	0	11	2.40
38400	0	7	0.00	0	7	1.73	0	9	–2.34	0	9	0.00

Table 13.2 Examples of BRR Settings for Various Bit Rates (Asynchronous Mode) (3)

	Operating Frequency ø (MHz)								
	14			14.7456			16		
Bit Rate (bit/s)	n	N	Error (%)	n	N	Error (%)	n	N	Error (%)
110	2	248	–0.17	3	64	0.70	3	70	0.03
150	2	181	0.16	2	191	0.00	2	207	0.16
300	2	90	0.16	2	95	0.00	2	103	0.16
600	1	181	0.16	1	191	0.00	1	207	0.16
1200	1	90	0.16	1	95	0.00	1	103	0.16
2400	0	181	0.16	0	191	0.00	0	207	0.16
4800	0	90	0.16	0	95	0.00	0	103	0.16
9600	0	45	–0.93	0	47	0.00	0	51	0.16
19200	0	22	–0.93	0	23	0.00	0	25	0.16
31250	0	13	0.00	0	14	–1.70	0	15	0.00
38400	—	—	—	0	11	0.00	0	12	0.16

Legend

—: A setting is available but error occurs.

Table 13.3 Maximum Bit Rate for Each Frequency (Asynchronous Mode)

ø (MHz)	Maximum Bit Rate (bit/s)	n	N	ø (MHz)	Maximum Bit Rate (bit/s)	n	N
2	62500	0	0	7.3728	230400	0	0
2.097152	65536	0	0	8	250000	0	0
2.4576	76800	0	0	9.8304	307200	0	0
3	93750	0	0	10	312500	0	0
3.6864	115200	0	0	12	375000	0	0
4	125000	0	0	12.288	384000	0	0
4.9152	153600	0	0	14	437500	0	0
5	156250	0	0	14.7456	460800	0	0
6	187500	0	0	16	500000	0	0
6.144	192000	0	0				

Table 13.4 BRR Settings for Various Bit Rates (Clocked Synchronous Mode)

Bit Rate (bit/s)	Operating Frequency ø (MHz)									
	2		4		8		10		16	
	n	N	n	N	n	N	n	N	n	N
110	3	70	—	—	—	—	—	—		
250	2	124	2	249	3	124	—	—	3	249
500	1	249	2	124	2	249	—	—	3	124
1k	1	124	1	249	2	124	—	—	2	249
2.5k	0	199	1	99	1	199	1	249	2	99
5k	0	99	0	199	1	99	1	124	1	199
10k	0	49	0	99	0	199	0	249	1	99
25k	0	19	0	39	0	79	0	99	0	159
50k	0	9	0	19	0	39	0	49	0	79
100k	0	4	0	9	0	19	0	24	0	39
250k	0	1	0	3	0	7	0	9	0	15
500k	0	0*	0	1	0	3	0	4	0	7
1M			0	0*	0	1	—	—	0	3
2M					0	0*	—	—	0	1
2.5M							0	0*	—	—
4M									0	0*

Legend

Blank : No setting is available.

— : A setting is available but error occurs.

* : Continuous transfer is not possible.

13.4 Operation in Asynchronous Mode

Figure 13.2 shows the general format for asynchronous serial communication. One frame consists of a start bit (low level), followed by data (in LSB-first order), a parity bit (high or low level), and finally stop bits (high level). Inside the SCI3, the transmitter and receiver are independent units, enabling full duplex. Both the transmitter and the receiver also have a double-buffered structure, so data can be read or written during transmission or reception, enabling continuous data transfer.

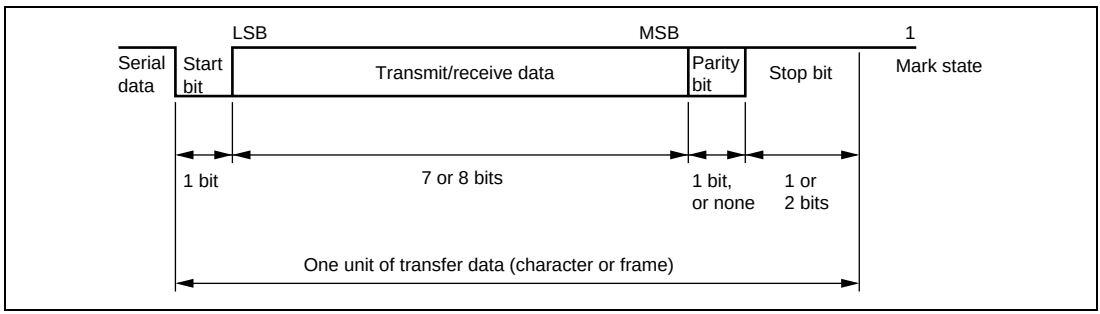

Figure 13.2 Data Format in Asynchronous Communication

13.4.1 Clock

Either an internal clock generated by the on-chip baud rate generator or an external clock input at the SCK3 pin can be selected as the SCI3's serial clock source, according to the setting of the COM bit in SMR and the CKE0 and CKE1 bits in SCR3. When an external clock is input at the SCK3 pin, the clock frequency should be 16 times the bit rate used.

When the SCI3 is operated on an internal clock, the clock can be output from the SCK3 pin. The frequency of the clock output in this case is equal to the bit rate, and the phase is such that the rising edge of the clock is in the middle of the transmit data, as shown in figure 13.3.

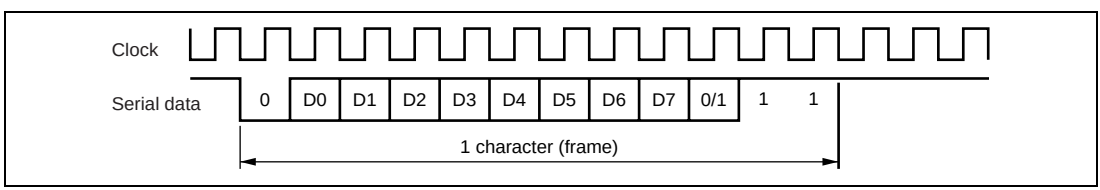

Figure 13.3 Relationship between Output Clock and Transfer Data Phase (Asynchronous Mode)(Example with 8-Bit Data, Parity, Two Stop Bits)

13.4.2 SCI3 Initialization

Follow the flowchart as shown in figure 13.4 to initialize the SCI3. When the TE bit is cleared to 0, the TDRE flag is set to 1. Note that clearing the RE bit to 0 does not initialize the contents of the RDRF, PER, FER, and OER flags, or the contents of RDR. When the external clock is used in asynchronous mode, the clock must be supplied even during initialization.

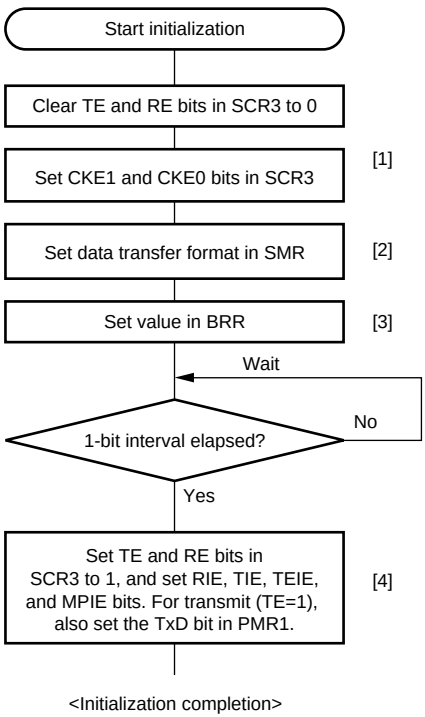

[1] Set the clock selection in SCR3. Be sure to clear bits RIE, TIE, TEIE, and MPIE, and bits TE and RE, to 0.

When the clock output is selected in asynchronous mode, clock is output immediately after CKE1 and CKE0 settings are made. When the clock output is selected at reception in clocked synchronous mode, clock is output immediately after CKE1, CKE0, and RE are set to 1.

[2] Set the data transfer format in SMR.

[3] Write a value corresponding to the bit rate to BRR. Not necessary if an external clock is used.

[4] Wait at least one bit interval, then set the TE bit or RE bit in SCR3 to 1. RE settings enable the RXD pin to be used. For transmission, set the TXD bit in PMR1 to 1 to enable the TXD output pin to be used. Also set the RIE, TIE, TEIE, and MPIE bits, depending on whether interrupts are required. In asynchronous mode, the bits are marked at transmission and idled at reception to wait for the start bit.

Figure 13.4 Sample SCI3 Initialization Flowchart

13.4.3 Data Transmission

Figure 13.5 shows an example of operation for transmission in asynchronous mode. In transmission, the SCI3 operates as described below.

1. The SCI3 monitors the TDRE flag in SSR. If the flag is cleared to 0, the SCI3 recognizes that data has been written to TDR, and transfers the data from TDR to TSR.
2. After transferring data from TDR to TSR, the SCI3 sets the TDRE flag to 1 and starts transmission. If the TIE bit is set to 1 at this time, a TXI interrupt request is generated. Continuous transmission is possible because the TXI interrupt routine writes next transmit data to TDR before transmission of the current transmit data has been completed.
3. The SCI3 checks the TDRE flag at the timing for sending the stop bit.
4. If the TDRE flag is 0, the data is transferred from TDR to TSR, the stop bit is sent, and then serial transmission of the next frame is started.
5. If the TDRE flag is 1, the TEND flag in SSR is set to 1, the stop bit is sent, and then the “mark state” is entered, in which 1 is output. If the TEIE bit in SCR3 is set to 1 at this time, a TEI interrupt request is generated.
6. Figure 13.6 shows a sample flowchart for transmission in asynchronous mode.

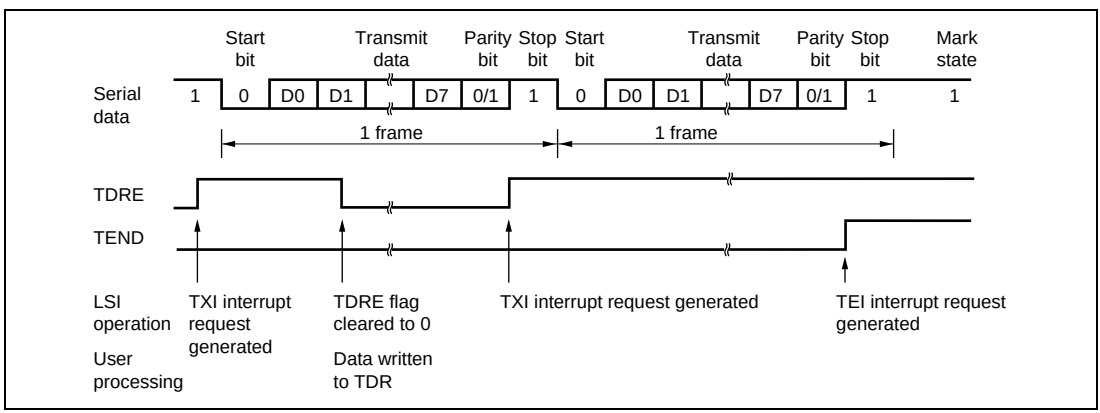

Figure 13.5 Example SCI3 Operation in Transmission in Asynchronous Mode (8-Bit Data, Parity, One Stop Bit)

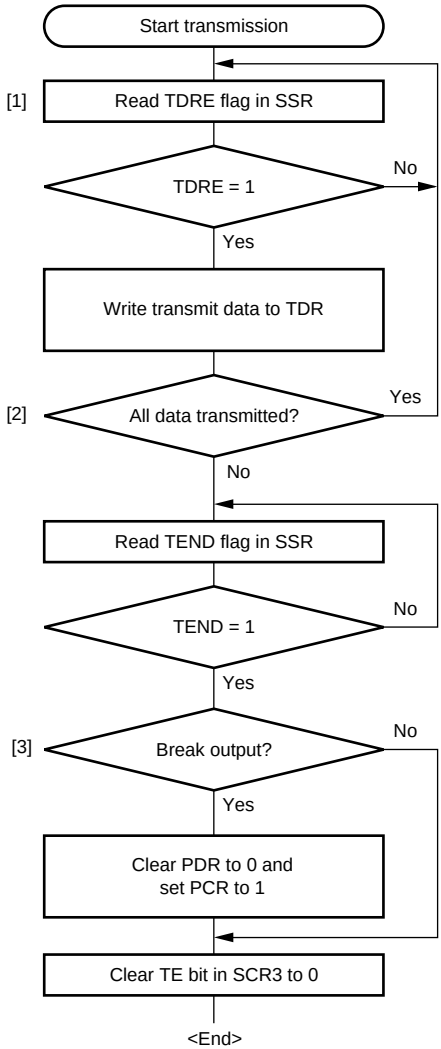

[1] Read SSR and check that the TDRE flag is set to 1, then write transmit data to TDR. When data is written to TDR, the TDRE flag is automaticaly cleared to 0.

[2] To continue serial transmission, read 1 from the TDRE flag to confirm that writing is possible, then write data to TDR. When data is written to TDR, the TDRE flag is automaticaly cleared to 0.

[3] To output a break in serial transmission, after setting PCR to 1 and PDR to 0, clear TxD in PMR1 to 0, then clear the TE bit in SCR3 to 0.

Figure 13.6 Sample Serial Transmission Flowchart (Asynchronous Mode)

13.4.4 Serial Data Reception

Figure 13.7 shows an example of operation for reception in asynchronous mode. In serial reception, the SCI operates as described below.

1. The SCI3 monitors the communication line. If a start bit is detected, the SCI3 performs internal synchronization, receives data in RSR, and checks the parity bit and stop bit.
2. If an overrun error occurs (when reception of the next data is completed while the RDRF flag is still set to 1), the OER bit in SSR is set to 1. If the RIE bit in SCR3 is set to 1 at this time, an ERI interrupt request is generated. Receive data is not transferred to RDR.
3. If a parity error is detected, the PER bit in SSR is set to 1 and receive data is transferred to RDR. If the RIE bit in SCR3 is set to 1 at this time, an ERI interrupt request is generated.
4. If a framing error is detected (when the stop bit is 0), the FER bit in SSR is set to 1 and receive data is transferred to RDR. If the RIE bit in SCR3 is set to 1 at this time, an ERI interrupt request is generated.
5. If reception is completed successfully, the RDRF bit in SSR is set to 1, and receive data is transferred to RDR. If the RIE bit in SCR3 is set to 1 at this time, an RXI interrupt request is generated. Continuous reception is possible because the RXI interrupt routine reads the receive data transferred to RDR before reception of the next receive data has been completed.

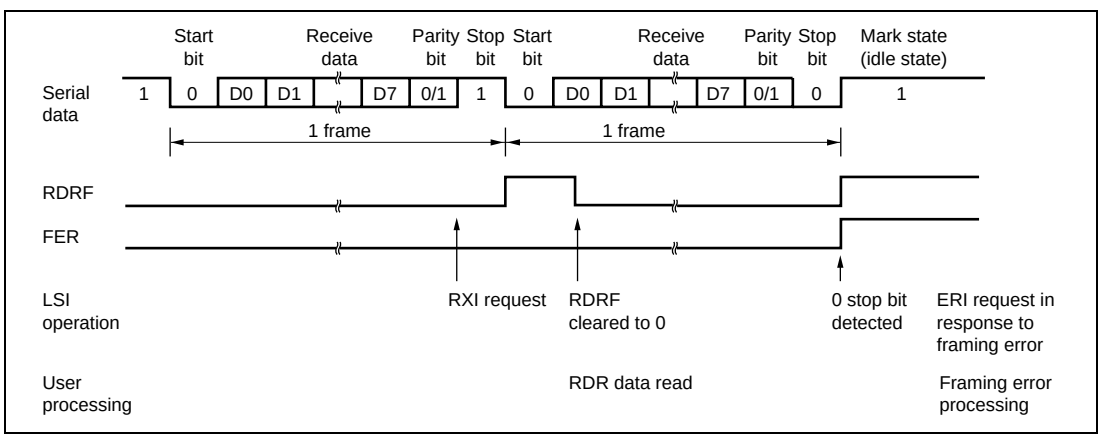

Figure 13.7 Example SCI3 Operation in Reception in Asynchronous Mode (8-Bit Data, Parity, One Stop Bit)

Table 13.5 shows the states of the SSR status flags and receive data handling when a receive error is detected. If a receive error is detected, the RDRF flag retains its state before receiving data. Reception cannot be resumed while a receive error flag is set to 1. Accordingly, clear the OER, FER, PER, and RDRF bits to 0 before resuming reception. Figure 13.8 shows a sample flowchart for serial data reception.

Table 13.5 SSR Status Flags and Receive Data Handling

SSR Status Flag					
RDRF*	**OER**	**FER**	**PER**	**Receive Data**	**Receive Error Type**
1	1	0	0	Lost	Overrun error
0	0	1	0	Transferred to RDR	Framing error
0	0	0	1	Transferred to RDR	Parity error
1	1	1	0	Lost	Overrun error + framing error
1	1	0	1	Lost	Overrun error + parity error
0	0	1	1	Transferred to RDR	Framing error + parity error
1	1	1	1	Lost	Overrun error + framing error + parity error

Note: * The RDRF flag retains the state it had before data reception.

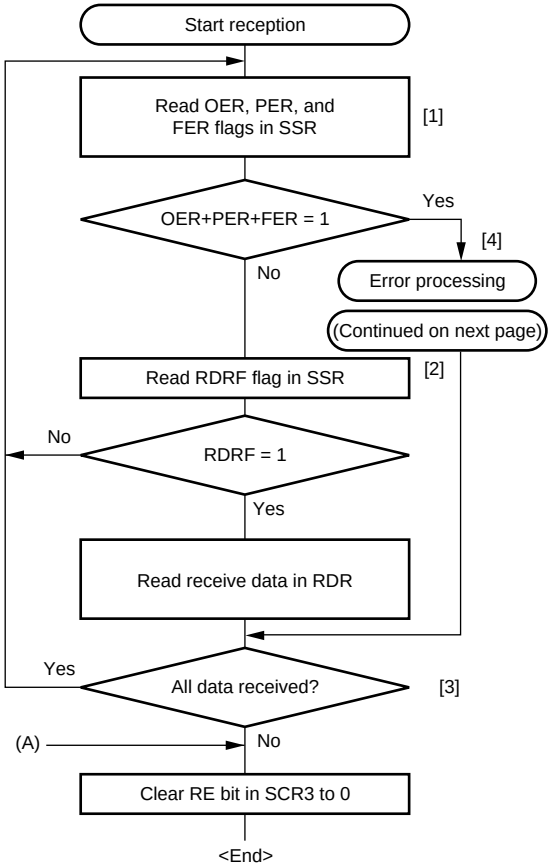

[1] Read the OER, PER, and FER flags in SSR to identify the error. If a receive error occurs, performs the appropriate error processing.

[2] Read SSR and check that RDRF = 1, then read the receive data in RDR. The RDRF flag is cleared automatically.

[3] To continue serial reception, before the stop bit for the current frame is received, read the RDRF flag and read RDR. The RDRF flag is cleared automatically.

[4] If a receive error occurs, read the OER, PER, and FER flags in SSR to identify the error. After performing the appropriate error processing, ensure that the OER, PER, and FER flags are all cleared to 0. Reception cannot be resumed if any of these flags are set to 1. In the case of a framing error, a break can be detected by reading the value of the input port corresponding to the RxD pin.

Figure 13.8 Sample Serial Data Reception Flowchart (Asynchronous mode)(1)

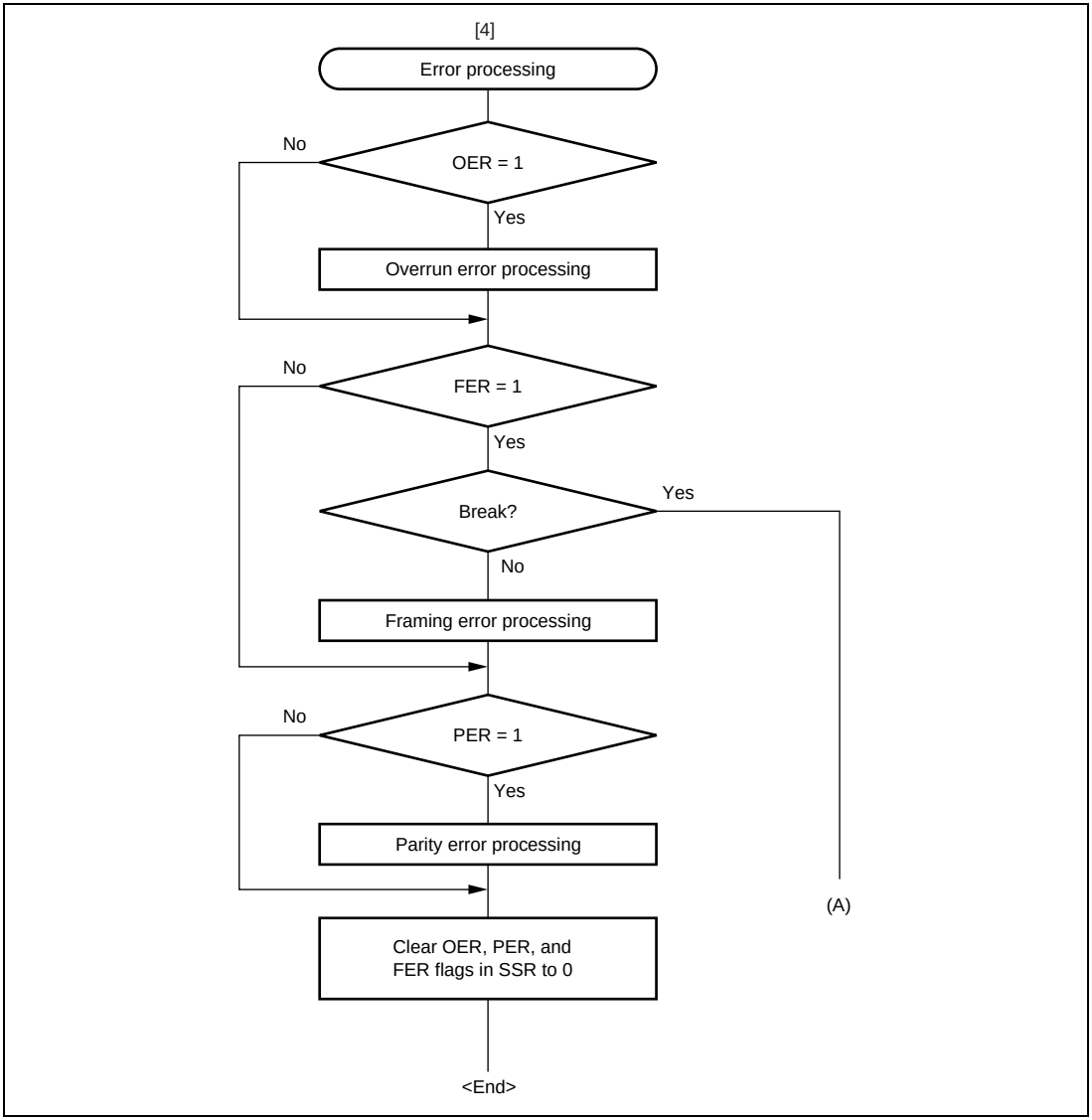

Figure 13.8 Sample Serial Reception Data Flowchart (2)

13.5 Operation in Clocked Synchronous Mode

Figure 13.9 shows the general format for clocked synchronous communication. In clocked synchronous mode, data is transmitted or received synchronous with clock pulses. A single character in the transmit data consists of the 8-bit data starting from the LSB. In clocked synchronous serial communication, data on the transmission line is output from one falling edge of the serial clock to the next. In clocked synchronous mode, the SCI3 receives data in synchronous with the rising edge of the serial clock. After 8-bit data is output, the transmission line holds the MSB state. In clocked synchronous mode, no parity or multiprocessor bit is added. Inside the SCI3, the transmitter and receiver are independent units, enabling full-duplex communication through the use of a common clock. Both the transmitter and the receiver also have a double-buffered structure, so data can be read or written during transmission or reception, enabling continuous data transfer.

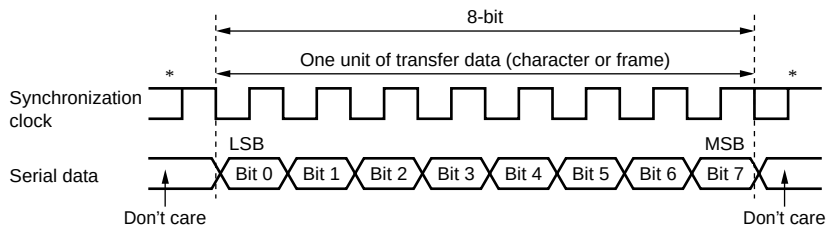

Note: * High except in continuous transfer

Figure 13.9 Data Format in Clocked Synchronous Communication

13.5.1 Clock

Either an internal clock generated by the on-chip baud rate generator or an external synchronization clock input at the SCK3 pin can be selected, according to the setting of the COM bit in SMR and CKE0 and CKE1 bits in SCR3. When the SCI3 is operated on an internal clock, the serial clock is output from the SCK3 pin. Eight serial clock pulses are output in the transfer of one character, and when no transfer is performed the clock is fixed high.

13.5.2 SCI3 Initialization

Before transmitting and receiving data, the SCI3 should be initialized as described in a sample flowchart in figure 13.4.

13.5.3 Serial Data Transmission

Figure 13.10 shows an example of SCI3 operation for transmission in clocked synchronous mode. In serial transmission, the SCI3 operates as described below.

1. The SCI3 monitors the TDRE flag in SSR, and if the flag is 0, the SCI recognizes that data has been written to TDR, and transfers the data from TDR to TSR.
2. The SCI3 sets the TDRE flag to 1 and starts transmission. If the TIE bit in SCR3 is set to 1 at this time, a transmit data empty interrupt (TXI) is generated.
3. 8-bit data is sent from the TxD pin synchronized with the output clock when output clock mode has been specified, and synchronized with the input clock when use of an external clock has been specified. Serial data is transmitted sequentially from the LSB (bit 0), from the TXD pin.
4. The SCI checks the TDRE flag at the timing for sending the MSB (bit 7).
5. If the TDRE flag is cleared to 0, data is transferred from TDR to TSR, and serial transmission of the next frame is started.
6. If the TDRE flag is set to 1, the TEND flag in SSR is set to 1, and the TDRE flag maintains the output state of the last bit. If the TEIE bit in SCR3 is set to 1 at this time, a TEI interrupt request is generated.
7. The SCK3 pin is fixed high.

Figure 13.11 shows a sample flowchart for serial data transmission. Even if the TDRE flag is cleared to 0, transmission will not start while a receive error flag (OER, FER, or PER) is set to 1. Make sure that the receive error flags are cleared to 0 before starting transmission.

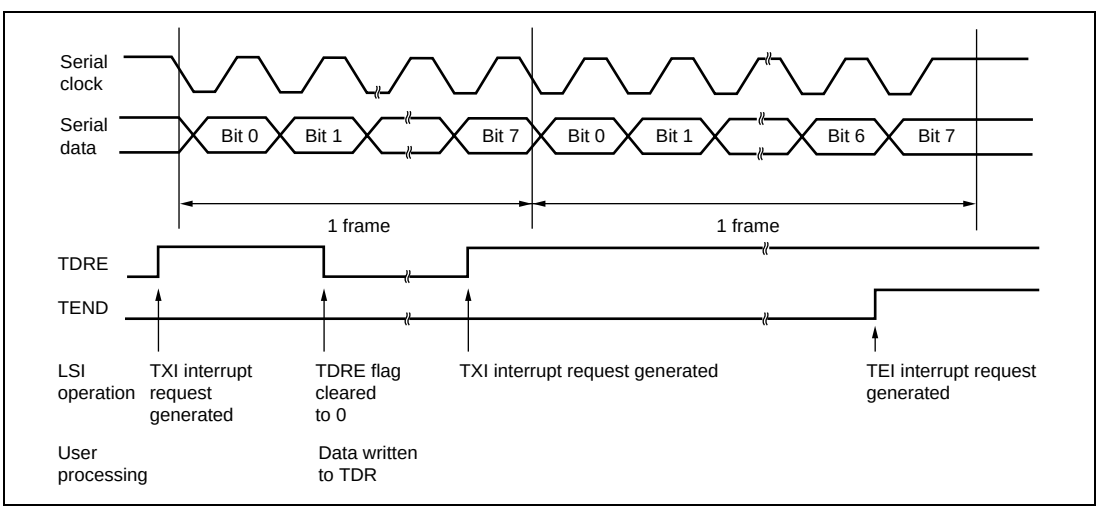

Figure 13.10 Example of SCI3 Operation in Transmission in Clocked Synchronous Mode

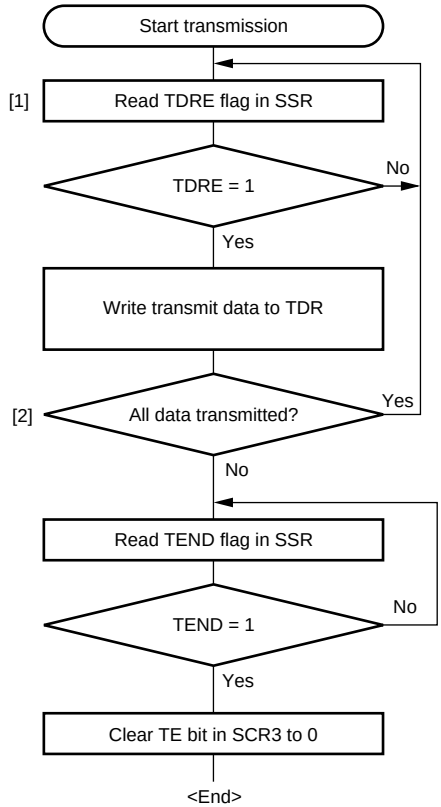

[1] Read SSR and check that the TDRE flag is set to 1, then write transmit data to TDR. When data is written to TDR, the TDRE flag is automatically cleared to 0 and clocks are output to start the data transmission.

[2] To continue serial transmission, be sure to read 1 from the TDRE flag to confirm that writing is possible, then write data to TDR. When data is written to TDR, the TDRE flag is automatically cleared to 0.

Figure 13.11 Sample Serial Transmission Flowchart (Clocked Synchronous Mode)

13.5.4 Serial Data Reception (Clocked Synchronous Mode)

Figure 13.12 shows an example of SCI3 operation for reception in clocked synchronous mode. In serial reception, the SCI3 operates as described below.

1. The SCI3 performs internal initialization synchronous with a synchronous clock input or output, starts receiving data.
2. The SCI3 stores the received data in RSR.
3. If an overrun error occurs (when reception of the next data is completed while the RDRF flag in SSR is still set to 1), the OER bit in SSR is set to 1. If the RIE bit in SCR3 is set to 1 at this time, an ERI interrupt request is generated, receive data is not transferred to RDR, and the RDRF flag remains to be set to 1.
4. If reception is completed successfully, the RDRF bit in SSR is set to 1, and receive data is transferred to RDR. If the RIE bit in SCR3 is set to 1 at this time, an RXI interrupt request is generated.

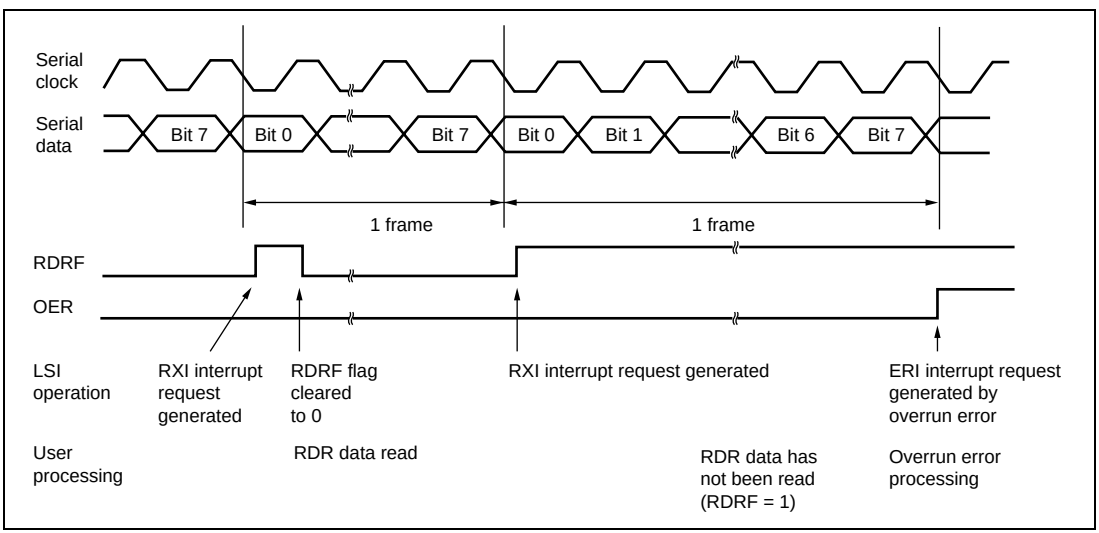

Figure 13.12 Example of SCI3 Reception Operation in Clocked Synchronous Mode

Reception cannot be resumed while a receive error flag is set to 1. Accordingly, clear the OER, FER, PER, and RDRF bits to 0 before resuming reception. Figure 13.13 shows a sample flowchart for serial data reception.

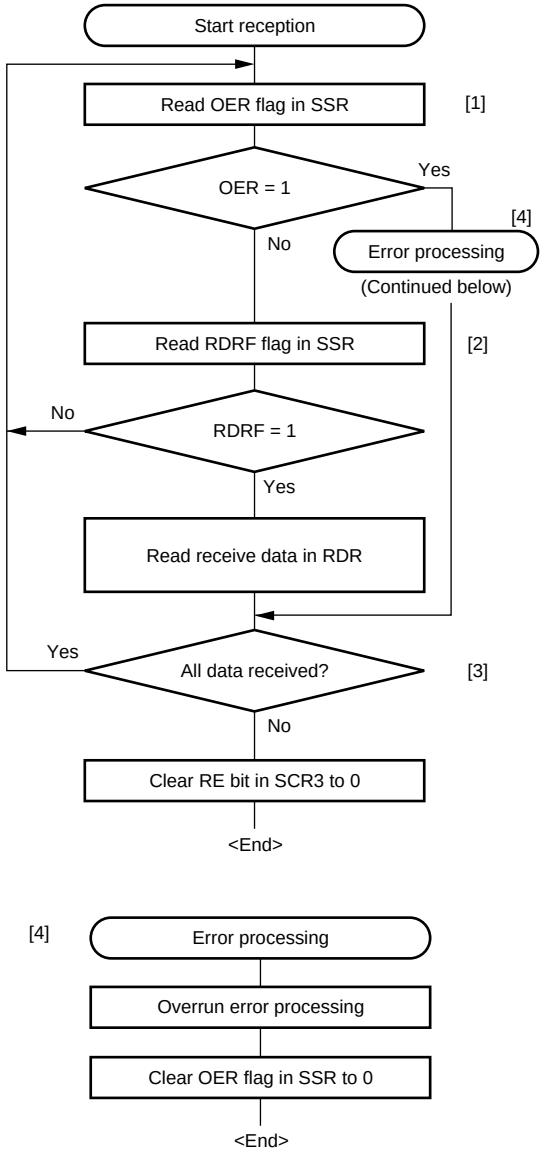

[1] Read the OER flag in SSR to determine if there is an error. If an overrun error has occurred, execute overrun error processing.

[2] Read SSR and check that the RDRF flag is set to 1, then read the receive data in RDR. When data is read from RDR, the RDRF flag is automatically cleared to 0.

[3] To continue serial reception, before the MSB (bit 7) of the current frame is received, reading the RDRF flag and reading RDR should be finished. When data is read from RDR, the RDRF flag is automatically cleared to 0.

[4] If an overrun error occurs, read the OER flag in SSR, and after performing the appropriate error processing, clear the OER flag to 0. Reception cannot be resumed if the OER flag is set to 1.

Figure 13.13 Sample Serial Reception Flowchart (Clocked Synchronous Mode)

13.5.5 Simultaneous Serial Data Transmission and Reception

Figure 13.14 shows a sample flowchart for simultaneous serial transmit and receive operations. The following procedure should be used for simultaneous serial data transmit and receive operations. To switch from transmit mode to simultaneous transmit and receive mode, after checking that the SCI3 has finished transmission and the TDRE and TEND flags are set to 1, clear TE to 0. Then simultaneously set TE and RE to 1 with a single instruction. To switch from receive mode to simultaneous transmit and receive mode, after checking that the SCI3 has finished reception, clear RE to 0. Then after checking that the RDRF and receive error flags (OER, FER, and PER) are cleared to 0, simultaneously set TE and RE to 1 with a single instruction.

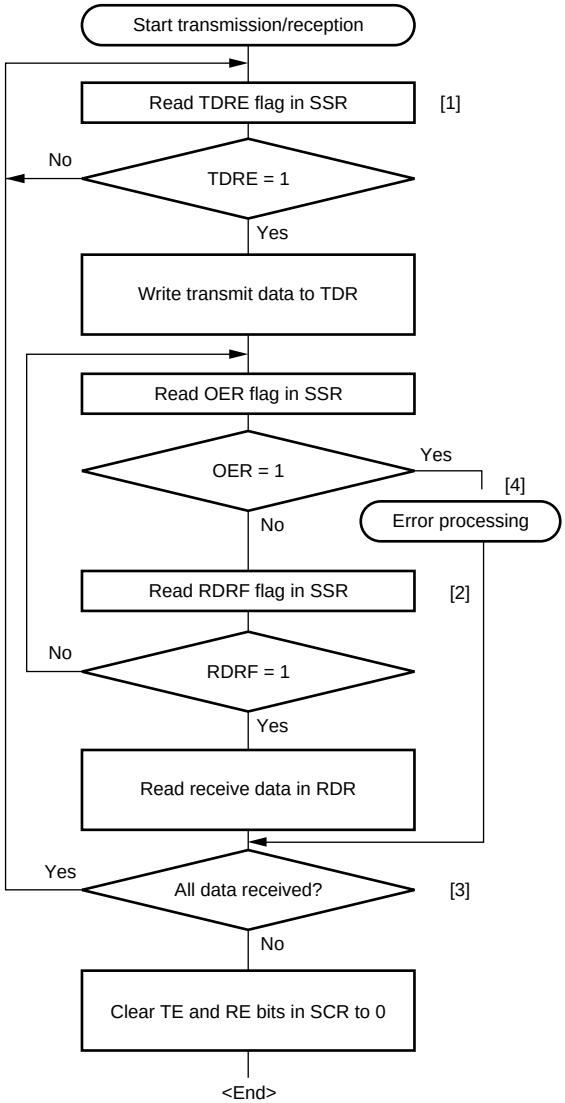

[1] Read SSR and check that the TDRE flag is set to 1, then write transmit data to TDR.
When data is written to TDR, the TDRE flag is automatically cleared to 0.

[2] Read SSR and check that the RDRF flag is set to 1, then read the receive data in RDR.
When data is read from RDR, the RDRF flag is automatically cleared to 0.

[3] To continue serial transmission/reception, before the MSB (bit 7) of the current frame is received, finish reading the RDRF flag, reading RDR. Also, before the MSB (bit 7) of the current frame is transmitted, read 1 from the TDRE flag to confirm that writing is possible. Then write data to TDR.
When data is written to TDR, the TDRE flag is automatically cleared to 0. When data is read from RDR, the RDRF flag is automatically cleared to 0.

[4] If an overrun error occurs, read the OER flag in SSR, and after performing the appropriate error processing, clear the OER flag to 0. Transmission/reception cannot be resumed if the OER flag is set to 1.
For overrun error processing, see figure 14.13.

Figure 13.14 Sample Flowchart of Simultaneous Serial Transmit and Receive Operations (Clocked Synchronous Mode)

13.6 Multiprocessor Communication Function

Use of the multiprocessor communication function enables data transfer between a number of processors sharing communication lines by asynchronous serial communication using the multiprocessor format, in which a multiprocessor bit is added to the transfer data. When multiprocessor communication is performed, each receiving station is addressed by a unique ID code. The serial communication cycle consists of two component cycles; an ID transmission cycle that specifies the receiving station, and a data transmission cycle. The multiprocessor bit is used to differentiate between the ID transmission cycle and the data transmission cycle. If the multiprocessor bit is 1, the cycle is an ID transmission cycle; if the multiprocessor bit is 0, the cycle is a data transmission cycle. Figure 13.15 shows an example of inter-processor communication using the multiprocessor format. The transmitting station first sends the ID code of the receiving station with which it wants to perform serial communication as data with a 1 multiprocessor bit added. It then sends transmit data as data with a 0 multiprocessor bit added. When data with a 1 multiprocessor bit is received, the receiving station compares that data with its own ID. The station whose ID matches then receives the data sent next. Stations whose IDs do not match continue to skip data until data with a 1 multiprocessor bit is again received.

The SCI3 uses the MPIE bit in SCR3 to implement this function. When the MPIE bit is set to 1, transfer of receive data from RSR to RDR, error flag detection, and setting the SSR status flags, RDRF, FER, and OER to 1, are inhibited until data with a 1 multiprocessor bit is received. On reception of a receive character with a 1 multiprocessor bit, the MPBR bit in SSR is set to 1 and the MPIE bit is automatically cleared, thus normal reception is resumed. If the RIE bit in SCR3 is set to 1 at this time, an RXI interrupt is generated.

When the multiprocessor format is selected, the parity bit setting is rendered invalid. All other bit settings are the same as those in normal asynchronous mode. The clock used for multiprocessor communication is the same as that in normal asynchronous mode.

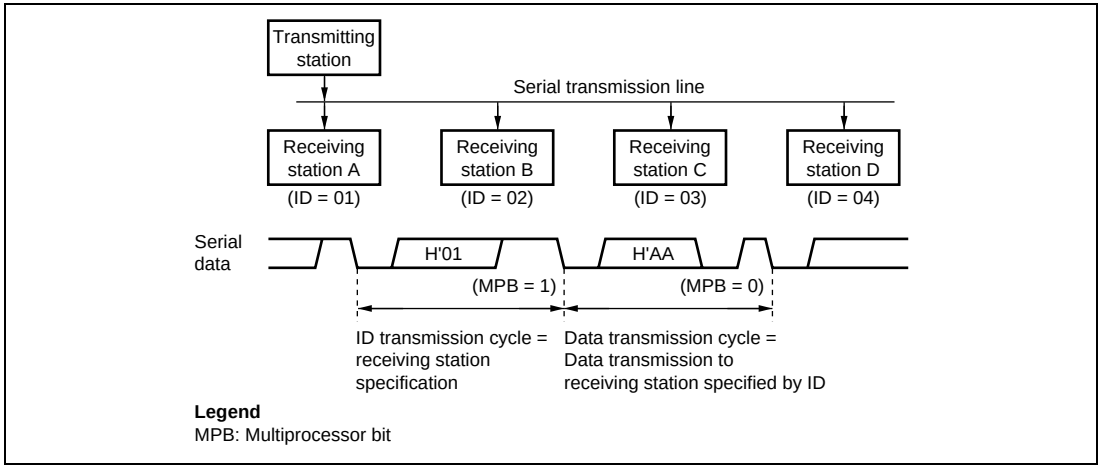

Figure 13.15 Example of Communication Using Multiprocessor Format (Transmission of Data H'AA to Receiving Station A)

13.6.1 Multiprocessor Serial Data Transmission

Figure 13.16 shows a sample flowchart for multiprocessor serial data transmission. For an ID transmission cycle, set the MPBT bit in SSR to 1 before transmission. For a data transmission cycle, clear the MPBT bit in SSR to 0 before transmission. All other SCI3 operations are the same as those in asynchronous mode.

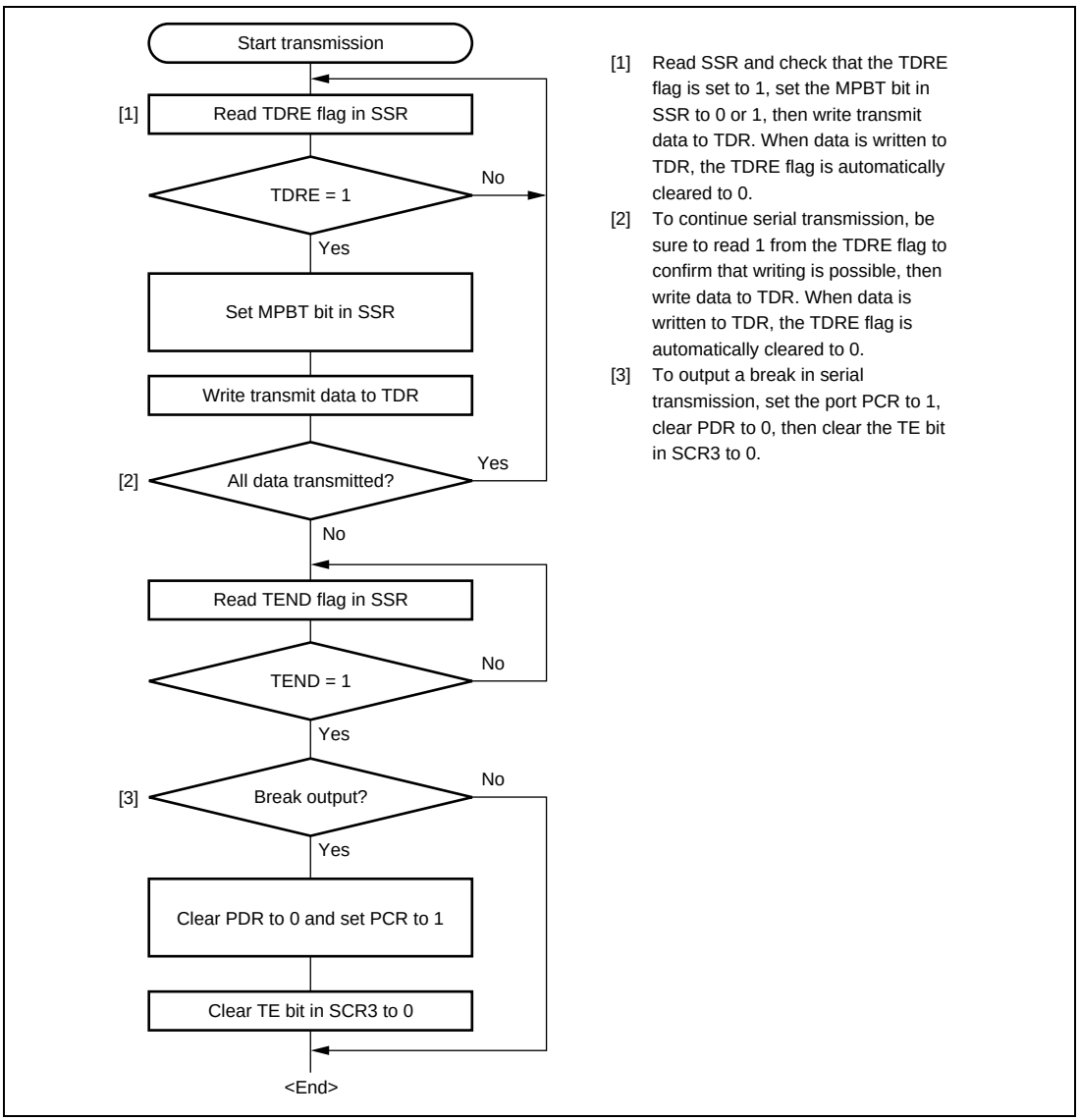

Figure 13.16 Sample Multiprocessor Serial Transmission Flowchart

13.6.2 Multiprocessor Serial Data Reception

Figure 13.17 shows a sample flowchart for multiprocessor serial data reception. If the MPIE bit in SCR3 is set to 1, data is skipped until data with a 1 multiprocessor bit is received. On receiving data with a 1 multiprocessor bit, the receive data is transferred to RDR. An RXI interrupt request is generated at this time. All other SCI3 operations are the same as in asynchronous mode. Figure 13.18 shows an example of SCI3 operation for multiprocessor format reception.

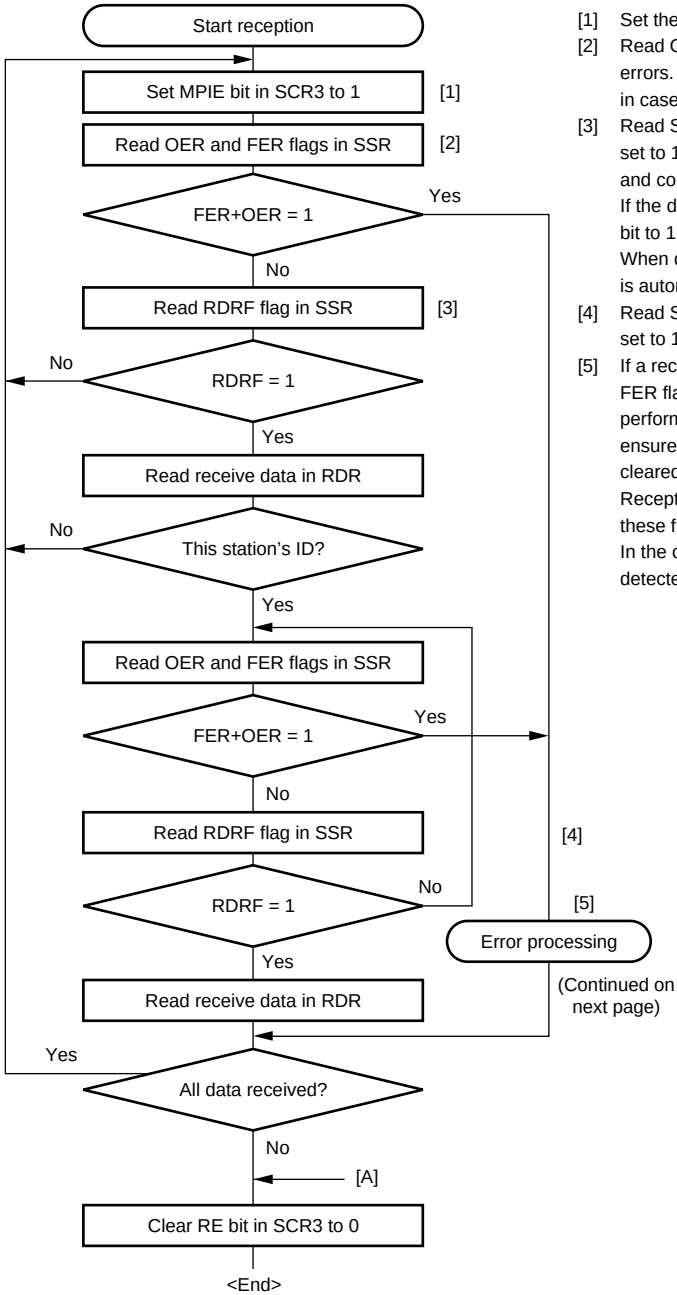

[1] Set the MPIE bit in SCR3 to 1.

[2] Read OER and FER in SSR to check for errors. Receive error processing is performed in cases where a receive error occurs.

[3] Read SSR and check that the RDRF flag is set to 1, then read the receive data in RDR and compare it with this station's ID.
If the data is not this station's ID, set the MPIE bit to 1 again.
When data is read from RDR, the RDRF flag is automatically cleared to 0.

[4] Read SSR and check that the RDRF flag is set to 1, then read the data in RDR.

[5] If a receive error occurs, read the OER and FER flags in SSR to identify the error. After performing the appropriate error processing, ensure that the OER and FER flags are all cleared to 0.
Reception cannot be resumed if either of these flags is set to 1.
In the case of a framing error, a break can be detected by reading the RxD pin value.

Figure 13.17 Sample Multiprocessor Serial Reception Flowchart (1)

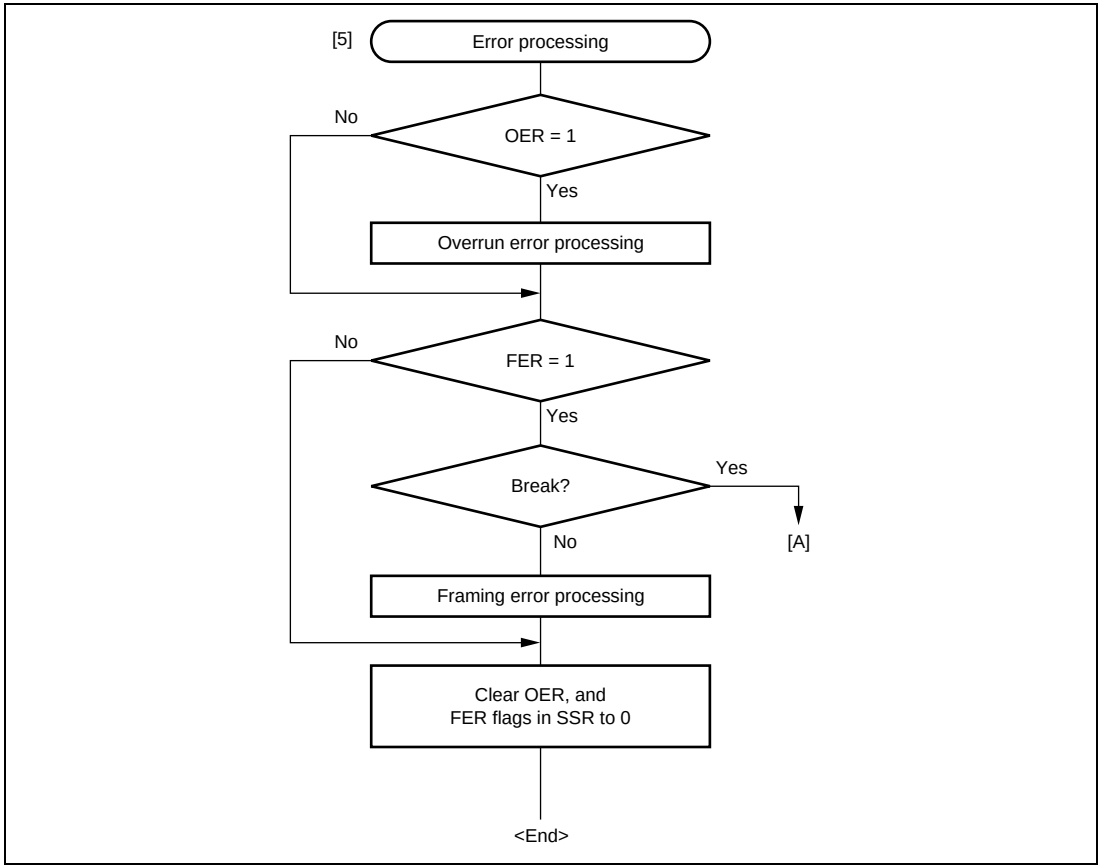

Figure 13.17 Sample Multiprocessor Serial Reception Flowchart (2)

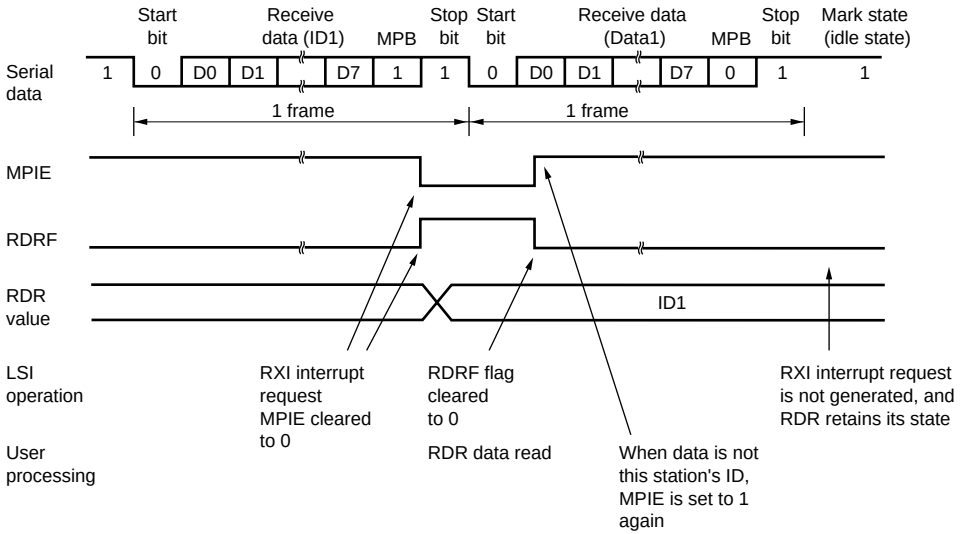

(a) When data does not match this receiver's ID

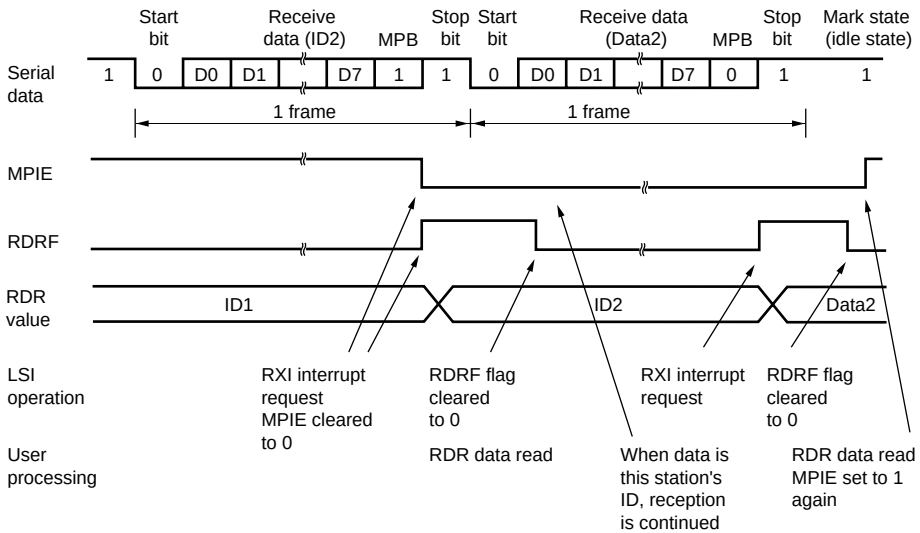

(b) When data matches this receiver's ID

Figure 13.18 Example of SCI3 Operation in Reception Using Multiprocessor Format (Example with 8-Bit Data, Multiprocessor Bit, One Stop Bit)

13.7 Interrupts

The SCI3 creates the following six interrupt requests: transmission end, transmit data empty, receive data full, and receive errors (overrun error, framing error, and parity error). Table 13.6 shows the interrupt sources.

Table 13.6 SCI3 Interrupt Requests

Interrupt Requests	Abbreviation	Interrupt Sources
Receive Data Full	RXI	Setting RDRF in SSR
Transmit Data Empty	TXI	Setting TDRE in SSR
Transmission End	TEI	Setting TEND in SSR
Receive Error	ERI	Setting OER, FER, and PER in SSR

The initial value of the TDRE flag in SSR is 1. Thus, when the TIE bit in SCR3 is set to 1 before transferring the transmit data to TDR, a TXI interrupt request is generated even if the transmit data is not ready. The initial value of the TEND flag in SSR is 1. Thus, when the TEIE bit in SCR3 is set to 1 before transferring the transmit data to TDR, a TEI interrupt request is generated even if the transmit data has not been sent. It is possible to make use of the most of these interrupt requests efficiently by transferring the transmit data to TDR in the interrupt routine. To prevent the generation of these interrupt requests (TXI and TEI), set the enable bits (TIE and TEIE) that correspond to these interrupt requests to 1, after transferring the transmit data to TDR.

13.8 Usage Notes

13.8.1 Break Detection and Processing

When framing error detection is performed, a break can be detected by reading the RxD pin value directly. In a break, the input from the RxD pin becomes all 0, setting the FER flag, and possibly the PER flag. Note that as the SCI3 continues the receive operation after receiving a break, even if the FER flag is cleared to 0, it will be set to 1 again.

13.8.2 Mark State and Break Sending

When TE is 0, the TxD pin is used as an I/O port whose direction (input or output) and level are determined by PCR and PDR. This can be used to set the TxD pin to mark state (high level) or send a break during serial data transmission. To maintain the communication line at mark state until TE is set to 1, set both PCR and PDR to 1. As TE is cleared to 0 at this point, the TxD pin becomes an I/O port, and 1 is output from the TxD pin. To send a break during serial transmission, first set PCR to 1 and PDR to 0, and then clear TE to 0. When TE is cleared to 0, the transmitter is initialized regardless of the current transmission state, the TxD pin becomes an I/O port, and 0 is output from the TxD pin.

13.8.3 Receive Error Flags and Transmit Operations (Clocked Synchronous Mode Only)

Transmission cannot be started when a receive error flag (OER, PER, or FER) is set to 1, even if the TDRE flag is cleared to 0. Be sure to clear the receive error flags to 0 before starting transmission. Note also that receive error flags cannot be cleared to 0 even if the RE bit is cleared to 0.

13.8.4 Receive Data Sampling Timing and Reception Margin in Asynchronous Mode

In asynchronous mode, the SCI3 operates on a basic clock with a frequency of 16 times the transfer rate. In reception, the SCI3 samples the falling edge of the start bit using the basic clock, and performs internal synchronization. Receive data is latched internally at the rising edge of the 8th pulse of the basic clock as shown in figure 13.19.

Thus, the reception margin in asynchronous mode is given by formula (1) below.

$$M = \left\{ (0.5 - \frac{1}{2N}) - \frac{D - 0.5}{N} - (L - 0.5)\,F \right\} \times 100(\%)$$

... Formula (1)

Where N : Ratio of bit rate to clock (N = 16)
D : Clock duty (D = 0.5 to 1.0)
L : Frame length (L = 9 to 12)
F : Absolute value of clock rate deviation

Assuming values of F (absolute value of clock rate deviation) = 0 and D (clock duty) = 0.5 in formula (1), the reception margin can be given by the formula.

$M = \{0.5 - 1/(2 \times 16)\} \times 100\ [\%] = 46.875\%$

However, this is only the computed value, and a margin of 20% to 30% should be allowed for in system design.

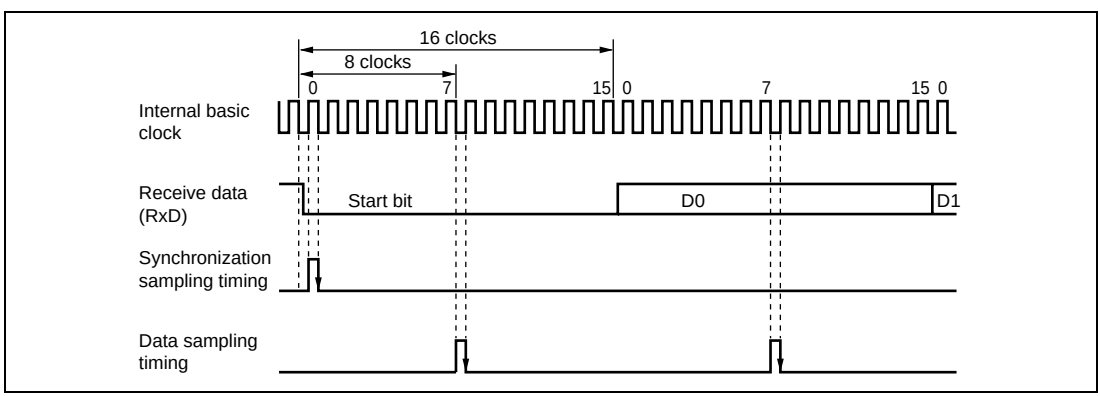

Figure 13.19 Receive Data Sampling Timing in Asynchronous Mode

Section 14 A/D Converter

This LSI includes a successive approximation type 10-bit A/D converter that allows up to four analog input channels to be selected. The block diagram of the A/D converter is shown in figure 14.1.

14.1 Features

- 10-bit resolution
- Four input channels
- Conversion time: at least 4.4 μs per channel (at 16 MHz operation)
- Two operating modes
  - — Single mode: Single-channel A/D conversion
  - — Scan mode: Continuous A/D conversion on 1 to 4 channels
- Four data registers
  - — Conversion results are held in a 16-bit data register for each channel
- Sample and hold function
- Two conversion start methods
  - — Software
  - — External trigger signal
- Interrupt request
  - — An A/D conversion end interrupt request (ADI) can be generated

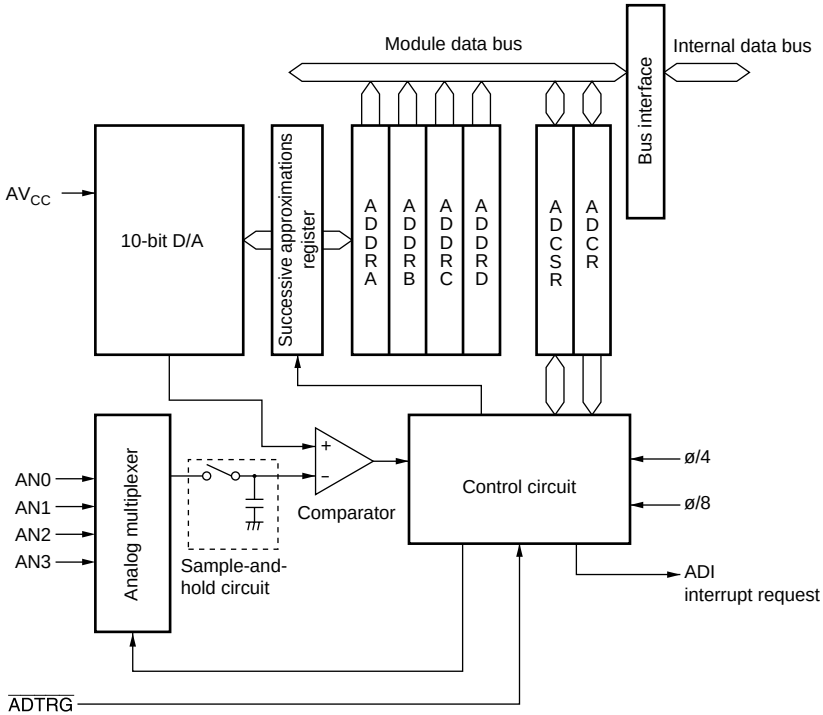

Legend

ADCR : A/D control register
ADCSR : A/D control/status register
ADDRA : A/D data register A
ADDRB : A/D data register B
ADDRC : A/D data register C
ADDRD : A/D data register D

Figure 14.1 Block Diagram of A/D Converter

14.2 Input/Output Pins

Table 14.1 summarizes the input pins used by the A/D converter.

Table 14.1 Pin Configuration

Pin Name	Symbol	I/O	Function
Analog power supply pin	AV_{CC}	Input	Analog block power supply pin
Analog input pin 0	AN0	Input	Analog input pins
Analog input pin 1	AN1	Input	
Analog input pin 2	AN2	Input	
Analog input pin 3	AN3	Input	
A/D external trigger input pin	$\overline{ADTRG}$	Input	External trigger input pin for starting A/D conversion

14.3 Register Description

The A/D converter has the following registers.

- A/D data register A (ADDRA)
- A/D data register B (ADDRB)
- A/D data register C (ADDRC)
- A/D data register D (ADDRD)
- A/D control/status register (ADCSR)
- A/D control register (ADCR)

14.3.1 A/D Data Registers A to D (ADDRA to ADDRD)

There are four 16-bit read-only ADDR registers; ADDRA to ADDRD, used to store the results of A/D conversion. The ADDR registers, which store a conversion result for each channel, are shown in table 14.2.

The converted 10-bit data is stored in bits 6 to 15. The lower 6 bits are always read as 0.

The data bus between the CPU and the A/D converter is 8 bits wide. The upper byte can be read directly from the CPU, however the lower byte should be read via a temporary register. The temporary register contents are transferred from the ADDR when the upper byte data is read. When reading ADDR, read the upper bytes only or read in word units. ADDR is initialized to H'0000.

Table 14.2 Analog Input Channels and Corresponding ADDR Registers

Analog Input Channel	A/D Data Register to Be Stored Results of A/D Conversion
AN0	ADDRA
AN1	ADDRB
AN2	ADDRC
AN3	ADDRD

14.3.2 A/D Control/Status Register (ADCSR)

ADCSR consists of the control bits and conversion end status bits of the A/D converter.

Bit	Bit Name	Initial Value	R/W	Description
7	ADF	0	R/W	A/D End Flag [Setting conditions] • When A/D conversion ends in single mode • When A/D conversion ends on all the channels selected in scan mode [Clearing conditions] • When 0 is written after reading ADF = 1
6	ADIE	0	R/W	A/D Interrupt Enable A/D conversion end interrupt (ADI) request enabled by ADF when 1 is set
5	ADST	0	R/W	A/D Start Setting this bit to 1 starts A/D conversion. In single mode, this bit is cleared to 0 automatically when conversion on the specified channel is complete. In scan mode, conversion continues sequentially on the specified channels until this bit is cleared to 0 by software, a reset, or a transition to standby mode.
4	SCAN	0	R/W	Scan Mode Selects single mode or scan mode as the A/D conversion operating mode. 0: Single mode 1: Scan mode
3	CKS	0	R/W	Clock Select Selects the A/D conversions time 0: Conversion time = 134 states (max.) 1: Conversion time = 70 states (max.) Clear the ADST bit to 0 before switching the conversion time.

Bit	Bit Name	Initial Value	R/W	Description	
2	CH2	0	R/W	Channel Select 0 to 2	
1	CH1	0	R/W	Select analog input channels.	
0	CH0	0	R/W	When SCAN = 0	When SCAN = 1
				000: AN0	000: AN0
				001: AN1	001: AN0 to AN1
				010: AN2	010: AN0 to AN2
				011: AN3	011: AN0 to AN3

14.3.3 A/D Control Register (ADCR)

ADCR enables A/D conversion started by an external trigger signal.

Bit	Bit Name	Initial Value	R/W	Description
7	TRGE	0	R/W	Trigger Enable A/D conversion is started at the falling edge and the rising edge of the external trigger signal ($\overline{\text{ADTRG}}$) when this bit is set to 1. The selection between the falling edge and rising edge of the external trigger pin ($\overline{\text{ADTRG}}$) conforms to the WPEG5 bit in the interrupt edge select register 2 (IEGR2)
6 to 1	—	All 1	—	Reserved These bits are always read as 1.
0	—	0	R/W	Reserved Do not set this bit to 1, though the bit is readable/writable.

14.4 Operation

The A/D converter operates by successive approximation with 10-bit resolution. It has two operating modes; single mode and scan mode. When changing the operating mode or analog input channel, in order to prevent incorrect operation, first clear the bit ADST to 0 in ADCSR. The ADST bit can be set at the same time as the operating mode or analog input channel is changed.

14.4.1 Single Mode

In single mode, A/D conversion is performed once for the analog input on the specified single channel as follows:

1. A/D conversion is started from the first channel when the ADST bit in ADCSR is set to 1, according to software or external trigger input.
2. When A/D conversion is completed, the result is transferred to the corresponding A/D data register to the channel.
3. On completion of conversion, the ADF bit in ADCSR is set to 1. If the ADIE bit is set to 1 at this time, an ADI interrupt request is generated.
4. The ADST bit remains set to 1 during A/D conversion. When A/D conversion ends, the ADST bit is automatically cleared to 0 and the A/D converter enters the wait state.

14.4.2 Scan Mode

In scan mode, A/D conversion is performed sequentially for the analog input on the specified channels (four channels maximum) as follows:

1. When the ADST bit is set to 1 by software, or external trigger input, A/D conversion starts on the first channel in the group.
2. When A/D conversion for each channel is completed, the result is sequentially transferred to the A/D data register corresponding to each channel.
3. When conversion of all the selected channels is completed, the ADF flag in ADCSR is set to 1. If the ADIE bit is set to 1 at this time, an ADI interrupt is requested. Conversion of the first channel in the group starts again.
4. The ADST bit is not automatically cleared to 0. Steps [2] to [3] are repeated as long as the ADST bit remains set to 1. When the ADST bit is cleared to 0, A/D conversion stops.

14.4.3 Input Sampling and A/D Conversion Time

The A/D converter has a built-in sample-and-hold circuit. The A/D converter samples the analog input when the A/D conversion start delay time (t_D) has passed after the ADST bit is set to 1, then starts conversion. Figure 14.2 shows the A/D conversion timing. Table 14.3 shows the A/D conversion time.

As indicated in figure 14.2, the A/D conversion time includes t_D and the input sampling time. The length of t_D varies depending on the timing of the write access to ADCSR. The total conversion time therefore varies within the ranges indicated in table 14.3.

In scan mode, the values given in table 14.3 apply to the first conversion time. In the second and subsequent conversions, the conversion time is 128 states (fixed) when CKS = 0 and 66 states (fixed) when CKS = 1.

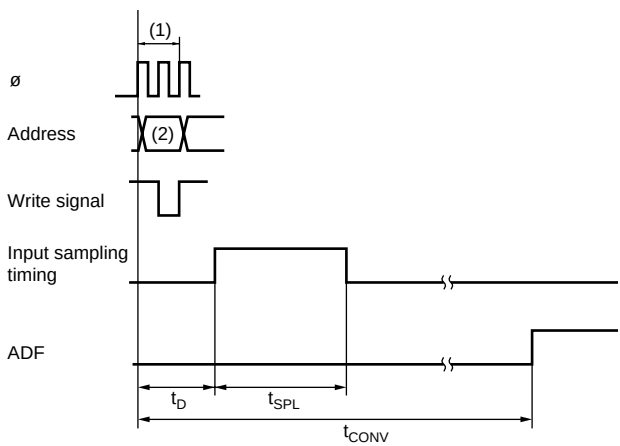

Legend
(1) : ADCSR write cycle
(2) : ADCSR address
t_D : A/D conversion start delay
t_{SPL} : Input sampling time
t_{CONV} : A/D conversion time

Figure 14.2 A/D Conversion Timing

Table 14.3 A/D Conversion Time (Single Mode)

Item	Symbol	CKS = 0			CKS = 1		
		Min	Typ	Max	Min	Typ	Max
A/D conversion start delay	t_D	6	—	9	4	—	5
Input sampling time	t_{SPL}	—	31	—	—	15	—
A/D conversion time	t_{CONV}	131	—	134	69	—	70

Note: All values represent the number of states.

14.4.4 External Trigger Input Timing

A/D conversion can also be started by an external trigger input. When the TRGE bit is set to 1 in ADCR, external trigger input is enabled at the $\overline{\text{ADTRG}}$ pin. A falling edge at the $\overline{\text{ADTRG}}$ input pin sets the ADST bit to 1 in ADCSR, starting A/D conversion. Other operations, in both single and scan modes, are the same as when the bit ADST has been set to 1 by software. Figure 14.3 shows the timing.

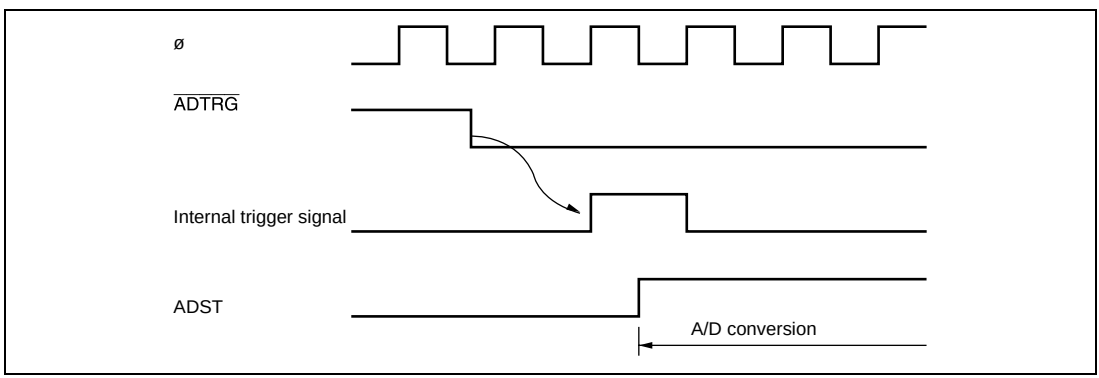

Figure 14.3 External Trigger Input Timing

14.5 A/D Conversion Accuracy Definitions

This LSI's A/D conversion accuracy definitions are given below.

- Resolution

  The number of A/D converter digital output codes
- Quantization error

  The deviation inherent in the A/D converter, given by 1/2 LSB (see figure 14.4).
- Offset error

  The deviation of the analog input voltage value from the ideal A/D conversion characteristic when the digital output changes from the minimum voltage value 0000000000 to 0000000001 (see figure 14.5).
- Full-scale error

  The deviation of the analog input voltage value from the ideal A/D conversion characteristic when the digital output changes from 1111111110 to 1111111111 (see figure 14.5).
- Nonlinearity error

  The error with respect to the ideal A/D conversion characteristics between zero voltage and full-scale voltage. Does not include offset error, full-scale error, or quantization error.
- Absolute accuracy

  The deviation between the digital value and the analog input value. Includes offset error, full-scale error, quantization error, and nonlinearity error.

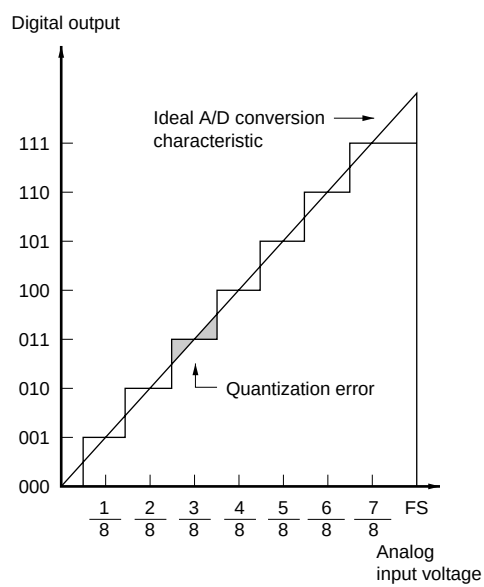

Figure 14.4 A/D Conversion Accuracy Definitions (1)

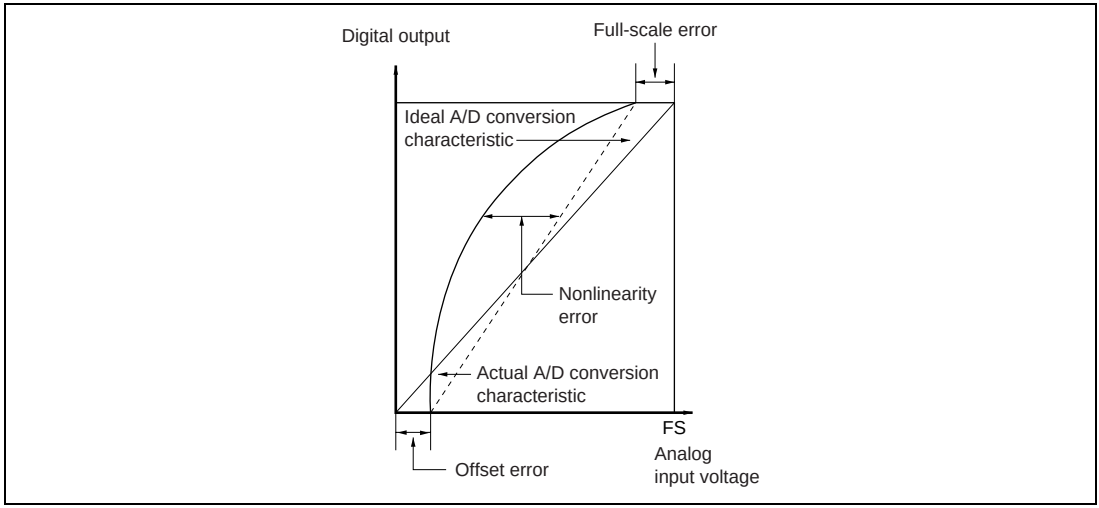

Figure 14.5 A/D Conversion Accuracy Definitions (2)

14.6 Usage Notes

14.6.1 Permissible Signal Source Impedance

This LSI's analog input is designed such that conversion accuracy is guaranteed for an input signal for which the signal source impedance is 5 kΩ or less. This specification is provided to enable the A/D converter's sample-and-hold circuit input capacitance to be charged within the sampling time; if the sensor output impedance exceeds 5 kΩ, charging may be insufficient and it may not be possible to guarantee A/D conversion accuracy. However, for A/D conversion in single mode with a large capacitance provided externally, the input load will essentially comprise only the internal input resistance of 10 kΩ, and the signal source impedance is ignored. However, as a low-pass filter effect is obtained in this case, it may not be possible to follow an analog signal with a large differential coefficient (e.g., 5 mV/μs or greater) (see figure 14.6). When converting a high-speed analog signal or converting in scan mode, a low-impedance buffer should be inserted.

14.6.2 Influences on Absolute Accuracy

Adding capacitance results in coupling with GND, and therefore noise in GND may adversely affect absolute accuracy. Be sure to make the connection to an electrically stable GND.

Care is also required to ensure that filter circuits do not interfere with digital signals or act as antennas on the mounting board.

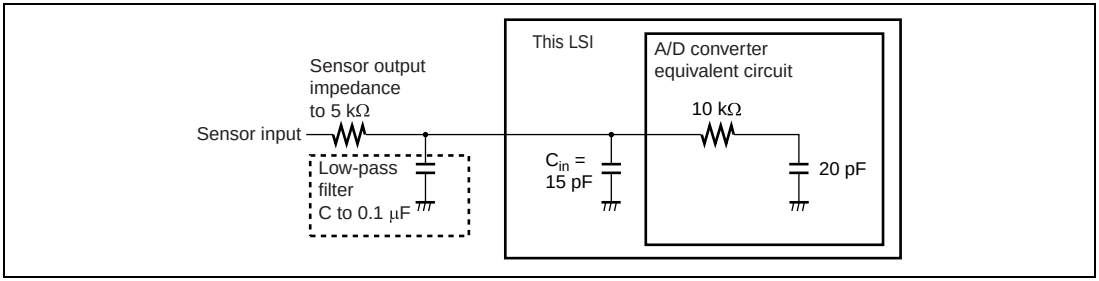

Figure 14.6 Analog Input Circuit Example

Section 15 Power Supply Circuit

This LSI incorporates an internal power supply step-down circuit. Use of this circuit enables the internal power supply to be fixed at a constant level of approximately 3.0 V, independently of the voltage of the power supply connected to the external V_{CC} pin. As a result, the current consumed when an external power supply is used at 3.0 V or above can be held down to virtually the same low level as when used at approximately 3.0 V. If the external power supply is 3.0 V or below, the internal voltage will be practically the same as the external voltage. It is, of course, also possible to use the same level of external power supply voltage and internal power supply voltage without using the internal power supply step-down circuit.

15.1 When Using Internal Power Supply Step-Down Circuit

Connect the external power supply to the V_{CC} pin, and connect a capacitance of approximately 0.1 µF between V_{CL} and V_{SS}, as shown in figure 15.1. The internal step-down circuit is made effective simply by adding this external circuit. In the external circuit interface, the external power supply voltage connected to V_{CC} and the GND potential connected to V_{SS} are the reference levels. For example, for port input/output levels, the V_{CC} level is the reference for the high level, and the V_{SS} level is that for the low level. The A/D converter analog power supply is not affected by the internal step-down circuit.

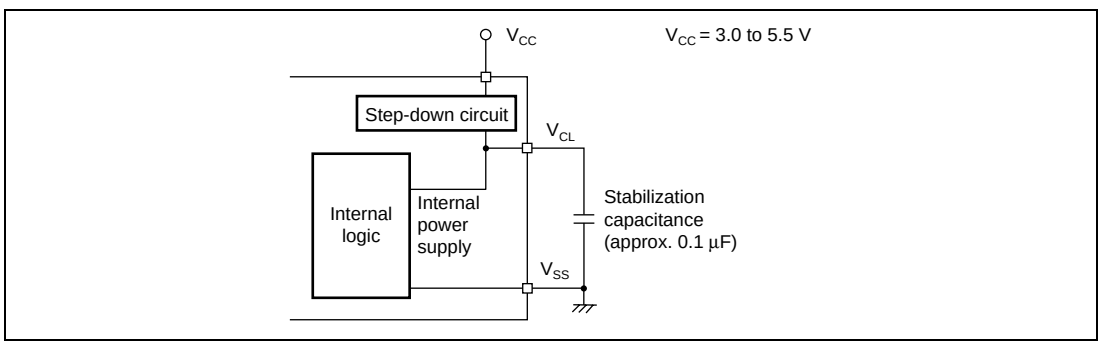

Figure 15.1 Power Supply Connection when Internal Step-Down Circuit is Used

15.2 When Not Using Internal Power Supply Step-Down Circuit

When the internal power supply step-down circuit is not used, connect the external power supply to the V_{CL} pin and V_{CC} pin, as shown in figure 15.2. The external power supply is then input directly to the internal power supply. The permissible range for the power supply voltage is 3.0 V to 3.6 V. Operation cannot be guaranteed if a voltage outside this range (less than 3.0 V or more than 3.6 V) is input.

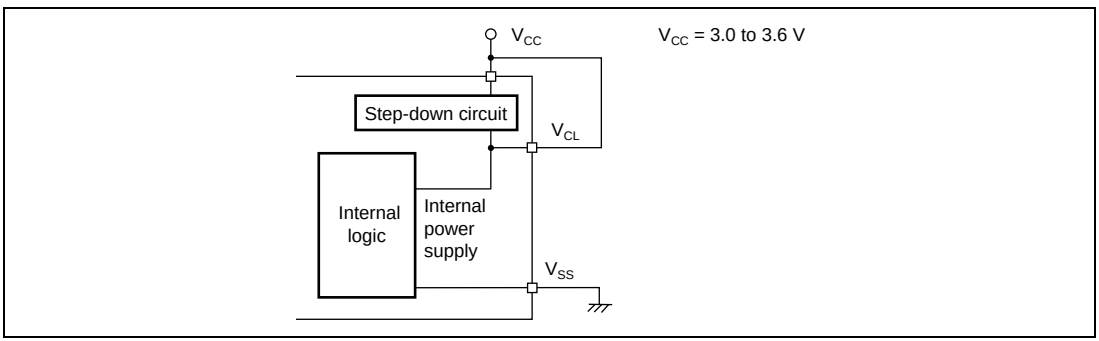

Figure 15.2 Power Supply Connection when Internal Step-Down Circuit is Not Used

Section 16 List of Registers

The register list gives information on the on-chip I/O register addresses, how the register bits are configured, and the register states in each operating mode. The information is given as shown below.

1. Register addresses (address order)

- Registers are listed from the lower allocation addresses.
- Registers are classified by functional modules.
- The data bus width is indicated.
- The number of access states is indicated.

2. Register bits

- Bit configurations of the registers are described in the same order as the register addresses.
- Reserved bits are indicated by — in the bit name column.
- When registers consist of 16 bits, bits are described from the MSB side.

3. Register states in each operating mode

- Register states are described in the same order as the register addresses.
- The register states described here are for the basic operating modes. If there is a specific reset for an on-chip peripheral module, refer to the section on that on-chip peripheral module.

16.1 Register Addresses (Address Order)

The data bus width indicates the numbers of bits by which the register is accessed.

The number of access states indicates the number of states based on the specified reference clock.

Register Name	Abbre-viation	Bit No	Address	Module Name	Data Bus Width	Access State
Timer mode register W	TMRW	8	H'FF80	Timer W	8	2
Timer control register W	TCRW	8	H'FF81	Timer W	8	2
Timer interrupt enable register W	TIERW	8	H'FF82	Timer W	8	2
Timer status register W	TSRW	8	H'FF83	Timer W	8	2
Timer I/O control register 0	TIOR0	8	H'FF84	Timer W	8	2
Timer I/O control register 1	TIOR1	8	H'FF85	Timer W	8	2
Timer counter	TCNT	16	H'FF86	Timer W	16*[1]	2
General register A	GRA	16	H'FF88	Timer W	16*[1]	2
General register B	GRB	16	H'FF8A	Timer W	16*[1]	2
General register C	GRC	16	H'FF8C	Timer W	16*[1]	2
General register D	GRD	16	H'FF8E	Timer W	16*[1]	2
Flash memory control register 1	FLMCR1	8	H'FF90	ROM	8	2
Flash memory control register 2	FLMCR2	8	H'FF91	ROM	8	2
Erase block register 1	EBR1	8	H'FF93	ROM	8	2
Flash memory enable register	FENR	8	H'FF9B	ROM	8	2
Timer control register V0	TCRV0	8	H'FFA0	Timer V	8	3
Timer control/status register V	TCSRV	8	H'FFA1	Timer V	8	3
Timer constant register A	TCORA	8	H'FFA2	Timer V	8	3
Timer constant register B	TCORB	8	H'FFA3	Timer V	8	3
Timer counter V	TCNTV	8	H'FFA4	Timer V	8	3
Timer control register V1	TCRV1	8	H'FFA5	Timer V	8	3
Serial mode register	SMR	8	H'FFA8	SCI3	8	3
Bit rate register	BRR	8	H'FFA9	SCI3	8	3
Serial control register 3	SCR3	8	H'FFAA	SCI3	8	3

Register Name	Abbre-viation	Bit No	Address	Module Name	Data Bus Width	Access State
Transmit data register	TDR	8	H'FFAB	SCI3	8	3
Serial status register	SSR	8	H'FFAC	SCI3	8	3
Receive data register	RDR	8	H'FFAD	SCI3	8	3
A/D data register A	ADDRA	16	H'FFB0	A/D converter	8	3
A/D data register B	ADDRB	16	H'FFB2	A/D converter	8	3
A/D data register C	ADDRC	16	H'FFB4	A/D converter	8	3
A/D data register D	ADDRD	16	H'FFB6	A/D converter	8	3
A/D control/status register	ADCSR	8	H'FFB8	A/D converter	8	3
A/D control register	ADCR	8	H'FFB9	A/D converter	8	3
Timer control/status register WD	TCSRWD	8	H'FFC0	WDT*[2]	8	2
Timer counter WD	TCWD	8	H'FFC1	WDT*[2]	8	2
Timer mode register WD	TMWD	8	H'FFC2	WDT*[2]	8	2
Address break control register	ABRKCR	8	H'FFC8	Address break	8	2
Address break status register	ABRKSR	8	H'FFC9	Address break	8	2
Break address register H	BARH	8	H'FFCA	Address break	8	2
Break address register L	BARL	8	H'FFCB	Address break	8	2
Break data register H	BDRH	8	H'FFCC	Address break	8	2
Break data register L	BDRL	8	H'FFCD	Address break	8	2
Port pull-up control register 1	PUCR1	8	H'FFD0	I/O port	8	2
Port pull-up control register 5	PUCR5	8	H'FFD1	I/O port	8	2
Port data register 1	PDR1	8	H'FFD4	I/O port	8	2
Port data register 2	PDR2	8	H'FFD5	I/O port	8	2
Port data register 5	PDR5	8	H'FFD8	I/O port	8	2
Port data register 7	PDR7	8	H'FFDA	I/O port	8	2
Port data register 8	PDR8	8	H'FFDB	I/O port	8	2

Register Name	Abbre-viation	Bit No	Address	Module Name	Data Bus Width	Access State
Port data register B	PDRB	8	H'FFDD	I/O port	8	2
Port mode register 1	PMR1	8	H'FFE0	I/O port	8	2
Port mode register 5	PMR5	8	H'FFE1	I/O port	8	2
Port control register 1	PCR1	8	H'FFE4	I/O port	8	2
Port control register 2	PCR2	8	H'FFE5	I/O port	8	2
Port control register 5	PCR5	8	H'FFE8	I/O port	8	2
Port control register 7	PCR7	8	H'FFEA	I/O port	8	2
Port control register 8	PCR8	8	H'FFEB	I/O port	8	2
System control register 1	SYSCR1	8	H'FFF0	Power-down	8	2
System control register 2	SYSCR2	8	H'FFF1	Power-down	8	2
Interrupt edge select register 1	IEGR1	8	H'FFF2	Interrupts	8	2
Interrupt edge select register 2	IEGR2	8	H'FFF3	Interrupts	8	2
Interrupt enable register 1	IENR1	8	H'FFF4	Interrupts	8	2
Interrupt flag register 1	IRR1	8	H'FFF6	Interrupts	8	2
Wake-up interrupt flag register	IWPR	8	H'FFF8	Interrupts	8	2
Module standby control register 1	MSTCR1	8	H'FFF9	Power-down	8	2

Notes: 1. Only word access can be used.
2. WDT: Watchdog timer

16.2 Register Bits

Register bit names of the on-chip peripheral modules are described below.

Each line covers eight bits, and 16-bit registers are shown as 2 lines.

Register Name	Bit 7	Bit 6	Bit 5	Bit 4	Bit 3	Bit 2	Bit 1	Bit 0	Module Name
TMRW	CTS	—	BUFEB	BUFEA	—	PWMD	PWMC	PWMB	Timer W
TCRW	CCLR	CKS2	CKS1	CKS0	TOD	TOC	TOB	TOA	
TIERW	OVIE	—	—	—	IMIED	IMIEC	IMIEB	IMIEA	
TSRW	OVF	—	—	—	IMFD	IMFC	IMFB	IMFA	
TIOR0	—	IOB2	IOB1	IOB0	—	IOA2	IOA1	IOA0	
TIOR1	—	IOD2	IOD1	IOD0	—	IOC2	IOC1	IOC0	
TCNT	TCNT15	TCNT14	TCNT13	TCNT12	TCNT11	TCNT10	TCNT9	TCNT8	
	TCNT7	TCNT6	TCNT5	TCNT4	TCNT3	TCNT2	TCNT1	TCNT0	
GRA	GRA15	GRA14	GRA13	GRA12	GRA11	GRA10	GRA9	GRA8	
	GRA7	GRA6	GRA5	GRA4	GRA3	GRA2	GRA1	GRA0	
GRB	GRB15	GRB14	GRB13	GRB12	GRB11	GRB10	GRB9	GRB8	
	GRB7	GRB6	GRB5	GRB4	GRB3	GRB2	GRB1	GRB0	
GRC	GRC15	GRC14	GRC13	GRC12	GRC11	GRC10	GRC9	GRC8	
	GRC7	GRC6	GRC5	GRC4	GRC3	GRC2	GRC1	GRC0	
GRD	GRD15	GRD14	GRD13	GRD12	GRD11	GRD10	GRD9	GRD8	
	GRD7	GRD6	GRD5	GRD4	GRD3	GRD2	GRD1	GRD0	
FLMCR1	—	SWE	ESU	PSU	EV	PV	E	P	ROM
FLMCR2	FLER	—	—	—	—	—	—	—	
EBR1	—	—	—	EB4	EB3	EB2	EB1	EB0	
FENR	FLSHE	—	—	—	—	—	—	—	
TCRV0	CMIEB	CMIEA	OVIE	CCLR1	CCLR0	CKS2	CKS1	CKS0	Timer V
TCSRV	CMFB	CMFA	OVF	—	OS3	OS2	OS1	OS0	
TCORA	TCORA7	TCORA6	TCORA5	TCORA4	TCORA3	TCORA2	TCORA1	TCORA0	
TCORB	TCORB7	TCORB6	TCORB5	TCORB4	TCORB3	TCORB2	TCORB1	TCORB0	
TCNTV	TCNTV7	TCNTV6	TCNTV5	TCNTV4	TCNTV3	TCNTV2	TCNTV1	TCNTV0	
TCRV1	—	—	—	TVEG1	TVEG0	TRGE	—	ICKS0	
SMR	COM	CHR	PE	PM	STOP	MP	CKS1	CKS0	SCI3
BRR	BRR7	BRR6	BRR5	BRR4	BRR3	BRR2	BRR1	BRR0	
SCR3	TIE	RIE	TE	RE	MPIE	TEIE	CKE1	CKE0	
TDR	TDR7	TDR6	TDR5	TDR4	TDR3	TDR2	TDR1	TDR0	

Register Name	Bit 7	Bit 6	Bit 5	Bit 4	Bit 3	Bit 2	Bit 1	Bit 0	Module Name
SSR	TDRE	RDRF	OER	FER	PER	TEND	MPBR	MPBT	SCI3
RDR	RDR7	RDR6	RDR5	RDR4	RDR3	RDR2	RDR1	RDR0	
ADDRA	AD9	AD8	AD7	AD6	AD5	AD4	AD3	AD2	A/D converter
	AD1	AD0	—	—	—	—	—	—	
ADDRB	AD9	AD8	AD7	AD6	AD5	AD4	AD3	AD2	
	AD1	AD0	—	—	—	—	—	—	
ADDRC	AD9	AD8	AD7	AD6	AD5	AD4	AD3	AD2	
	AD1	AD0	—	—	—	—	—	—	
ADDRD	AD9	AD8	AD7	AD6	AD5	AD4	AD3	AD2	
	AD1	AD0	—	—	—	—	—	—	
ADCSR	ADF	ADIE	ADST	SCAN	CKS	CH2	CH1	CH0	
ADCR	TRGE	—	—	—	—	—	—	—	
TCSRWD	B6WI	TCWE	B4WI	TCSRWE	B2WI	WDON	B0WI	WRST	WDT*
TCWD	TCWD7	TCWD6	TCWD5	TCWD4	TCWD3	TCWD2	TCWD1	TCWD0	
TMWD	—	—	—	—	CKS3	CKS2	CKS1	CKS0	
ABRKCR	RTINTE	CSEL1	CSEL0	ACMP2	ACMP1	ACMP0	DCMP1	DCMP0	Address break
ABRKSR	ABIF	ABIE	—	—	—	—	—	—	
BARH	BARH7	BARH6	BARH5	BARH4	BARH3	BARH2	BARH1	BARH0	
BARL	BARL7	BARL6	BARL5	BARL4	BARL3	BARL2	BARL1	BARL0	
BDRH	BDRH7	BDRH6	BDRH5	BDRH4	BDRH3	BDRH2	BDRH1	BDRH0	
BDRL	BDRL7	BDRL6	BDRL5	BDRL4	BDRL3	BDRL2	BDRL1	BDRL0	
PUCR1	PUCR17	PUCR16	PUCR15	PUCR14	—	PUCR12	PUCR11	PUCR10	I/O port
PUCR5	—	—	PUCR55	PUCR54	PUCR53	PUCR52	PUCR51	PUCR50	
PDR1	P17	P16	P15	P14	—	P12	P11	P10	
PDR2	—	—	—	—	—	P22	P21	P20	
PDR5	P57	P56	P55	P54	P53	P52	P51	P50	
PDR7	—	P76	P75	P74	—	—	—	—	
PDR8	—	—	—	P84	P83	P82	P81	P80	

Register Name	Bit 7	Bit 6	Bit 5	Bit 4	Bit 3	Bit 2	Bit 1	Bit 0	Module Name
PDRB	—	—	—	—	PB3	PB2	PB1	PB0	I/O port
PMR1	IRQ3	—	—	IRQ0	—	—	TXD	—	
PMR5	POF7	POF6	WKP5	WKP4	WKP3	WKP2	WKP1	WKP0	
PCR1	PCR17	PCR16	PCR15	PCR14	—	PCR12	PCR11	PCR10	
PCR2	—	—	—	—	—	PCR22	PCR21	PCR20	
PCR5	PCR57	PCR56	PCR55	PCR54	PCR53	PCR52	PCR51	PCR50	
PCR7	—	PCR76	PCR75	PCR74	—	—	—	—	
PCR8	—	—	—	PCR84	PCR83	PCR82	PCR81	PCR80	
SYSCR1	SSBY	STS2	STS1	STS0	—	—	—	—	Power-down
SYSCR2	SMSEL	—	DTON	MA2	MA1	MA0	—	—	
IEGR1	—	—	—	—	IEG3	—	—	IEG0	Interrupts
IEGR2	—	—	WPEG5	WPEG4	WPEG3	WPEG2	WPEG1	WPEG0	
IENR1	IENDT	—	IENWP	—	IEN3	—	—	IEN0	
IRR1	IRRDT	—	—	—	IRRI3	—	—	IRRI0	
IWPR	—	—	IWPF5	IWPF4	IWPF3	IWPF2	IWPF1	IWPF0	
MSTCR1	—	—	MSTS3	MSTAD	MSTWD	MSTTW	MSTTV	—	Power-down

Note: * WDT: Watchdog timer

16.3 Register States in Each Operating Mode

Register Name	Reset	Active	Sleep	Subsleep	Standby	Module
TMRW	Initialized	—	—	—	—	Timer W
TCRW	Initialized	—	—	—	—	
TIERW	Initialized	—	—	—	—	
TSRW	Initialized	—	—	—	—	
TIOR0	Initialized	—	—	—	—	
TIOR1	Initialized	—	—	—	—	
TCNT	Initialized	—	—	—	—	
GRA	Initialized	—	—	—	—	
GRB	Initialized	—	—	—	—	
GRC	Initialized	—	—	—	—	
GRD	Initialized	—	—	—	—	
FLMCR1	Initialized	—	—	Initialized	Initialized	ROM
FLMCR2	Initialized	—	—	Initialized	Initialized	
EBR1	Initialized	—	—	Initialized	Initialized	
FENR	Initialized	—	—	Initialized	Initialized	
TCRV0	Initialized	—	—	Initialized	Initialized	Timer V
TCSRV	Initialized	—	—	Initialized	Initialized	
TCORA	Initialized	—	—	Initialized	Initialized	
TCORB	Initialized	—	—	Initialized	Initialized	
TCNTV	Initialized	—	—	Initialized	Initialized	
TCRV1	Initialized	—	—	Initialized	Initialized	
SMR	Initialized	—	—	Initialized	Initialized	SCI3
BRR	Initialized	—	—	Initialized	Initialized	
SCR3	Initialized	—	—	Initialized	Initialized	
TDR	Initialized	—	—	Initialized	Initialized	
SSR	Initialized	—	—	Initialized	Initialized	
RDR	Initialized	—	—	Initialized	Initialized	

Register Name	Reset	Active	Sleep	Subsleep	Standby	Module
ADDRA	Initialized	—	—	Initialized	Initialized	A/D converter
ADDRB	Initialized	—	—	Initialized	Initialized	
ADDRC	Initialized	—	—	Initialized	Initialized	
ADDRD	Initialized	—	—	Initialized	Initialized	
ADCSR	Initialized	—	—	Initialized	Initialized	
ADCR	Initialized	—	—	Initialized	Initialized	
TCSRWD	Initialized	—	—	—	—	WDT*
TCWD	Initialized	—	—	—	—	
TMWD	Initialized	—	—	—	—	
ABRKCR	Initialized	—	—	—	—	Address Break
ABRKSR	Initialized	—	—	—	—	
BARH	Initialized	—	—	—	—	
BARL	Initialized	—	—	—	—	
BDRH	Initialized	—	—	—	—	
BDRL	Initialized	—	—	—	—	
PUCR1	Initialized	—	—	—	—	I/O port
PUCR5	Initialized	—	—	—	—	
PDR1	Initialized	—	—	—	—	
PDR2	Initialized	—	—	—	—	
PDR5	Initialized	—	—	—	—	
PDR7	Initialized	—	—	—	—	
PDR8	Initialized	—	—	—	—	
PDRB	Initialized	—	—	—	—	
PMR1	Initialized	—	—	—	—	
PMR5	Initialized	—	—	—	—	
PCR1	Initialized	—	—	—	—	
PCR2	Initialized	—	—	—	—	
PCR5	Initialized	—	—	—	—	
PCR7	Initialized	—	—	—	—	
PCR8	Initialized	—	—	—	—	

Register Name	Reset	Active	Sleep	Supsleep	Standby	Module
SYSCR1	Initialized	—	—	—	—	Power-down
SYSCR2	Initialized	—	—	—	—	
IEGR1	Initialized	—	—	—	—	Interrupts
IEGR2	Initialized	—	—	—	—	
IENR1	Initialized	—	—	—	—	
IRR1	Initialized	—	—	—	—	
IWPR	Initialized	—	—	—	—	
MSTCR1	Initialized	—	—	—	—	Power-down

Notes: — is not initialized

* WDT: Watchdog timer

Section 17 Electrical Characteristics

17.1 Absolute Maximum Ratings

Table 17.1 Absolute Maximum Ratings

Item		Symbol	Value	Unit	Note
Power supply voltage		V_{CC}	–0.3 to +7.0	V	*
Analog power supply voltage		AV_{CC}	–0.3 to +7.0	V	
Input voltage	Ports other than Port B	V_{IN}	–0.3 to V_{CC} +0.3	V	
	Port B		–0.3 to AV_{CC} +0.3	V	
Operating temperature		T_{opr}	–20 to +75	°C	
Storage temperature		T_{stg}	–55 to +125	°C	

Note: * Permanent damage may result if maximum ratings are exceeded. Normal operation should be under the conditions specified in Electrical Characteristics. Exceeding these values can result in incorrect operation and reduced reliability.

17.2 Electrical Characteristics

17.2.1 Power Supply Voltage and Operating Ranges

Power Supply Voltage and Oscillation Frequency Range

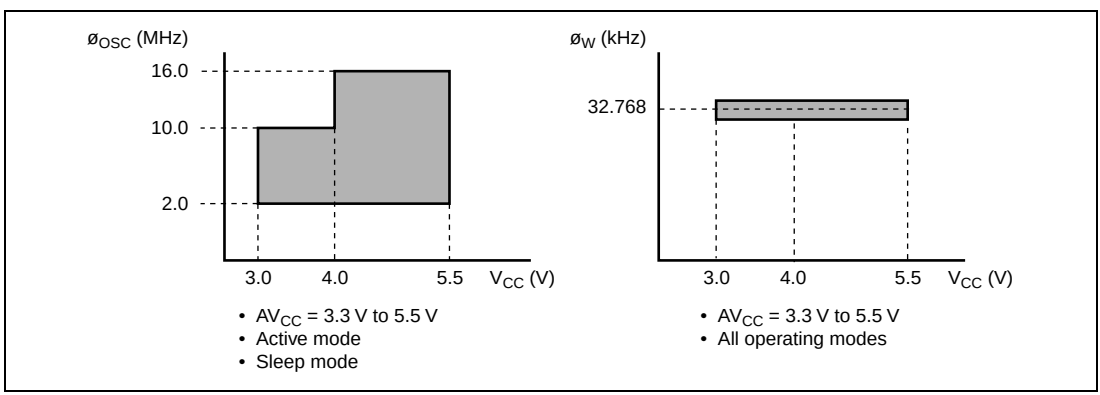

Power Supply Voltage and Operating Frequency Range

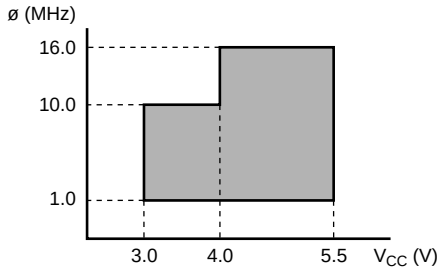

- AV_{CC} = 3.3 V to 5.5 V
- Active mode
- Sleep mode
  (When MA2 = 0 in SYSCR2)

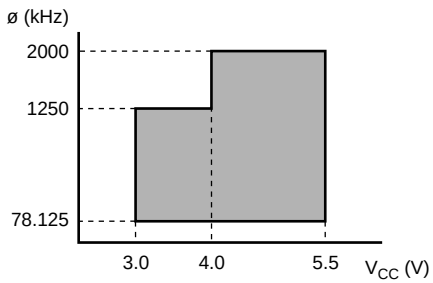

- AV_{CC} = 3.3 V to 5.5 V
- Active mode
- Sleep mode
  (When MA2 = 1 in SYSCR2)

Analog Power Supply Voltage and A/D Converter Accuracy Guarantee Range

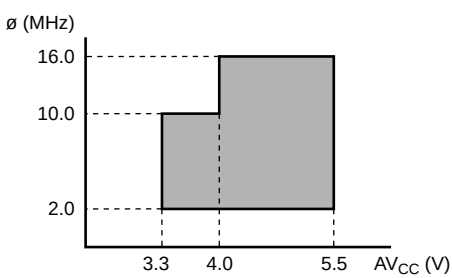

- V_{CC} = 3.0 V to 5.5 V
- Active mode
- Sleep mode

17.2.2 DC Characteristics

Table 17.2 DC Characteristics (1)

V_{CC} = 3.0 V to 5.5 V, V_{SS} = 0.0 V, T_a = –20°C to +75°C unless otherwise indicated.

Item	Symbol	Applicable Pins	Test Condition	Values Min	Values Typ	Values Max	Unit	Notes
Input high voltage	V_{IH}	$\overline{RES}$, $\overline{WKP0}$ to $\overline{WKP5}$, $\overline{IRQ0}$ to $\overline{IRQ3}$, $\overline{ADTRG}$,TMRIV, TMCIV, FTCI, FTIOA to FTIOD, SCK3, TRGV	V_{cc} = 4.0 V to 5.5 V	$V_{cc} \times 0.8$	—	V_{cc} + 0.3	V	
				$V_{cc} \times 0.9$	—	V_{cc} + 0.3		
		RXD, P12 to P10, P17 to P14, P22 to P20, P57 to P50, P76 to P74, P84 to P80	V_{cc} = 4.0 V to 5.5 V	$V_{cc} \times 0.7$	—	V_{cc} + 0.3	V	
				$V_{cc} \times 0.8$	—	V_{cc} + 0.3		
		PB3 to PB0	V_{cc} = 4.0 V to 5.5 V	$V_{cc} \times 0.7$	—	AV_{cc} + 0.3	V	
				$V_{cc} \times 0.8$	—	AV_{cc} + 0.3		
		OSC1	V_{cc} = 4.0 V to 5.5 V	V_{cc} – 0.5	—	V_{cc} + 0.3	V	
				V_{cc} – 0.3	—	V_{cc} + 0.3		
Input low voltage	V_{IL}	$\overline{RES}$, $\overline{WKP0}$ to $\overline{WKP5}$, $\overline{IRQ0}$, $\overline{IRQ3}$, $\overline{ADTRG}$,TMRIV, TMCIV, FTCI, FTIOA to FTIOD, SCK3, TRGV	V_{cc} = 4.0 V to 5.5 V	–0.3	—	$V_{cc} \times 0.2$	V	
				–0.3	—	$V_{cc} \times 0.1$		
		RXD, P12 to P10, P17 to P14, P22 to P20, P57 to P50, P76 to P74, P84 to P80, PB3 to PB0	V_{cc} = 4.0 V to 5.5 V	–0.3	—	$V_{cc} \times 0.3$	V	
				–0.3	—	$V_{cc} \times 0.2$		
		OSC1	V_{cc} = 4.0 V to 5.5 V	–0.3	—	0.5	V	
				–0.3	—	0.3		

Item	Symbol	Applicable Pins	Test Condition	Values Min	Values Typ	Values Max	Unit	Notes
Output high voltage	V_{OH}	P12 to P10, P17 to P14, P22 to P20, P57 to P50, P76 to P74, P84 to P80	V_{CC} = 4.0 V to 5.5 V $-I_{OH}$ = 1.5 mA	V_{CC} – 1.0	—	—	V	
			$-I_{OH}$ = 0.1 mA	V_{CC} – 0.5	—	—		
Output low voltage	V_{OL}	P12 to P10, P17 to P14, P22 to P20, P55 to P50, P76 to P74	V_{CC} = 4.0 V to 5.5 V I_{OL} = 1.6 mA	—	—	0.6	V	
			I_{OL} = 0.4 mA	—	—	0.4		
		P84 to P80	V_{CC} = 4.0 V to 5.5 V I_{OL} = 20.0 mA	—	—	1.5	V	
			V_{CC} = 4.0 V to 5.5 V I_{OL} = 10.0 mA	—	—	1.0		
			V_{CC} = 4.0 V to 5.5 V I_{OL} = 1.6 mA	—	—	0.4		
			I_{OL} = 0.4 mA	—	—	0.4		

Item	Symbol	Applicable Pins	Test Condition	Values Min	Typ	Max	Unit	Notes
Input/ output leakage current	$\lvert I_{IL} \rvert$	OSC1, $\overline{RES}$, $\overline{WKP0}$ to $\overline{WKP5}$, $\overline{IRQ0}$, $\overline{IRQ3}$, $\overline{ADTRG}$, TRGV, TMRIV, TMCIV, FTCI, FTIOA to FTIOD, RXD, SCK3	V_{IN} = 0.5 V or higher (V_{CC} – 0.5 V)	—	—	1.0	µA	
		P12 to P10, P17 to P14, P22 to P20, P57 to P50, P76 to P74, P84 to P80	V_{IN} = 0.5 V or higher (V_{CC} – 0.5 V)	—	—	1.0	µA	
		PB3 to PB0	V_{IN} = 0.5 V or higher (AV_{CC} – 0.5 V)	—	—	1.0	µA	
Pull-up MOS current	$-I_p$	P12 to P10, P17 to P14, P55 to P50	V_{CC} = 5.0 V, V_{IN} = 0.0 V	50.0	—	300.0	µA	
			V_{CC} = 3.0 V, V_{IN} = 0.0 V	—	60.0	—		Reference value
Input capacitance	C_{in}	All input pins except power supply pins	f = 1 MHz, V_{IN} = 0.0 V, T_a = 25°C	—	—	15.0	pF	
Active mode current consumption	I_{OPE1}	V_{CC}	Active mode 1 V_{CC} = 5.0 V, f_{OSC} = 16 MHz	—	15.0	22.5	mA	*
			Active mode 1 V_{CC} = 3.0 V, f_{OSC} = 10 MHz	—	8.0	—		* Reference value
	I_{OPE2}	V_{CC}	Active mode 2 V_{CC} = 5.0 V, f_{OSC} = 16 MHz	—	1.8	2.7	mA	*
			Active mode 2 V_{CC} = 3.0 V, f_{OSC} = 10 MHz	—	1.2	—		* Reference value

Item	Symbol	Applicable Pins	Test Condition	Values Min	Values Typ	Values Max	Unit	Notes
Sleep mode current consumption	I_{SLEEP1}	V_{CC}	Sleep mode 1 V_{CC} = 5.0 V, f_{OSC} = 16 MHz	—	11.5	17.0	mA	*
			Sleep mode 1 V_{CC} = 3.0 V, f_{OSC} = 10 MHz	—	6.5	—		* Reference value
	I_{SLEEP2}	V_{CC}	Sleep mode 2 V_{CC} = 5.0 V, f_{OSC} = 16 MHz	—	1.7	2.5	mA	*
			Sleep mode 2 V_{CC} = 3.0 V, f_{OSC} = 10 MHz	—	1.1	—		* Reference value
Standby mode current consumption	I_{STBY}	V_{CC}	32-kHz crystal resonator not used	—	—	5.0	µA	*
RAM data retaining voltage	V_{RAM}	V_{CC}		2.0	—	—	V	

Note: * Pin states during current consumption measurement are given below (excluding current in the pull-up MOS transistors and output buffers).

Mode	$\overline{RES}$ Pin	Internal State	Other Pins	Oscillator Pins
Active mode 1	V_{CC}	Operates	V_{CC}	Main clock: ceramic or crystal resonator
Active mode 2		Operates (ø/64)		
Sleep mode 1	V_{CC}	Only timers operate	V_{CC}	
Sleep mode 2		Only timers operate (ø/64)		
Standby mode	V_{CC}	CPU and timers both stop	V_{CC}	Main clock: ceramic or crystal resonator

Table 17.2 DC Characteristics (2)

V_{CC} = 3.0 V to 5.5 V, V_{SS} = 0.0 V, T_a = –20°C to +75°C, unless otherwise indicated.

Item	Symbol	Applicable Pins	Test Condition	Values Min	Values Typ	Values Max	Unit
Allowable output low current (per pin)	I_{OL}	Output pins except port 8	V_{CC} = 4.0 V to 5.5 V	—	—	2.0	mA
		Port 8		—	—	20.0	mA
		Port 8		—	—	10.0	mA
		Output pins except port 8		—	—	0.5	mA
Allowable output low current (total)	ΣI_{OL}	Output pins except port 8	V_{CC} = 4.0 V to 5.5 V	—	—	40.0	mA
		Port 8		—	—	80.0	mA
		Output pins except port 8		—	—	20.0	mA
		Port 8		—	—	40.0	mA
Allowable output high current (per pin)	$\lvert -I_{OH} \rvert$	All output pins	V_{CC} = 4.0 V to 5.5 V	—	—	2.0	mA
				—	—	0.2	mA
Allowable output high current (total)	$\lvert -\Sigma -I_{OH} \rvert$	All output pins	V_{CC} = 4.0 V to 5.5 V	—	—	30.0	mA
				—	—	8.0	mA

17.2.3 AC Characteristics

Table 17.3 AC Characteristics

V_{CC} = 3.0 V to 5.5 V, V_{SS} = 0.0 V, T_a = –20°C to +75°C, unless otherwise specified.

Item	Symbol	Applicable Pins	Test Condition	Values Min	Values Typ	Values Max	Unit	Reference Figure
System clock oscillation frequency	f_{OSC}	OSC1, OSC2	V_{CC} = 4.0 V to 5.5 V	2.0	—	16.0	MHz	*[1]
				2.0	—	10.0	MHz	
System clock (ø) cycle time	t_{cyc}			1	—	64	t_{OSC}	*[2]
				—	—	12.8	µs	
Instruction cycle time				2	—	—	t_{cyc}	
Oscillation stabilization time (crystal resonator)	t_{rc}	OSC1, OSC2		—	—	10.0	ms	
Oscillation stabilization time (ceramic resonator)	t_{rc}	OSC1, OSC2		—	—	5.0	ms	
External clock high width	t_{CPH}	OSC1	V_{CC} = 4.0 V to 5.5 V	25.0	—	—	ns	Figure 17.1
				40.0	—	—	ns	
External clock low width	t_{CPL}	OSC1	V_{CC} = 4.0 V to 5.5 V	25.0	—	—	ns	
				40.0	—	—	ns	
External clock rise time	t_{CPr}	OSC1	V_{CC} = 4.0 V to 5.5 V	—	—	10.0	ns	
				—	—	15.0	ns	
External clock fall time	t_{CPf}	OSC1	V_{CC} = 4.0 V to 5.5 V	—	—	10.0	ns	
				—	—	15.0	ns	

Item	Symbol	Applicable Pins	Test Condition	Values Min	Values Typ	Values Max	Unit	Reference Figure
$\overline{\text{RES}}$ pin low width	t_{REL}	$\overline{\text{RES}}$	At power-on and in modes other than those below	t_{rc}	—	—	ms	Figure 17.2
			In active mode and sleep mode operation	10	—	—	t_{cyc}	
Input pin high width	t_{IH}	$\overline{\text{IRQ0}}$, $\overline{\text{IRQ3}}$, $\overline{\text{WKP0}}$ to $\overline{\text{WKP5}}$, TMCIV, TMRIV, TRGV, $\overline{\text{ADTRG}}$, FTCI, FTIOA to FTIOD		2	—	—	t_{cyc}	Figure 17.3
Input pin low width	t_{IL}	$\overline{\text{IRQ0}}$, $\overline{\text{IRQ3}}$, $\overline{\text{WKP0}}$ to $\overline{\text{WKP5}}$, TMCIV, TMRIV, TRGV, $\overline{\text{ADTRG}}$, FTCI, FTIOA to FTIOD		2	—	—	t_{cyc}	

Notes: 1. When an external clock is input, the minimum system clock oscillator frequency is 1.0 MHz.

2. Determined by MA2 to MA0 in system control register 2 (SYSCR2).

Table 17.4 Serial Interface (SCI3) Timing

V_{CC} = 3.0 V to 5.5 V, V_{SS} = 0.0 V, T_a = –20°C to +75°C, unless otherwise specified.

Item		Symbol	Applicable Pins	Test Condition	Values Min	Values Typ	Values Max	Unit	Reference Figure
Input clock cycle	Asynchronous	t_{Scyc}	SCK3		4	—	—	t_{cyc}	Figure 17.4
	Clocked synchronous				6	—	—	t_{cyc}	
Input clock pulse width		t_{SCKW}	SCK3		0.4	—	0.6	t_{Scyc}	
Transmit data delay time (clocked synchronous)		t_{TXD}	TXD	V_{CC} = 4.0 V to 5.5 V	—	—	1	t_{cyc}	Figure 17.5
					—	—	1	t_{cyc}	
Receive data setup time (clocked synchronous)		t_{RXS}	RXD	V_{CC} = 4.0 V to 5.5 V	62.5	—	—	ns	
					100.0	—	—	ns	
Receive data hold time (clocked synchronous)		t_{RXH}	RXD	V_{CC} = 4.0 V to 5.5 V	62.5	—	—	ns	
					100.0	—	—	ns	

17.2.4 A/D Converter Characteristics

Table 17.5 A/D Converter Characteristics

V_{CC} = 3.0 V to 5.5 V, V_{SS} = 0.0 V, T_a = –20°C to +75°C, unless otherwise specified.

Item	Symbol	Applicable Pins	Test Condition	Values Min	Values Typ	Values Max	Unit	Reference Figure
Analog power supply voltage	AV_{CC}	AV_{CC}		3.3	V_{CC}	5.5	V	*[1]
Analog input voltage	AV_{IN}	AN3 to AN0		V_{SS} – 0.3	—	AV_{CC} + 0.3	V	
Analog power supply current	AI_{OPE}	AV_{CC}	AV_{CC} = 5.0 V f_{OSC} = 16 MHz	—	—	2.0	mA	
	AI_{STOP1}	AV_{CC}		—	50	—	μA	*[2] Reference value
	AI_{STOP2}	AV_{CC}		—	—	5.0	μA	*[3]
Analog input capacitance	C_{AIN}	AN3 to AN0		—	—	30.0	pF	
Allowable signal source impedance	R_{AIN}	AN3 to AN0		—	—	5.0	kΩ	
Resolution (data length)				10	10	10	bit	
Conversion time (single mode)			AV_{CC} = 3.3 V to 5.5 V	134	—	—	t_{cyc}	
Nonlinearity error				—	—	±7.5	LSB	
Offset error				—	—	±7.5	LSB	
Full-scale error				—	—	±7.5	LSB	
Quantization error				—	—	±0.5	LSB	
Absolute accuracy				—	—	±8.0	LSB	
Conversion time (single mode)			AV_{CC} = 4.0 V to 5.5 V	70	—	—	t_{cyc}	
Nonlinearity error				—	—	±7.5	LSB	
Offset error				—	—	±7.5	LSB	
Full-scale error				—	—	±7.5	LSB	
Quantization error				—	—	±0.5	LSB	
Absolute accuracy				—	—	±8.0	LSB	

Item	Symbol	Applicable Pins	Test Condition	Values Min	Typ	Max	Unit	Reference Figure
Conversion time (single mode)			AV_{CC} = 4.0 V to 5.5 V	134	—	—	t_{cyc}	
Nonlinearity error				—	—	±3.5	LSB	
Offset error				—	—	±3.5	LSB	
Full-scale error				—	—	±3.5	LSB	
Quantization error				—	—	±0.5	LSB	
Absolute accuracy				—	—	±4.0	LSB	

Notes: 1. Set $AV_{CC} = V_{CC}$ when the A/D converter is not used.
2. AI_{STOP1} is the current in active and sleep modes while the A/D converter is idle.
3. AI_{STOP2} is the current at reset and in standby and subsleep modes while the A/D converter is idle.

17.2.5 Watchdog Timer

Table 17.6 Watchdog Timer Characteristics

V_{CC} = 3.0 V to 5.5 V, V_{SS} = 0.0 V, T_a = –20°C to +75°C, unless otherwise specified.

Item	Symbol	Applicable Pins	Test Condition	Values Min	Typ	Max	Unit	Reference Figure
On-chip oscillator overflow time	t_{OVF}			0.2	0.4	—	s	*

Note: * Shows the time to count from 0 to 255, at which point an internal reset is generated, when the internal oscillator is selected.

17.2.6 Flash Memory Characteristics (Preliminary)

Table 17.7 Flash Memory Characteristics (Preliminary)

V_{CC} = 3.0 V to 5.5 V, V_{SS} = 0.0 V, T_a = –20°C to +75°C, unless otherwise specified.

Item		Symbol	Test Condition	Values Min	Values Typ	Values Max	Unit
Programming time (per 128 bytes)*1*2*4		t_P		—	7	—	ms
Erase time (per block) *1*3*6		t_E		—	100	—	ms
Reprogramming count		N_{WEC}		—	—	1000	Times
Programming	Wait time after SWE bit setting*1	x		1	—	—	µs
	Wait time after PSU bit setting*1	y		50	—	—	µs
	Wait time after P bit setting *1*4	z1	1 ≤ n ≤ 6	28	30	32	µs
		z2	7 ≤ n ≤ 1000	198	200	202	µs
		z3	Additional-programming	8	10	12	µs
	Wait time after P bit clear*1	α		5	—	—	µs
	Wait time after PSU bit clear*1	β		5	—	—	µs
	Wait time after PV bit setting*1	γ		4	—	—	µs
	Wait time after dummy write*1	ε		2	—	—	µs
	Wait time after PV bit clear*1	η		2	—	—	µs
	Wait time after SWE bit clear*1	θ		100	—	—	µs
	Maximum programming count*1*4*5	N		—	—	1000	Times

Item		Symbol	Test Condition	Values Min	Typ	Max	Unit
Erase	Wait time after SWE bit setting*[1]	x		1	—	—	μs
	Wait time after ESU bit setting*[1]	y		100	—	—	μs
	Wait time after E bit setting*[1]*[6]	z		10	—	100	ms
	Wait time after E bit clear*[1]	α		10	—	—	μs
	Wait time after ESU bit clear*[1]	β		10	—	—	μs
	Wait time after EV bit setting*[1]	γ		20	—	—	μs
	Wait time after dummy write*[1]	ε		2	—	—	μs
	Wait time after EV bit clear*[1]	η		4	—	—	μs
	Wait time after SWE bit clear*[1]	θ		100	—	—	μs
	Maximum erase count*[1]*[6]*[7]	N		—	—	120	Times

Notes:
1. Make the time settings in accordance with the program/erase algorithms.
2. The programming time for 128 bytes. (Indicates the total time for which the P bit in flash memory control register 1 (FLMCR1) is set. The program-verify time is not included.)
3. The time required to erase one block. (Indicates the time for which the E bit in flash memory control register 1 (FLMCR1) is set. The erase-verify time is not included.)
4. Programming time maximum value (t_P(MAX)) = wait time after P bit setting (z) × maximum programming count (N)
5. Set the maximum programming count (N) according to the actual set values of z1, z2, and z3, so that it does not exceed the programming time maximum value (t_P(MAX)). The wait time after P bit setting (z1, z2) should be changed as follows according to the value of the programming count (n).

   Programming count (n)

   $1 \leq n \leq 6$ z1 = 30 μs

   $7 \leq n \leq 1000$ z2 = 200 μs
6. Erase time maximum value (t_E(max)) = wait time after E bit setting (z) × maximum erase count (N)
7. Set the maximum maximum erase count (N) according to the actual set value of (z), so that it does not exceed the erase time maximum value (t_E(max)).

17.3 Operation Timing

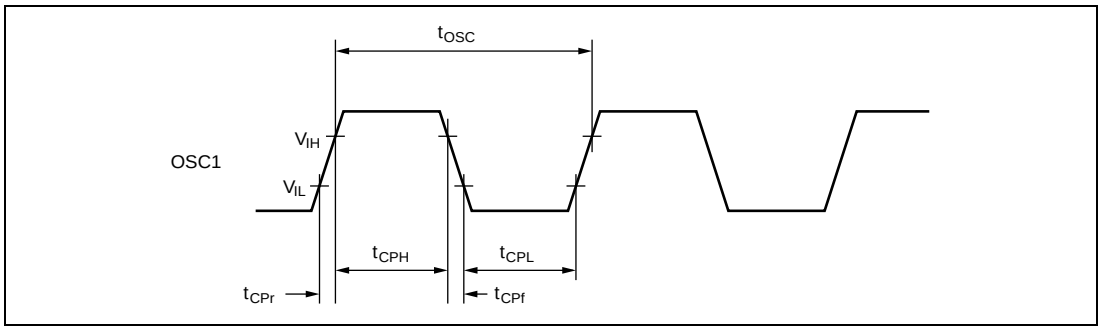

Figure 17.1 System Clock Input Timing

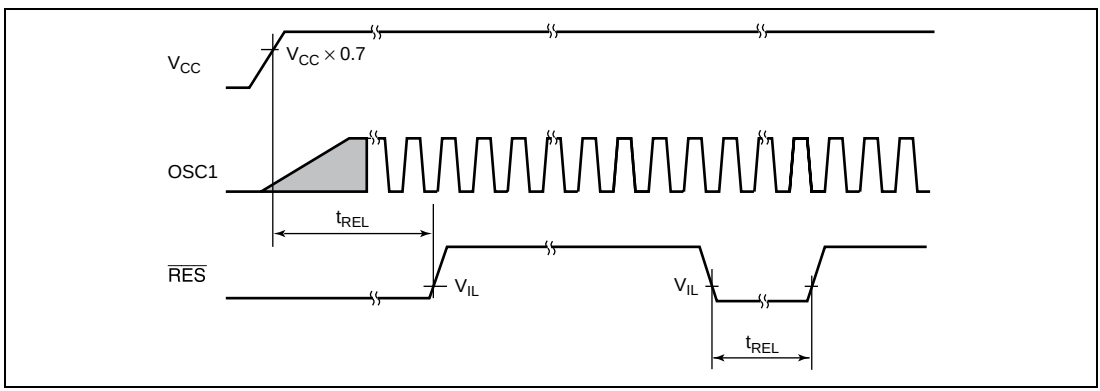

Figure 17.2 $\overline{\text{RES}}$ Low Width Timing

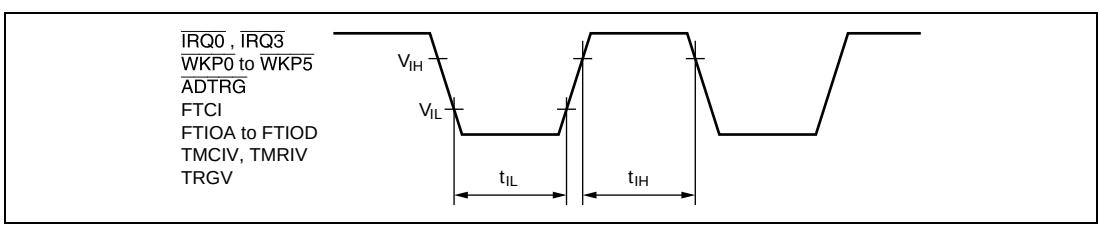

Figure 17.3 Input Timing

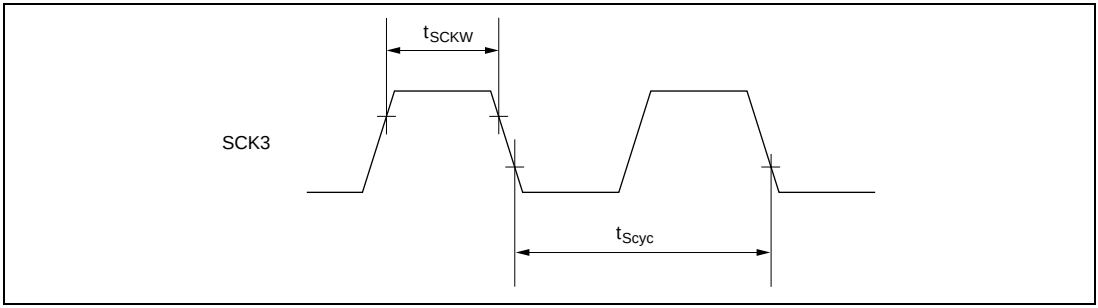

Figure 17.4 SCK3 Input Clock Timing

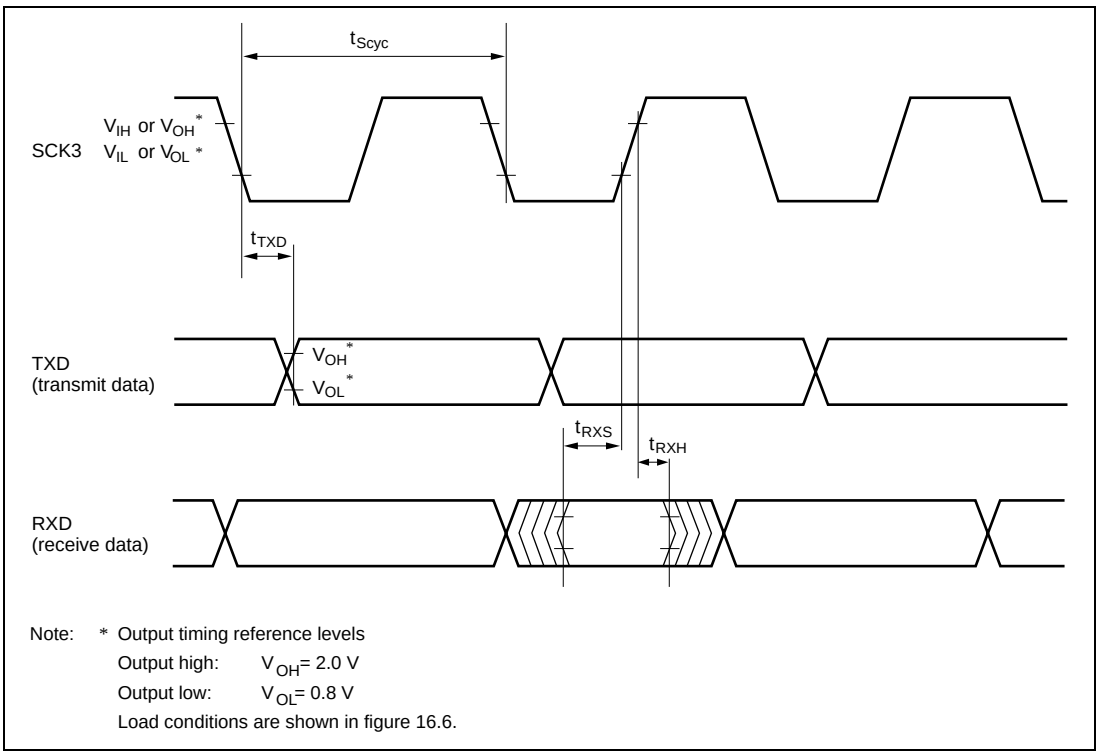

Note: * Output timing reference levels
Output high: V_{OH}= 2.0 V
Output low: V_{OL}= 0.8 V
Load conditions are shown in figure 16.6.

Figure 17.5 SCI3 Input/Output Timing in Clocked Synchronous Mode

17.4 Output Load Condition

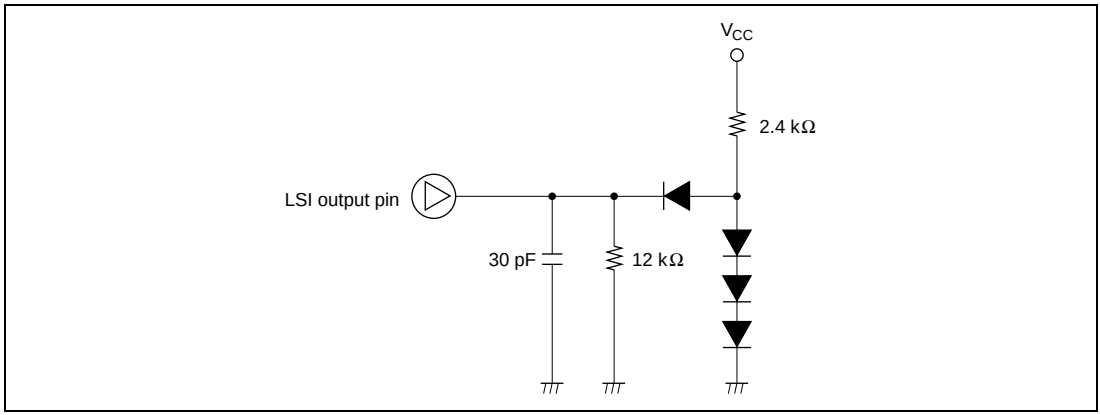

Figure 17.6 Output Load Circuit

Appendix A Instruction Set

A.1 Instruction List

Operand Notation

Symbol	Description
Rd	General (destination*) register
Rs	General (source*) register
Rn	General register*
ERd	General destination register (address register or 32-bit register)
ERs	General source register (address register or 32-bit register)
ERn	General register (32-bit register)
(EAd)	Destination operand
(EAs)	Source operand
PC	Program counter
SP	Stack pointer
CCR	Condition-code register
N	N (negative) flag in CCR
Z	Z (zero) flag in CCR
V	V (overflow) flag in CCR
C	C (carry) flag in CCR
disp	Displacement
→	Transfer from the operand on the left to the operand on the right, or transition from the state on the left to the state on the right
+	Addition of the operands on both sides
–	Subtraction of the operand on the right from the operand on the left
×	Multiplication of the operands on both sides
÷	Division of the operand on the left by the operand on the right
∧	Logical AND of the operands on both sides
∨	Logical OR of the operands on both sides
⊕	Logical exclusive OR of the operands on both sides
¬	NOT (logical complement)
( ), < >	Contents of operand

Note: General registers include 8-bit registers (R0H to R7H and R0L to R7L) and 16-bit registers (R0 to R7 and E0 to E7).

Condition Code Notation

Symbol	Description
↕	Changed according to execution result
*	Undetermined (no guaranteed value)
0	Cleared to 0
1	Set to 1
—	Not affected by execution of the instruction
Δ	Varies depending on conditions, described in notes

Table A.1 Instruction Set

1. Data transfer instructions

Mnemonic		Operand Size	Addressing Mode and Instruction Length (bytes)									Operation	Condition Code						No. of States*1	
			#xx	Rn	@ERn	@(d, ERn)	@–ERn/@ERn+	@aa	@(d, PC)	@@aa	—		I	H	N	Z	V	C	Normal	Advanced
MOV	MOV.B #xx:8, Rd	B	2									#xx:8 → Rd8	—	—	↕	↕	0	—	2	
	MOV.B Rs, Rd	B		2								Rs8 → Rd8	—	—	↕	↕	0	—	2	
	MOV.B @ERs, Rd	B			2							@ERs → Rd8	—	—	↕	↕	0	—	4	
	MOV.B @(d:16, ERs), Rd	B				4						@(d:16, ERs) → Rd8	—	—	↕	↕	0	—	6	
	MOV.B @(d:24, ERs), Rd	B				8						@(d:24, ERs) → Rd8	—	—	↕	↕	0	—	10	
	MOV.B @ERs+, Rd	B					2					@ERs → Rd8 ERs32+1 → ERs32	—	—	↕	↕	0	—	6	
	MOV.B @aa:8, Rd	B						2				@aa:8 → Rd8	—	—	↕	↕	0	—	4	
	MOV.B @aa:16, Rd	B						4				@aa:16 → Rd8	—	—	↕	↕	0	—	6	
	MOV.B @aa:24, Rd	B						6				@aa:24 → Rd8	—	—	↕	↕	0	—	8	
	MOV.B Rs, @ERd	B			2							Rs8 → @ERd	—	—	↕	↕	0	—	4	
	MOV.B Rs, @(d:16, ERd)	B				4						Rs8 → @(d:16, ERd)	—	—	↕	↕	0	—	6	
	MOV.B Rs, @(d:24, ERd)	B				8						Rs8 → @(d:24, ERd)	—	—	↕	↕	0	—	10	
	MOV.B Rs, @–ERd	B					2					ERd32–1 → ERd32 Rs8 → @ERd	—	—	↕	↕	0	—	6	
	MOV.B Rs, @aa:8	B						2				Rs8 → @aa:8	—	—	↕	↕	0	—	4	
	MOV.B Rs, @aa:16	B						4				Rs8 → @aa:16	—	—	↕	↕	0	—	6	
	MOV.B Rs, @aa:24	B						6				Rs8 → @aa:24	—	—	↕	↕	0	—	8	
	MOV.W #xx:16, Rd	W	4									#xx:16 → Rd16	—	—	↕	↕	0	—	4	
	MOV.W Rs, Rd	W		2								Rs16 → Rd16	—	—	↕	↕	0	—	2	
	MOV.W @ERs, Rd	W			2							@ERs → Rd16	—	—	↕	↕	0	—	4	
	MOV.W @(d:16, ERs), Rd	W				4						@(d:16, ERs) → Rd16	—	—	↕	↕	0	—	6	
	MOV.W @(d:24, ERs), Rd	W				8						@(d:24, ERs) → Rd16	—	—	↕	↕	0	—	10	
	MOV.W @ERs+, Rd	W					2					@ERs → Rd16 ERs32+2 → @ERd32	—	—	↕	↕	0	—	6	
	MOV.W @aa:16, Rd	W						4				@aa:16 → Rd16	—	—	↕	↕	0	—	6	
	MOV.W @aa:24, Rd	W						6				@aa:24 → Rd16	—	—	↕	↕	0	—	8	
	MOV.W Rs, @ERd	W			2							Rs16 → @ERd	—	—	↕	↕	0	—	4	
	MOV.W Rs, @(d:16, ERd)	W				4						Rs16 → @(d:16, ERd)	—	—	↕	↕	0	—	6	
	MOV.W Rs, @(d:24, ERd)	W				8						Rs16 → @(d:24, ERd)	—	—	↕	↕	0	—	10	

Mnemonic		Operand Size	Addressing Mode and Instruction Length (bytes) #xx	Rn	@ERn	@(d, ERn)	@–ERn/@ERn+	@aa	@(d, PC)	@@aa	—	Operation	Condition Code I	H	N	Z	V	C	No. of States*1 Normal	Advanced
MOV	MOV.W Rs, @–ERd	W					2					ERd32–2 → ERd32 Rs16 → @ERd	—	—	↕	↕	0	—	6	
	MOV.W Rs, @aa:16	W						4				Rs16 → @aa:16	—	—	↕	↕	0	—	6	
	MOV.W Rs, @aa:24	W						6				Rs16 → @aa:24	—	—	↕	↕	0	—	8	
	MOV.L #xx:32, Rd	L	6									#xx:32 → Rd32	—	—	↕	↕	0	—	6	
	MOV.L ERs, ERd	L		2								ERs32 → ERd32	—	—	↕	↕	0	—	2	
	MOV.L @ERs, ERd	L			4							@ERs → ERd32	—	—	↕	↕	0	—	8	
	MOV.L @(d:16, ERs), ERd	L				6						@(d:16, ERs) → ERd32	—	—	↕	↕	0	—	10	
	MOV.L @(d:24, ERs), ERd	L				10						@(d:24, ERs) → ERd32	—	—	↕	↕	0	—	14	
	MOV.L @ERs+, ERd	L					4					@ERs → ERd32 ERs32+4 → ERs32	—	—	↕	↕	0	—	10	
	MOV.L @aa:16, ERd	L						6				@aa:16 → ERd32	—	—	↕	↕	0	—	10	
	MOV.L @aa:24, ERd	L						8				@aa:24 → ERd32	—	—	↕	↕	0	—	12	
	MOV.L ERs, @ERd	L			4							ERs32 → @ERd	—	—	↕	↕	0	—	8	
	MOV.L ERs, @(d:16, ERd)	L				6						ERs32 → @(d:16, ERd)	—	—	↕	↕	0	—	10	
	MOV.L ERs, @(d:24, ERd)	L				10						ERs32 → @(d:24, ERd)	—	—	↕	↕	0	—	14	
	MOV.L ERs, @–ERd	L					4					ERd32–4 → ERd32 ERs32 → @ERd	—	—	↕	↕	0	—	10	
	MOV.L ERs, @aa:16	L						6				ERs32 → @aa:16	—	—	↕	↕	0	—	10	
	MOV.L ERs, @aa:24	L						8				ERs32 → @aa:24	—	—	↕	↕	0	—	12	
POP	POP.W Rn	W									2	@SP → Rn16 SP+2 → SP	—	—	↕	↕	0	—	6	
	POP.L ERn	L									4	@SP → ERn32 SP+4 → SP	—	—	↕	↕	0	—	10	
PUSH	PUSH.W Rn	W									2	SP–2 → SP Rn16 → @SP	—	—	↕	↕	0	—	6	
	PUSH.L ERn	L									4	SP–4 → SP ERn32 → @SP	—	—	↕	↕	0	—	10	
MOVFPE	MOVFPE @aa:16, Rd	B						4				Cannot be used in this LSI	Cannot be used in this LSI							
MOVTPE	MOVTPE Rs, @aa:16	B						4				Cannot be used in this LSI	Cannot be used in this LSI							

2. Arithmetic instructions

Mnemonic		Operand Size	Addressing Mode and Instruction Length (bytes) #xx	Rn	@ERn	@(d, ERn)	@–ERn/@ERn+	@aa	@(d, PC)	@@aa	—	Operation	Condition Code I	H	N	Z	V	C	No. of States*1 Normal	Advanced
ADD	ADD.B #xx:8, Rd	B	2									Rd8+#xx:8 → Rd8	—	↕	↕	↕	↕	↕	2	
	ADD.B Rs, Rd	B		2								Rd8+Rs8 → Rd8	—	↕	↕	↕	↕	↕	2	
	ADD.W #xx:16, Rd	W	4									Rd16+#xx:16 → Rd16	—	(1)	↕	↕	↕	↕	4	
	ADD.W Rs, Rd	W		2								Rd16+Rs16 → Rd16	—	(1)	↕	↕	↕	↕	2	
	ADD.L #xx:32, ERd	L	6									ERd32+#xx:32 → ERd32	—	(2)	↕	↕	↕	↕	6	
	ADD.L ERs, ERd	L		2								ERd32+ERs32 → ERd32	—	(2)	↕	↕	↕	↕	2	
ADDX	ADDX.B #xx:8, Rd	B	2									Rd8+#xx:8 +C → Rd8	—	↕	↕	(3)	↕	↕	2	
	ADDX.B Rs, Rd	B		2								Rd8+Rs8 +C → Rd8	—	↕	↕	(3)	↕	↕	2	
ADDS	ADDS.L #1, ERd	L		2								ERd32+1 → ERd32	—	—	—	—	—	—	2	
	ADDS.L #2, ERd	L		2								ERd32+2 → ERd32	—	—	—	—	—	—	2	
	ADDS.L #4, ERd	L		2								ERd32+4 → ERd32	—	—	—	—	—	—	2	
INC	INC.B Rd	B		2								Rd8+1 → Rd8	—	—	↕	↕	↕	—	2	
	INC.W #1, Rd	W		2								Rd16+1 → Rd16	—	—	↕	↕	↕	—	2	
	INC.W #2, Rd	W		2								Rd16+2 → Rd16	—	—	↕	↕	↕	—	2	
	INC.L #1, ERd	L		2								ERd32+1 → ERd32	—	—	↕	↕	↕	—	2	
	INC.L #2, ERd	L		2								ERd32+2 → ERd32	—	—	↕	↕	↕	—	2	
DAA	DAA Rd	B		2								Rd8 decimal adjust → Rd8	—	*	↕	↕	*	—	2	
SUB	SUB.B Rs, Rd	B		2								Rd8–Rs8 → Rd8	—	↕	↕	↕	↕	↕	2	
	SUB.W #xx:16, Rd	W	4									Rd16–#xx:16 → Rd16	—	(1)	↕	↕	↕	↕	4	
	SUB.W Rs, Rd	W		2								Rd16–Rs16 → Rd16	—	(1)	↕	↕	↕	↕	2	
	SUB.L #xx:32, ERd	L	6									ERd32–#xx:32 → ERd32	—	(2)	↕	↕	↕	↕	6	
	SUB.L ERs, ERd	L		2								ERd32–ERs32 → ERd32	—	(2)	↕	↕	↕	↕	2	
SUBX	SUBX.B #xx:8, Rd	B	2									Rd8–#xx:8–C → Rd8	—	↕	↕	(3)	↕	↕	2	
	SUBX.B Rs, Rd	B		2								Rd8–Rs8–C → Rd8	—	↕	↕	(3)	↕	↕	2	
SUBS	SUBS.L #1, ERd	L		2								ERd32–1 → ERd32	—	—	—	—	—	—	2	
	SUBS.L #2, ERd	L		2								ERd32–2 → ERd32	—	—	—	—	—	—	2	
	SUBS.L #4, ERd	L		2								ERd32–4 → ERd32	—	—	—	—	—	—	2	
DEC	DEC.B Rd	B		2								Rd8–1 → Rd8	—	—	↕	↕	↕	—	2	
	DEC.W #1, Rd	W		2								Rd16–1 → Rd16	—	—	↕	↕	↕	—	2	
	DEC.W #2, Rd	W		2								Rd16–2 → Rd16	—	—	↕	↕	↕	—	2	

Mnemonic		Operand Size	Addressing Mode and Instruction Length (bytes)								Operation	Condition Code						No. of States*1	
			#xx	Rn	@ERn	@(d, ERn)	@–ERn/@ERn+	@aa	@(d, PC)	@@aa	—		I	H	N	Z	V	C	Normal	Advanced
DEC	DEC.L #1, ERd	L		2								ERd32–1 → ERd32	—	—	↕	↕	↕	—	2	
	DEC.L #2, ERd	L		2								ERd32–2 → ERd32	—	—	↕	↕	↕	—	2	
DAS	DAS.Rd	B		2								Rd8 decimal adjust → Rd8	—	*	↕	↕	*	—	2	
MULXU	MULXU. B Rs, Rd	B		2								Rd8 × Rs8 → Rd16 (unsigned multiplication)	—	—	—	—	—	—	14	
	MULXU. W Rs, ERd	W		2								Rd16 × Rs16 → ERd32 (unsigned multiplication)	—	—	—	—	—	—	22	
MULXS	MULXS. B Rs, Rd	B		4								Rd8 × Rs8 → Rd16 (signed multiplication)	—	—	↕	↕	—	—	16	
	MULXS. W Rs, ERd	W		4								Rd16 × Rs16 → ERd32 (signed multiplication)	—	—	↕	↕	—	—	24	
DIVXU	DIVXU. B Rs, Rd	B		2								Rd16 ÷ Rs8 → Rd16 (RdH: remainder, RdL: quotient) (unsigned division)	—	—	(6)	(7)	—	—	14	
	DIVXU. W Rs, ERd	W		2								ERd32 ÷ Rs16 → ERd32 (Ed: remainder, Rd: quotient) (unsigned division)	—	—	(6)	(7)	—	—	22	
DIVXS	DIVXS. B Rs, Rd	B		4								Rd16 ÷ Rs8 → Rd16 (RdH: remainder, RdL: quotient) (signed division)	—	—	(8)	(7)	—	—	16	
	DIVXS. W Rs, ERd	W		4								ERd32 ÷ Rs16 → ERd32 (Ed: remainder, Rd: quotient) (signed division)	—	—	(8)	(7)	—	—	24	
CMP	CMP.B #xx:8, Rd	B	2									Rd8–#xx:8	—	↕	↕	↕	↕	↕	2	
	CMP.B Rs, Rd	B		2								Rd8–Rs8	—	↕	↕	↕	↕	↕	2	
	CMP.W #xx:16, Rd	W	4									Rd16–#xx:16	—	(1)	↕	↕	↕	↕	4	
	CMP.W Rs, Rd	W		2								Rd16–Rs16	—	(1)	↕	↕	↕	↕	2	
	CMP.L #xx:32, ERd	L	6									ERd32–#xx:32	—	(2)	↕	↕	↕	↕	4	
	CMP.L ERs, ERd	L		2								ERd32–ERs32	—	(2)	↕	↕	↕	↕	2	

Mnemonic		Operand Size	Operation	Addressing Mode and Instruction Length (bytes)									Condition Code						No. of States*1	
				#xx	Rn	@ERn	@(d, ERn)	@–ERn/@ERn+	@aa	@(d, PC)	@@aa	—	I	H	N	Z	V	C	Normal	Advanced
NEG	NEG.B Rd	B	0–Rd8 → Rd8		2								—	↕	↕	↕	↕	↕	2	
	NEG.W Rd	W	0–Rd16 → Rd16		2								—	↕	↕	↕	↕	↕	2	
	NEG.L ERd	L	0–ERd32 → ERd32		2								—	↕	↕	↕	↕	↕	2	
EXTU	EXTU.W Rd	W	0 → (<bits 15 to 8> of Rd16)		2								—	—	0	↕	0	—	2	
	EXTU.L ERd	L	0 → (<bits 31 to 16> of ERd32)		2								—	—	0	↕	0	—	2	
EXTS	EXTS.W Rd	W	(<bit 7> of Rd16) → (<bits 15 to 8> of Rd16)		2								—	—	↕	↕	0	—	2	
	EXTS.L ERd	L	(<bit 15> of ERd32) → (<bits 31 to 16> of ERd32)		2								—	—	↕	↕	0	—	2	

3. Logic instructions

Mnemonic		Operand Size	Addressing Mode and Instruction Length (bytes)									Operation	Condition Code						No. of States*1	
			#xx	Rn	@ERn	@(d, ERn)	@–ERn/@ERn+	@aa	@(d, PC)	@@aa	—		I	H	N	Z	V	C	Normal	Advanced
AND	AND.B #xx:8, Rd	B	2									Rd8∧#xx:8 → Rd8	—	—	↕	↕	0	—	2	
	AND.B Rs, Rd	B		2								Rd8∧Rs8 → Rd8	—	—	↕	↕	0	—	2	
	AND.W #xx:16, Rd	W	4									Rd16∧#xx:16 → Rd16	—	—	↕	↕	0	—	4	
	AND.W Rs, Rd	W		2								Rd16∧Rs16 → Rd16	—	—	↕	↕	0	—	2	
	AND.L #xx:32, ERd	L	6									ERd32∧#xx:32 → ERd32	—	—	↕	↕	0	—	6	
	AND.L ERs, ERd	L		4								ERd32∧ERs32 → ERd32	—	—	↕	↕	0	—	4	
OR	OR.B #xx:8, Rd	B	2									Rd8∨#xx:8 → Rd8	—	—	↕	↕	0	—	2	
	OR.B Rs, Rd	B		2								Rd8∨Rs8 → Rd8	—	—	↕	↕	0	—	2	
	OR.W #xx:16, Rd	W	4									Rd16∨#xx:16 → Rd16	—	—	↕	↕	0	—	4	
	OR.W Rs, Rd	W		2								Rd16∨Rs16 → Rd16	—	—	↕	↕	0	—	2	
	OR.L #xx:32, ERd	L	6									ERd32∨#xx:32 → ERd32	—	—	↕	↕	0	—	6	
	OR.L ERs, ERd	L		4								ERd32∨ERs32 → ERd32	—	—	↕	↕	0	—	4	
XOR	XOR.B #xx:8, Rd	B	2									Rd8⊕#xx:8 → Rd8	—	—	↕	↕	0	—	2	
	XOR.B Rs, Rd	B		2								Rd8⊕Rs8 → Rd8	—	—	↕	↕	0	—	2	
	XOR.W #xx:16, Rd	W	4									Rd16⊕#xx:16 → Rd16	—	—	↕	↕	0	—	4	
	XOR.W Rs, Rd	W		2								Rd16⊕Rs16 → Rd16	—	—	↕	↕	0	—	2	
	XOR.L #xx:32, ERd	L	6									ERd32⊕#xx:32 → ERd32	—	—	↕	↕	0	—	6	
	XOR.L ERs, ERd	L		4								ERd32⊕ERs32 → ERd32	—	—	↕	↕	0	—	4	
NOT	NOT.B Rd	B		2								¬ Rd8 → Rd8	—	—	↕	↕	0	—	2	
	NOT.W Rd	W		2								¬ Rd16 → Rd16	—	—	↕	↕	0	—	2	
	NOT.L ERd	L		2								¬ Rd32 → Rd32	—	—	↕	↕	0	—	2	

4. Shift instructions

Mnemonic		Operand Size	Addressing Mode and Instruction Length (bytes)									Operation	Condition Code						No. of States*1	
			#xx	Rn	@ERn	@(d, ERn)	@–ERn/@ERn+	@aa	@(d, PC)	@@aa	—		I	H	N	Z	V	C	Normal	Advanced
SHAL	SHAL.B Rd	B		2								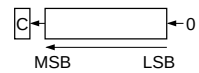	—	—	↕	↕	↕	↕	2	
	SHAL.W Rd	W		2									—	—	↕	↕	↕	↕	2	
	SHAL.L ERd	L		2									—	—	↕	↕	↕	↕	2	
SHAR	SHAR.B Rd	B		2								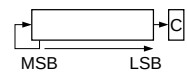	—	—	↕	↕	0	↕	2	
	SHAR.W Rd	W		2									—	—	↕	↕	0	↕	2	
	SHAR.L ERd	L		2									—	—	↕	↕	0	↕	2	
SHLL	SHLL.B Rd	B		2								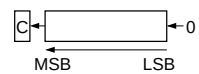	—	—	↕	↕	0	↕	2	
	SHLL.W Rd	W		2									—	—	↕	↕	0	↕	2	
	SHLL.L ERd	L		2									—	—	↕	↕	0	↕	2	
SHLR	SHLR.B Rd	B		2								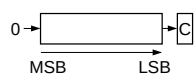	—	—	↕	↕	0	↕	2	
	SHLR.W Rd	W		2									—	—	↕	↕	0	↕	2	
	SHLR.L ERd	L		2									—	—	↕	↕	0	↕	2	
ROTXL	ROTXL.B Rd	B		2								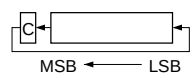	—	—	↕	↕	0	↕	2	
	ROTXL.W Rd	W		2									—	—	↕	↕	0	↕	2	
	ROTXL.L ERd	L		2									—	—	↕	↕	0	↕	2	
ROTXR	ROTXR.B Rd	B		2								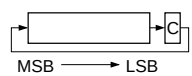	—	—	↕	↕	0	↕	2	
	ROTXR.W Rd	W		2									—	—	↕	↕	0	↕	2	
	ROTXR.L ERd	L		2									—	—	↕	↕	0	↕	2	
ROTL	ROTL.B Rd	B		2								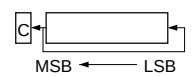	—	—	↕	↕	0	↕	2	
	ROTL.W Rd	W		2									—	—	↕	↕	0	↕	2	
	ROTL.L ERd	L		2									—	—	↕	↕	0	↕	2	
ROTR	ROTR.B Rd	B		2								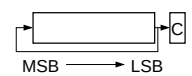	—	—	↕	↕	0	↕	2	
	ROTR.W Rd	W		2									—	—	↕	↕	0	↕	2	
	ROTR.L ERd	L		2									—	—	↕	↕	0	↕	2	

5. Bit manipulation instructions

Mnemonic		Operand Size	Addressing Mode and Instruction Length (bytes)									Operation	Condition Code						No. of States*1	
			#xx	Rn	@ERn	@(d, ERn)	@–ERn/@ERn+	@aa	@(d, PC)	@@aa	|		I	H	N	Z	V	C	Normal	Advanced
BSET	BSET #xx:3, Rd	B		2								(#xx:3 of Rd8) ← 1	—	—	—	—	—	—	2	
	BSET #xx:3, @ERd	B			4							(#xx:3 of @ERd) ← 1	—	—	—	—	—	—	8	
	BSET #xx:3, @aa:8	B						4				(#xx:3 of @aa:8) ← 1	—	—	—	—	—	—	8	
	BSET Rn, Rd	B		2								(Rn8 of Rd8) ← 1	—	—	—	—	—	—	2	
	BSET Rn, @ERd	B			4							(Rn8 of @ERd) ← 1	—	—	—	—	—	—	8	
	BSET Rn, @aa:8	B						4				(Rn8 of @aa:8) ← 1	—	—	—	—	—	—	8	
BCLR	BCLR #xx:3, Rd	B		2								(#xx:3 of Rd8) ← 0	—	—	—	—	—	—	2	
	BCLR #xx:3, @ERd	B			4							(#xx:3 of @ERd) ← 0	—	—	—	—	—	—	8	
	BCLR #xx:3, @aa:8	B						4				(#xx:3 of @aa:8) ← 0	—	—	—	—	—	—	8	
	BCLR Rn, Rd	B		2								(Rn8 of Rd8) ← 0	—	—	—	—	—	—	2	
	BCLR Rn, @ERd	B			4							(Rn8 of @ERd) ← 0	—	—	—	—	—	—	8	
	BCLR Rn, @aa:8	B						4				(Rn8 of @aa:8) ← 0	—	—	—	—	—	—	8	
BNOT	BNOT #xx:3, Rd	B		2								(#xx:3 of Rd8) ← ¬ (#xx:3 of Rd8)	—	—	—	—	—	—	2	
	BNOT #xx:3, @ERd	B			4							(#xx:3 of @ERd) ← ¬ (#xx:3 of @ERd)	—	—	—	—	—	—	8	
	BNOT #xx:3, @aa:8	B						4				(#xx:3 of @aa:8) ← ¬ (#xx:3 of @aa:8)	—	—	—	—	—	—	8	
	BNOT Rn, Rd	B		2								(Rn8 of Rd8) ← ¬ (Rn8 of Rd8)	—	—	—	—	—	—	2	
	BNOT Rn, @ERd	B			4							(Rn8 of @ERd) ← ¬ (Rn8 of @ERd)	—	—	—	—	—	—	8	
	BNOT Rn, @aa:8	B						4				(Rn8 of @aa:8) ← ¬ (Rn8 of @aa:8)	—	—	—	—	—	—	8	
BTST	BTST #xx:3, Rd	B		2								¬ (#xx:3 of Rd8) → Z	—	—	—	↕	—	—	2	
	BTST #xx:3, @ERd	B			4							¬ (#xx:3 of @ERd) → Z	—	—	—	↕	—	—	6	
	BTST #xx:3, @aa:8	B						4				¬ (#xx:3 of @aa:8) → Z	—	—	—	↕	—	—	6	
	BTST Rn, Rd	B		2								¬ (Rn8 of @Rd8) → Z	—	—	—	↕	—	—	2	
	BTST Rn, @ERd	B			4							¬ (Rn8 of @ERd) → Z	—	—	—	↕	—	—	6	
	BTST Rn, @aa:8	B						4				¬ (Rn8 of @aa:8) → Z	—	—	—	↕	—	—	6	
BLD	BLD #xx:3, Rd	B		2								(#xx:3 of Rd8) → C	—	—	—	—	—	↕	2	

Mnemonic		Operand Size	Addressing Mode and Instruction Length (bytes)									Operation	Condition Code						No. of States*1	
			#xx	Rn	@ERn	@(d, ERn)	@–ERn/@ERn+	@aa	@(d, PC)	@@aa	—		I	H	N	Z	V	C	Normal	Advanced
BLD	BLD #xx:3, @ERd	B			4							(#xx:3 of @ERd) → C	—	—	—	—	—	↕	6	
	BLD #xx:3, @aa:8	B						4				(#xx:3 of @aa:8) → C	—	—	—	—	—	↕	6	
BILD	BILD #xx:3, Rd	B		2								¬ (#xx:3 of Rd8) → C	—	—	—	—	—	↕	2	
	BILD #xx:3, @ERd	B			4							¬ (#xx:3 of @ERd) → C	—	—	—	—	—	↕	6	
	BILD #xx:3, @aa:8	B						4				¬ (#xx:3 of @aa:8) → C	—	—	—	—	—	↕	6	
BST	BST #xx:3, Rd	B		2								C → (#xx:3 of Rd8)	—	—	—	—	—	—	2	
	BST #xx:3, @ERd	B			4							C → (#xx:3 of @ERd24)	—	—	—	—	—	—	8	
BIST	BST #xx:3, @aa:8	B						4				C → (#xx:3 of @aa:8)	—	—	—	—	—	—	8	
	BIST #xx:3, Rd	B		2								¬ C → (#xx:3 of Rd8)	—	—	—	—	—	—	2	
	BIST #xx:3, @ERd	B			4							¬ C → (#xx:3 of @ERd24)	—	—	—	—	—	—	8	
	BIST #xx:3, @aa:8	B						4				¬ C → (#xx:3 of @aa:8)	—	—	—	—	—	—	8	
BAND	BAND #xx:3, Rd	B		2								C∧(#xx:3 of Rd8) → C	—	—	—	—	—	↕	2	
	BAND #xx:3, @ERd	B			4							C∧(#xx:3 of @ERd24) → C	—	—	—	—	—	↕	6	
BIAND	BAND #xx:3, @aa:8	B						4				C∧(#xx:3 of @aa:8) → C	—	—	—	—	—	↕	6	
	BIAND #xx:3, Rd	B		2								C∧ ¬ (#xx:3 of Rd8) → C	—	—	—	—	—	↕	2	
	BIAND #xx:3, @ERd	B			4							C∧ ¬ (#xx:3 of @ERd24) → C	—	—	—	—	—	↕	6	
	BIAND #xx:3, @aa:8	B						4				C∧ ¬ (#xx:3 of @aa:8) → C	—	—	—	—	—	↕	6	
BOR	BOR #xx:3, Rd	B		2								C∨(#xx:3 of Rd8) → C	—	—	—	—	—	↕	2	
	BOR #xx:3, @ERd	B			4							C∨(#xx:3 of @ERd24) → C	—	—	—	—	—	↕	6	
	BOR #xx:3, @aa:8	B						4				C∨(#xx:3 of @aa:8) → C	—	—	—	—	—	↕	6	
BIOR	BIOR #xx:3, Rd	B		2								C∨ ¬ (#xx:3 of Rd8) → C	—	—	—	—	—	↕	2	
	BIOR #xx:3, @ERd	B			4							C∨ ¬ (#xx:3 of @ERd24) → C	—	—	—	—	—	↕	6	
	BIOR #xx:3, @aa:8	B						4				C∨ ¬ (#xx:3 of @aa:8) → C	—	—	—	—	—	↕	6	
BXOR	BXOR #xx:3, Rd	B		2								C⊕(#xx:3 of Rd8) → C	—	—	—	—	—	↕	2	
	BXOR #xx:3, @ERd	B			4							C⊕(#xx:3 of @ERd24) → C	—	—	—	—	—	↕	6	
	BXOR #xx:3, @aa:8	B						4				C⊕(#xx:3 of @aa:8) → C	—	—	—	—	—	↕	6	
BIXOR	BIXOR #xx:3, Rd	B		2								C⊕ ¬ (#xx:3 of Rd8) → C	—	—	—	—	—	↕	2	
	BIXOR #xx:3, @ERd	B			4							C⊕ ¬ (#xx:3 of @ERd24) → C	—	—	—	—	—	↕	6	
	BIXOR #xx:3, @aa:8	B						4				C⊕ ¬ (#xx:3 of @aa:8) → C	—	—	—	—	—	↕	6	

Mnemonic		Operand Size	Addressing Mode and Instruction Length (bytes) #xx	Rn	@ERn	@(d, ERn)	@–ERn/@ERn+	@aa	@(d, PC)	@@aa	—	Operation	Branch Condition	Condition Code I	H	N	Z	V	C	No. of States*1 Normal	Advanced
Bcc	BRA d:8 (BT d:8)	—							2			If condition is true then PC ← PC+d else next;	Always	—	—	—	—	—	—	4	
	BRA d:16 (BT d:16)	—							4					—	—	—	—	—	—	6	
	BRN d:8 (BF d:8)	—							2				Never	—	—	—	—	—	—	4	
	BRN d:16 (BF d:16)	—							4					—	—	—	—	—	—	6	
	BHI d:8	—							2				C/Z = 0	—	—	—	—	—	—	4	
	BHI d:16	—							4					—	—	—	—	—	—	6	
	BLS d:8	—							2				C/Z = 1	—	—	—	—	—	—	4	
	BLS d:16	—							4					—	—	—	—	—	—	6	
	BCC d:8 (BHS d:8)	—							2				C = 0	—	—	—	—	—	—	4	
	BCC d:16 (BHS d:16)	—							4					—	—	—	—	—	—	6	
	BCS d:8 (BLO d:8)	—							2				C = 1	—	—	—	—	—	—	4	
	BCS d:16 (BLO d:16)	—							4					—	—	—	—	—	—	6	
	BNE d:8	—							2				Z = 0	—	—	—	—	—	—	4	
	BNE d:16	—							4					—	—	—	—	—	—	6	
	BEQ d:8	—							2				Z = 1	—	—	—	—	—	—	4	
	BEQ d:16	—							4					—	—	—	—	—	—	6	
	BVC d:8	—							2				V = 0	—	—	—	—	—	—	4	
	BVC d:16	—							4					—	—	—	—	—	—	6	
	BVS d:8	—							2				V = 1	—	—	—	—	—	—	4	
	BVS d:16	—							4					—	—	—	—	—	—	6	
	BPL d:8	—							2				N = 0	—	—	—	—	—	—	4	
	BPL d:16	—							4					—	—	—	—	—	—	6	
	BMI d:8	—							2				N = 1	—	—	—	—	—	—	4	
	BMI d:16	—							4					—	—	—	—	—	—	6	
	BGE d:8	—							2				N⊕V = 0	—	—	—	—	—	—	4	
	BGE d:16	—							4					—	—	—	—	—	—	6	
	BLT d:8	—							2				N⊕V = 1	—	—	—	—	—	—	4	
	BLT d:16	—							4					—	—	—	—	—	—	6	
	BGT d:8	—							2				Z/(N⊕V) = 0	—	—	—	—	—	—	4	
	BGT d:16	—							4					—	—	—	—	—	—	6	
	BLE d:8	—							2				Z/(N⊕V) = 1	—	—	—	—	—	—	4	
	BLE d:16	—							4					—	—	—	—	—	—	6	

Mnemonic		Operand Size	Addressing Mode and Instruction Length (bytes)									Operation	Condition Code						No. of States*1	
			#xx	Rn	@ERn	@(d, ERn)	@–ERn/@ERn+	@aa	@(d, PC)	@@aa	—		I	H	N	Z	V	C	Normal	Advanced
JMP	JMP @ERn	—			2							PC ← ERn	—	—	—	—	—	—	4	
	JMP @aa:24	—						4				PC ← aa:24	—	—	—	—	—	—	6	
	JMP @@aa:8	—								2		PC ← @aa:8	—	—	—	—	—	—	8	10
BSR	BSR d:8	—							2			PC → @–SP PC ← PC+d:8	—	—	—	—	—	—	6	8
	BSR d:16	—							4			PC → @–SP PC ← PC+d:16	—	—	—	—	—	—	8	10
JSR	JSR @ERn	—			2							PC → @–SP PC ← ERn	—	—	—	—	—	—	6	8
	JSR @aa:24	—						4				PC → @–SP PC ← aa:24	—	—	—	—	—	—	8	10
	JSR @@aa:8	—								2		PC → @–SP PC ← @aa:8	—	—	—	—	—	—	8	12
RTS	RTS	—									2	PC ← @SP+	—	—	—	—	—	—	8	10

Mnemonic		Operand Size	Addressing Mode and Instruction Length (bytes)									Operation	Condition Code						No. of States*1	
			#xx	Rn	@ERn	@(d, ERn)	@–ERn/@ERn+	@aa	@(d, PC)	@@aa	—		I	H	N	Z	V	C	Normal	Advanced
TRAPA	TRAPA #x:2	—									2	PC → @–SP CCR → @–SP <vector> → PC	1	—	—	—	—	—	14	16
RTE	RTE	—										CCR ← @SP+ PC ← @SP+	↕	↕	↕	↕	↕	↕	10	
SLEEP	SLEEP	—										Transition to power-down state	—	—	—	—	—	—	2	
LDC	LDC #xx:8, CCR	B	2									#xx:8 → CCR	↕	↕	↕	↕	↕	↕	2	
	LDC Rs, CCR	B		2								Rs8 → CCR	↕	↕	↕	↕	↕	↕	2	
	LDC @ERs, CCR	W			4							@ERs → CCR	↕	↕	↕	↕	↕	↕	6	
	LDC @(d:16, ERs), CCR	W				6						@(d:16, ERs) → CCR	↕	↕	↕	↕	↕	↕	8	
	LDC @(d:24, ERs), CCR	W				10						@(d:24, ERs) → CCR	↕	↕	↕	↕	↕	↕	12	
	LDC @ERs+, CCR	W					4					@ERs → CCR ERs32+2 → ERs32	↕	↕	↕	↕	↕	↕	8	
	LDC @aa:16, CCR	W						6				@aa:16 → CCR	↕	↕	↕	↕	↕	↕	8	
	LDC @aa:24, CCR	W						8				@aa:24 → CCR	↕	↕	↕	↕	↕	↕	10	
STC	STC CCR, Rd	B		2								CCR → Rd8	—	—	—	—	—	—	2	
	STC CCR, @ERd	W			4							CCR → @ERd	—	—	—	—	—	—	6	
	STC CCR, @(d:16, ERd)	W				6						CCR → @(d:16, ERd)	—	—	—	—	—	—	8	
	STC CCR, @(d:24, ERd)	W				10						CCR → @(d:24, ERd)	—	—	—	—	—	—	12	
	STC CCR, @–ERd	W					4					ERd32–2 → ERd32 CCR → @ERd	—	—	—	—	—	—	8	
	STC CCR, @aa:16	W						6				CCR → @aa:16	—	—	—	—	—	—	8	
	STC CCR, @aa:24	W						8				CCR → @aa:24	—	—	—	—	—	—	10	
ANDC	ANDC #xx:8, CCR	B	2									CCR∧#xx:8 → CCR	↕	↕	↕	↕	↕	↕	2	
ORC	ORC #xx:8, CCR	B	2									CCR∨#xx:8 → CCR	↕	↕	↕	↕	↕	↕	2	
XORC	XORC #xx:8, CCR	B	2									CCR⊕#xx:8 → CCR	↕	↕	↕	↕	↕	↕	2	
NOP	NOP	—									2	PC ← PC+2	—	—	—	—	—	—	2	

8. Block transfer instructions

Mnemonic		Operand Size	Addressing Mode and Instruction Length (bytes)									Operation	Condition Code						No. of States*1	
			#xx	Rn	@ERn	@(d, ERn)	@–ERn/@ERn+	@aa	@(d, PC)	@@aa	|		I	H	N	Z	V	C	Normal	Advanced
EEPMOV	EEPMOV. B	—									4	if R4L ≠ 0 then repeat @R5 → @R6 R5+1 → R5 R6+1 → R6 R4L–1 → R4L until R4L=0 else next	—	—	—	—	—	—	8+ 4n*2	
	EEPMOV. W	—									4	if R4 ≠ 0 then repeat @R5 → @R6 R5+1 → R5 R6+1 → R6 R4–1 → R4 until R4=0 else next	—	—	—	—	—	—	8+ 4n*2	

Notes: 1. The number of states in cases where the instruction code and its operands are located in on-chip memory is shown here. For other cases see section A.3, Number of Execution States.

2. n is the value set in register R4L or R4.

(1) Set to 1 when a carry or borrow occurs at bit 11; otherwise cleared to 0.

(2) Set to 1 when a carry or borrow occurs at bit 27; otherwise cleared to 0.

(3) Retains its previous value when the result is zero; otherwise cleared to 0.

(4) Set to 1 when the adjustment produces a carry; otherwise retains its previous value.

(5) The number of states required for execution of an instruction that transfers data in synchronization with the E clock is variable.

(6) Set to 1 when the divisor is negative; otherwise cleared to 0.

(7) Set to 1 when the divisor is zero; otherwise cleared to 0.

(8) Set to 1 when the quotient is negative; otherwise cleared to 0.

A.2 Operation Code Map

Table A.2 Operation Code Map (1)

Instruction code:

1st byte		2nd byte	
AH	AL	BH	BL

Instruction when most significant bit of BH is 0.

Instruction when most significant bit of BH is 1.

AH \ AL	0	1	2	3	4	5	6	7	8	9	A	B	C	D	E	F
0	NOP	Table A-2 (2)	STC	LDC	ORC	XORC	ANDC	LDC	ADD		Table A-2 (2)	Table A-2 (2)	MOV		ADDX	Table A-2 (2)
1	Table A-2 (2)	Table A-2 (2)	Table A-2 (2)	Table A-2 (2)	OR.B	XOR.B	AND.B	Table A-2 (2)	SUB		Table A-2 (2)	Table A-2 (2)	CMP		SUBX	Table A-2 (2)
2	MOV.B															
3																
4	BRA	BRN	BHI	BLS	BCC	BCS	BNE	BEQ	BVC	BVS	BPL	BMI	BGE	BLT	BGT	BLE
5	MULXU	DIVXU	MULXU	DIVXU	RTS	BSR	RTE	TRAPA	Table A-2 (2)	JMP			BSR	JSR		
6	BSET	BNOT	BCLR	BTST	OR	XOR	AND	BST / BIST	MOV				MOV			
7					BOR / BIOR	BXOR / BIXOR	BAND / BIAND	BLD / BILD		Table A-2 (2)	Table A-2 (2)	EEPMOV		Table A-2 (3)		
8	ADD															
9	ADDX															
A	CMP															
B	SUBX															
C	OR															
D	XOR															
E	AND															
F	MOV															

Table A.2 Operation Code Map (2)

Instruction code:

1st byte		2nd byte	
AH	AL	BH	BL

AH AL \ BH	0	1	2	3	4	5	6	7	8	9	A	B	C	D	E	F
01	MOV				LDC/STC				SLEEP				Table A-2 (3)	Table A-2 (3)		Table A-2 (3)
0A	INC								ADD							
0B	ADDS					INC		INC	ADDS					INC		INC
0F	DAA								MOV							
10	SHLL			SHLL					SHAL			SHAL				
11	SHLR			SHLR					SHAR			SHAR				
12	ROTXL			ROTXL					ROTL			ROTL				
13	ROTXR			ROTXR					ROTR			ROTR				
17	NOT			NOT		EXTU		EXTU	NEG			NEG		EXTS		EXTS
1A	DEC								SUB							
1B	SUBS					DEC		DEC	SUB					DEC		DEC
1F	DAS								CMP							
58	BRA	BRN	BHI	BLS	BCC	BCS	BNE	BEQ	BVC	BVS	BPL	BMI	BGE	BLT	BGT	BLE
79	MOV	ADD	CMP	SUB	OR	XOR	AND									
7A	MOV	ADD	CMP	SUB	OR	XOR	AND									

Table A.2 Operation Code Map (3)

Instruction code:

1st byte		2nd byte		3rd byte		4th byte	
AH	AL	BH	BL	CH	CL	DH	DL

Instruction when most significant bit of DH is 0.

Instruction when most significant bit of DH is 1.

AH ALBH BLCH \ CL	0	1	2	3	4	5	6	7	8	9	A	B	C	D	E	F
01406										LDC / STC		LDC / STC		LDC / STC		LDC / STC
01C05	MULXS		MULXS													
01D05		DIVXS		DIVXS												
01F06					OR	XOR	AND									
7Cr06 *1				BTST												
7Cr07 *1				BTST	BOR / BIOR	BXOR / BIXOR	BAND / BIAND	BLD / BILD								
7Dr06 *1	BSET	BNOT	BCLR					BST / BIST								
7Dr07 *1	BSET	BNOT	BCLR													
7Eaa6 *2				BTST												
7Eaa7 *2				BTST	BOR / BIOR	BXOR / BIXOR	BAND / BIAND	BLD / BILD								
7Faa6 *2	BSET	BNOT	BCLR					BST / BIST								
7Faa7 *2	BSET	BNOT	BCLR													

Notes: 1. r is the register designation field.
2. aa is the absolute address field.

A.3 Number of Execution States

The status of execution for each instruction of the H8/300H CPU and the method of calculating the number of states required for instruction execution are shown below. Table A.4 shows the number of cycles of each type occurring in each instruction, such as instruction fetch and data read/write. Table A.3 shows the number of states required for each cycle. The total number of states required for execution of an instruction can be calculated by the following expression:

$$\text{Execution states} = I \times S_I + J \times S_J + K \times S_K + L \times S_L + M \times S_M + N \times S_N$$

Examples: When instruction is fetched from on-chip ROM, and an on-chip RAM is accessed.

BSET #0, @FF00

From table A.4:
$I = L = 2, \quad J = K = M = N = 0$

From table A.3:
$S_I = 2, \quad S_L = 2$

Number of states required for execution = $2 \times 2 + 2 \times 2 = 8$

When instruction is fetched from on-chip ROM, branch address is read from on-chip ROM, and on-chip RAM is used for stack area.

JSR @@ 30

From table A.4:
$I = 2, \quad J = K = 1, \quad L = M = N = 0$

From table A.3:
$S_I = S_J = S_K = 2$

Number of states required for execution = $2 \times 2 + 1 \times 2 + 1 \times 2 = 8$

Table A.3 Number of Cycles in Each Instruction

Execution Status (Instruction Cycle)		Access Location	
		On-Chip Memory	On-Chip Peripheral Module
Instruction fetch	S_I	2	—
Branch address read	S_J		
Stack operation	S_K		
Byte data access	S_L		2 or 3*
Word data access	S_M		—
Internal operation	S_N	1	

Note: * Depends on which on-chip peripheral module is accessed. See section 16.1, Register Addresses.

Table A.4 Number of Cycles in Each Instruction

Instruction	Mnemonic	Instruction Fetch I	Branch Addr. Read J	Stack Operation K	Byte Data Access L	Word Data Access M	Internal Operation N
ADD	ADD.B #xx:8, Rd	1					
	ADD.B Rs, Rd	1					
	ADD.W #xx:16, Rd	2					
	ADD.W Rs, Rd	1					
	ADD.L #xx:32, ERd	3					
	ADD.L ERs, ERd	1					
ADDS	ADDS #1/2/4, ERd	1					
ADDX	ADDX #xx:8, Rd	1					
	ADDX Rs, Rd	1					
AND	AND.B #xx:8, Rd	1					
	AND.B Rs, Rd	1					
	AND.W #xx:16, Rd	2					
	AND.W Rs, Rd	1					
	AND.L #xx:32, ERd	3					
	AND.L ERs, ERd	2					
ANDC	ANDC #xx:8, CCR	1					
BAND	BAND #xx:3, Rd	1					
	BAND #xx:3, @ERd	2			1		
	BAND #xx:3, @aa:8	2			1		
Bcc	BRA d:8 (BT d:8)	2					
	BRN d:8 (BF d:8)	2					
	BHI d:8	2					
	BLS d:8	2					
	BCC d:8 (BHS d:8)	2					
	BCS d:8 (BLO d:8)	2					
	BNE d:8	2					
	BEQ d:8	2					
	BVC d:8	2					
	BVS d:8	2					
	BPL d:8	2					
	BMI d:8	2					
	BGE d:8	2					

Instruction	Mnemonic	Instruction Fetch I	Branch Addr. Read J	Stack Operation K	Byte Data Access L	Word Data Access M	Internal Operation N
Bcc	BLT d:8	2					
	BGT d:8	2					
	BLE d:8	2					
	BRA d:16(BT d:16)	2					2
	BRN d:16(BF d:16)	2					2
	BHI d:16	2					2
	BLS d:16	2					2
	BCC d:16(BHS d:16)	2					2
	BCS d:16(BLO d:16)	2					2
	BNE d:16	2					2
	BEQ d:16	2					2
	BVC d:16	2					2
	BVS d:16	2					2
	BPL d:16	2					2
	BMI d:16	2					2
	BGE d:16	2					2
	BLT d:16	2					2
	BGT d:16	2					2
	BLE d:16	2					2
BCLR	BCLR #xx:3, Rd	1					
	BCLR #xx:3, @ERd	2			2		
	BCLR #xx:3, @aa:8	2			2		
	BCLR Rn, Rd	1					
	BCLR Rn, @ERd	2			2		
	BCLR Rn, @aa:8	2			2		
BIAND	BIAND #xx:3, Rd	1					
	BIAND #xx:3, @ERd	2			1		
	BIAND #xx:3, @aa:8	2			1		
BILD	BILD #xx:3, Rd	1					
	BILD #xx:3, @ERd	2			1		
	BILD #xx:3, @aa:8	2			1		

Instruction	Mnemonic	Instruction Fetch I	Branch Addr. Read J	Stack Operation K	Byte Data Access L	Word Data Access M	Internal Operation N
BIOR	BIOR #xx:8, Rd	1					
	BIOR #xx:8, @ERd	2			1		
	BIOR #xx:8, @aa:8	2			1		
BIST	BIST #xx:3, Rd	1					
	BIST #xx:3, @ERd	2			2		
	BIST #xx:3, @aa:8	2			2		
BIXOR	BIXOR #xx:3, Rd	1					
	BIXOR #xx:3, @ERd	2			1		
	BIXOR #xx:3, @aa:8	2			1		
BLD	BLD #xx:3, Rd	1					
	BLD #xx:3, @ERd	2			1		
	BLD #xx:3, @aa:8	2			1		
BNOT	BNOT #xx:3, Rd	1					
	BNOT #xx:3, @ERd	2			2		
	BNOT #xx:3, @aa:8	2			2		
	BNOT Rn, Rd	1					
	BNOT Rn, @ERd	2			2		
	BNOT Rn, @aa:8	2			2		
BOR	BOR #xx:3, Rd	1					
	BOR #xx:3, @ERd	2			1		
	BOR #xx:3, @aa:8	2			1		
BSET	BSET #xx:3, Rd	1					
	BSET #xx:3, @ERd	2			2		
	BSET #xx:3, @aa:8	2			2		
	BSET Rn, Rd	1					
	BSET Rn, @ERd	2			2		
	BSET Rn, @aa:8	2			2		
BSR	BSR d:8	2		1			
	BSR d:16	2		1			2
BST	BST #xx:3, Rd	1					
	BST #xx:3, @ERd	2			2		
	BST #xx:3, @aa:8	2			2		

Instruction	Mnemonic	Instruction Fetch I	Branch Addr. Read J	Stack Operation K	Byte Data Access L	Word Data Access M	Internal Operation N
BTST	BTST #xx:3, Rd	1					
	BTST #xx:3, @ERd	2			1		
	BTST #xx:3, @aa:8	2			1		
	BTST Rn, Rd	1					
	BTST Rn, @ERd	2			1		
	BTST Rn, @aa:8	2			1		
BXOR	BXOR #xx:3, Rd	1					
	BXOR #xx:3, @ERd	2			1		
	BXOR #xx:3, @aa:8	2			1		
CMP	CMP.B #xx:8, Rd	1					
	CMP.B Rs, Rd	1					
	CMP.W #xx:16, Rd	2					
	CMP.W Rs, Rd	1					
	CMP.L #xx:32, ERd	3					
	CMP.L ERs, ERd	1					
DAA	DAA Rd	1					
DAS	DAS Rd	1					
DEC	DEC.B Rd	1					
	DEC.W #1/2, Rd	1					
	DEC.L #1/2, ERd	1					
DUVXS	DIVXS.B Rs, Rd	2					12
	DIVXS.W Rs, ERd	2					20
DIVXU	DIVXU.B Rs, Rd	1					12
	DIVXU.W Rs, ERd	1					20
EEPMOV	EEPMOV.B	2			2n+2*[1]		
	EEPMOV.W	2			2n+2*[1]		
EXTS	EXTS.W Rd	1					
	EXTS.L ERd	1					
EXTU	EXTU.W Rd	1					
	EXTU.L ERd	1					

Instruction	Mnemonic	Instruction Fetch I	Branch Addr. Read J	Stack Operation K	Byte Data Access L	Word Data Access M	Internal Operation N
INC	INC.B Rd	1					
	INC.W #1/2, Rd	1					
	INC.L #1/2, ERd	1					
JMP	JMP @ERn	2					
	JMP @aa:24	2					2
	JMP @@aa:8	2	1				2
JSR	JSR @ERn	2		1			
	JSR @aa:24	2		1			2
	JSR @@aa:8	2	1	1			
LDC	LDC #xx:8, CCR	1					
	LDC Rs, CCR	1					
	LDC@ERs, CCR	2				1	
	LDC@(d:16, ERs), CCR	3				1	
	LDC@(d:24,ERs), CCR	5				1	
	LDC@ERs+, CCR	2				1	2
	LDC@aa:16, CCR	3				1	
	LDC@aa:24, CCR	4				1	
MOV	MOV.B #xx:8, Rd	1					
	MOV.B Rs, Rd	1					
	MOV.B @ERs, Rd	1			1		
	MOV.B @(d:16, ERs), Rd	2			1		
	MOV.B @(d:24, ERs), Rd	4			1		
	MOV.B @ERs+, Rd	1			1		2
	MOV.B @aa:8, Rd	1			1		
	MOV.B @aa:16, Rd	2			1		
	MOV.B @aa:24, Rd	3			1		
	MOV.B Rs, @Erd	1			1		
	MOV.B Rs, @(d:16, ERd)	2			1		
	MOV.B Rs, @(d:24, ERd)	4			1		
	MOV.B Rs, @-ERd	1			1		2
	MOV.B Rs, @aa:8	1			1		

Instruction	Mnemonic	Instruction Fetch I	Branch Addr. Read J	Stack Operation K	Byte Data Access L	Word Data Access M	Internal Operation N
MOV	MOV.B Rs, @aa:16	2			1		
	MOV.B Rs, @aa:24	3			1		
	MOV.W #xx:16, Rd	2					
	MOV.W Rs, Rd	1					
	MOV.W @ERs, Rd	1				1	
	MOV.W @(d:16,ERs), Rd	2				1	
	MOV.W @(d:24,ERs), Rd	4				1	
	MOV.W @ERs+, Rd	1				1	2
	MOV.W @aa:16, Rd	2				1	
	MOV.W @aa:24, Rd	3				1	
	MOV.W Rs, @ERd	1				1	
	MOV.W Rs, @(d:16,ERd)	2				1	
	MOV.W Rs, @(d:24,ERd)	4				1	
MOV	MOV.W Rs, @-ERd	1				1	2
	MOV.W Rs, @aa:16	2				1	
	MOV.W Rs, @aa:24	3				1	
	MOV.L #xx:32, ERd	3					
	MOV.L ERs, ERd	1					
	MOV.L @ERs, ERd	2				2	
	MOV.L @(d:16,ERs), ERd	3				2	
	MOV.L @(d:24,ERs), ERd	5				2	
	MOV.L @ERs+, ERd	2				2	2
	MOV.L @aa:16, ERd	3				2	
	MOV.L @aa:24, ERd	4				2	
	MOV.L ERs,@ERd	2				2	
	MOV.L ERs, @(d:16,ERd)	3				2	
	MOV.L ERs, @(d:24,ERd)	5				2	
	MOV.L ERs, @-ERd	2				2	2
	MOV.L ERs, @aa:16	3				2	
	MOV.L ERs, @aa:24	4				2	
MOVFPE	MOVFPE @aa:16, Rd*[2]	2			1		
MOVTPE	MOVTPE Rs,@aa:16*[2]	2			1		

Instruction	Mnemonic	Instruction Fetch I	Branch Addr. Read J	Stack Operation K	Byte Data Access L	Word Data Access M	Internal Operation N
MULXS	MULXS.B Rs, Rd	2					12
	MULXS.W Rs, ERd	2					20
MULXU	MULXU.B Rs, Rd	1					12
	MULXU.W Rs, ERd	1					20
NEG	NEG.B Rd	1					
	NEG.W Rd	1					
	NEG.L ERd	1					
NOP	NOP	1					
NOT	NOT.B Rd	1					
	NOT.W Rd	1					
	NOT.L ERd	1					
OR	OR.B #xx:8, Rd	1					
	OR.B Rs, Rd	1					
	OR.W #xx:16, Rd	2					
	OR.W Rs, Rd	1					
	OR.L #xx:32, ERd	3					
	OR.L ERs, ERd	2					
ORC	ORC #xx:8, CCR	1					
POP	POP.W Rn	1				1	2
	POP.L ERn	2				2	2
PUSH	PUSH.W Rn	1				1	2
	PUSH.L ERn	2				2	2
ROTL	ROTL.B Rd	1					
	ROTL.W Rd	1					
	ROTL.L ERd	1					
ROTR	ROTR.B Rd	1					
	ROTR.W Rd	1					
	ROTR.L ERd	1					
ROTXL	ROTXL.B Rd	1					
	ROTXL.W Rd	1					
	ROTXL.L ERd	1					

Instruction	Mnemonic	Instruction Fetch I	Branch Addr. Read J	Stack Operation K	Byte Data Access L	Word Data Access M	Internal Operation N
ROTXR	ROTXR.B Rd	1					
	ROTXR.W Rd	1					
	ROTXR.L ERd	1					
RTE	RTE	2		2			2
RTS	RTS	2		1			2
SHAL	SHAL.B Rd	1					
	SHAL.W Rd	1					
	SHAL.L ERd	1					
SHAR	SHAR.B Rd	1					
	SHAR.W Rd	1					
	SHAR.L ERd	1					
SHLL	SHLL.B Rd	1					
	SHLL.W Rd	1					
	SHLL.L ERd	1					
SHLR	SHLR.B Rd	1					
	SHLR.W Rd	1					
	SHLR.L ERd	1					
SLEEP	SLEEP	1					
STC	STC CCR, Rd	1					
	STC CCR, @ERd	2				1	
	STC CCR, @(d:16,ERd)	3				1	
	STC CCR, @(d:24,ERd)	5				1	
	STC CCR,@-ERd	2				1	2
	STC CCR, @aa:16	3				1	
	STC CCR, @aa:24	4				1	
SUB	SUB.B Rs, Rd	1					
	SUB.W #xx:16, Rd	2					
	SUB.W Rs, Rd	1					
	SUB.L #xx:32, ERd	3					
	SUB.L ERs, ERd	1					
SUBS	SUBS #1/2/4, ERd	1					

Instruction	Mnemonic	Instruction Fetch I	Branch Addr. Read J	Stack Operation K	Byte Data Access L	Word Data Access M	Internal Operation N
SUBX	SUBX #xx:8, Rd	1					
	SUBX. Rs, Rd	1					
TRAPA	TRAPA #xx:2	2	1	2			4
XOR	XOR.B #xx:8, Rd	1					
	XOR.B Rs, Rd	1					
	XOR.W #xx:16, Rd	2					
	XOR.W Rs, Rd	1					
	XOR.L #xx:32, ERd	3					
	XOR.L ERs, ERd	2					
XORC	XORC #xx:8, CCR	1					

Note: 1. n:specified value in R4L and R4. The source and destination operands are accessed n+1 times respectively.

2. Cannot be used in this LSI.

A.4 Combinations of Instructions and Addressing Modes

Table A.5 Combinations of Instructions and Addressing Modes

Functions	Instructions	Addressing Mode												
		#xx	Rn	@ERn	@(d:16.ERn)	@(d:24.ERn)	@ERn+/@ERn	@aa:8	@aa:16	@aa:24	@(d:8.PC)	@(d:16.PC)	@@aa:8	—
Data transfer instructions	MOV	BWL	BWL	BWL	BWL	BWL	BWL	B	BWL	BWL	—	—	—	—
	POP, PUSH	—	—	—	—	—	—	—	—	—	—	—	—	WL
	MOVFPE, MOVTPE	—	—	—	—	—	—	—	—	—	—	—	—	—
Arithmetic operations	ADD, CMP	BWL	BWL	—	—	—	—	—	—	—	—	—	—	—
	SUB	WL	BWL	—	—	—	—	—	—	—	—	—	—	—
	ADDX, SUBX	B	B	—	—	—	—	—	—	—	—	—	—	—
	ADDS, SUBS	—	L	—	—	—	—	—	—	—	—	—	—	—
	INC, DEC	—	BWL	—	—	—	—	—	—	—	—	—	—	—
	DAA, DAS	—	B	—	—	—	—	—	—	—	—	—	—	—
	MULXU, MULXS, DIVXU, DIVXS	—	BW	—	—	—	—	—	—	—	—	—	—	—
	NEG	—	BWL	—	—	—	—	—	—	—	—	—	—	—
	EXTU, EXTS	—	WL	—	—	—	—	—	—	—	—	—	—	—
Logical operations	AND, OR, XOR	—	BWL	—	—	—	—	—	—	—	—	—	—	—
	NOT	—	BWL	—	—	—	—	—	—	—	—	—	—	—
Shift operations		—	BWL	—	—	—	—	—	—	—	—	—	—	—
Bit manipulations		—	B	B	—	—	—	B	—	—	—	—	—	—
Branching instructions	BCC, BSR	—	—	—	—	—	—	—	—	—	—	—	—	—
	JMP, JSR	—	—	○	—	—	—	—	—	—	○	○	—	—
	RTS	—	—	—	—	—	—	—	—	○	—	—	○	—
System control instructions	TRAPA	—	—	—	—	—	—	—	—	—	—	—	—	○
	RTE	—	—	—	—	—	—	—	—	—	—	—	—	○
	SLEEP	—	—	—	—	—	—	—	—	—	—	—	—	○
	LDC	B	B	W	W	W	W	—	W	W	—	—	—	○
	STC	—	B	W	W	W	W	—	W	W	—	—	—	—
	ANDC, ORC, XORC	B	—	—	—	—	—	—	—	—	—	—	—	—
	NOP	—	—	—	—	—	—	—	—	—	—	—	—	○
Block data transfer instructions		—	—	—	—	—	—	—	—	—	—	—	—	BW

Appendix B I/O Port Block Diagrams

B.1 I/O Port Block

$\overline{RES}$ goes low in a reset, and $\overline{SBY}$ goes low in a reset and in standby mode.

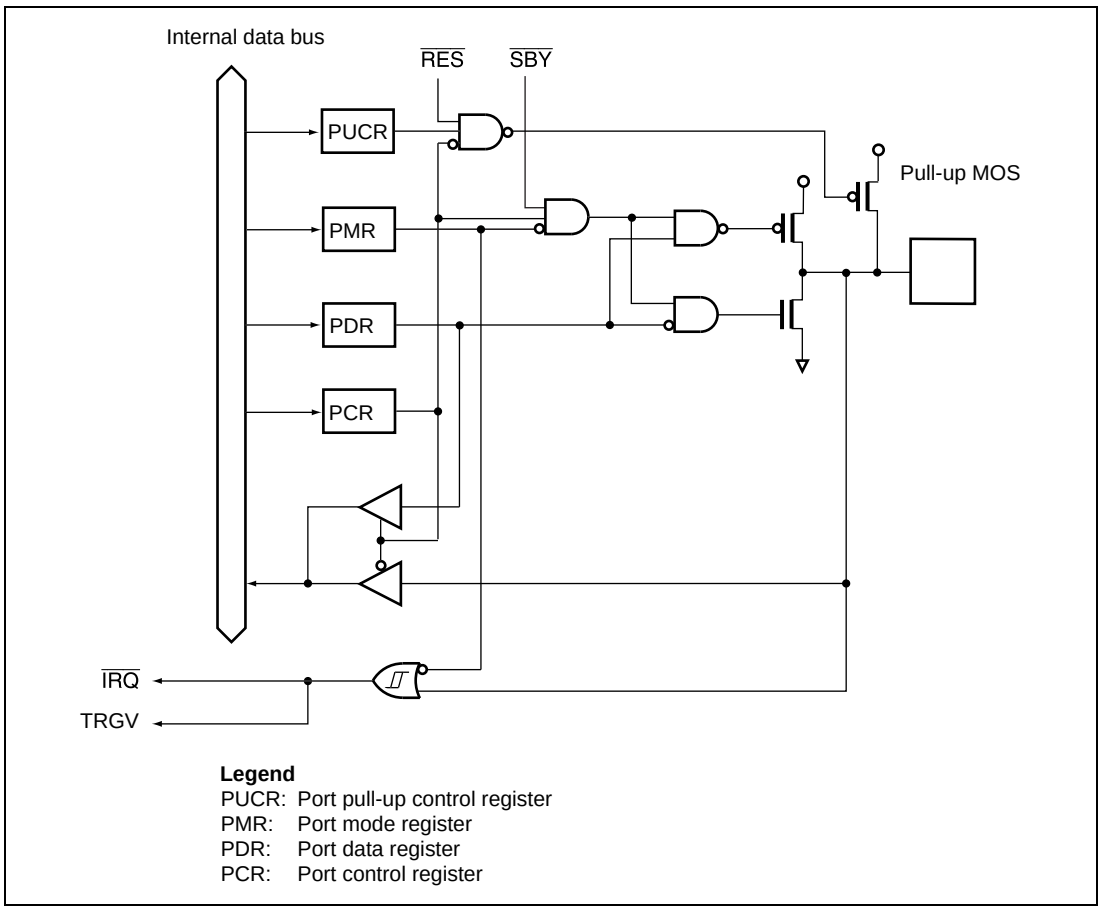

Figure B.1 Port 1 Block Diagram (P17)

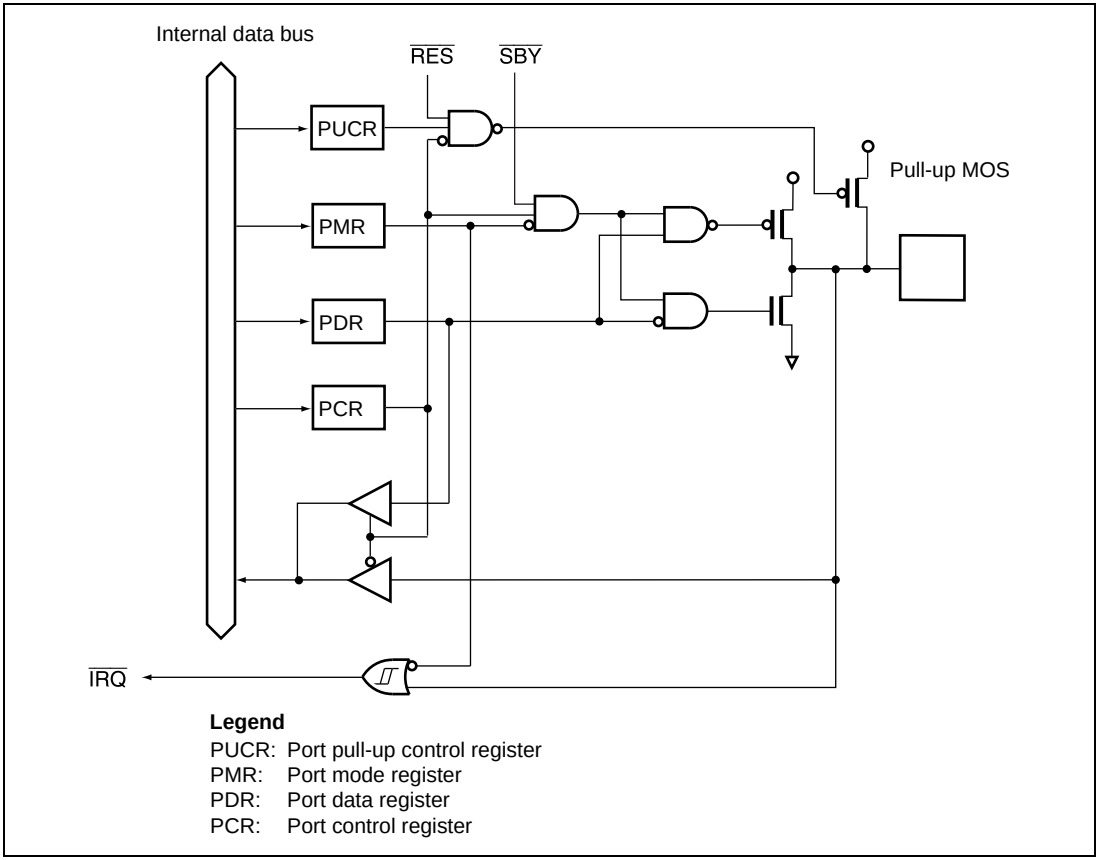

Figure B.2 Port 1 Block Diagram (P14)

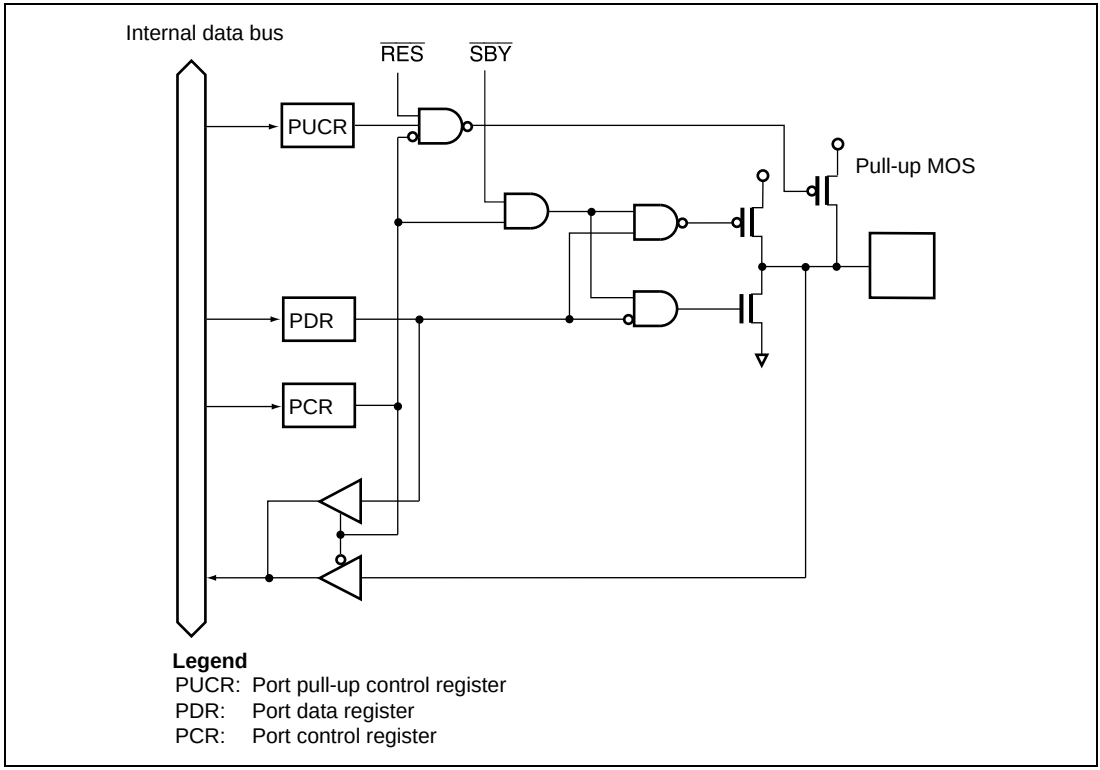

Figure B.3 Port 1 Block Diagram (P16, P15, P12, P10)

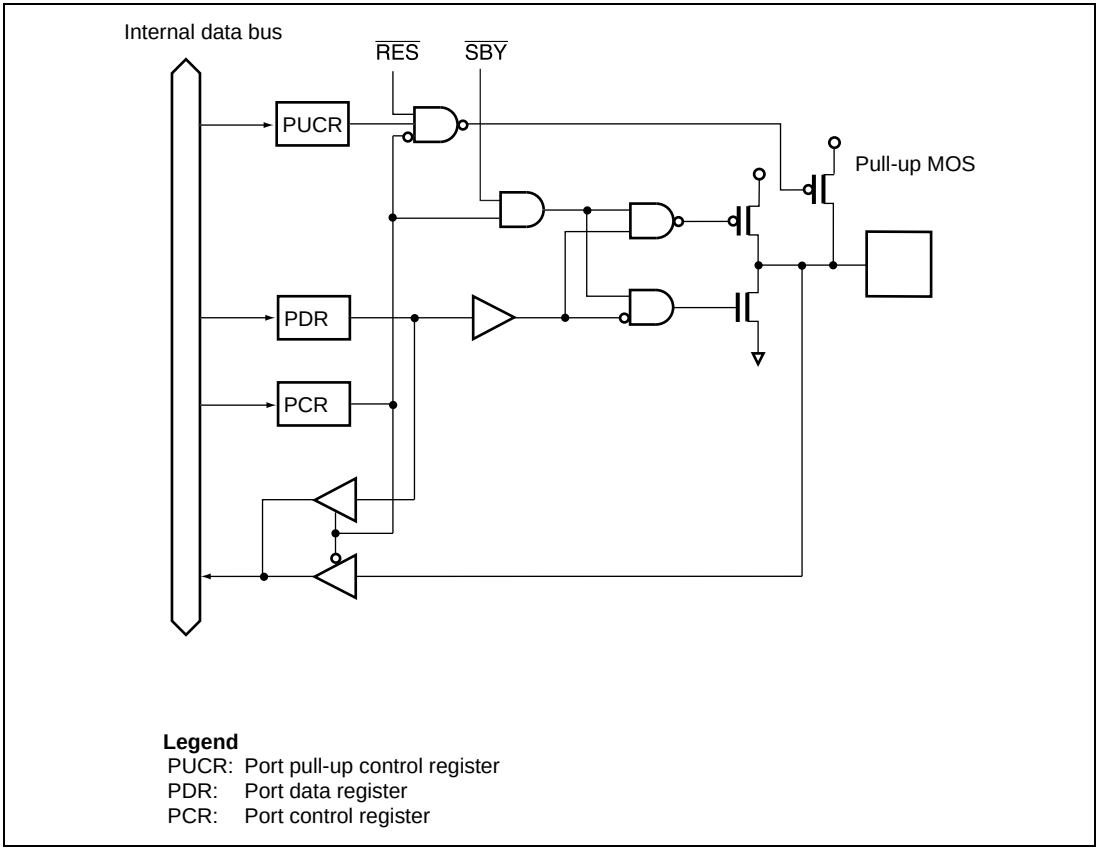

Figure B.4 Port 1 Block Diagram (P11)

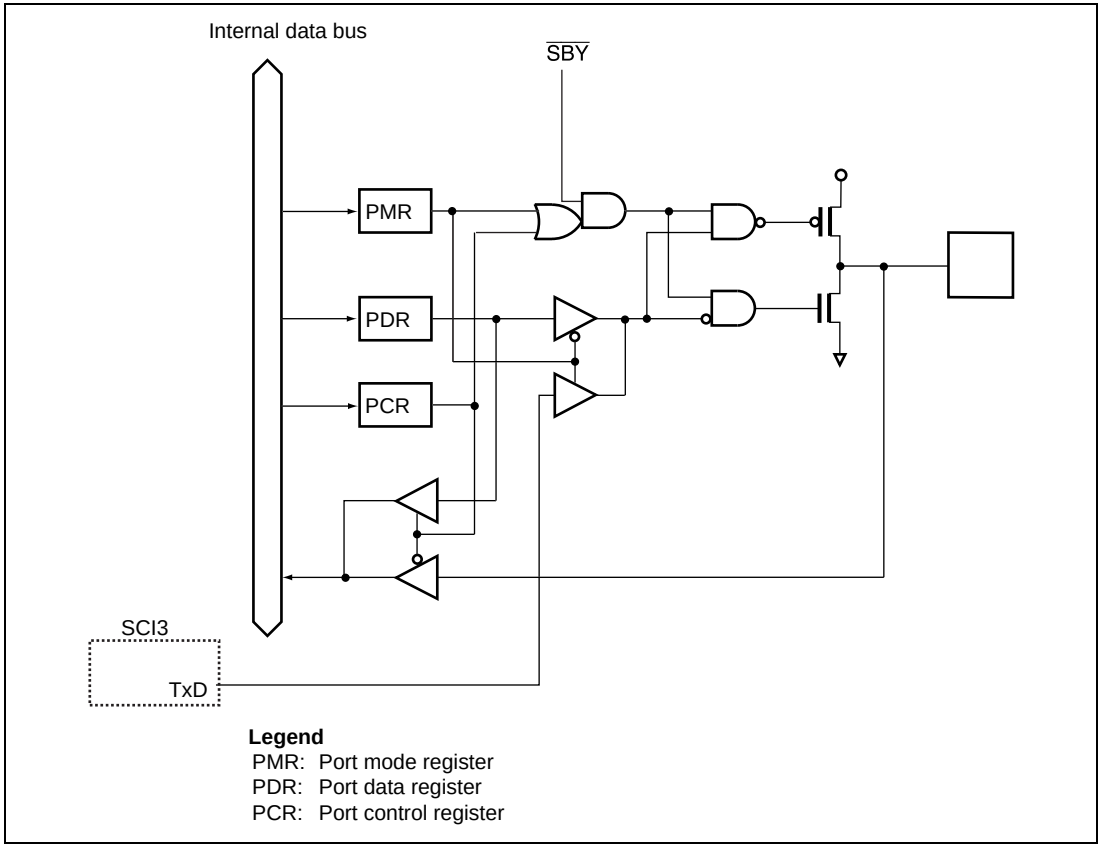

Figure B.5 Port 2 Block Diagram (P22)

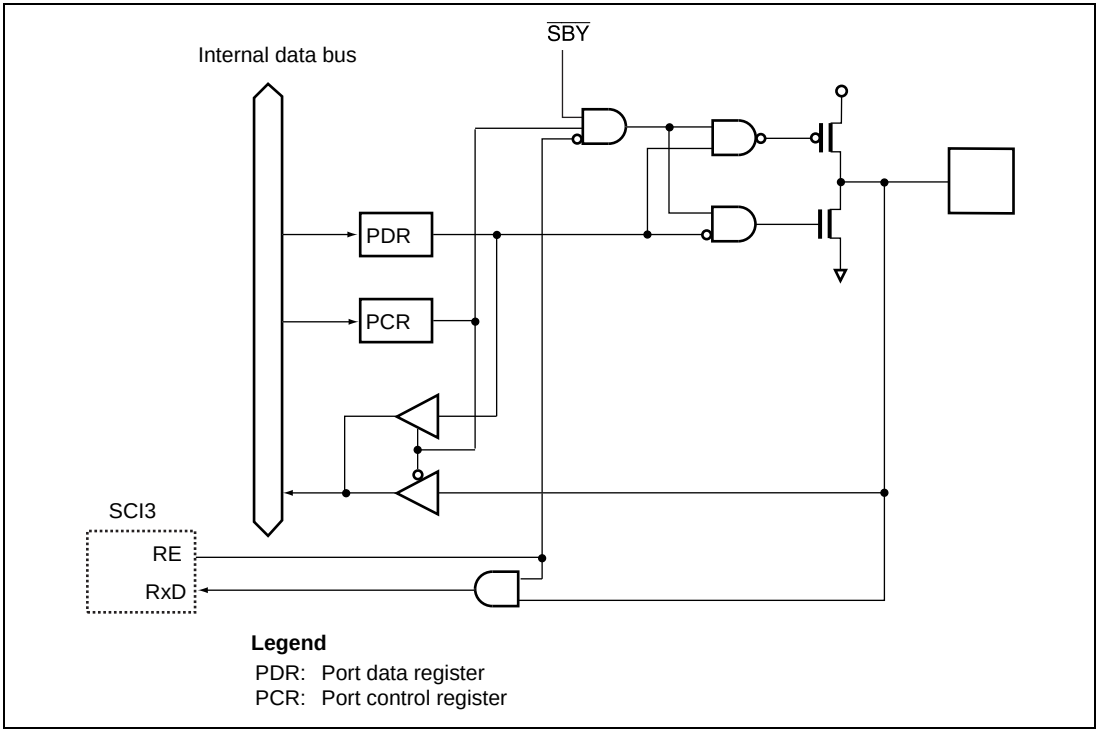

Figure B.6 Port 2 Block Diagram (P21)

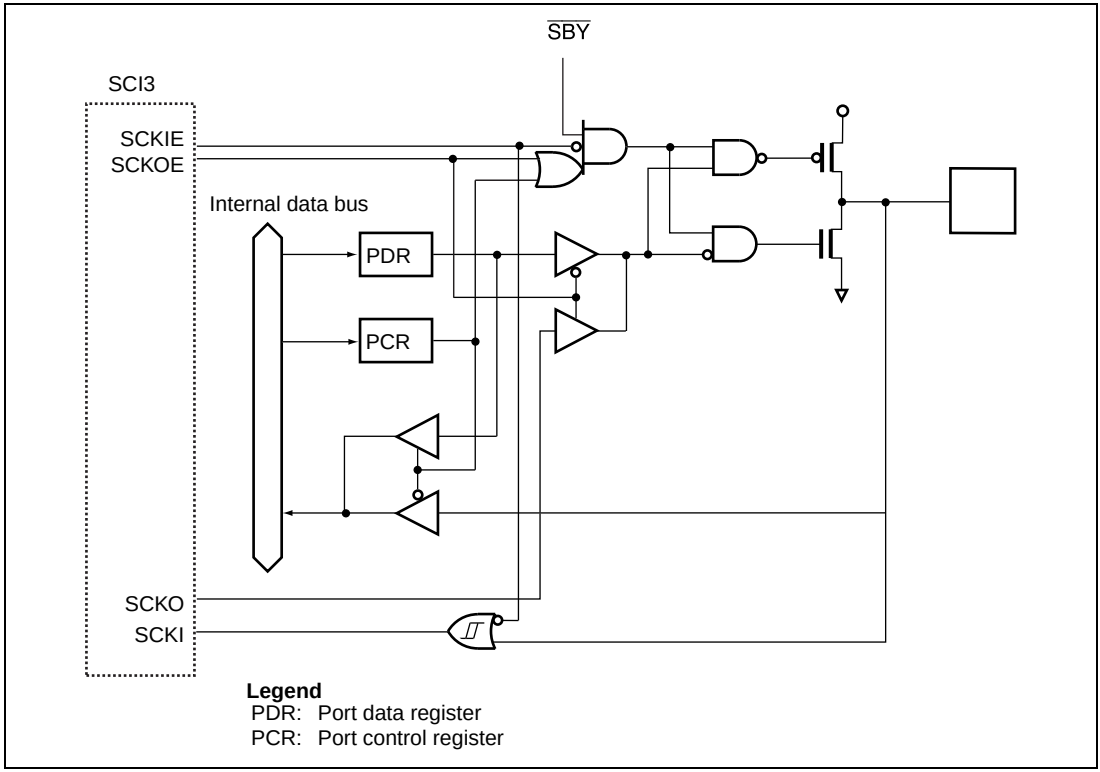

Figure B.7 Port 2 Block Diagram (P20)

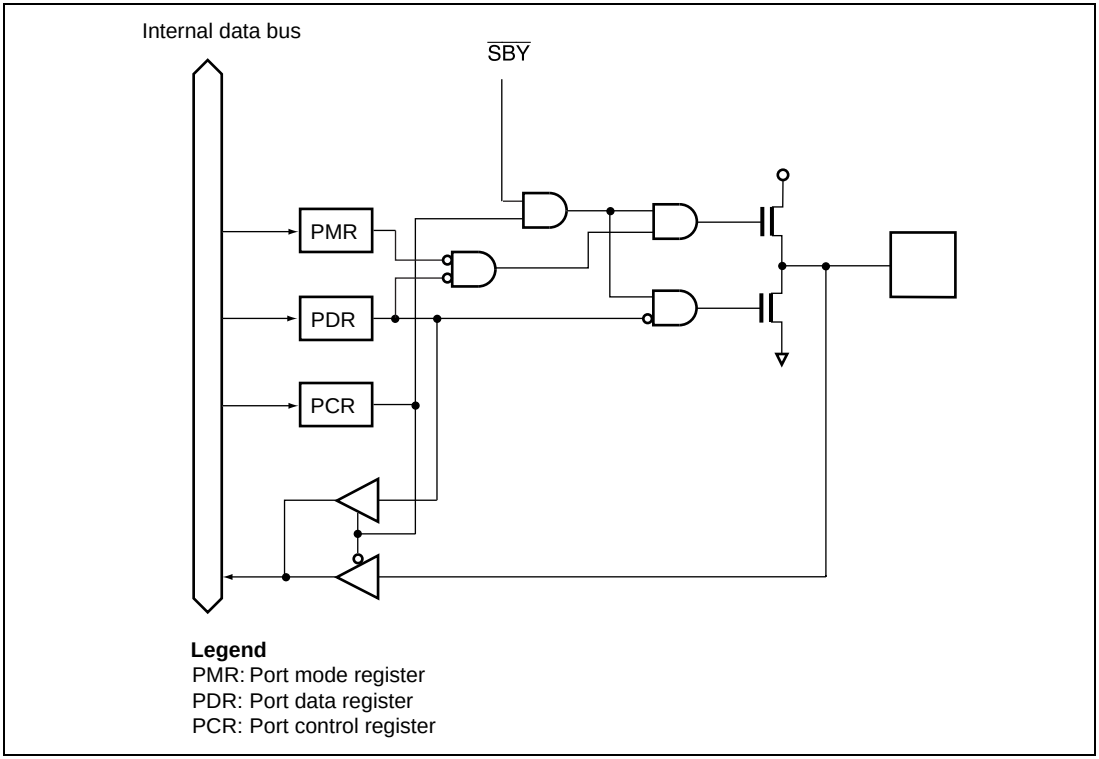

Figure B.8 Port 5 Block Diagram (P57, P56)

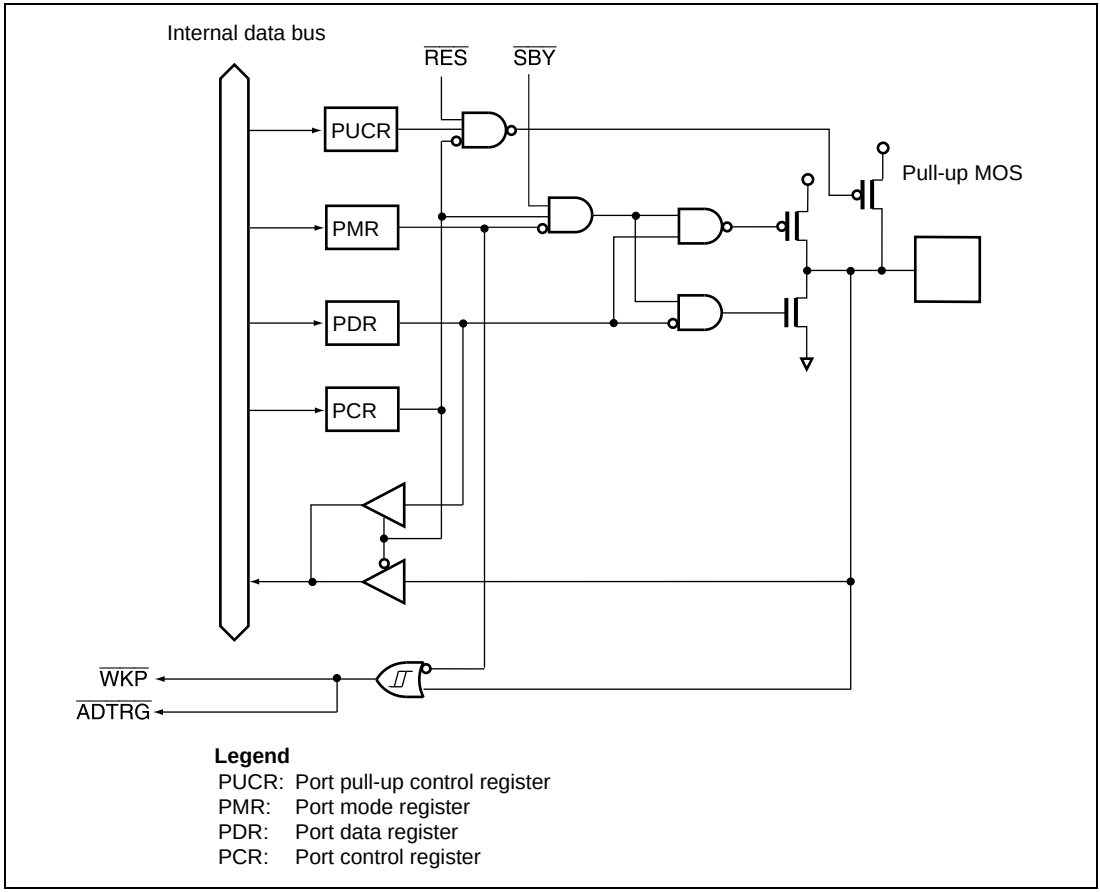

Figure B.9 Port 5 Block Diagram (P55)

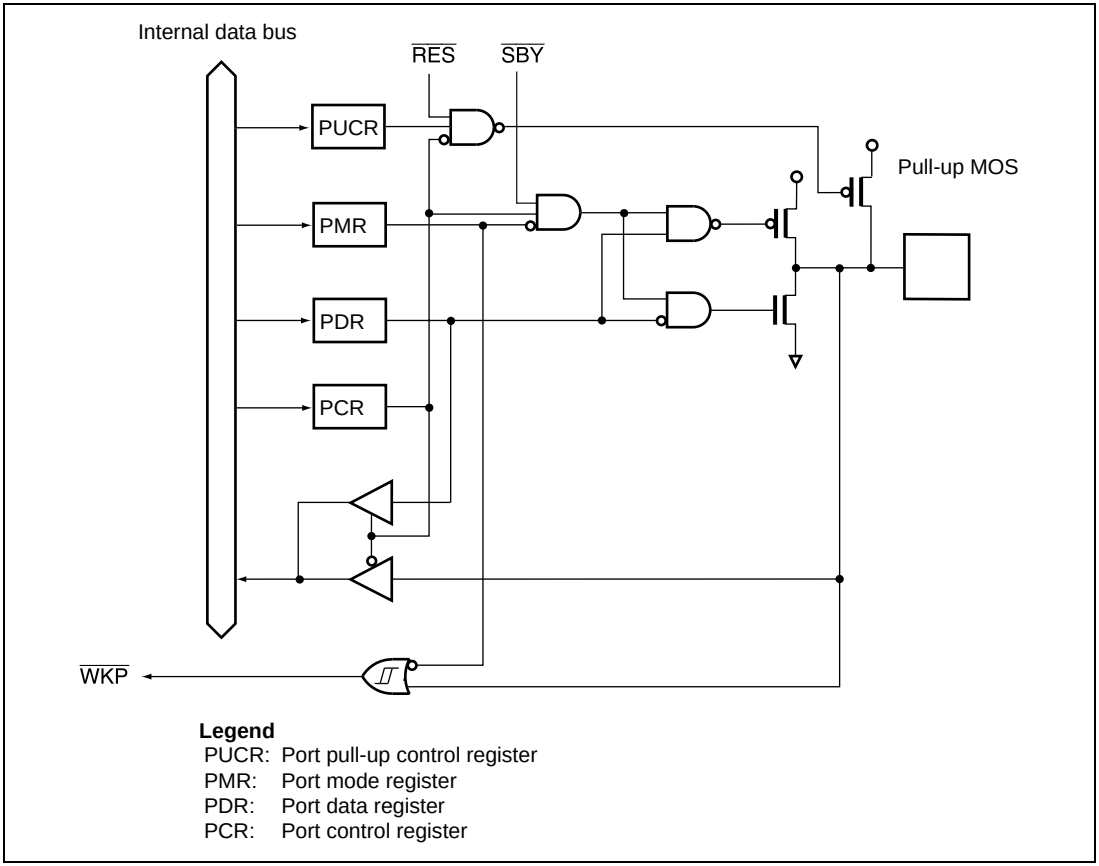

Figure B.10 Port 5 Block Diagram (P54 to P50)

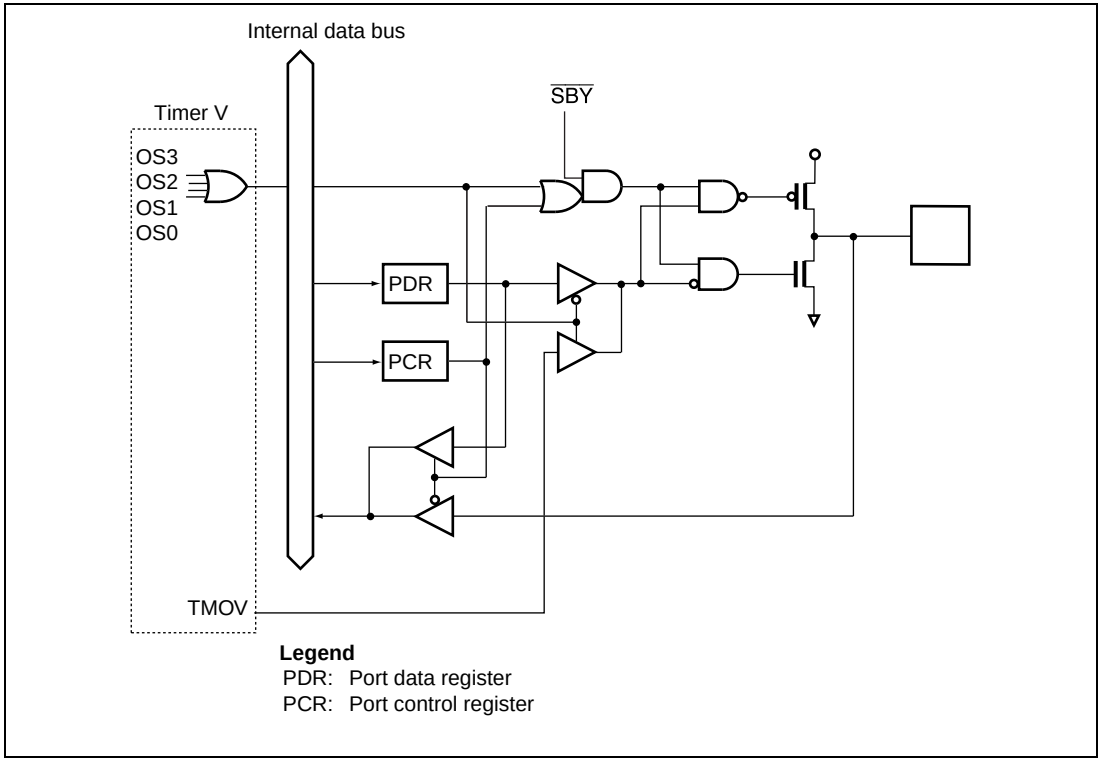

Figure B.11 Port 7 Block Diagram (P76)

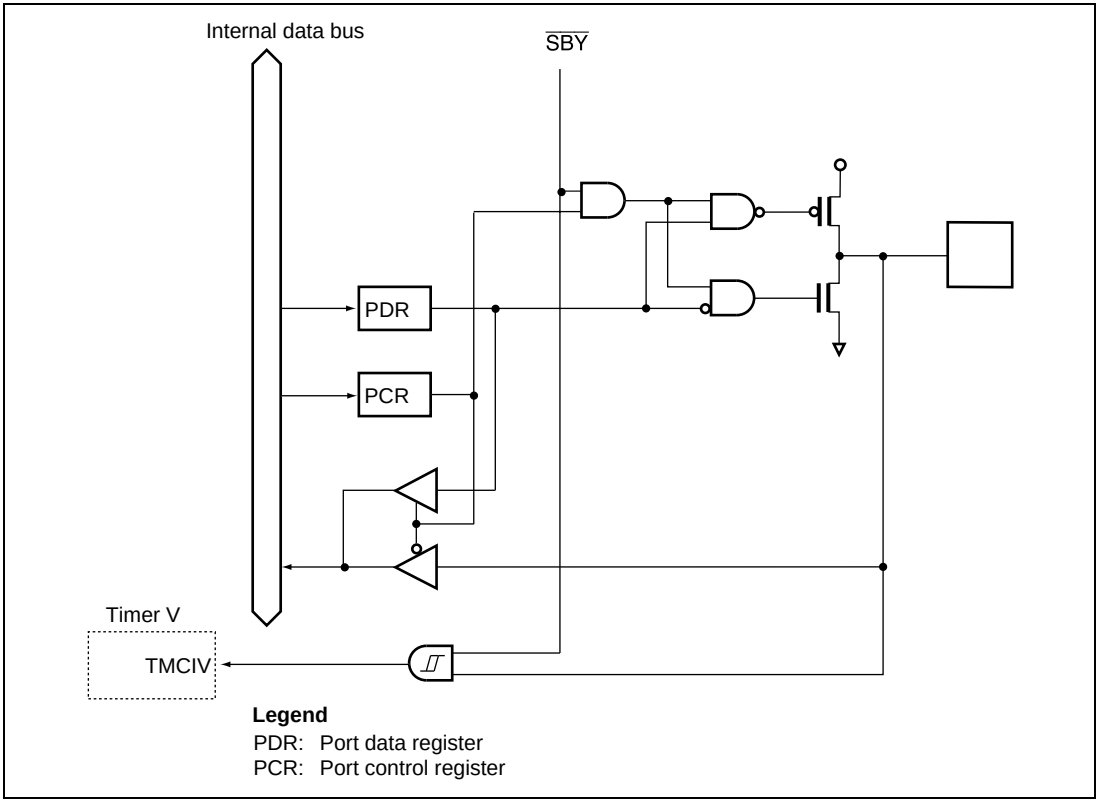

Figure B.12 Port 7 Block Diagram (P75)

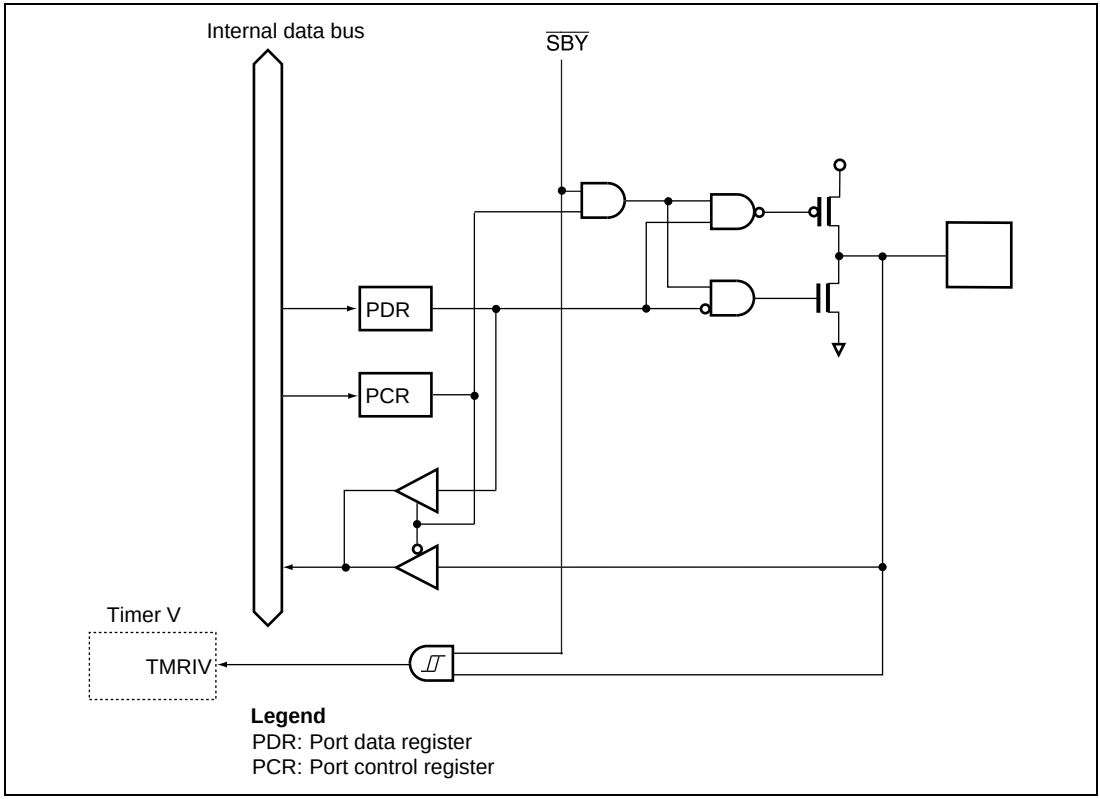

Figure B.13 Port 7 Block Diagram (P74)

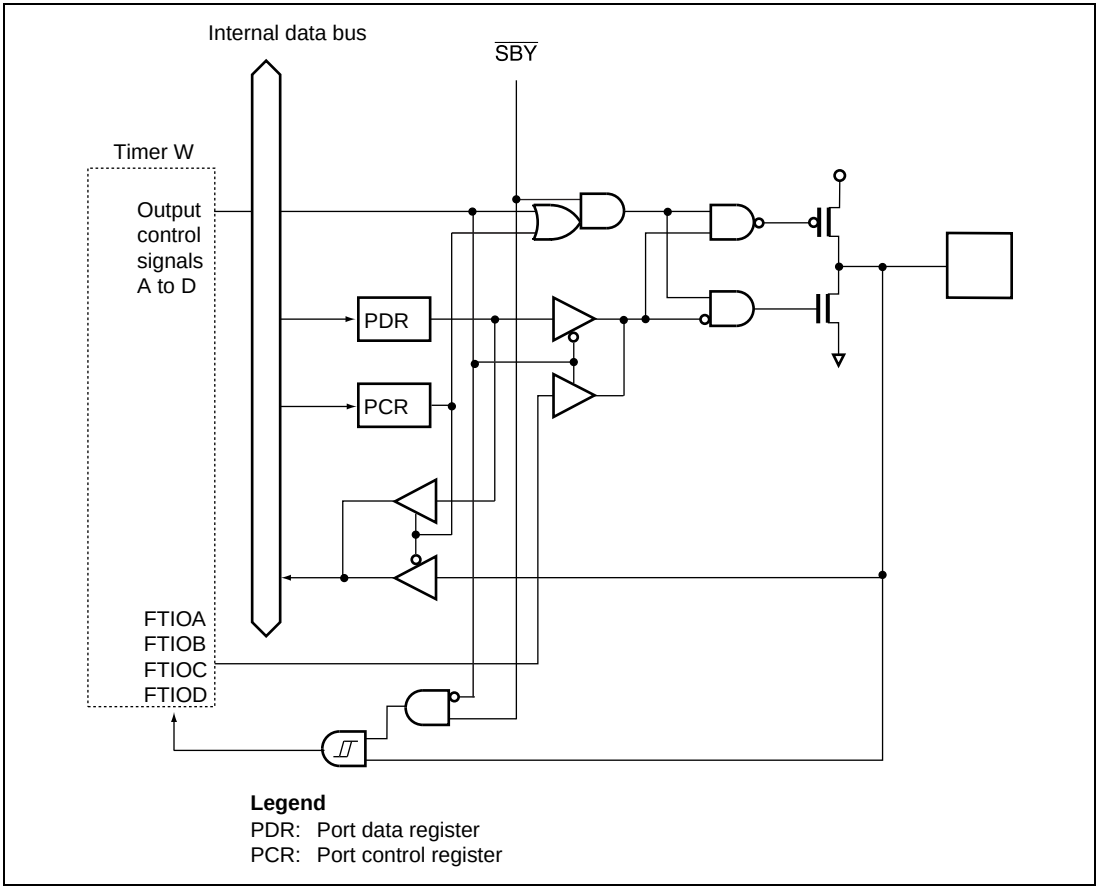

Figure B.14 Port 8 Block Diagram (P84 to P81)

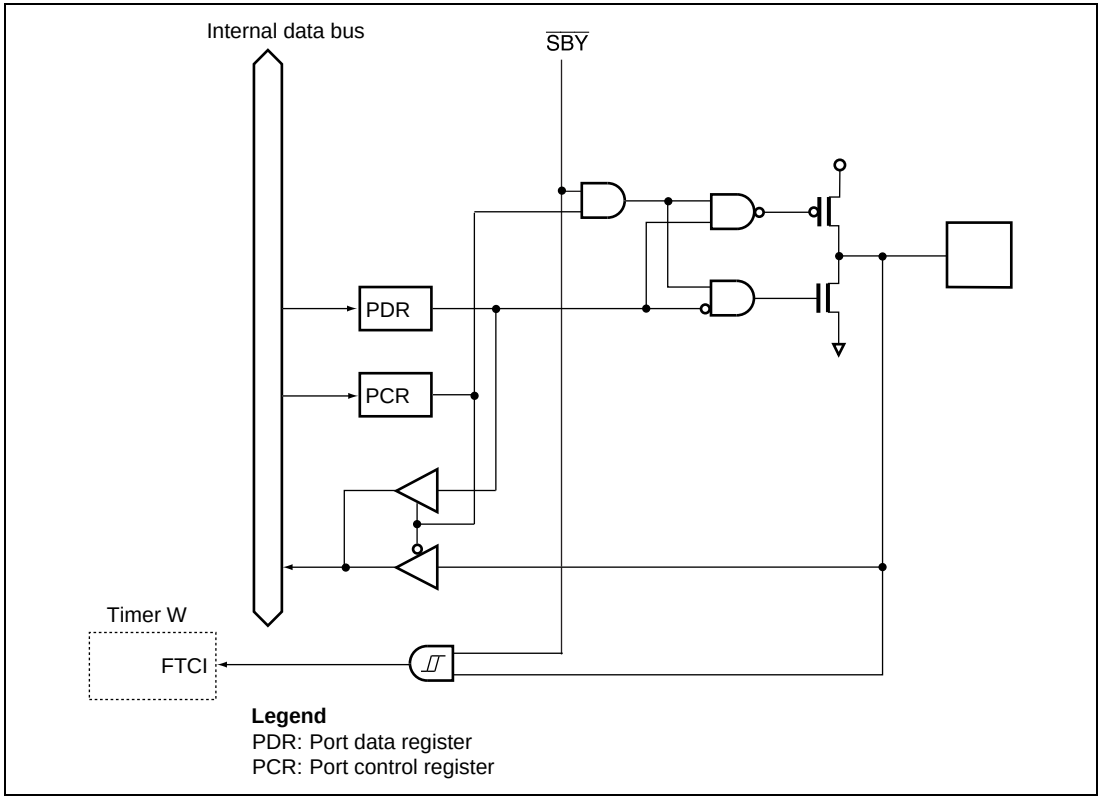

Figure B.15 Port 8 Block Diagram (P80)

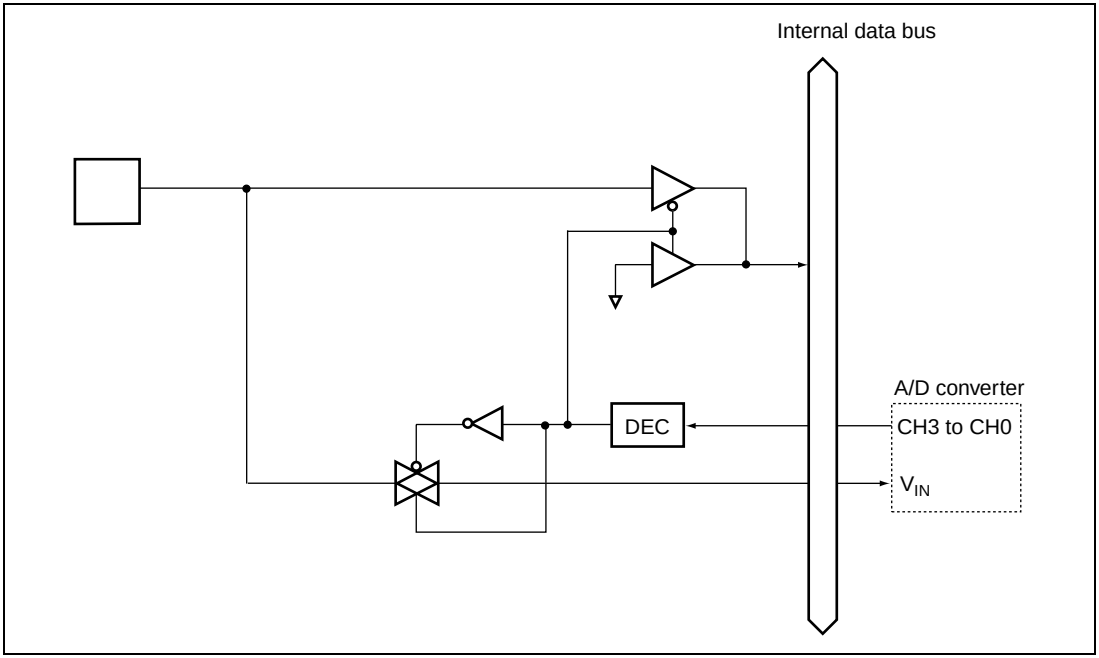

Figure B.16 Port B Block Diagram (PB3 to PB0)

B.2 Port States in Each Operating State

Port	Reset	Active	Sleep	Subsleep	Standby
P17 to P14, P12 to P10	High impedance	Functioning	Retained	Retained	High impedance*
P22 to P20	High impedance	Functioning	Retained	Retained	High impedance
P57 to P50	High impedance	Functioning	Retained	Retained	High impedance*
P76 to P74	High impedance	Functioning	Retained	Retained	High impedance
P84 to P80	High impedance	Functioning	Retained	Retained	High impedance
PB3 to PB0	High impedance	High impedance	High impedance	Retained	High impedance

Note: * High level output when the pull-up MOS is in on state.

Appendix C Product Code Lineup

Product Type			Product Code	Model Marking	Package (Hitachi Package Code)
H8/3672	Flash memory version	Standard product	HD64F3672FP	HD64F3672FP	LQFP-64 (FP-64E)
			HD64F3672FX	HD64F3672FX	LQFP-48 (FP-48F)
			HD64F3672FY	HD64F3672FY	LQFP-48 (FP-48B)
H8/3670	Flash memory version	Standard product	HD64F3672FP	HD64F3672FP	LQFP-64 (FP-64E)
			HD64F3670FX	HD64F3670FX	LQFP-48 (FP-48F)
			HD64F3670FY	HD64F3670FY	LQFP-48 (FP-48B)

Appendix D Package Dimensions

The package dimensions that are shows in the Hitachi Semiconductor Packages Data Book have priority.

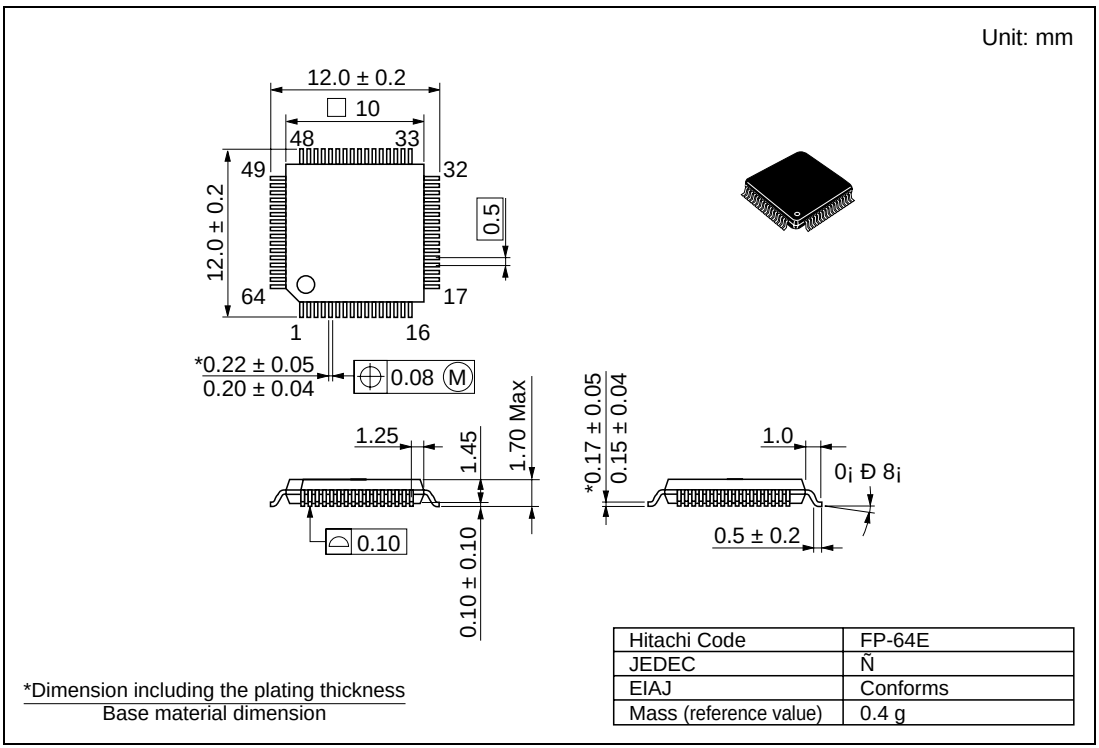

Hitachi Code	FP-64E
JEDEC	Ñ
EIAJ	Conforms
Mass (reference value)	0.4 g

Figure D.1 FP-64E Package Dimensions

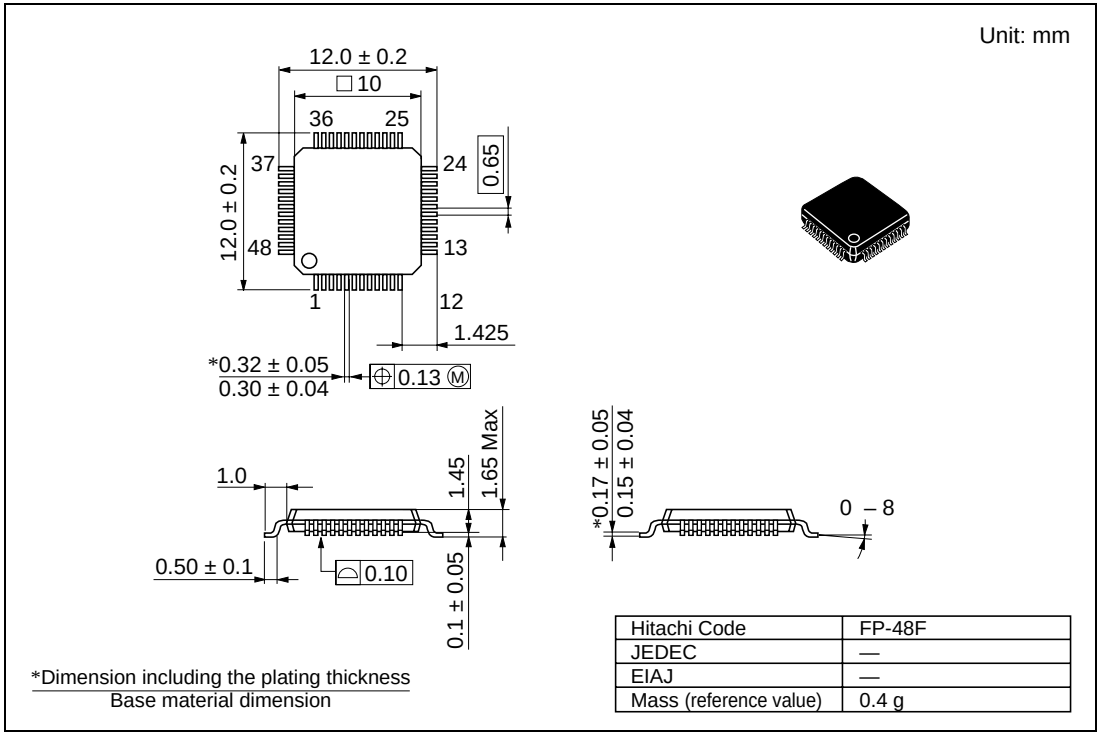

Hitachi Code	FP-48F
JEDEC	—
EIAJ	—
Mass (reference value)	0.4 g

Figure D.2 FP-48F Package Dimensions

As of January, 2002

Unit: mm

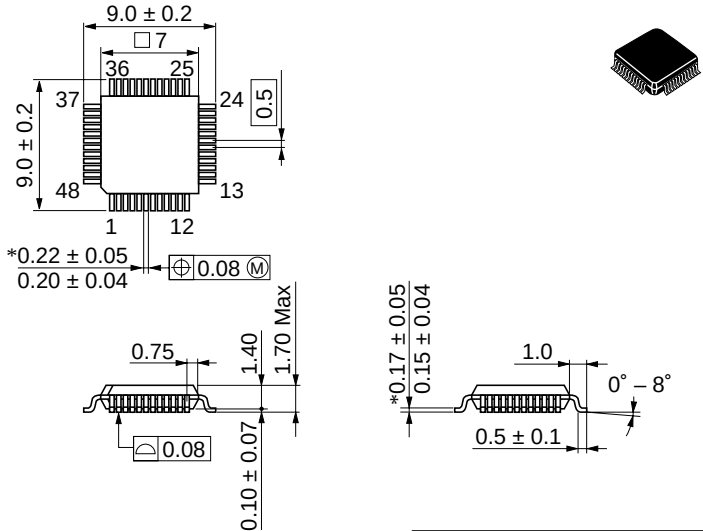

Hitachi Code	FP-48B
JEDEC	—
JEITA	—
Mass (reference value)	0.2 g

*Dimension including the plating thickness / Base material dimension

Figure D.3 FP-48B Package Dimensions

Main Revisions and Additions in this Edition

Item	Page	Revisions (See Manual for Details)	Rev.
General Precautions on Handling of Product	iii	Added.	2.0
Configuration of This Manual	iv	Added.	2.0
Preface	v	Notes added. Restrictions 1 to 5 when using an on-chip emulator (E10T) for H8/3672 program development and debugging	2.0
1.1 Features Compact package	1	Package added. LQFP-48 (FP-48B)	2.0
1.2 Internal Block Diagram Figure 1.1 Internal Block Diagram	2	↔ E10T_0 ↔ E10T_1 ↔ E10T_2	2.0
1.3 Pin Arrangement Figure 1.2 Pin Arrangement (FP-64E)	3	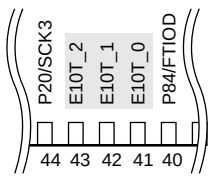 Note: Do not connect NC pins (these pins are not connected to the internal circuitry).	2.0
1.3 Pin Arrangement Figure 1.3 Pin Arrangement (FP-48F, FP-48B)	4	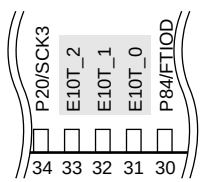 Note: Do not connect NC pins (these pins are not connected to the internal circuitry).	2.0
1.4 Pin Functions Table 1.1 Pin Functions	6	Syrial communication interface (SCI): TXD 46 36 Output; RXD 45 35 Input; SCK3 44 34 I/O	2.0

Item	Page	Revisions (See Manual for Details)	Rev.
1.4 Pin Functions Table 1.1 Pin Functions	6	E10T E10T_0, E10T_1, E10T_2 41, 42, 43 31, 32, 33 Interface pin for E10T emulator	2.0
2.1 Address Space and Memory Map Figure 2.1 Memory Map	8	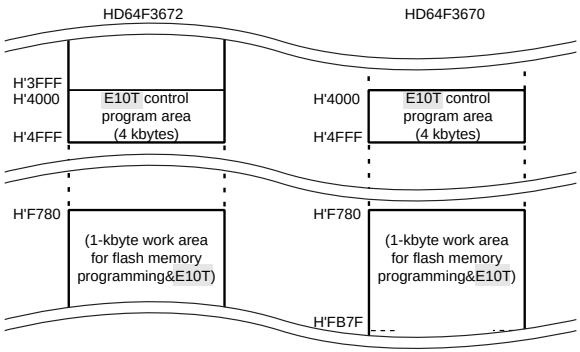	2.0
4.1.1 Address Break Control Register (ABRKCR)	56	**Bit** / **Bit Name** / **Description** 4 ACMP2 3 ACMP1 2 ACMP0 Address Compare Condition Select 2 to 0 These bits comparison condition between the address set in BAR and the internal address bus. 000: Compares 16-bit addresses 001: Compares upper 12-bit addresses 010: Compares upper 8-bit addresses 011: Compares upper 4-bit addresses 1XX: Reserved (setting prohibited)	2.0
4.2 Operation	58	Description amended. When the ABIF and ABIE bits in ABRKSR are set to 1, the address break function generates an interrupt request to the CPU. The ABIF bit in ABRKSR is set to 1 by the combination of the address set in BAR, the data set in BDR, and the conditions set in ABRKCR.	2.0
4.2 Operation Figure 4.2 Address Break Interrupt Operation Example (3)	59	Deleted.	2.0
4.3 Usage Notes	59	Added.	2.0

Item	Page	Revisions (See Manual for Details)	Rev.
5.1 System Clock Generator Figure 5.2 Block Diagram of System Clock Generator	61	Added. 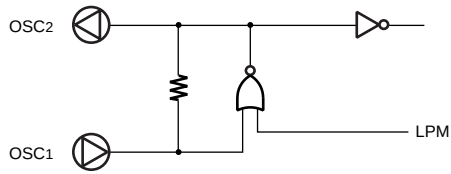 LPM: Low-power mode (standby mode, subsleep mode)	2.0
5.2.1 Prescaler S	63	Description amended. In active mode and sleep mode, the clock input to prescaler S is determined by the division factor designated by MA2 to MA0 in SYSCR2.	2.0
6.1.1 System Control Register 1 (SYSCR1)	66	**Bit** / **Bit Name** / **Description** 6 STS2 5 STS1 4 STS0 Standby Timer Select 2 to 0 These bits designate the time the CPU and peripheral modules wait for stable clock operation after exiting from standby mode, to active mode or sleep mode due to an interrupt. The designation should be made according to the clock frequency so that the waiting time is at least 6.5 ms. The relationship between the specified value and the number of wait states is shown in table 6.1. When an external clock is to be used, the minimum value (STS2 = STS1 = STS0 =1) is recommended.	2.0
6.1.4 Module Standby Control Register 2 (MSTCR2)	69	Deleted.	2.0
Section 7 ROM	75	Description amended. EIOT → E10T • Reprogramming capability The flash memory can be reprogrammed up to 1,000 times. Description deleted. • Power-down mode	2.0

Item	Page	Revisions (See Manual for Details)	Rev.
7.2.4 Flash Memory Enable Register (FENR)	79	Description amended. Bit 7 (FLSHE) in FENR enables or disables the CPU access to the flash memory control registers, FLMCR1, FLMCR2, and EBR1.	2.0
7.3 On-Board Programming Modes Table 7.1 Setting Programming Modes	79	Description amended. EIOT_0 → E10T_0	2.0
7.3.1 Boot Mode Table 7.2 Boot Mode Operation	81	Changed. 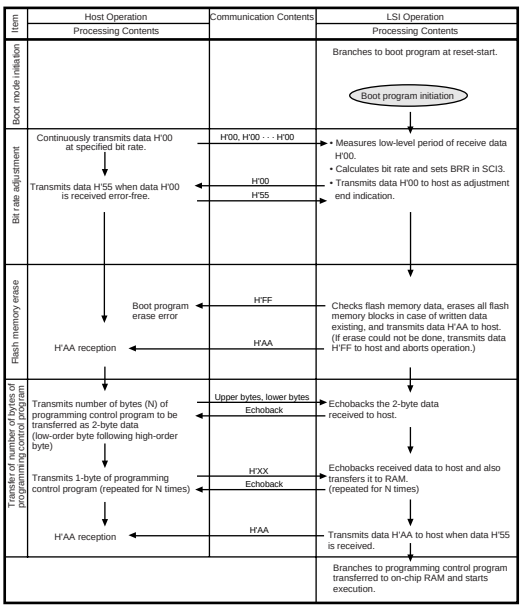	2.0
7.4.1 Program/Program-Verify	83	Description amended. 7. For a dummy write to a verify address, write 1-byte data H'FF to an address whose lower 2 bits are B'00. Verify data can be read in words or in longwords from the address to which a dummy write was performed.	2.0

Item	Page	Revisions (See Manual for Details)	Rev.
7.4.1 Program/Program-Verify Figure 7.3 Program/Program-Verify Flowchart	84	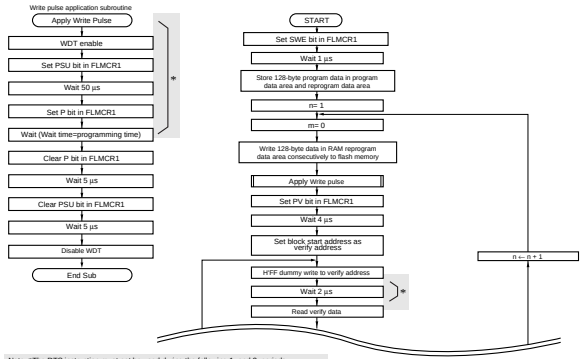	2.0
7.4.3 Interrupt Handling when Programming/Erasing Flash Memory Figure 7.4 Erase/Erase-Verify Flowchart	87	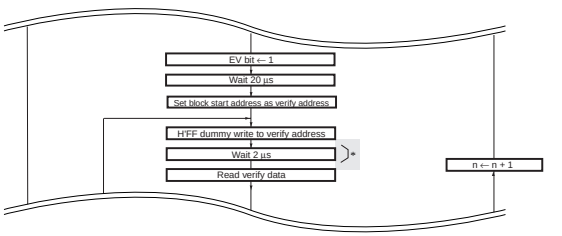	2.0
9.5.1 Port Control Register 8 (PCR8)	106	**Bit** / **Bi Name** / **Initial** / **R/W** / **Description** 7 — — — Reserved 6 — — — 5 — — —	2.0
10.3.2 Time Constant Registers A and B (TCORA, TCORB)	113	Initial value added. TCORA and TCORB are initialized to H'FF.	2.0

Item	Page	Revisions (See Manual for Details)	Rev.
10.3.5 Timer Control Register V1 (TCRV1)	117		2.0

Bit	Bit Name	Description
2	TRGE	TCNTV starts counting up by the input of the edge which is selected by TVEG1 and TVEG0. 0: Disables starting counting-up TCNTV by the input of the TRGV pin and halting counting-up TCNTV when TCNTV is cleared by a compare match. 1: Enables starting counting-up TCNTV by the input of the TRGV pin and halting counting-up TCNTV when TCNTV is cleared by a compare match.

11.3.2 Timer Control Register W (TCRW)	130	Description amended TCRW selects the timer counter clock source, selects a clearing condition, and specifies the timer output levels.	2.0

Bit	Bit Name	Initial Value	R/W	Description
3	TOD	0	R/W	Timer Output Level Setting D 0: Output value is 0* 1: Output value is 1*
2	TOC	0	R/W	Timer Output Level Setting C 0: Output value is 0* 1: Output value is 1*
1	TOB	0	R/W	Timer Output Level Setting B 0: Output value is 0* 1: Output value is 1*
0	TOA	0	R/W	Timer Output Level Setting A 0: Output value is 0* 1: Output value is 1*

Note: * The change of the setting is immediately reflected in the output value.

Item	Page	Revisions (See Manual for Details)	Rev.
11.4.1 Normal Operation Figure 11.6 Toggle Output Example (TOA = 0, TOB = 1)	137	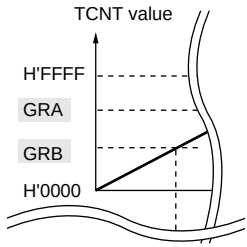	2.0
12.1 Features	151	Description amended. • Selectable from nine counter input clocks. Eight clock sources (ϕ/64, ϕ/128, ϕ/256, ϕ/512, ϕ/1024, ϕ/2048, ϕ/4096, and ϕ/8192) or the internal oscillator can be selected as the timer-counter clock. When the internal oscillator is selected, it can operate as the watchdog timer in any operating mode.	2.0
12.2.1 Timer Control/Status Register WD (TCSRWD)	152	TCSRWD performs the TCSRWD and TCWD write control. TCSRWD also controls the watchdog timer operation and indicates the operating state. TCSRWD must be rewritten by using the MOV instruction. The bit manipulation instruction cannot be used to change the setting value. **Bit** — **R/W** 7 — R/W 5 — R/W 3 — R/W 1 — R/W	2.0
13.3.4 Transmit Data Register (TDR)	158	Initial value added. TDR is initialized to H'FF.	2.0
13.3.7 Serial Status Register (SSR)	163	**Bit** — **Bit Name** — **Initial Value** — **R/W** 2 — TEND — 1 — R	2.0
15.1 When Using Internal Power Supply Step-Down Circuit	207	Description amended. Connect the external power supply to the V_{CC} pin, and connect a capacitance of approximately 0.1 µF between V_{CL} and V_{SS}, as shown in figure 15.1.	2.0
15.2 When Not Using Internal Power Supply Step-Down Circuit	208	Description amended. When the internal power supply step-down circuit is not used, connect the external power supply to the V_{CL} pin and V_{CC} pin, as shown in figure 15.2.	2.0

Item	Page	Revisions (See Manual for Details)	Rev.
17.2.6 Flash Memory Characteristics (Preliminary) Table 17.7 Flash Memory Characteristics (Preliminary)	231		2.0

Item	Symbol	Test Condition	Values Min	Typ	Max	Unit
Reprogramming count	N_{WEC}	—	—	—	1000	Times

B.1 I/O Port Block Figure B.10 Port 5 Block Diagram (P54 to P50)	267	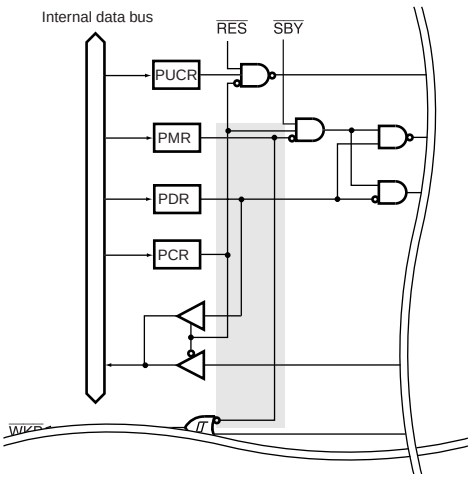	2.0

Index

A/D Converter 195
A/D conversion time 202
external trigger input 203
sample-and-hold circuit 202
Scan Mode 201
Single Mode 201
Absolute Maximum Ratings 219
Address Break 55
Addressing Modes 27
Absolute Address 28
Immediate 28
Memory Indirect 29
Program-Counter Relative 29
Register Direct 27
Register Indirect 27
Register Indirect with Displacement 28
Register Indirect with Post-Increment 28
Register Indirect with Pre-Decrement 28

Clock Pulse Generators 61
Condition Field 26
Condition-Code Register (CCR) 11
CPU 7

Effective Address 29
Effective Address Extension 26
Electrical Characteristics 219
AC Characteristics 226
DC Characteristics 221
Exception Handling 41
NMI 48
Reset Exception Handling 48
Stack Status 50
Trap Instruction 41

flash memory 75
Boot Mode 80
boot program 79
Erase/Erase-Verify 85
erasing units 75
Error Protection 88
Hardware Protection 88
Program/Program-Verify 83
programming units 75
Programming/Erasing in User Program Mode 82
Software Protection 88

General Registers 10

I/O Ports 91
I/O Port Block Diagrams 267
Instruction Set 16
Arithmetic Operations Instructions 18, 19
Bit Manipulation Instructions 21, 22
Block Data Transfer Instructions 25
Branch Instructions 23
Data Transfer Instructions 17
Logic Operations Instructions 20
Shift Instructions 20
System Control Instructions 24
Internal Power Supply Step-Down Circuit 207
Interrupt
Internal Interrupts 49
Interrupt Response Time 51
IRQ3 to IRQ0 Interrupts 48
NMI interrupt 48
WKP5 to WKP0 Interrupts 48

large current ports 1

Memory Map 8
Module Standby Function 73

On-Board Programming Modes 79
Operation Field 26

Package 1
Package Dimensions 284

Pin Arrangement 3
Power-down Modes..... 65
Sleep Mode 72
Standby Mode 72
Subsleep Mode 72
Prescaler S 63
Product Code Lineup..... 283
Program Counter (PC)..... 11
PWM Operation 140

Register
ABRKCR..... 56, 211, 214, 217
ABRKSR 57, 211, 214, 217
ADCR..... 200, 211, 214, 217
ADCSR..... 199, 211, 214, 217
ADDRA 198, 211, 214, 217
ADDRB 198, 211, 214, 217
ADDRC 198, 211, 214, 217
ADDRD 198, 211, 214, 217
BARH..... 57, 211, 214, 217
BARL 57, 211, 214, 217
BDRH..... 57, 211, 214, 217
BDRL 57, 211, 214, 217
BRR..... 164, 210, 213, 216
EBR1 ..... 78, 210, 213, 216
FENR..... 79, 210, 213, 216
FLMCR1..... 77, 210, 213, 216
FLMCR2..... 78, 210, 213, 216
GRA 135, 210, 213, 216
GRB..... 135, 210, 213, 216
GRC..... 135, 210, 213, 216
GRD 135, 210, 213, 216
IEGR1..... 43, 212, 215, 218
IEGR2..... 44, 212, 215, 218
IENR1..... 45, 212, 215, 218
IRR1 ..... 46, 212, 215, 218
IWPR..... 47, 212, 215, 218
MSTCR1..... 69, 212, 215, 218
PCR1 ..... 93, 212, 215, 217
PCR2 ..... 96, 212, 215, 217
PCR5 ..... 100, 212, 215, 217
PCR7 ..... 104, 212, 215, 217
PCR8 ..... 106, 212, 215, 217
PDR1 ..... 93, 211, 214, 217
PDR2 ..... 97, 211, 214, 217
PDR5 ..... 100, 211, 214, 217
PDR7 ..... 104, 211, 214, 217
PDR8 ..... 107, 211, 214, 217
PDRB..... 110, 212, 215, 217
PMR1..... 92, 212, 215, 217
PMR5..... 99, 212, 215, 217
PUCR1..... 94, 211, 214, 217
PUCR5..... 101, 211, 214, 217
RDR..... 158, 211, 214, 216
RSR 158
SCR3..... 160, 210, 213, 216
SMR..... 159, 210, 213, 216
SSR..... 162, 211, 214, 216
SYSCR1..... 66, 212, 215, 218
SYSCR2..... 68, 212, 215, 218
TCNT..... 135, 210, 213, 216
TCNTV..... 113, 210, 213, 216
TCORA..... 113, 210, 213, 216
TCORB..... 113, 210, 213, 216
TCRV0..... 114, 210, 213, 216
TCRV1..... 117, 210, 213, 216
TCRW..... 129, 210, 213, 216
TCSRV 116, 210, 213, 216
TCSRWD..... 152, 211, 214, 217
TCWD 153, 211, 214, 217
TDR..... 158, 211, 213, 216
TIERW..... 131, 210, 213, 216
TIOR0..... 133, 210, 213, 216
TIOR1..... 134, 210, 213, 216
TMRW..... 129, 210, 213, 216
TMWD..... 153, 211, 214, 217
TSR..... 158
TSRW 131, 210, 213, 216
Register Field..... 26

Serial Communication Interface 3(SCI3) 155
Asynchronous Mode..... 169
bit rate..... 164
Break Detection..... 192
Clocked Synchronous Mode 177
framing error 173

Mark State 192
Multiprocessor Communication Function 184
overrun error 173
parity error 173
Stack Pointer (SP) 11
System Clock Generator 61
Timer V 111
Timer W 125

Vector Address 42

Watchdog Timer 151

H8/3672 Series Hardware Manual

Publication Date: 1st Edition, March 2001
2nd Edition, March 2002
Published by: Business Planning Division
Semiconductor & Integrated Circuits
Hitachi, Ltd.
Edited by: Technical Documentation Group
Hitachi Kodaira Semiconductor Co., Ltd.
Copyright © Hitachi, Ltd., 2001. All rights reserved. Printed in Japan.