AN4427
Application note

Gasket design for optimal acoustic performance in MEMS microphones

Introduction

This application note serves as a reference for the design of gaskets in MEMS microphones, providing recommendations and best practices in order to achieve optimal acoustic performance of these devices.

Contents

1 Acoustic gasket and sealing guidelines 5

1.1 Best practices for sealing MEMS microphones in consumer applications . 5

1.2 Acoustic theory 5

1.3 Gasket design recommendations 7

Appendix A Bibliography 17

2 Revision history 18

List of figures

Figure 1. Application example 5
Figure 2. MP34DT01 X-ray 7
Figure 3. MEMS microphone cavity to be simulated 8
Figure 4. MP34DT01 frequency response 8
Figure 5. MP34DT01 frequency response vs. tube length 9
Figure 6. MP34DT01 frequency response vs. tube radius 9
Figure 7. Simulated complex geometries 10
Figure 8. MP34DT01 frequency response vs. complex geometry 11
Figure 9. Subdomain materials 13
Figure 10. Resonance peak magnitude vs. materials 14
Figure 11. Example of tablet - design and acoustic cavity 15
Figure 12. Frequency response 15

List of tables

Table 1. Resonance peak vs. tube length 9
Table 2. Resonance peak vs. tube radius 10
Table 3. Resonance peak vs. geometry 12
Table 4. Acoustic properties of materials 13
Table 5. Resonance peak magnitude vs. materials 14
Table 6. Document revision history 18

1 Acoustic gasket and sealing guidelines

1.1 Best practices for sealing MEMS microphones in consumer applications

MEMS microphones, owing to their form factor, are suitable components for many consumer products such as laptops, smartphones, tablets and portable devices in general. Consumer devices have progressively become very small and thin and the sound inlet of the microphone is not placed in direct interface with the environment. As a matter of fact, the devices hosting the microphone commonly have a plastic cover. This mechanical construction requires interposing, between the cover of the device and the sound inlet, a gasket which serves to guide the sound wave. Additionally, if the microphone is a bottom port, the PCB width also increments the acoustic path between the sound source and the microphone sound inlet. The picture below shows an example of a gasket used in a tablet.

Figure 1. Application example

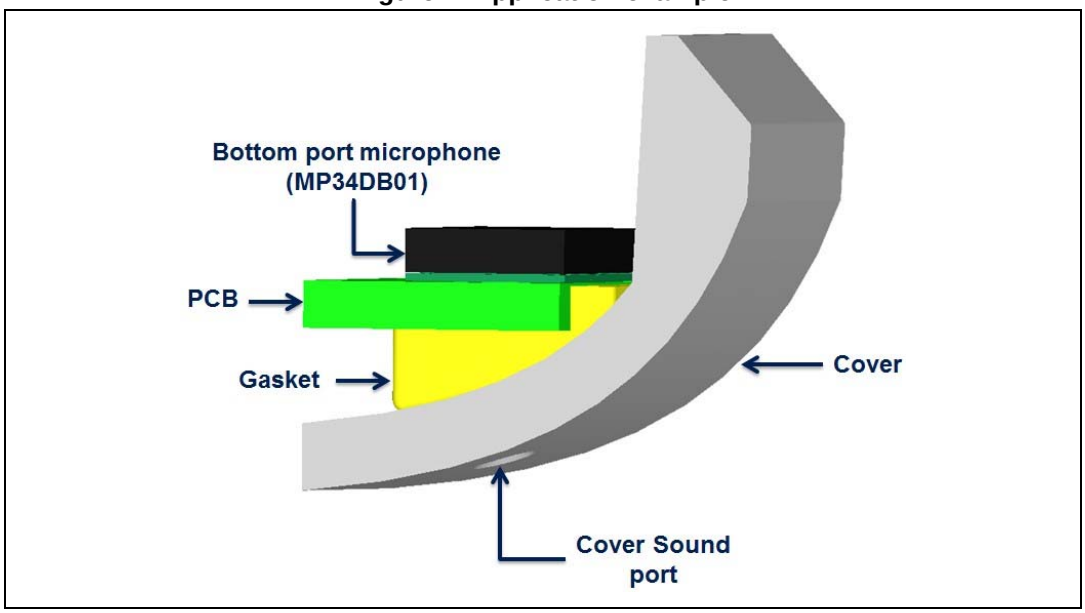

Basically the acoustic cavity created by the components involved (cover, gasket and the PCB, if bottom-port package) modifies the frequency response of the microphone. The equations regulating the behavior of a stationary wave inside an acoustic cavity are complex and depend on the geometry of the volumes involved such as the hole in the cover, the hole produced in the gasket and, for bottom-port configurations only, the diameter of the PCB via. Additionally, the behavior of the entire frequency response depends also on the material of these components. For these reasons, ST provides a simulation of the frequency response behavior using the professional tool COMSOL®. The following sections describe experiments using this tool to determine basic guidelines for designing a proper gasket.

1.2 Acoustic theory

In microphone applications, a gasket placed on top of the sound inlet works a resonator. An acoustic resonator works in the following manner: when air is forced into a cavity, the pressure inside increases; when the external force pushing the air into the cavity is

removed, the higher-pressure air inside will flow out. The cavity will be left at a pressure slightly lower than the outside, causing air to be drawn back in. This process repeats with the magnitude of the pressure changes decreasing each time. The air in the port (the neck of the chamber) has mass. Since it is in motion, it possesses some momentum. A longer port would make for a larger mass, and vice-versa. The diameter of the port is related to the mass of air and the volume of the chamber. A port that is too small in area for the chamber volume will "choke" the flow while one that is too large in area for the chamber volume tends to reduce the momentum of the air in the port.

Helmholtz resonance is the phenomenon of air resonance in a cavity, such as when one blows across the top of an empty bottle. The name comes from a device created in the 1850s by Hermann Von Helmholtz, the "Helmholtz resonator", which he, the author of the classic study of acoustic science, used to identify the various frequencies or musical pitches present in music and other complex sounds. If the volume of the MEMS cavity is greater than the neck, the resonator corresponds exactly to a Helmholtz resonator. More commonly this condition is not respected since the volume of the MEMS cavity is smaller than the entire volume created by the gasket cavity. Hence, since the equations regulating the behavior of a stationary wave inside an acoustic cavity are complex and depend on the geometry of every involved acoustic cavity, the use of a simulating tool like COMSOL® is mandatory.

The COMSOL® tool supports the five standard problems or scenarios that occur frequently when analyzing acoustics:

1. The radiation problem: a vibrating structure (a speaker, for example) radiates sound into the surrounding space. A far-away boundary condition is necessary to model the unbounded domain.
2. The scattering problem: an incident wave impinges on a body and creates a scattered wave. A far-away radiation boundary condition is necessary.
3. The sound field in an interior space (such as a room): the acoustic waves stay in a finite volume so no radiation condition is necessary.
4. Coupled fluid-elastic structure interaction (structural acoustics). If the radiating or scattering structure consists of an elastic material, then one must consider the interaction between the body and the surrounding fluid. In multiphysics coupling, the acoustic analysis provides a load (the sound pressure) to the structural analysis, and the structural analysis provides accelerations to the acoustic analysis.
5. The transmission problem: the incident sound wave propagates into a body, which can have different acoustic properties. Pressure and acceleration are continuous on the boundary.

In the case of a microphone, the scenario considered is the sound field in an interior space. Additionally the tool allows setting the boundary condition for every surface in order to define the problem to simulate.

Typical boundary conditions are:

- Sound-hard boundaries. A sound-hard boundary is a boundary at which the normal component of the acceleration is zero. This means that the normal derivative of the pressure is zero at the boundary. This condition will be used to understand the dependency of the sound-soft boundaries.
- Sound-soft boundaries. This means that the differential pressure vanishes at the boundary.
- Impedance boundary conditions. The impedance boundary condition is a generalization of the sound-hard and sound-soft boundary conditions. From a physical point of view, the

acoustic input impedance is the ratio between pressure and normal particle velocity. The impedance boundary condition is a good approximation for a locally reacting surface defined as a surface for which the normal velocity at any point depends only on the pressure at that exact point.

- Radiation boundary conditions. The radiation boundary conditions allow an outgoing wave to leave the modeling domain with minimal reflections. This condition will never be used when simulating microphones.

1.3 Gasket design recommendations

ST provides simulations for customer-specific projects. This section provides gasket design recommendations based on experience.

In order to determine the best practices for gasket design, experiments were performed using the COMSOL® tool. The method consists of simulating the effect of defined geometries placed close to the sound inlet of the microphone. These simulations have been carried out, checking how such geometries can modify the frequency response of the ST top-port microphone MP34DT01. The low frequency behavior depends on the ventilation hole and the back chamber while the high frequency response depends on the geometry of the front chamber only. Basically the addition of a gasket modifies the whole geometry of the front chamber since the MP34DT01 has the MEMS close to the sound inlet. For this reason, the geometry of the package is not considered in the following simulations and the range of the study starts from 100 Hz up to 50 kHz.

Figure 2. MP34DT01 X-ray

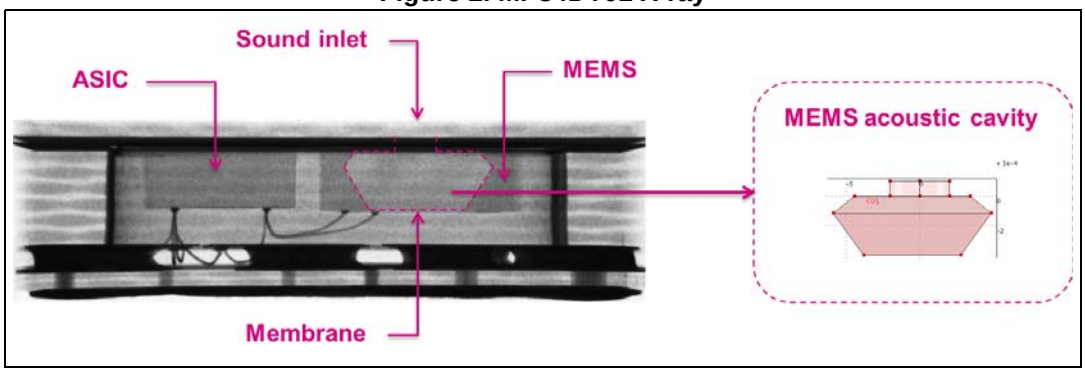

The first simulation performed with the COMSOL® tool represents the frequency response of the MP34DT01, applying 1 Pascal at the sound inlet and setting the silicon material properties as impedance boundary conditions. The tool solves the acoustic equations for every discrete point of the geometry and at the end of the simulation it is possible to plot the collected data in a relevant point. The evaluation point for the frequency response is one of the 4 corners of the MEMS membrane.

Figure 3. MEMS microphone cavity to be simulated

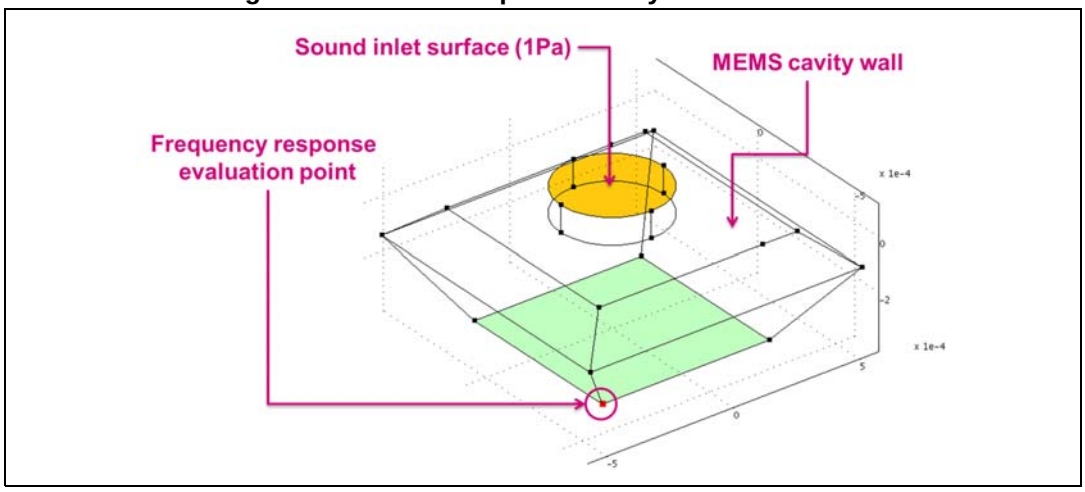

According to the results of the simulation, represented in the figure below, the response of the MP34DT01 microphone can be considered flat across the entire audio band and has small increases after 20 kHz. Despite this increment, the assumption that the frequency response of a geometry including microphone and gasket solely depends on the addition of a gasket is a good approximation.

Figure 4. MP34DT01 frequency response

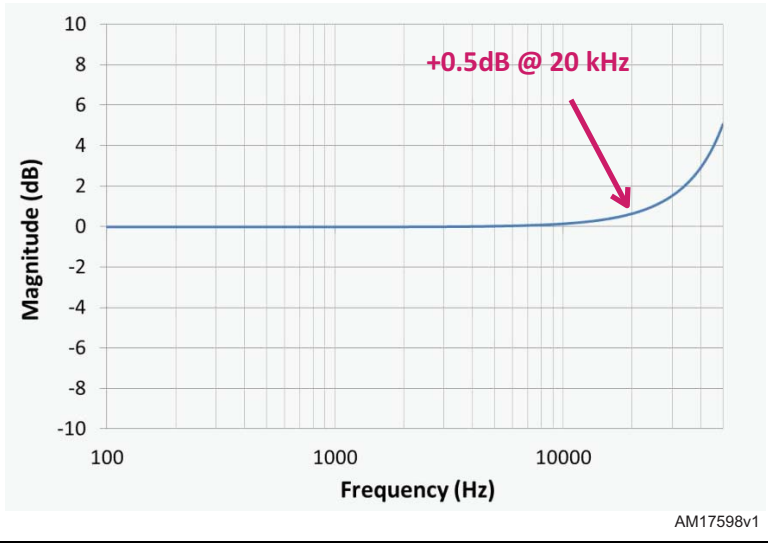

The first experiment consists of a simulation using cylindrical tubes with fixed radius (200 µm) and different lengths. On the other hand, the second experiment consists of a simulation using cylindrical tubes with fixed length (2 mm) but different diameters. From the results of these two experiments, it is possible to determine the effect of a gasket depending on its length and width. In the following simulations the boundary conditions of the gasket, as well as the microphone cavity, surfaces have been set to sound-hard boundaries. Under this condition the simulation will show the effect of the geometry only and neglects the effect of the involved materials.

Figure 5. MP34DT01 frequency response vs. tube length

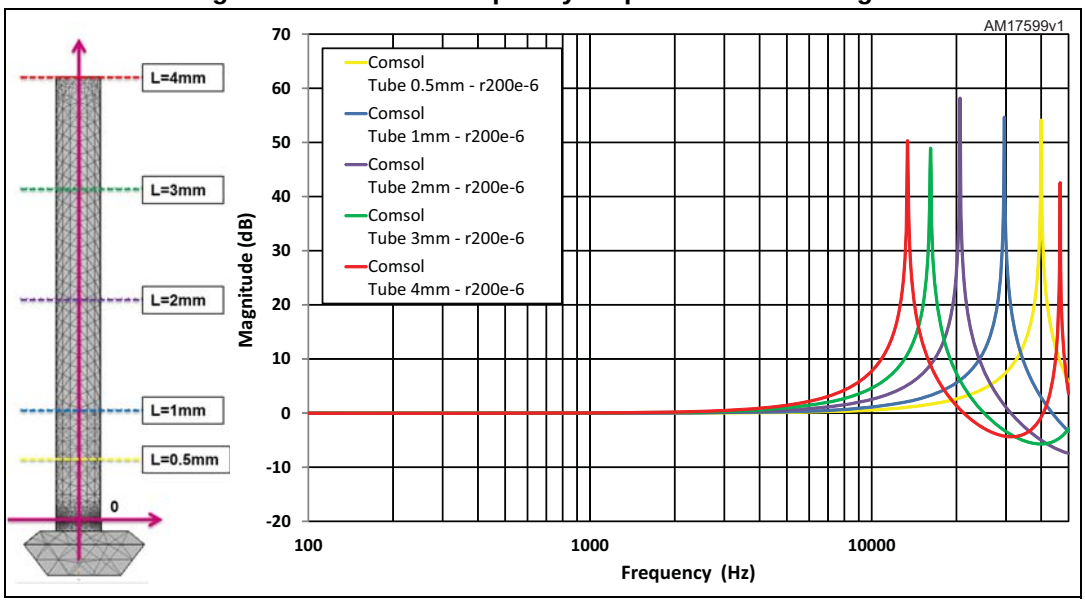

Table 1. Resonance peak vs. tube length

Tube length (mm)	Resonance frequency (Hz)
0.5	39900
1	29600
2	20600
3	16200
4	13400

The figure below represents the frequency response versus the radius of the tube.

Figure 6. MP34DT01 frequency response vs. tube radius

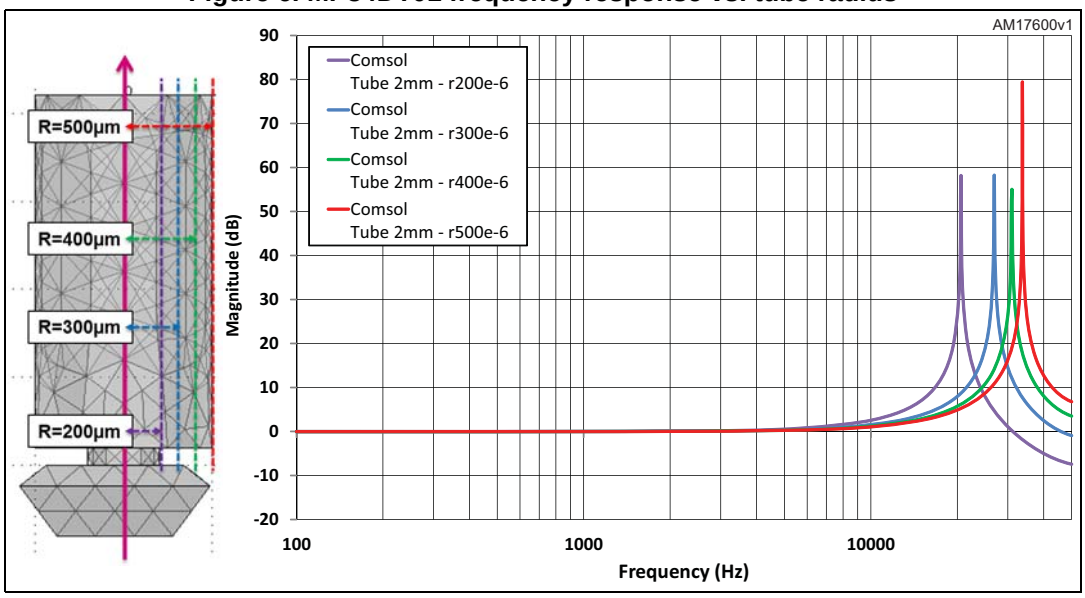

Table 2. Resonance peak vs. tube radius

Tube radius (µm)	Resonance frequency (Hz)
2.00E-04	20600
3.00E-04	26900
4.00E-04	31000
5.00E-04	33700

Starting from these preliminary results, it is possible to state that geometry placed on top of the microphone cavity produces a resonance effect. The above results can be summarized in two basics conclusions:

1. Firstly the resonance frequency moves lower and higher in the frequency domain, respectively increasing or decreasing the length of the gasket.
2. Conversely, the resonance frequency moves lower and higher in the frequency domain, respectively decreasing or increasing the radius of the gasket.

Hence, if the gasket designer want to keep the frequency response flat as much as possible, the first recommendation is to keep the gasket short and wide.

The following simulations are aimed to further investigate the dependence of the resonance frequency, increasing the complexity of the geometry. The figures below represent the simulated geometries and the respective results.

Figure 7. Simulated complex geometries

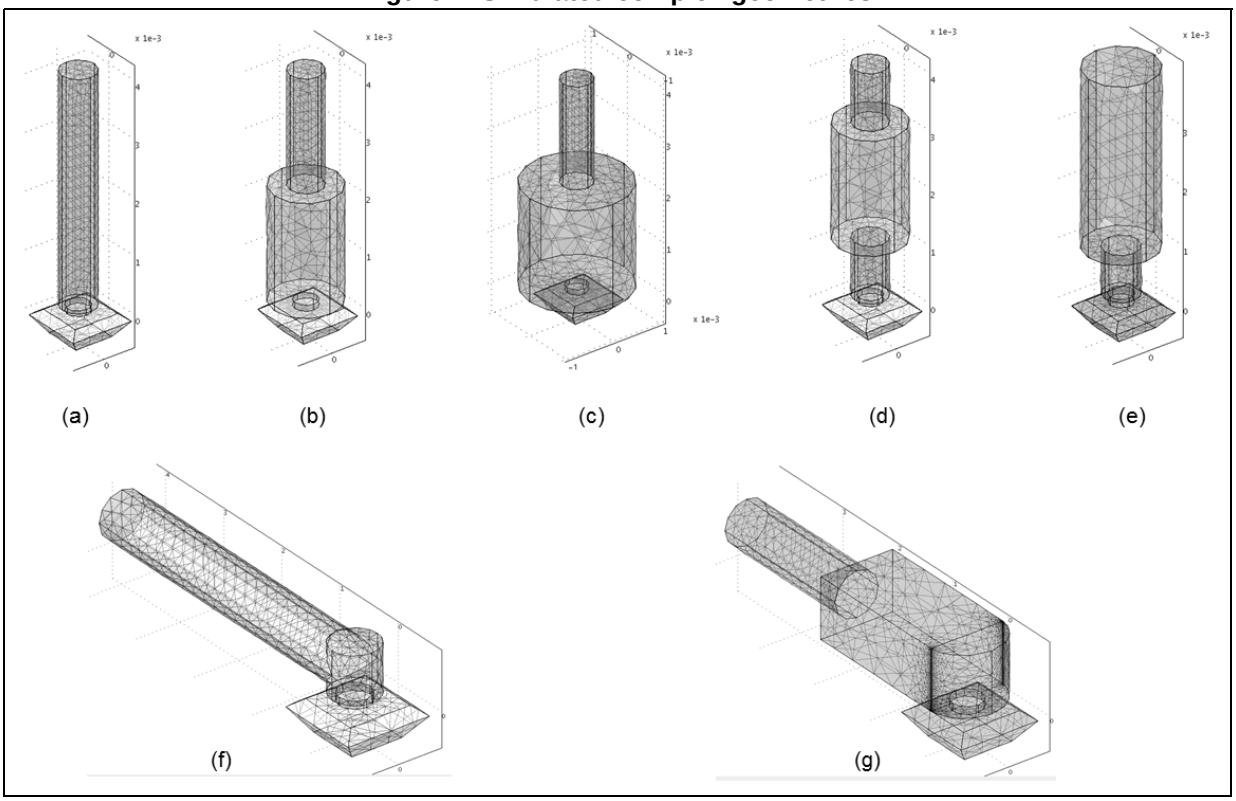

Figure 8. MP34DT01 frequency response vs. complex geometry

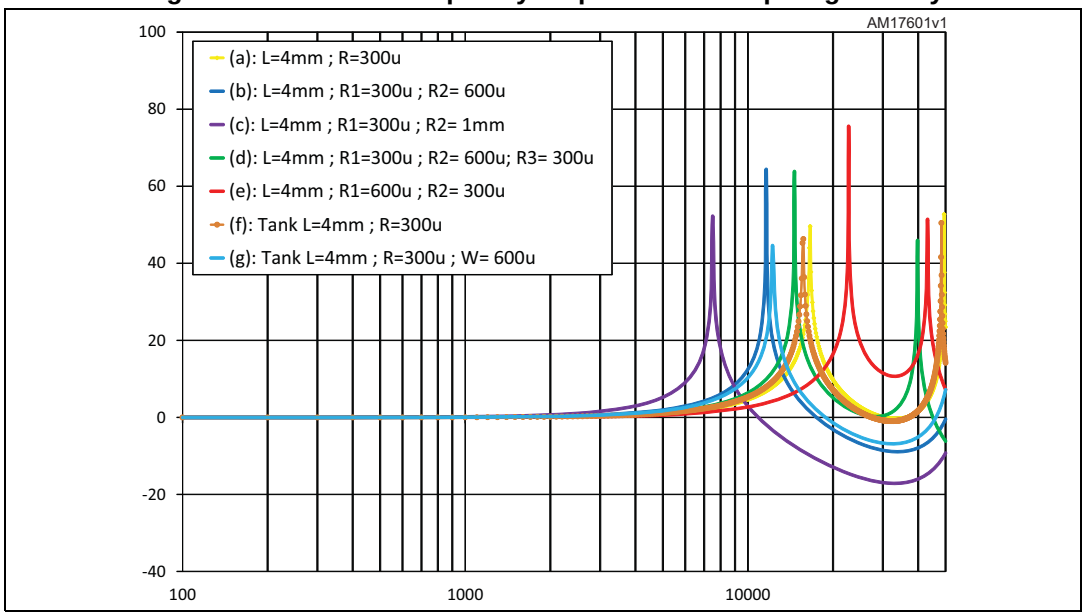

Basically the goal of the above simulations is to understand the effect of the addition of different volumes in terms of radius and length with respect to a fixed geometry. The first simulation is a simple geometry, *Figure 7* (a), while the next geometries [*Figure 7* (b), (c), (d), (e)] increase the complexity of the previous one, adding different radius and length volumes. For example, the second geometry includes a volume with a doubled radius close to the microphone sound inlet, the third one reaches a radius of 1 mm, the fourth geometry interposes a doubled radius volume at the middle of the original tube and the last one increases the entire volume except a 1 mm length section close to the microphone sound inlet. The geometries of the *Figure 7* (f) and (g) are a little bit different. The purpose of the last two simulations is to check if the resonance frequency depends on the inclination of the tube or not.

The simulations done, the observations given below are helpful to understand how the resonance frequency of a simple geometry moves in the frequency domain due to the addition of different volumes. The next consideration must be read as a comparison with respect to the first geometry. Checking the results of the simulations in *Figure 8*, the following observations can be asserted:

1. The introduction of a bigger volume geometry, in the side close to the sound inlet, forces the resonance peak to lower frequencies (*Figure 7* (b), blue trace in *Figure 8*)
2. The resonance peak moves to a lower frequency in proportion to the increase of the diameter of the geometry close to the sound inlet (*Figure 7* (c), violet trace in *Figure 8*)
3. The resonance peak moves to higher frequencies when the bigger geometry moves away from the sound inlet of the microphone. (*Figure 7* (d) (e), green and red traces in *Figure 8*)
4. The resonance peak depends on the geometry, length and width, only. The peak position is independent of geometry inclination. The geometry in *Figure 7* (f) represents the same structure of the *Figure 7* (a) but rotated 90 degrees, the two respective simulation results are almost the same (yellow and orange traces in *Figure 8*).

The last simulation, geometry represented in *Figure 7* (g), has been performed to double check the previous statement. The geometry is similar to that of *Figure 7* (b) and the simulation results are almost the same (blue and cyan traces in *Figure 8*)

These simulated geometries are helpful when the gasket designer must introduce different volumes. This constraint can occur when the whole application forces the placement of the microphone far from the chassis or perpendicular to the chassis. The following table summarizes the resonances frequency position according to the simulated geometries.

Table 3. Resonance peak vs. geometry

Geometry	Resonance frequency (Hz)
(a): L = 4 mm; R = 300 µ	16600
(b): L = 4 mm; R1 = 300 µ; R2 = 600 µ	11600
(c): L = 4 mm; R1 = 300 µ; R2 = 1 mm	7500
(d): L = 4 mm; R1 = 300 µ; R2= 600 µ; R3 = 300 µ	14600
(e): L = 4 mm; R1 = 600 µ; R2 = 300 µ	22700
(f): Tank L = 4 mm; R = 300 µ	15600
(g): Tank L = 4 mm; R = 300 µ; W = 600 µ	12200

The simulations performed so far have been focused on the contribution of the geometry on the microphone frequency response. There is another important parameter to be introduced to provide a proper analysis of the gaskets: the acoustic impedance of the involved material. Basically, while the position of resonance frequency depends on the geometry of the whole structure, the magnitude of the resonance peak depends on the acoustic impedance of the materials. The COMSOL® tool allows setting, as boundary conditions, the material properties of each surface involved in the simulation. The goal of the following simulations is to determine the relationship between the resonance peak magnitudes with respect to the acoustic properties of the material. This target will be achieved by setting impedance boundary conditions[(a)] instead of sound-hard boundaries in the tool. For each surface the proper acoustic impedance of the material will be set. The simulations will be performed, firstly setting the pressure at the structure sound inlet opening (1Pa), setting the acoustic impedance of the MEMS membrane (120*150) and setting the silicon cavity impedance (2000*1500). The above parameters are common to the entire real situation while the gasket surfaces acoustic impedance can vary according to the designer's preference. As a matter of fact, the gasket can consist of plastic, rubber or other materials. Additionally the cover can be made of aluminum or iron or plastic as well.

Referring to the following figure, the yellow, pink and green surfaces will be set and kept fixed according to their real acoustic impedance while the blue surface will be modified according to the properties of the different materials.

a. The acoustic impedance is defined as the product of the density of the material and the speed of sound in that material: Z_{acu} = p x c.

Figure 9. Subdomain materials

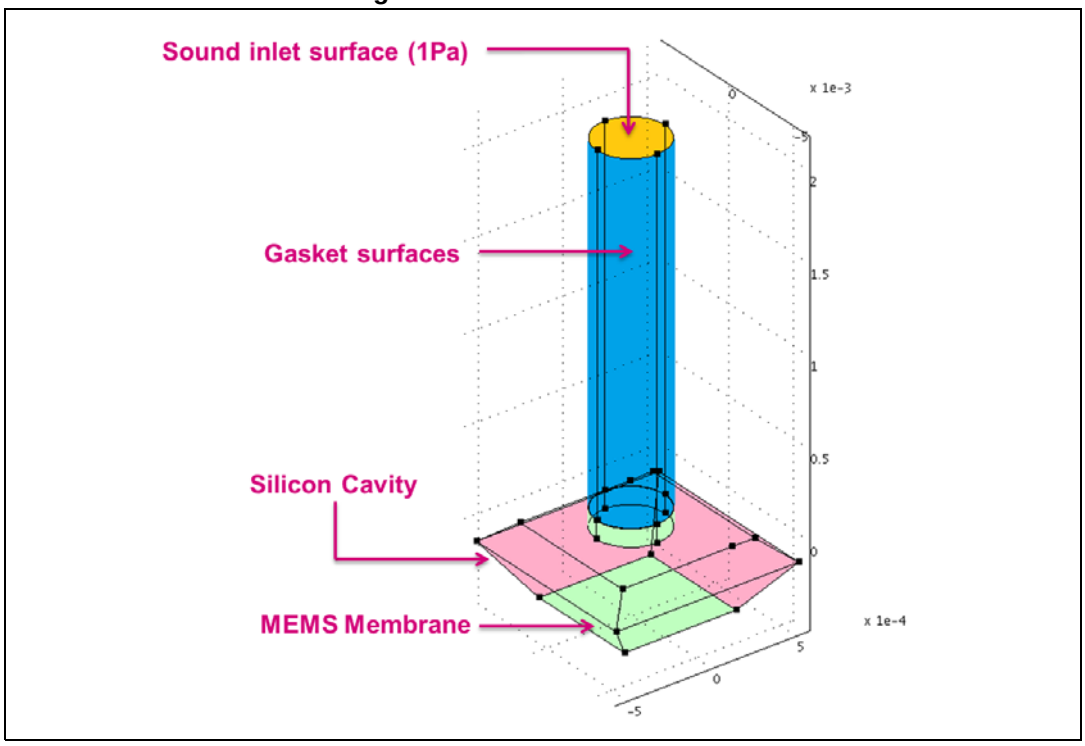

The following table summarizes the acoustic properties of the most common materials used by manufacturers of electronics: plastic or aluminum concerning the covers; soft and hard rubber concerning the gasket; silicon and PCB concerning the electronic components.

Table 4. Acoustic properties of materials

Material	Density (kg / m^3)	Sound velocity in material (m/s)
Air	1.2	343
Aluminum	2700	6400
PCB	1850	2740
Glass	2400	4000
Silicon	2000	1500
Hard rubber	1520	150
Soft rubber	200	150
Plastic	1200	2500
Lead	11340	1150
Iron	7870	5000
MEMS membrane	120	150

The following graphic depicts the behavior of the magnitude of the resonance peak, keeping silicon and MEMS membrane materials fixed and changing the material of the gasket only. While the geometry of the entire application behaves as a resonator, the acoustic property of the material works as a damping factor. The peak is attenuated in proportion to the softness of the material used as the gasket. The gasket designer can choose the material of the gasket according to his own needs. Where the frequency response must be kept flat as much as possible, the materials involved must be chosen as supple as possible.

Figure 10. Resonance peak magnitude vs. materials

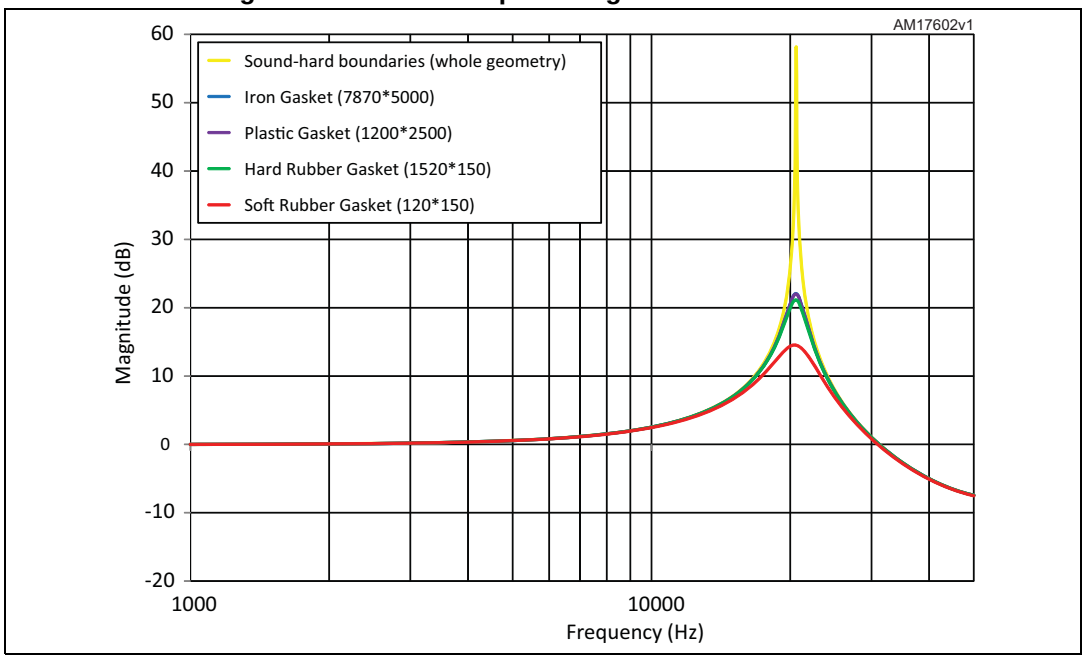

The next table summarizes the results of the simulations.

Table 5. Resonance peak magnitude vs. materials

MEMS cavity	MEMS membrane	Gasket material	Resonance peak (dB)
Silicon	Membrane	Sound-hard boundary	58.153088
Silicon	Membrane	Iron gasket	22.064283
Silicon	Membrane	Plastic gasket	21.99249
Silicon	Membrane	Hard rubber gasket	21.136204
Silicon	Membrane	Soft rubber gasket	14.517481

The following simulation is an example of a real case study of the frequency response of a bottom-port microphone. In particular, the following figure illustrates a possible structure of a tablet concerning the microphone section. In this example the bottom-port microphone is mounted on the PCB, a soft rubber gasket has been used to allow the acoustic coupling between the microphone sound inlet and the cover.

Figure 11. Example of tablet - design and acoustic cavity

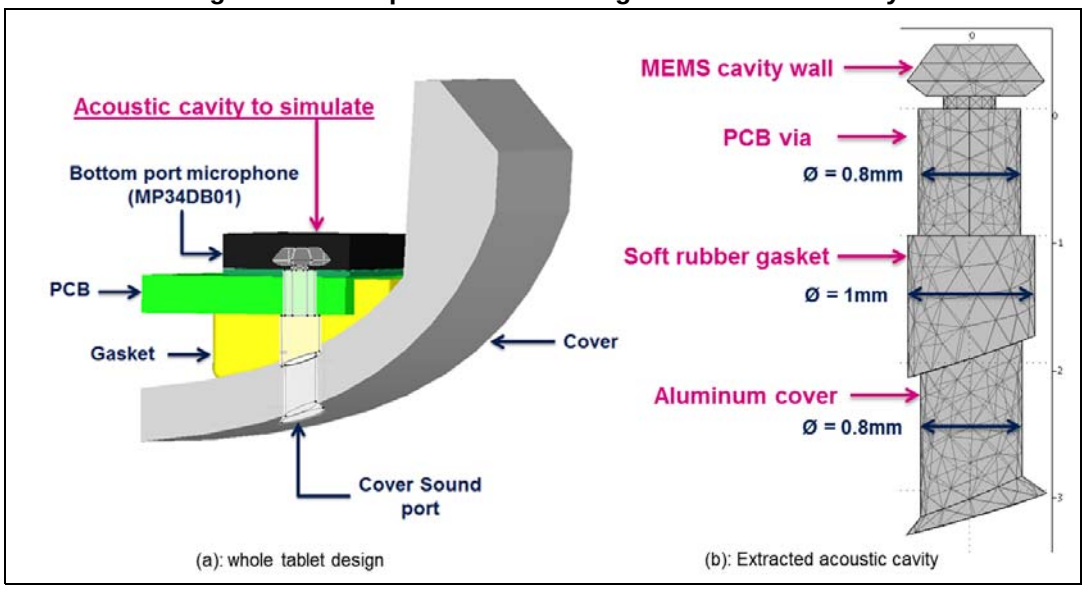

As previously stated, the acoustic simulation is performed on the geometry of the all of the components involved. *Figure 11* (b) represents the acoustic cavity to be simulated, extracted from the entire structure depicted in *Figure 11* (a). On the other hand, the acoustic properties of the materials must be set in the simulator to provide proper simulation results. The materials included in this simulation are those commonly adopted by the manufacturer of the electronic device; the printed circuit consists of FR4, the gasket is soft rubber and the cover is made of aluminum.

The COMSOL® tool has been used to study the effect of this geometry as well as the materials and the result is shown in the following figure.

Figure 12. Frequency response

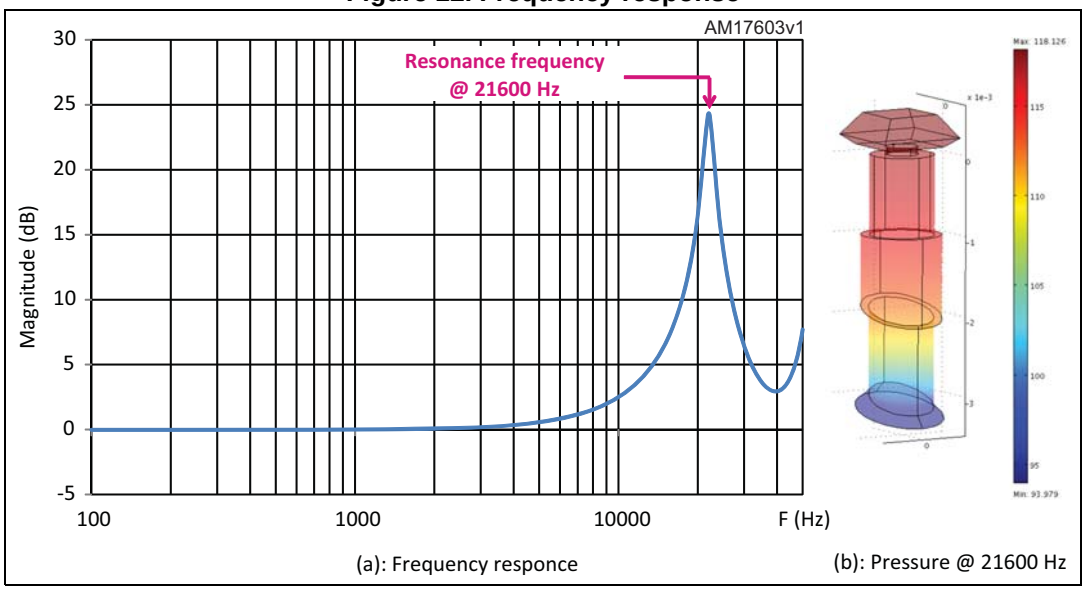

Figure 12 (a) shows the frequency response characterized by a resonance peak around 21600 Hz; *Figure 12* (b) shows how the magnitude of the pressure, expressed in dBSPL, is distributed inside the cavity. The pressure inside the cavity is plotted at the resonance frequency; this is the reason why the maximum is exactly on the MEMS membrane.

This is a typical example of how the gasket can affect the frequency response of the microphone when is embedded in the final application. The gasket commonly introduces a resonance peak; its position as well as its intensity depends on the design chosen by the user. Where the final application must be characterized by a flat frequency response, the gasket is a critical topic and it must be designed very carefully, but an equalized frequency response is needed. For example, the gasket can be helpful if an audio band range must be enhanced without using any equalization tool either analog or digital. In other words, a gasket can be a powerful factor in cases where the audio band must be equalized.

Appendix A Bibliography

1. COMSOL user guide version 3.5a
2. COMSOL modeling guide version 3.5a
3. COMSOL Introduction to Acoustics Module
4. Helmholtz resonance - Wikipedia, the free encyclopedia

2 Revision history

Table 6. Document revision history

Date	Revision	Changes
09-Jan-2014	1	Initial release

Please Read Carefully:

Information in this document is provided solely in connection with ST products. STMicroelectronics NV and its subsidiaries (“ST”) reserve the right to make changes, corrections, modifications or improvements, to this document, and the products and services described herein at any time, without notice.

All ST products are sold pursuant to ST’s terms and conditions of sale.

Purchasers are solely responsible for the choice, selection and use of the ST products and services described herein, and ST assumes no liability whatsoever relating to the choice, selection or use of the ST products and services described herein.

No license, express or implied, by estoppel or otherwise, to any intellectual property rights is granted under this document. If any part of this document refers to any third party products or services it shall not be deemed a license grant by ST for the use of such third party products or services, or any intellectual property contained therein or considered as a warranty covering the use in any manner whatsoever of such third party products or services or any intellectual property contained therein.

UNLESS OTHERWISE SET FORTH IN ST’S TERMS AND CONDITIONS OF SALE ST DISCLAIMS ANY EXPRESS OR IMPLIED WARRANTY WITH RESPECT TO THE USE AND/OR SALE OF ST PRODUCTS INCLUDING WITHOUT LIMITATION IMPLIED WARRANTIES OF MERCHANTABILITY, FITNESS FOR A PARTICULAR PURPOSE (AND THEIR EQUIVALENTS UNDER THE LAWS OF ANY JURISDICTION), OR INFRINGEMENT OF ANY PATENT, COPYRIGHT OR OTHER INTELLECTUAL PROPERTY RIGHT.

ST PRODUCTS ARE NOT DESIGNED OR AUTHORIZED FOR USE IN: (A) SAFETY CRITICAL APPLICATIONS SUCH AS LIFE SUPPORTING, ACTIVE IMPLANTED DEVICES OR SYSTEMS WITH PRODUCT FUNCTIONAL SAFETY REQUIREMENTS; (B) AERONAUTIC APPLICATIONS; (C) AUTOMOTIVE APPLICATIONS OR ENVIRONMENTS, AND/OR (D) AEROSPACE APPLICATIONS OR ENVIRONMENTS. WHERE ST PRODUCTS ARE NOT DESIGNED FOR SUCH USE, THE PURCHASER SHALL USE PRODUCTS AT PURCHASER’S SOLE RISK, EVEN IF ST HAS BEEN INFORMED IN WRITING OF SUCH USAGE, UNLESS A PRODUCT IS EXPRESSLY DESIGNATED BY ST AS BEING INTENDED FOR “AUTOMOTIVE, AUTOMOTIVE SAFETY OR MEDICAL” INDUSTRY DOMAINS ACCORDING TO ST PRODUCT DESIGN SPECIFICATIONS. PRODUCTS FORMALLY ESCC, QML OR JAN QUALIFIED ARE DEEMED SUITABLE FOR USE IN AEROSPACE BY THE CORRESPONDING GOVERNMENTAL AGENCY.

Resale of ST products with provisions different from the statements and/or technical features set forth in this document shall immediately void any warranty granted by ST for the ST product or service described herein and shall not create or extend in any manner whatsoever, any liability of ST.

ST and the ST logo are trademarks or registered trademarks of ST in various countries.
Information in this document supersedes and replaces all information previously supplied.
The ST logo is a registered trademark of STMicroelectronics. All other names are the property of their respective owners.

© 2014 STMicroelectronics - All rights reserved

STMicroelectronics group of companies

Australia - Belgium - Brazil - Canada - China - Czech Republic - Finland - France - Germany - Hong Kong - India - Israel - Italy - Japan - Malaysia - Malta - Morocco - Philippines - Singapore - Spain - Sweden - Switzerland - United Kingdom - United States of America

www.st.com