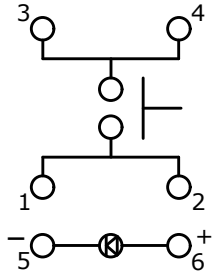

▲ CIRCUIT: SPST

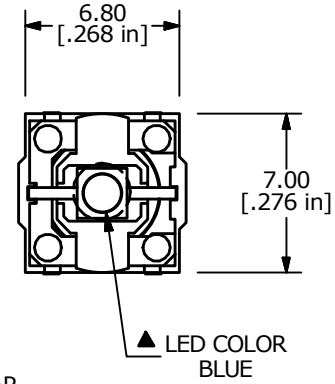

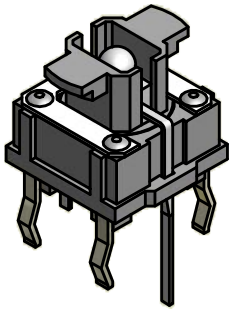

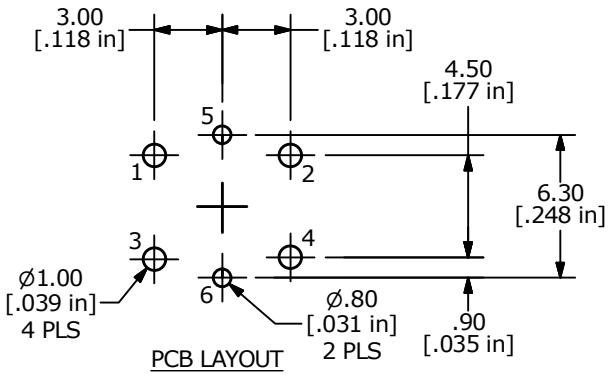

PCB LAYOUT

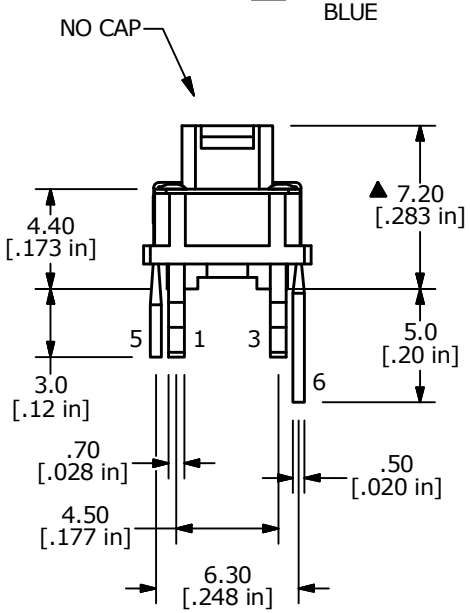

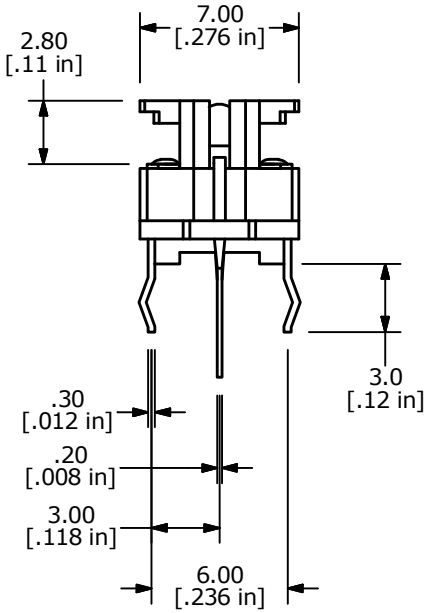

NOTES:
1. ALL DIMENSIONS IN MM
2. GENERAL TOLERANCE: X.X = ±0.4
   X.XX = ±0.25
3. RATING: 50mA, 12VDC
▲ 4. TRAVEL: 0.2 ±0.1
5. OPERATING FORCE: 160±50gf
6. CONTACT RESISTANCE: 100m-Ohms MAX
7. CONTACT MATERIAL: SILVER
8. OPERATING LIFE: 500,000 CYCLES
9. INSULATION RESISTANCE: 100M-Ohms MIN
10. DIELECTRIC STRENGTH: 500VDC FOR 1 MINUTE
▲ 11. LED COLOR: BLUE
12. OPERATING TEMPERATURE: -40°C to 85°C
13. 2002/95/EC (ROHS) COMPLIANT
14. ▲ DENOTES CRITICAL PARAMETER

▲ LED SPECS	UNITS	BLUE LED
FORWARD CURRENT	mA	5
FORWARD VOLTAGE	V	2.9 TYP. - 4.0 MAX
LUMINOUS INTENSITY	mcd	150 TYP.

REV	PCR NO	DESCRIPTION	DATE	BY
A	22217	Release for Production	3/29/16	MW

THE INFORMATION CONTAINED IN THIS DOCUMENT IS PROPRIETARY TO E-SWITCH AND IS NOT TO BE COPIED OR TRANSFERRED

E-SWITCH®

TITLE TL1265BQN

SCALE	DATE	DR	DWG	REV
3:1	3/24/2016	MW	B200040	A