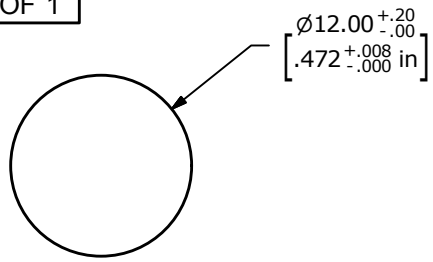

RECOMMENDED
PANEL CUT-OUT
1-6mm THICKNESS

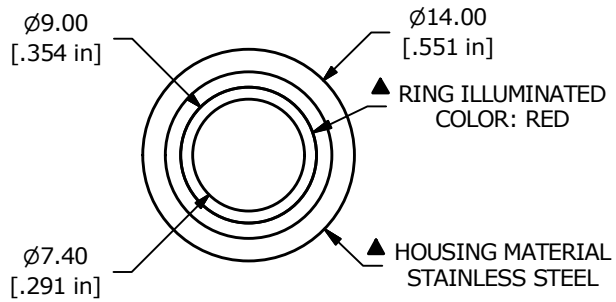

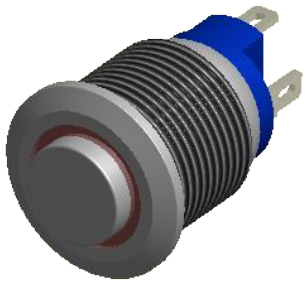

▲

SWITCH FUNCTION	
POS. 1	POS. 2
OFF	(ON)
OPEN	1-2

(ON) = MOMENTARY

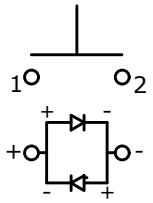

CIRCUIT: SPST

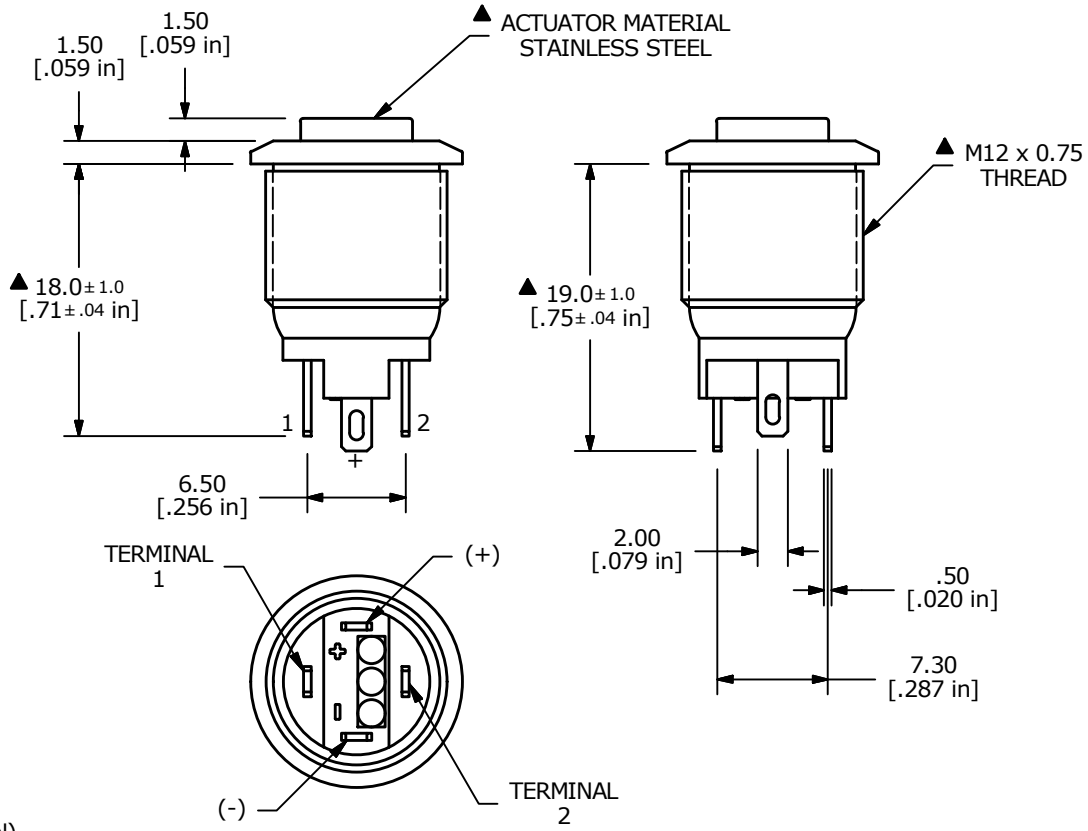

NOTE:
1. ALL DIMENSIONS IN MM [INCH]
2. GENERAL TOLERANCE: X.X = ± 0.4
   X.XX = ± 0.25
3. TERMINAL NOS. FOR REF. ONLY
4. RATING: 2A @ 36VDC
5. CONTACT RESISTANCE: 50mΩ MAX. @ 1A 12VDC
6. INSULATION RESISTANCE: 1,000MΩ @ 500VDC
7. DIELECTRIC STRENGTH: 2,000VAC MIN. FOR 1 MINUTE
8. ELECTRICAL LIFE: 200,000 CYCLES
9. CONTACT MATERIAL: SILVER
10. OPERATING TEMPERATURE: -20°C TO 55°C
11. INGRESS PROTECTION: IP65
12. ▲ LED VOLTAGE: BASE VOLTAGE 1.8V TYP.
13. ▲ DENOTES CRITICAL PARAMETER
14. 2011/65/EU (ROHS) COMPLIANT
15. HARDWARE INCLUDED: HEX NUT AND O-RING (NOT SHOWN)

REV	PCR NO	DESCRIPTION	DATE	BY
D	23192	UPDATED THREAD FROM ..0.5 TO ..0.75	1/29/18	MJR
C	22865	UPDATED RATING TO 2A @ 36VDC	5/26/17	MJR

THE INFORMATION CONTAINED IN THIS DOCUMENT IS PROPRIETARY TO E-SWITCH AND IS NOT TO BE COPIED OR TRANSFERRED

E-SWITCH®

TITLE PV0H240SS-311

SCALE	DATE	DR	DWG	REV
2:1	2/18/2016	rc	52-PV0H240SS311	D