[illegible] part [illegible]
[illegible] to insu
proper Certi-Crimp adjustment

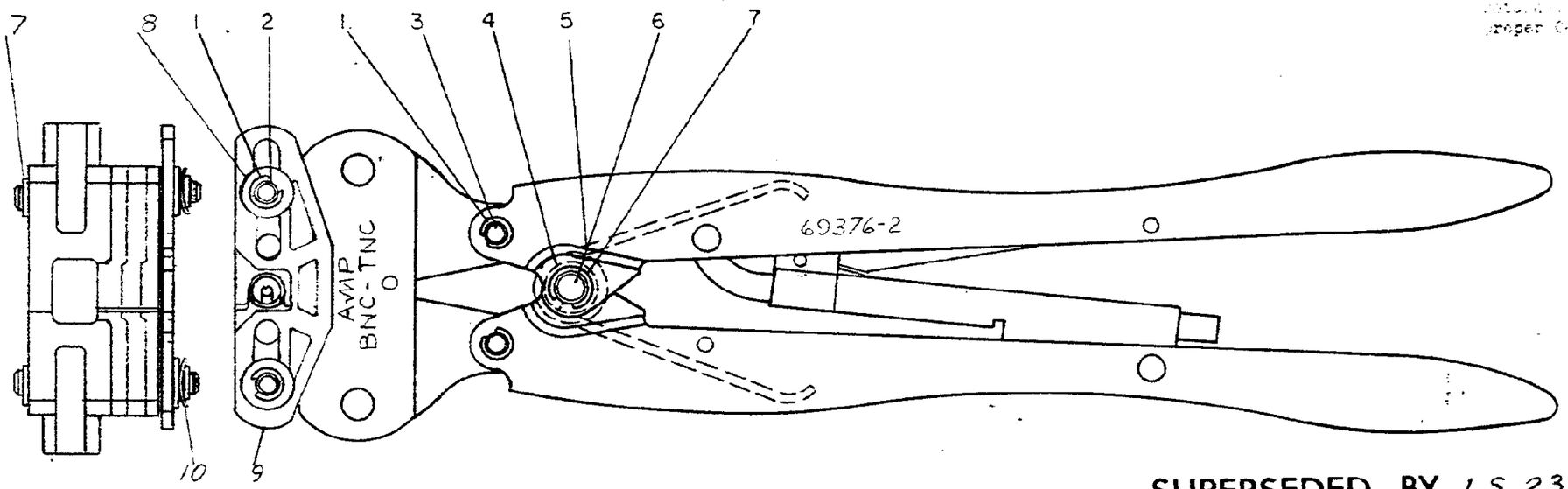

SUPERSEDED BY I.S 2349.

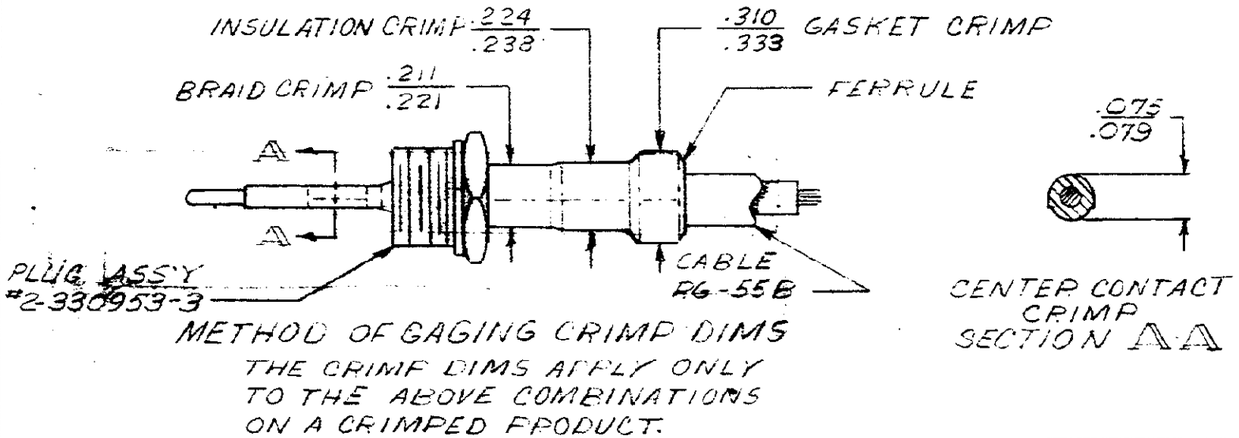

METHOD OF GAGING CRIMP DIMS
THE CRIMP DIMS APPLY ONLY TO THE ABOVE COMBINATIONS ON A CRIMPED PRODUCT.

DWG SIZE	NUMBER	NAME	REMARKS	ITEM NO
2	24058-8	CURVED WASHER		10
1	307089-2	LOCATOR		9
2	125115-1	WASHER		8
4	21045-6	RING-RETAINING		7
1	300449	PIN-RETAINING		6
1	39364	SPRING		5
1	39366	COLLAR		4
2	38783	PIN-RETAINING		3
2	1-306055-3	PIN-RETAINING		2
6	21045-3	RING-RETAINING		1

LTR	REVISION RECORD	DR	CHK	DATE
E1	SUP. BY I.S. 2349	E.N.F.	E.N.F.	3-25-72
E	REVISED	PL		3-1-71
D	REVISED	B.S.	EJF	1-11-71
C	REVISED	PL	EJF	11-25-69
B	REVISED	PL	E.N.F.	4-5-69
A	REVISED	B.S.	PL	8-4-67

NUMBER 69376-2

REQUIRED PER ASSEMBLY

DESCRIPTION

©1967 BY AMP INCORPORATED. ALL RIGHTS RESERVED
AMP PRODUCTS COVERED BY PATENTS AND/OR PATENTS PENDING.

CUSTOMER COPY REFERENCE ONLY

DR A. J. Flaynik 3-16-67
CHK R. J. Jaquez 3-29-67
DE
APP E. J. Kirk 4-10-67

MATERIAL AND FINISH —"—
WIRE – RANGE – INSULATION RG-55B —"—
TOLERANCE EXCEPT AS NOTED ± .015 ± 1° 0'
SCALE 1—1

AMP INCORPORATED HARRISBURG PENNA
CLASS —"—
TYPE BNC-TNC
LOC M B NO 69376-2 REV E1

NAME HAND TOOL ASSEMBLY

PRINT DATE 18 E-1