SN74AHC595 8-Bit Shift Registers With 3-State Output Registers

1 Features

- Operating Range: 2-V to 5.5-V V_{CC}
- 8-Bit Serial-In, Parallel-Out Shift
- Latch-Up Performance Exceeds 100 mA Per JESD 78, Class II
- ESD Protection Exceeds JESD 22
  - 2000-V Human-Body Model (A114-A)
  - 200-V Machine Model (A115-A)
  - 1000-V Charged-Device Model (C101)

2 Applications

- Network Switches
- Power Infrastructures
- LED Displays
- Servers

3 Description

The SN74AHC595 device contains an 8-bit serial-in, parallel-out shift register that feeds an 8-bit D-type storage register. The storage register has parallel 3-state outputs. Separate clocks are provided for both the shift and storage registers. The shift register has a direct overriding clear ($\overline{SRCLR}$) input, a serial (SER) input, and a serial output for cascading. When the output-enable ($\overline{OE}$) input is high, all outputs except QH′ are in the high-impedance state.

Device Information

PART NUMBER	PACKAGE	BODY SIZE (NOM)
SN74AHC595N	PDIP (16)	19.31 mm × 6.35 mm
SN74AHC595D	SOIC (16)	9.90 mm × 3.90 mm
SN74AHC595DB	SSOP (16)	6.20 mm × 5.30 mm
SN74AHC595PW	TSSOP (16)	5.00 mm × 4.40 mm

(1) For all available packages, see the orderable addendum at the end of the data sheet.

Logic Diagram (Positive Logic)

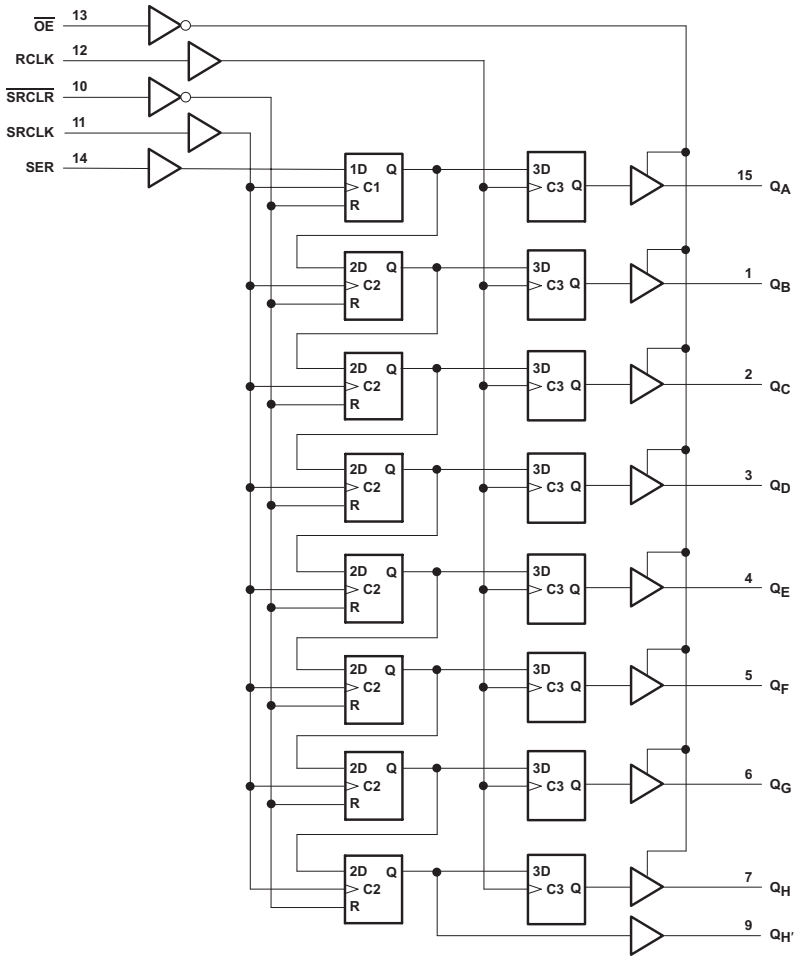

An IMPORTANT NOTICE at the end of this data sheet addresses availability, warranty, changes, use in safety-critical applications, intellectual property matters and other important disclaimers. PRODUCTION DATA.

Table of Contents

1 Features ... 1
2 Applications ... 1
3 Description ... 1
4 Revision History ... 2
5 Pin Configuration and Functions ... 3
6 Specifications ... 4
6.1 Absolute Maximum Ratings ... 4
6.2 ESD Ratings ... 4
6.3 Recommended Operating Conditions ... 4
6.4 Thermal Information ... 5
6.5 Electrical Characteristics ... 5
6.6 Operating Characteristics ... 6
6.7 Timing Requirements: V_{CC} = 3.3 V ± 0.3 V ... 6
6.8 Timing Requirements: V_{CC} = 5 V ± 0.5 V ... 7
6.9 Switching Characteristics: V_{CC} = 3.3 V ± 0.3 V ... 7
6.10 Switching Characteristics: V_{CC} = 5 V ± 0.5 V ... 9
6.11 Typical Characteristics ... 11
7 Parameter Measurement Information ... 12
8 Detailed Description ... 13
8.1 Overview ... 13
8.2 Functional Block Diagram ... 13
8.3 Feature Description ... 14
8.4 Device Functional Modes ... 14
9 Application and Implementation ... 15
9.1 Application Information ... 15
9.2 Typical Application ... 15
10 Power Supply Recommendations ... 17
11 Layout ... 17
11.1 Layout Guidelines ... 17
11.2 Layout Example ... 17
12 Device and Documentation Support ... 18
12.1 Documentation Support ... 18
12.2 Community Resources ... 18
12.3 Trademarks ... 18
12.4 Electrostatic Discharge Caution ... 18
12.5 Glossary ... 18
13 Mechanical, Packaging, and Orderable Information ... 18

4 Revision History

NOTE: Page numbers for previous revisions may differ from page numbers in the current version.

Changes from Revision J (July 2013) to Revision K	Page
• Deleted SN54AHC595 device from the data sheet	1
• Added *Device Information* table, *Pin Functions* table, *ESD Ratings* table, *Thermal Information* table, *Detailed Description* section, *Applications and Implementation* section, *Power Supply Recommendations* section, *Layout* section, *Device and Documentation Support* section, and *Mechanical, Packaging, and Orderable Information* section	1

Changes from Revision I (June 2004) to Revision J	Page
• Changed Updated document to new TI data sheet format.	1
• Extended operating temperature range to 125°C	4

Copyright © 1996–2015, Texas Instruments Incorporated

5 Pin Configuration and Functions

D, DB, N, PW Packages
16-Pin SOIC, SSOP, PDIP, TSSOP
Top View

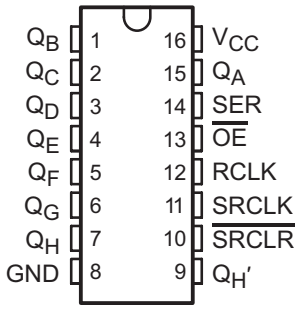

Pin Functions

PIN		I/O	DESCRIPTION
NAME	NO.		
GND	8	—	Ground Pin
$\overline{OE}$	13	I	Output Enable
Q_A	15	O	Q_A Output
Q_B	1	O	Q_B Output
Q_C	2	O	Q_C Output
Q_D	3	O	Q_D Output
Q_E	4	O	Q_E Output
Q_F	5	O	Q_F Output
Q_G	6	O	Q_G Output
Q_H	7	O	Q_H Output
$Q_{H'}$	9	O	$Q_{H'}$ Output
RCLK	12	I	RCLK Input
SER	14	I	SER Input
SRCLK	11	I	SRCLK Input
$\overline{SRCLR}$	10	I	$\overline{SRCLR}$ Input
V_{CC}	16	—	Power Pin

Copyright © 1996–2015, Texas Instruments Incorporated

6 Specifications

6.1 Absolute Maximum Ratings

over operating free-air temperature range (unless otherwise noted)[1]

			MIN	MAX	UNIT
V_{CC}	Supply voltage		–0.5	7	V
V_I	Input voltage[2]		–0.5	7	V
V_O	Output voltage[2]		–0.5	V_{CC} + 0.5	V
I_{IK}	Input clamp current	(V_I < 0)		–20	mA
I_{OK}	Output clamp current	(V_O < 0 or V_O > V_{CC})		±20	mA
I_O	Continuous output current	(V_O = 0 to V_{CC})		±25	mA
	Continuous current through V_{CC} or GND			±75	mA
T_J	Junction temperature			150	°C
T_{stg}	Storage temperature		–65	150	°C

(1) Stresses beyond those listed under *Absolute Maximum Ratings* may cause permanent damage to the device. These are stress ratings only, and functional operation of the device at these or any other conditions beyond those indicated under *Recommended Operating Conditions* is not implied. Exposure to absolute-maximum-rated conditions for extended periods may affect device reliability.
(2) The input and output voltage ratings may be exceeded if the input and output current ratings are observed.

6.2 ESD Ratings

			VALUE	UNIT
$V_{(ESD)}$	Electrostatic discharge	Human body model (HBM), per ANSI/ESDA/JEDEC JS-001[1]	±2000	V
		Charged device model (CDM), per JEDEC specification JESD22-C101[2]	±1000	

(1) JEDEC document JEP155 states that 500-V HBM allows safe manufacturing with a standard ESD control process.
(2) JEDEC document JEP157 states that 250-V CDM allows safe manufacturing with a standard ESD control process.

6.3 Recommended Operating Conditions

over operating free-air temperature range (unless otherwise noted)[1]

			MIN	NOM	MAX	UNIT
V_{CC}	Supply voltage		2		5.5	V
V_{IH}	High-level input voltage	V_{CC} = 2 V	1.5			V
		V_{CC} = 3 V	2.1			
		V_{CC} = 5.5 V	3.85			
V_{IL}	Low-level Input voltage	V_{CC} = 2 V			0.5	V
		V_{CC} = 3 V			0.9	
		V_{CC} = 5.5 V			1.65	
V_I	Input voltage		0		5.5	V
V_O	Output voltage		0		V_{CC}	V
I_{OH}	High-level output current	V_{CC} = 2 V			–50	µA
		V_{CC} = 3.3 V ± 0.3 V			–4	mA
		V_{CC} = 5 V ± 0.5 V			–8	
I_{OL}	Low-level output current	V_{CC} = 2 V			50	µA
		V_{CC} = 3.3 V ± 0.3 V			4	mA
		V_{CC} = 5 V ± 0.5 V			8	
Δt/Δv	Input transition rise or fall rate	V_{CC} = 3.3 V ± 0.3 V			100	ns/V
		V_{CC} = 5 V ± 0.5 V			20	
T_A	Operating free-air temperature		–40		125	°C

(1) All unused inputs of the device must be held at V_{CC} or GND to ensure proper device operation. Refer to the TI application report, *Implications of Slow or Floating CMOS Inputs*, SCBA004.

Copyright © 1996–2015, Texas Instruments Incorporated

6.4 Thermal Information

THERMAL METRIC[1]		SN74AHC595				UNIT
		D (SOIC)	DB (SSOP)	N (PDIP)	PW (TSSOP)	
		16 PINS	16 PINS	16 PINS	16 PINS	
$R_{\theta JA}$	Junction-to-ambient thermal resistance	73	97.8	47.8	106.1	°C/W
$R_{\theta JC(top)}$	Junction-to-case (top) thermal resistance	—	48.1	35.1	40.8	°C/W
$R_{\theta JB}$	Junction-to-board thermal resistance	—	48.5	27.8	51.1	°C/W
ψ_{JT}	Junction-to-top characterization parameter	—	10.0	20.1	3.8	°C/W
ψ_{JB}	Junction-to-board characterization parameter	—	47.9	27.7	50.6	°C/W

(1) For more information about traditional and new thermal metrics, see the *Semiconductor and IC Package Thermal Metrics* application report, SPRA953.

6.5 Electrical Characteristics

over operating free-air temperature range (unless otherwise noted) [1]

PARAMETER	TEST CONDITIONS			V_{CC}	MIN	TYP	MAX	UNIT
V_{OH}	I_{OH} = –50 µA	T_A = 25°C		2 V	1.9	2		V
		T_A = –40°C to 85°C			1.9			
		T_A = –40°C to 125°C Recommended			1.9			
	I_{OH} = –50 µA	T_A = 25°C		3 V	2.9	3		
		T_A = –40°C to 85°C			2.9			
		T_A = –40°C to 125°C Recommended			2.9			
	I_{OH} = –50 µA	T_A = 25°C		4.5 V	4.4	4.5		
		T_A = –40°C to 85°C			4.4			
		T_A = –40°C to 125°C Recommended			4.4			
	I_{OH} = –4 mA	T_A = 25°C		3 V	2.58			
		T_A = –40°C to 85°C			2.48			
		T_A = –40°C to 125°C Recommended			2.48			
	I_{OH} = –8 mA	T_A = 25°C		4.5 V	3.94			
		T_A = –40°C to 85°C			3.8			
		T_A = –40°C to 125°C Recommended			3.8			
V_{OL}	I_{OL} = 50 µA	T_A = 25°C		2 V			0.1	V
		T_A = –40°C to 85°C					0.1	
		T_A = –40°C to 125°C Recommended					0.1	
	I_{OL} = 50 µA	T_A = 25°C		3 V			0.1	
		T_A = –40°C to 85°C					0.1	
		T_A = –40°C to 125°C Recommended					0.1	
	I_{OL} = 50 µA	T_A = 25°C		4.5 V			0.1	
		T_A = –40°C to 85°C					0.1	
		T_A = –40°C to 125°C Recommended					0.1	
	I_{OL} = 4 mA	T_A = 25°C		3 V			0.36	
		T_A = –40°C to 85°C					0.44	
		T_A = –40°C to 125°C Recommended					0.44	
	I_{OL} = 8 mA	T_A = 25°C		4.5 V			0.36	
		T_A = –40°C to 85°C					0.44	
		T_A = –40°C to 125°C Recommended					0.44	
I_I	V_I = 5.5 V or GND	T_A = 25°C		0 V to 5.5 V			±0.1	µA
		T_A = –40°C to 85°C					±1	
		T_A = –40°C to 125°C Recommended					±1	
I_{OZ}	V_I = V_{CC} or GND, V_O = V_{CC} or GND, $\overline{OE}$ = V_{IH} or V_{IL},	Q_A – Q_H	T_A = 25°C	5.5 V			±0.25	µA
			T_A = –40°C to 85°C				±2.5	
			T_A = –40°C to 125°C Recommended				±2.5	

(1) On products compliant to MIL-PRF-38535, this parameter is not production tested at V_{CC} = 0 V.

Copyright © 1996–2015, Texas Instruments Incorporated

Electrical Characteristics (continued)

over operating free-air temperature range (unless otherwise noted) (1)

PARAMETER	TEST CONDITIONS			V_{CC}	MIN	TYP	MAX	UNIT
I_{CC}	$V_I = V_{CC}$ or GND,	$I_O = 0$	$T_A = 25°C$	5.5 V			4	µA
			$T_A = –40°C$ to 85°C				40	
			$T_A = –40°C$ to 125°C Recommended				40	
C_i	$V_I = V_{CC}$ or GND	$T_A = 25°C$		5 V		3	10	pF
		$T_A = –40°C$ TO 85°C					10	
C_O	$V_O = V_{CC}$ or GND,	$T_A = 25°C$		5 V		5.5		pF

6.6 Operating Characteristics

$V_{CC} = 5$ V, $T_A = 25°C$

PARAMETER		TEST CONDITIONS		TYP	UNIT
C_{pd}	Power dissipation capacitance	No load,	f = 1 MHz	25.2	pF

6.7 Timing Requirements: V_{CC} = 3.3 V ± 0.3 V

over recommended operating free-air temperature range (unless otherwise noted)

				MIN	MAX	UNIT
t_w	Pulse duration	SRCLK high or low	$T_A = 25°C$	5		ns
			$T_A = –40°C$ to 85°C	5		
			$T_A = –40°C$ to 125°C Recommended	6		
		RCLK high or low	$T_A = 25°C$	5		
			$T_A = –40°C$ to 85°C	5		
			$T_A = –40°C$ to 125°C Recommended	6		
		$\overline{\text{SRCLR}}$ low	$T_A = 25°C$	5		
			$T_A = –40°C$ to 85°C	5		
			$T_A = –40°C$ to 125°C Recommended	6.5		
t_{su}	Set-up time	SER before SRCLK↑	$T_A = 25°C$	3.5		ns
			$T_A = –40°C$ to 85°C	3.5		
			$T_A = –40°C$ to 125°C Recommended	4.5		
		SRCLK↑ before RCLK↑ (1)	$T_A = 25°C$	8		
			$T_A = –40°C$ to 85°C	8.5		
			$T_A = –40°C$ to 125°C Recommended	9.5		
		$\overline{\text{SRCLR}}$ low before RCLK↑	$T_A = 25°C$	8		
			$T_A = –40°C$ to 85°C	9		
			$T_A = –40°C$ to 125°C Recommended	10		
		$\overline{\text{SRCLR}}$ high (inactive) before SRCLK↑	$T_A = 25°C$	3		
			$T_A = –40°C$ to 85°C	3		
			$T_A = –40°C$ to 125°C Recommended	4		
t_h	Hold time	SER after SRCLK↑	$T_A = 25°C$	1.5		ns
			$T_A = –40°C$ to 85°C	1.5		
			$T_A = –40°C$ to 125°C Recommended	2.5		

(1) This set-up time allows the storage register to receive stable data from the shift register. The clocks can be tied together, in which case the shift register is one clock pulse ahead of the storage register.

Copyright © 1996–2015, Texas Instruments Incorporated

6.8 Timing Requirements: V_{CC} = 5 V ± 0.5 V

				MIN	NOM	MAX	UNIT
t_W	Pulse duration	SRCLK high or low	T_A = 25°C	5			ns
			T_A = –40°C to 85°C	5			
			T_A = –40°C to 125°C Recommended	6			
		RCLK high or low	T_A = 25°C	5			
			T_A = –40°C to 85°C	5			
			T_A = –40°C to 125°C Recommended	6			
		$\overline{\text{SRCLR}}$ low	T_A = 25°C	5			
			T_A = –40°C to 85°C	5			
			T_A = –40°C to 125°C Recommended	6.2			
t_{su}	Set-up time	SER before SRCLK↑	T_A = 25°C	3			ns
			T_A = –40°C to 85°C	3			
			T_A = –40°C to 125°C Recommended	4			
		SRCLK↑ before RCLK↑ (1)	T_A = 25°C	5			
			T_A = –40°C to 85°C	5			
			T_A = –40°C to 125°C Recommended	6			
		$\overline{\text{SRCLR}}$ low before RCLK↑	T_A = 25°C	5			
			T_A = –40°C to 85°C	5			
			T_A = –40°C to 125°C Recommended	6			
		$\overline{\text{SRCLR}}$ high (inactive) before SRCLK↑	T_A = 25°C	2.5			
			T_A = –40°C to 85°C	2.5			
			T_A = –40°C to 125°C Recommended	3.5			
t_h	Hold time	SER after SRCLK↑	T_A = 25°C	2			ns
			T_A = –40°C to 85°C	2			
			T_A = –40°C to 125°C Recommended	3			

(1) This set-up time allows the storage register to receive stable data from the shift register. The clocks can be tied together, in which case the shift register is one clock pulse ahead of the storage register.

6.9 Switching Characteristics: V_{CC} = 3.3 V ± 0.3 V

over operating free-air temperature range (unless otherwise noted)

PARAMETER	FROM (INPUT)	TO (OUTPUT)	LOAD CAPACITANCE	TEST CONDITIONS	MIN	TYP	MAX	UNIT
f_{max}			C_L = 15 pF	T_A = 25°C	80 (1)	120 (1)		MHz
				T_A = –40°C to 85°C	70			
				T_A = –40°C to 125°C Recommended	60			
			C_L = 50 pF	T_A = 25°C	55	105		
				T_A = –40°C to 85°C	50			
				T_A = –40°C to 125°C Recommended	40			
t_{PLH}	RCLK	Q_A – Q_H	C_L = 15 pF	T_A = 25°C		6 (1)	11.9 (1)	ns
				T_A = –40°C to 85°C	1		13.5	
				T_A = –40°C to 125°C Recommended	1		14.9	
t_{PHL}	RCLK	Q_A – Q_H	C_L = 15 pF	T_A = 25°C		6 (1)	11.9 (1)	ns
				T_A = –40°C to 85°C	1		13.5	
				T_A = –40°C to 125°C Recommended	1		14.9	
t_{PLH}	SRCLK	$Q_{H'}$	C_L = 15 pF	T_A = 25°C		6.6 (1)	13 (1)	ns
				T_A = –40°C to 85°C	1		15	
				T_A = –40°C to 125°C Recommended	1		16.4	
t_{PHL}	SRCLK	$Q_{H'}$	C_L = 15 pF	T_A = 25°C		6.6 (1)	13 (1)	ns
				T_A = –40°C to 85°C	1		15	
				T_A = –40°C to 125°C Recommended	1		16.4	

(1) On products compliant to MIL-PRF-38535, this parameter is not production tested.

Copyright © 1996–2015, Texas Instruments Incorporated

Switching Characteristics: V_{CC} = 3.3 V ± 0.3 V (continued)

over operating free-air temperature range (unless otherwise noted)

PARAMETER	FROM (INPUT)	TO (OUTPUT)	LOAD CAPACITANCE	TEST CONDITIONS	MIN	TYP	MAX	UNIT
t_{PHL}	$\overline{SRCLR}$	$Q_{H'}$	C_L = 15 pF	T_A = 25°C		6.2[1]	12.8[1]	ns
				T_A = –40°C to 85°C	1		13.7	
				T_A = –40°C to 125°C Recommended	1		15	
t_{PZH}	$\overline{OE}$	Q_A – Q_H	C_L = 15 pF	T_A = 25°C		6[1]	11.5[1]	ns
				T_A = –40°C to 85°C	1		13.5	
				T_A = –40°C to 125°C Recommended	1		14.9	
t_{PZL}	$\overline{OE}$	Q_A – Q_H	C_L = 15 pF	T_A = 25°C		7.8[1]	11.5[1]	ns
				T_A = –40°C to 85°C	1		13.5	
				T_A = –40°C to 125°C Recommended	1		14.9	
t_{PLH}	RCLK	Q_A – Q_H	C_L = 50 pF	T_A = 25°C		7.9	15.4	ns
				T_A = –40°C to 85°C	1		17	
				T_A = –40°C to 125°C Recommended	1		18.6	
t_{PHL}	RCLK	Q_A – Q_H	C_L = 50 pF	T_A = 25°C		7.9	15.4	ns
				T_A = –40°C to 85°C	1		17	
				T_A = –40°C to 125°C Recommended	1		18.6	
t_{PLH}	SRCLK	$Q_{H'}$	C_L = 50 pF	T_A = 25°C		9.2	16.5	ns
				T_A = –40°C to 85°C	1		18.5	
				T_A = –40°C to 125°C Recommended	1		20	
t_{PHL}	SRCLK	$Q_{H'}$	C_L = 50 pF	T_A = 25°C		9.2	16.5	ns
				T_A = –40°C to 85°C	1		18.5	
				T_A = –40°C to 125°C Recommended	1		20	
t_{PHL}	$\overline{SRCLR}$	$Q_{H'}$	C_L = 50 pF	T_A = 25°C		9	16.3	ns
				T_A = –40°C to 85°C	1		17.2	
				T_A = –40°C to 125°C Recommended	1		18.7	
t_{PZH}	$\overline{OE}$	Q_A – Q_H	C_L = 50 pF	T_A = 25°C		7.8	15	ns
				T_A = –40°C to 85°C	1		17	
				T_A = –40°C to 125°C Recommended	1		18.6	
t_{PZL}	$\overline{OE}$	Q_A – Q_H	C_L = 50 pF	T_A = 25°C		9.6	15	ns
				T_A = –40°C to 85°C	1		17	
				T_A = –40°C to 125°C Recommended	1		18.6	
t_{PHZ}	$\overline{OE}$	Q_A – Q_H	C_L = 50 pF	T_A = 25°C		8.1	15.7	ns
				T_A = –40°C to 85°C	1		16.2	
				T_A = –40°C to 125°C Recommended	1		17.4	
t_{PLZ}	$\overline{OE}$	Q_A – Q_H	C_L = 50 pF	T_A = 25°C		9.3	15.7	ns
				T_A = –40°C to 85°C	1		16.2	
				T_A = –40°C to 125°C Recommended	1		17.4	

Copyright © 1996–2015, Texas Instruments Incorporated

6.10 Switching Characteristics: V_{CC} = 5 V ± 0.5 V

over operating free-air temperature range (unless otherwise noted)

PARAMETER	FROM (INPUT)	TO (OUTPUT)	LOAD CAPACITANCE	TEST CONDITIONS	MIN	TYP	MAX	UNIT
f_{max}			C_L = 15 pF	T_A = 25°C	135(1)	170(1)		MHz
				T_A = –40°C to 85°C	115			
			C_L = 50 pF	T_A = 25°C	95	140		
				T_A = –40°C to 85°C	85			
t_{PLH}	RCLK	Q_A – Q_H	C_L = 15 pF	T_A = 25°C		4.3(1)	7.4(1)	ns
				T_A = –40°C to 85°C	1		8.5	
t_{PHL}	RCLK	Q_A – Q_H	C_L = 15 pF	T_A = 25°C		4.3(1)	7.4(1)	ns
				T_A = –40°C to 85°C	1		8.5	
t_{PLH}	SRCLK	$Q_{H'}$	C_L = 15 pF	T_A = 25°C		4.5(1)	8.2(1)	ns
				T_A = –40°C to 85°C	1		9.4	
t_{PHL}	SRCLK	$Q_{H'}$	C_L = 15 pF	T_A = 25°C		4.5(1)	8.2(1)	ns
				T_A = –40°C to 85°C	1		9.4	
t_{PHL}	$\overline{SRCLR}$	$Q_{H'}$	C_L = 15 pF	T_A = 25°C		4.5(1)	8(1)	ns
				T_A = –40°C to 85°C	1		9.1	
t_{PZH}	$\overline{OE}$	Q_A – Q_H	C_L = 15 pF	T_A = 25°C		4.3(1)	8.6(1)	ns
				T_A = –40°C to 85°C	1		10	
t_{PZL}	$\overline{OE}$	Q_A – Q_H	C_L = 15 pF	T_A = 25°C		5.4(1)	8.6(1)	ns
				T_A = –40°C to 85°C	1		10	
t_{PLH}	RCLK	Q_A – Q_H	C_L = 50 pF	T_A = 25°C		5.6	9.4	ns
				T_A = –40°C to 85°C	1		10.5	
t_{PHL}	RCLK	Q_A – Q_H	C_L = 50 pF	T_A = 25°C		5.6	9.4	ns
				T_A = –40°C to 85°C	1		10.5	
t_{PLH}	SRCLK	$Q_{H'}$	C_L = 50 pF	T_A = 25°C		6.4	10.2	ns
				T_A = –40°C to 85°C	1		11.4	
t_{PHL}	SRCLK	$Q_{H'}$	C_L = 50 pF	T_A = 25°C		6.4	10.2	ns
				T_A = –40°C to 85°C	1		11.4	
t_{PHL}	$\overline{SRCLR}$	$Q_{H'}$	C_L = 50 pF	T_A = 25°C		6.4	10	ns
				T_A = –40°C to 85°C	1		11.1	
t_{PZH}	$\overline{OE}$	Q_A – Q_H	C_L = 50 pF	T_A = 25°C		5.7	10.6	ns
				T_A = –40°C to 85°C	1		12	
t_{PZL}	$\overline{OE}$	Q_A – Q_H	C_L = 50 pF	T_A = 25°C		6.8	10.6	ns
				T_A = –40°C to 85°C	1		12	
t_{PHZ}	$\overline{OE}$	Q_A – Q_H	C_L = 50 pF	T_A = 25°C		3.5	10.3	ns
				T_A = –40°C to 85°C	1		11	
t_{PLZ}	$\overline{OE}$	Q_A – Q_H	C_L = 50 pF	T_A = 25°C		3.4	10.3	ns
				T_A = –40°C to 85°C	1		11	

(1) On products compliant to MIL-PRF-38535, this parameter is not production tested.

Copyright © 1996–2015, Texas Instruments Incorporated

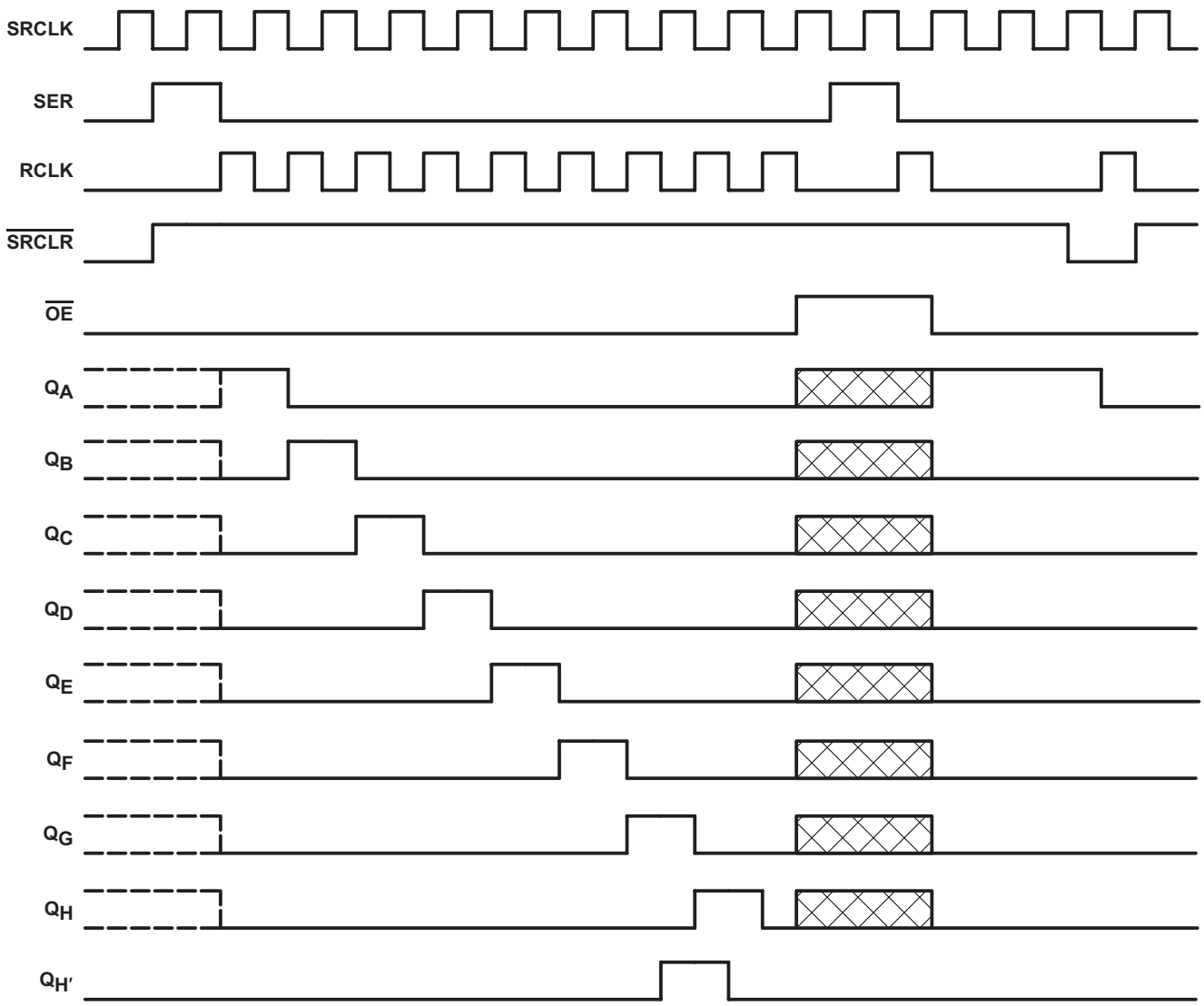

NOTE: implies that the output is in 3-State mode.

Figure 1. Timing Diagram

Copyright © 1996–2015, Texas Instruments Incorporated

6.11 Typical Characteristics

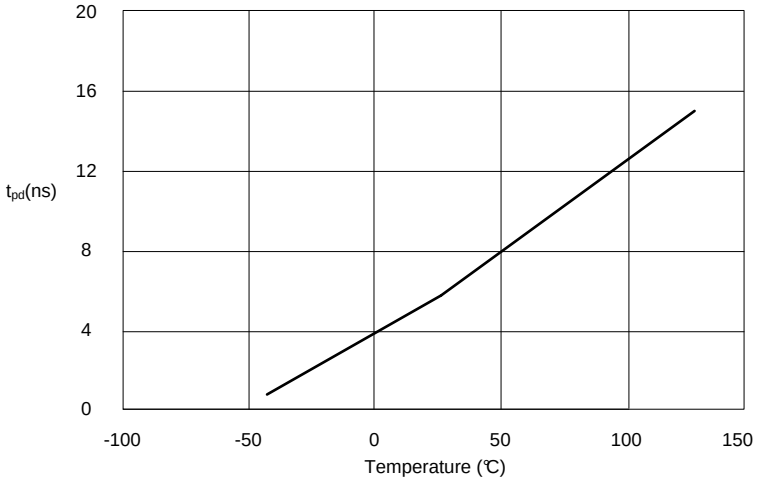

V_{CC} = 3.3 V 15-pF Load

Figure 2. SN74AHC595 RCLK to Q TPD vs Temperature

7 Parameter Measurement Information

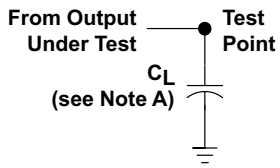

LOAD CIRCUIT FOR
TOTEM-POLE OUTPUTS

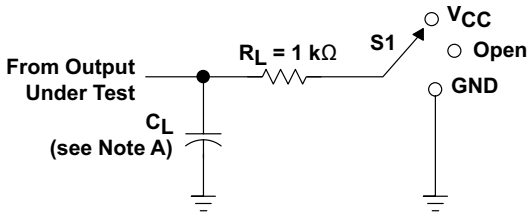

LOAD CIRCUIT FOR
3-STATE AND OPEN-DRAIN OUTPUTS

TEST	S1
t_{PLH}/t_{PHL}	Open
t_{PLZ}/t_{PZL}	V_{CC}
t_{PHZ}/t_{PZH}	GND
Open Drain	V_{CC}

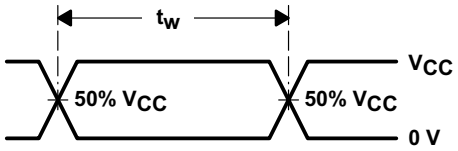

VOLTAGE WAVEFORMS
PULSE DURATION

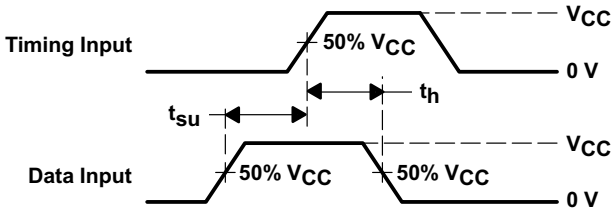

VOLTAGE WAVEFORMS
SETUP AND HOLD TIMES

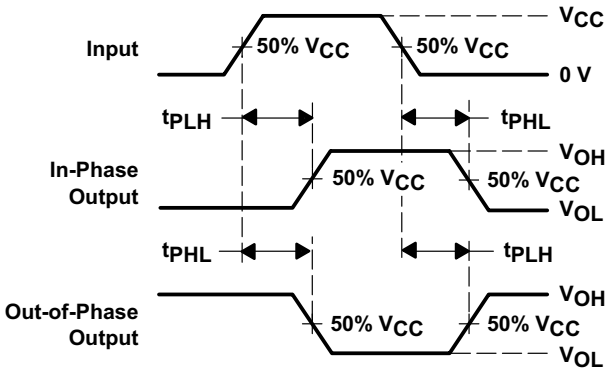

VOLTAGE WAVEFORMS
PROPAGATION DELAY TIMES
INVERTING AND NONINVERTING OUTPUTS

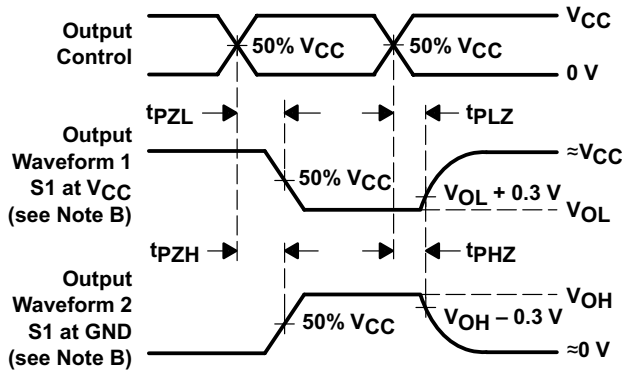

VOLTAGE WAVEFORMS
ENABLE AND DISABLE TIMES
LOW- AND HIGH-LEVEL ENABLING

A. C_L includes probe and jig capacitance.

B. Waveform 1 is for an output with internal conditions such that the output is low except when disabled by the output control.
Waveform 2 is for an output with internal conditions such that the output is high except when disabled by the output control.

C. All input pulses are supplied by generators having the following characteristics: PRR ≤ 1 MHz, Z_O = 50 Ω, t_r ≤ 3 ns, t_f ≤ 3 ns.

D. The outputs are measured one at a time with one input transition per measurement.

E. All parameters and waveforms are not applicable to all devices.

Figure 3. Load Circuit and Voltage Waveforms

Copyright © 1996–2015, Texas Instruments Incorporated

8 Detailed Description

8.1 Overview

The SN74AHC595 device is part of the AHC family of logic devices intended for CMOS applications. The SN74HC595 device is an 8-bit shift register that feeds an 8-bit D-type storage register.

Both the shift-register clock (SRCLK) and storage-register clock (RCLK) are positive-edge triggered. If both clocks are connected together, the shift register is always one clock pulse ahead of the storage register.

8.2 Functional Block Diagram

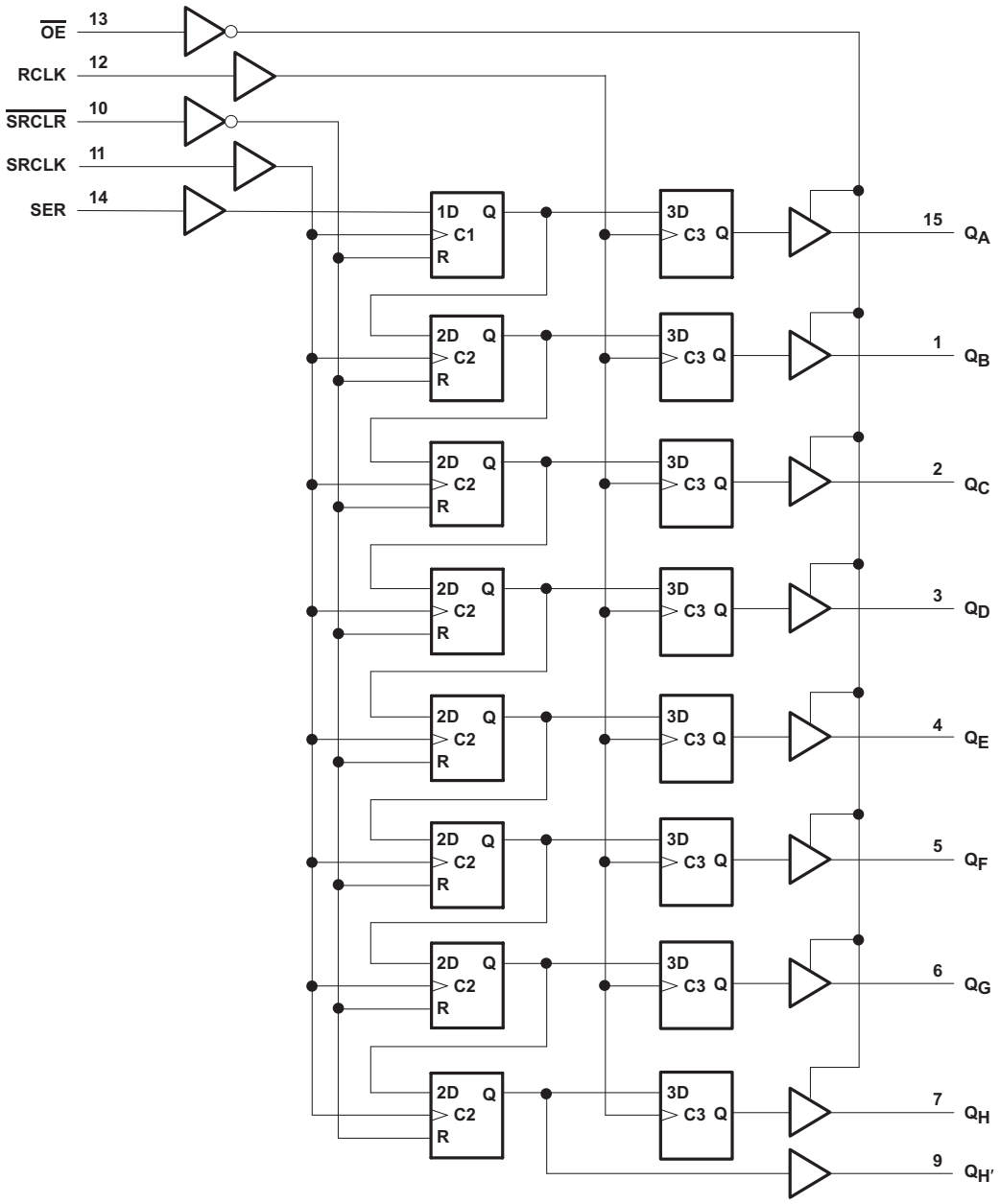

8.3 Feature Description

The SN74AHC595 device is an 8-bit serial-in, parallel-out shift registers that have a wide operating voltage range from 2 V to 5.5 V and a low current consumption of 40-µA (max) I_{CC}.

8.4 Device Functional Modes

Table 1. Function Table

INPUTS					FUNCTION
SER	SRCLK	$\overline{SRCLR}$	RCLK	$\overline{OE}$	
X	X	X	X	H	Outputs Q_A–Q_H are disabled.
X	X	X	X	L	Outputs Q_A–Q_H are enabled.
X	X	L	X	X	Shift register is cleared.
L	↑	H	X	X	First stage of the shift register goes low. Other stages store the data of previous stage, respectively.
H	↑	H	X	X	First stage of the shift register goes high. Other stages store the data of previous stage, respectively.
X	X	X	↑	X	Shift-register data is stored into the storage register.

Copyright © 1996–2015, Texas Instruments Incorporated

9 Application and Implementation

NOTE

Information in the following applications sections is not part of the TI component specification, and TI does not warrant its accuracy or completeness. TI's customers are responsible for determining suitability of components for their purposes. Customers should validate and test their design implementation to confirm system functionality.

9.1 Application Information

The SN74AHC595 device is a low-drive CMOS device that can be used for a multitude of bus-interface type applications where output ringing is a concern. The low drive and slow edge rates minimize overshoot and undershoot on the outputs. Figure 4 shows an application where eight LEDs are used to visualize the data bits contained within the shift register.

9.2 Typical Application

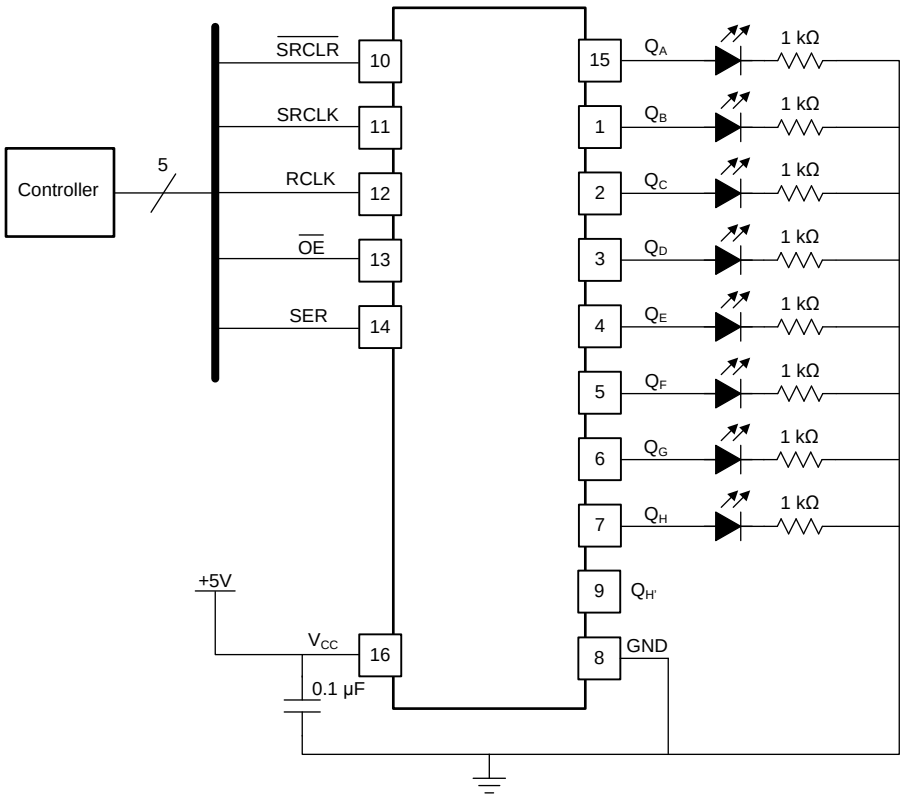

Figure 4. Shift Register Display of 8 bits

9.2.1 Design Requirements

This device uses CMOS technology and has balanced output drive. Care must be taken to avoid bus contention because it can drive currents that would exceed maximum limits. The high drive will also create fast edges into light loads, so routing and load conditions must be considered to prevent ringing.

9.2.2 Detailed Design Procedure

- Recommended input conditions:
  - Specified high and low levels. See (V_{IH} and V_{IL}) in the *Recommended Operating Conditions* table.
  - Specified high and low levels. See (V_{IH} and V_{IL}) in the *Recommended Operating Conditions* table.
  - Inputs are overvoltage tolerant allowing them to go as high as 6.0 V at any valid V_{CC}

Typical Application (continued)

- Recommend output conditions:
  - Load currents must not exceed 25 mA per output and 75 mA total for the part
  - Outputs must not be pulled above V_{CC}

9.2.3 Application Curve

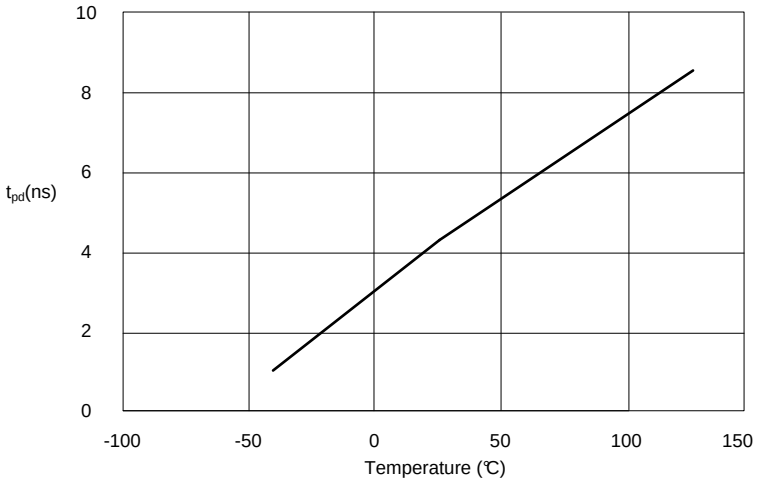

V_{CC} = 5 V 15-pF Load

Figure 5. SN74AHC595 RCLK to Q TPD vs Temperature

Copyright © 1996–2015, Texas Instruments Incorporated

10 Power Supply Recommendations

The power supply can be any voltage between the MIN and MAX supply-voltage rating located in the *Recommended Operating Conditions* table.

Each V_{CC} pin must have a good bypass capacitor to prevent power disturbance. For devices with a single supply, 0.1-µf capacitor is recommended; if there are multiple V_{CC} pins, then a 0.01-µf or a 0.022-µf capacitor is recommended for each power pin. It is acceptable to parallel multiple bypass capacitors to reject different frequencies of noise. A 0.1-µf and a 1-µf capacitor are commonly used in parallel. The bypass capacitor must be installed as close to the power pin as possible for best results.

11 Layout

11.1 Layout Guidelines

When using multiple-bit logic devices, inputs must never float.

In many cases, functions or parts of functions of digital logic devices are unused, for example, when only two inputs of a triple-input AND gate are used or only 3 of the 4 buffer gates are used. Such input pins must **not** be left unconnected because the undefined voltages at the outside connections results in undefined operational states. Figure 6 specifies the rules that must be observed under all circumstances. All unused inputs of digital logic devices must be connected to a high or low bias to prevent them from floating. The logic level that must be applied to any particular unused input depends on the function of the device. Generally, these unused inputs will be tied to GND or V_{CC}, whichever makes more sense or is more convenient. It is generally acceptable to float outputs, unless the part is a transceiver. If the transceiver has an output-enable pin, it will disable the output section of the part when asserted. This will not disable the input section of the I/Os, so they cannot float when disabled.

11.2 Layout Example

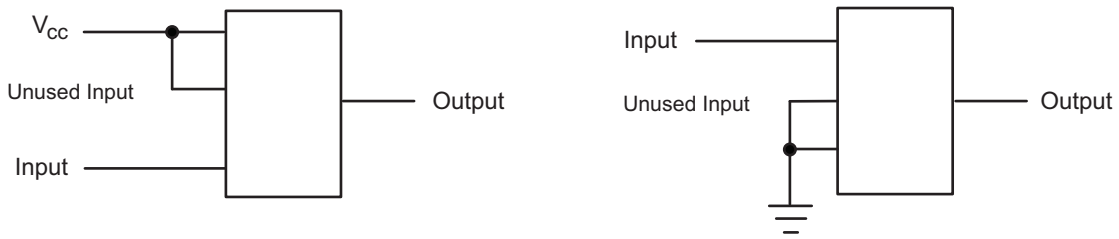

Figure 6. Layout Diagram

12 Device and Documentation Support

12.1 Documentation Support

12.1.1 Related Documentation

For related documentation, wee the following:

Implications of Slow or Floating CMOS Inputs, SCBA004

12.2 Community Resources

The following links connect to TI community resources. Linked contents are provided "AS IS" by the respective contributors. They do not constitute TI specifications and do not necessarily reflect TI's views; see TI's Terms of Use.

TI E2E™ Online Community ***TI's Engineer-to-Engineer (E2E) Community.*** Created to foster collaboration among engineers. At e2e.ti.com, you can ask questions, share knowledge, explore ideas and help solve problems with fellow engineers.

Design Support ***TI's Design Support*** Quickly find helpful E2E forums along with design support tools and contact information for technical support.

12.3 Trademarks

E2E is a trademark of Texas Instruments.
All other trademarks are the property of their respective owners.

12.4 Electrostatic Discharge Caution

These devices have limited built-in ESD protection. The leads should be shorted together or the device placed in conductive foam during storage or handling to prevent electrostatic damage to the MOS gates.

12.5 Glossary

SLYZ022 — *TI Glossary*.

This glossary lists and explains terms, acronyms, and definitions.

13 Mechanical, Packaging, and Orderable Information

The following pages include mechanical, packaging, and orderable information. This information is the most current data available for the designated devices. This data is subject to change without notice and revision of this document. For browser-based versions of this data sheet, refer to the left-hand navigation.

Copyright © 1996–2015, Texas Instruments Incorporated

PACKAGING INFORMATION

Orderable Device	Status (1)	Package Type	Package Drawing	Pins	Package Qty	Eco Plan (2)	Lead/Ball Finish (6)	MSL Peak Temp (3)	Op Temp (°C)	Device Marking (4/5)	Samples
SN74AHC595D	ACTIVE	SOIC	D	16	40	Green (RoHS & no Sb/Br)	CU NIPDAU	Level-1-260C-UNLIM	-40 to 125	AHC595	Samples
SN74AHC595DBR	ACTIVE	SSOP	DB	16	2000	Green (RoHS & no Sb/Br)	CU NIPDAU	Level-1-260C-UNLIM	-40 to 125	HA595	Samples
SN74AHC595DG4	ACTIVE	SOIC	D	16	40	Green (RoHS & no Sb/Br)	CU NIPDAU	Level-1-260C-UNLIM	-40 to 125	AHC595	Samples
SN74AHC595DR	ACTIVE	SOIC	D	16	2500	Green (RoHS & no Sb/Br)	CU NIPDAU	Level-1-260C-UNLIM	-40 to 125	AHC595	Samples
SN74AHC595DRE4	ACTIVE	SOIC	D	16	2500	Green (RoHS & no Sb/Br)	CU NIPDAU	Level-1-260C-UNLIM	-40 to 125	AHC595	Samples
SN74AHC595DRG4	ACTIVE	SOIC	D	16	2500	Green (RoHS & no Sb/Br)	CU NIPDAU	Level-1-260C-UNLIM	-40 to 125	AHC595	Samples
SN74AHC595N	ACTIVE	PDIP	N	16	25	Pb-Free (RoHS)	CU NIPDAU	N / A for Pkg Type	-40 to 125	SN74AHC595N	Samples
SN74AHC595PW	ACTIVE	TSSOP	PW	16	90	Green (RoHS & no Sb/Br)	CU NIPDAU	Level-1-260C-UNLIM	-40 to 125	HA595	Samples
SN74AHC595PWG4	ACTIVE	TSSOP	PW	16	90	Green (RoHS & no Sb/Br)	CU NIPDAU	Level-1-260C-UNLIM	-40 to 125	HA595	Samples
SN74AHC595PWR	ACTIVE	TSSOP	PW	16	2000	Green (RoHS & no Sb/Br)	CU NIPDAU | CU SN	Level-1-260C-UNLIM	-40 to 125	HA595	Samples
SN74AHC595PWRG4	ACTIVE	TSSOP	PW	16	2000	Green (RoHS & no Sb/Br)	CU NIPDAU	Level-1-260C-UNLIM	-40 to 125	HA595	Samples

(1) The marketing status values are defined as follows:
ACTIVE: Product device recommended for new designs.
LIFEBUY: TI has announced that the device will be discontinued, and a lifetime-buy period is in effect.
NRND: Not recommended for new designs. Device is in production to support existing customers, but TI does not recommend using this part in a new design.
PREVIEW: Device has been announced but is not in production. Samples may or may not be available.
OBSOLETE: TI has discontinued the production of the device.

(2) Eco Plan - The planned eco-friendly classification: Pb-Free (RoHS), Pb-Free (RoHS Exempt), or Green (RoHS & no Sb/Br) - please check http://www.ti.com/productcontent for the latest availability information and additional product content details.
TBD: The Pb-Free/Green conversion plan has not been defined.
Pb-Free (RoHS): TI's terms "Lead-Free" or "Pb-Free" mean semiconductor products that are compatible with the current RoHS requirements for all 6 substances, including the requirement that lead not exceed 0.1% by weight in homogeneous materials. Where designed to be soldered at high temperatures, TI Pb-Free products are suitable for use in specified lead-free processes.

Pb-Free (RoHS Exempt): This component has a RoHS exemption for either 1) lead-based flip-chip solder bumps used between the die and package, or 2) lead-based die adhesive used between the die and leadframe. The component is otherwise considered Pb-Free (RoHS compatible) as defined above.
Green (RoHS & no Sb/Br): TI defines "Green" to mean Pb-Free (RoHS compatible), and free of Bromine (Br) and Antimony (Sb) based flame retardants (Br or Sb do not exceed 0.1% by weight in homogeneous material)

(3) MSL, Peak Temp. - The Moisture Sensitivity Level rating according to the JEDEC industry standard classifications, and peak solder temperature.

(4) There may be additional marking, which relates to the logo, the lot trace code information, or the environmental category on the device.

(5) Multiple Device Markings will be inside parentheses. Only one Device Marking contained in parentheses and separated by a "~" will appear on a device. If a line is indented then it is a continuation of the previous line and the two combined represent the entire Device Marking for that device.

(6) Lead/Ball Finish - Orderable Devices may have multiple material finish options. Finish options are separated by a vertical ruled line. Lead/Ball Finish values may wrap to two lines if the finish value exceeds the maximum column width.

Important Information and Disclaimer: The information provided on this page represents TI's knowledge and belief as of the date that it is provided. TI bases its knowledge and belief on information provided by third parties, and makes no representation or warranty as to the accuracy of such information. Efforts are underway to better integrate information from third parties. TI has taken and continues to take reasonable steps to provide representative and accurate information but may not have conducted destructive testing or chemical analysis on incoming materials and chemicals. TI and TI suppliers consider certain information to be proprietary, and thus CAS numbers and other limited information may not be available for release.

In no event shall TI's liability arising out of such information exceed the total purchase price of the TI part(s) at issue in this document sold by TI to Customer on an annual basis.

OTHER QUALIFIED VERSIONS OF SN74AHC595 :

- Automotive: SN74AHC595-Q1

NOTE: Qualified Version Definitions:

- Automotive - Q100 devices qualified for high-reliability automotive applications targeting zero defects

TAPE AND REEL INFORMATION

REEL DIMENSIONS

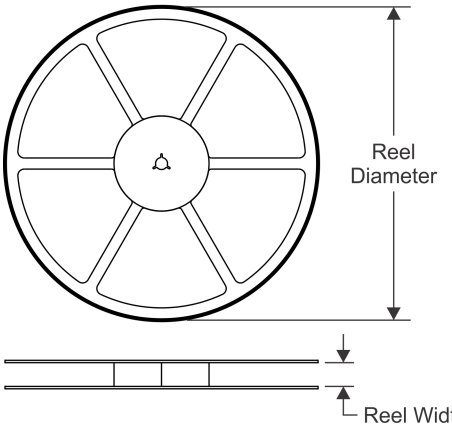

TAPE DIMENSIONS

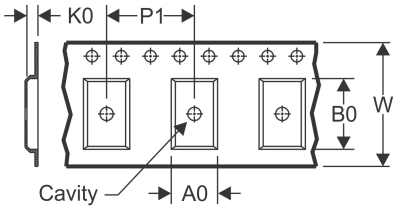

A0	Dimension designed to accommodate the component width
B0	Dimension designed to accommodate the component length
K0	Dimension designed to accommodate the component thickness
W	Overall width of the carrier tape
P1	Pitch between successive cavity centers

QUADRANT ASSIGNMENTS FOR PIN 1 ORIENTATION IN TAPE

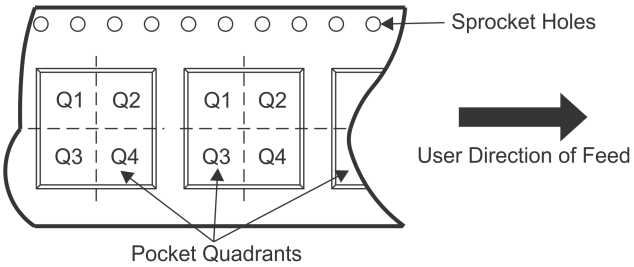

*All dimensions are nominal

Device	Package Type	Package Drawing	Pins	SPQ	Reel Diameter (mm)	Reel Width W1 (mm)	A0 (mm)	B0 (mm)	K0 (mm)	P1 (mm)	W (mm)	Pin1 Quadrant
SN74AHC595DBR	SSOP	DB	16	2000	330.0	16.4	8.2	6.6	2.5	12.0	16.0	Q1
SN74AHC595DR	SOIC	D	16	2500	330.0	16.4	6.5	10.3	2.1	8.0	16.0	Q1
SN74AHC595DR	SOIC	D	16	2500	330.0	16.4	6.5	10.3	2.1	8.0	16.0	Q1
SN74AHC595PWR	TSSOP	PW	16	2000	330.0	12.4	6.9	5.6	1.6	8.0	12.0	Q1
SN74AHC595PWR	TSSOP	PW	16	2000	330.0	12.4	6.9	5.6	1.6	8.0	12.0	Q1
SN74AHC595PWRG4	TSSOP	PW	16	2000	330.0	12.4	6.9	5.6	1.6	8.0	12.0	Q1

TAPE AND REEL BOX DIMENSIONS

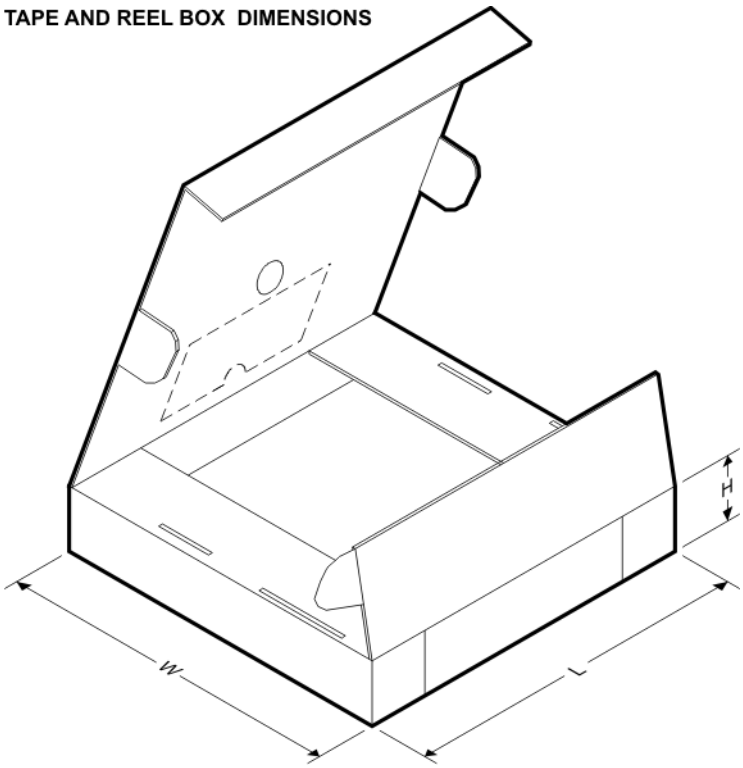

*All dimensions are nominal

Device	Package Type	Package Drawing	Pins	SPQ	Length (mm)	Width (mm)	Height (mm)
SN74AHC595DBR	SSOP	DB	16	2000	367.0	367.0	38.0
SN74AHC595DR	SOIC	D	16	2500	333.2	345.9	28.6
SN74AHC595DR	SOIC	D	16	2500	367.0	367.0	38.0
SN74AHC595PWR	TSSOP	PW	16	2000	364.0	364.0	27.0
SN74AHC595PWR	TSSOP	PW	16	2000	367.0	367.0	35.0
SN74AHC595PWRG4	TSSOP	PW	16	2000	367.0	367.0	35.0

N (R–PDIP–T**) PLASTIC DUAL–IN–LINE PACKAGE

16 PINS SHOWN

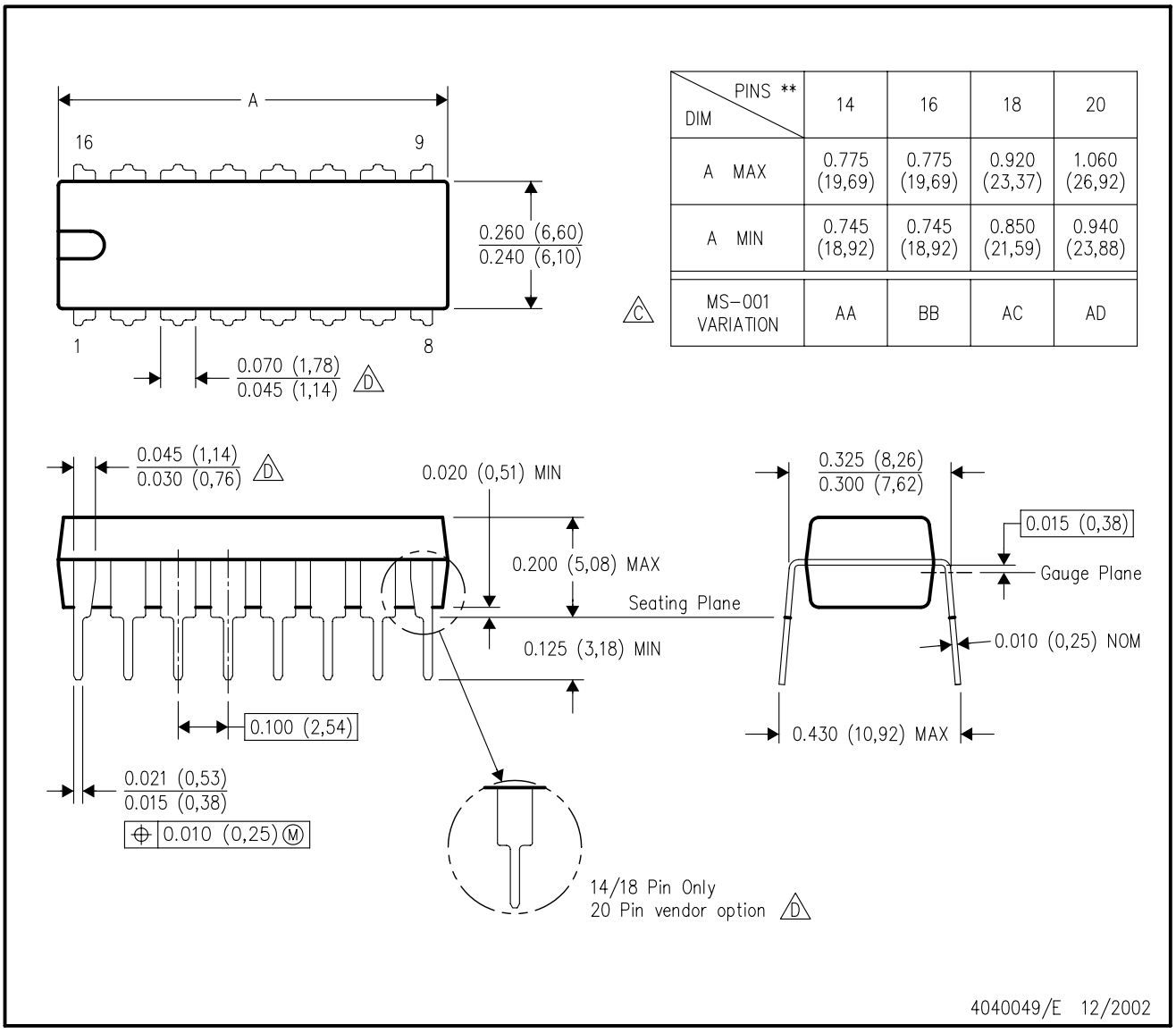

DIM \ PINS **	14	16	18	20
A MAX	0.775 (19,69)	0.775 (19,69)	0.920 (23,37)	1.060 (26,92)
A MIN	0.745 (18,92)	0.745 (18,92)	0.850 (21,59)	0.940 (23,88)
MS–001 VARIATION (C)	AA	BB	AC	AD

NOTES:
A. All linear dimensions are in inches (millimeters).
B. This drawing is subject to change without notice.
C. Falls within JEDEC MS–001, except 18 and 20 pin minimum body length (Dim A).
D. The 20 pin end lead shoulder width is a vendor option, either half or full width.

D (R–PDSO–G16) PLASTIC SMALL OUTLINE

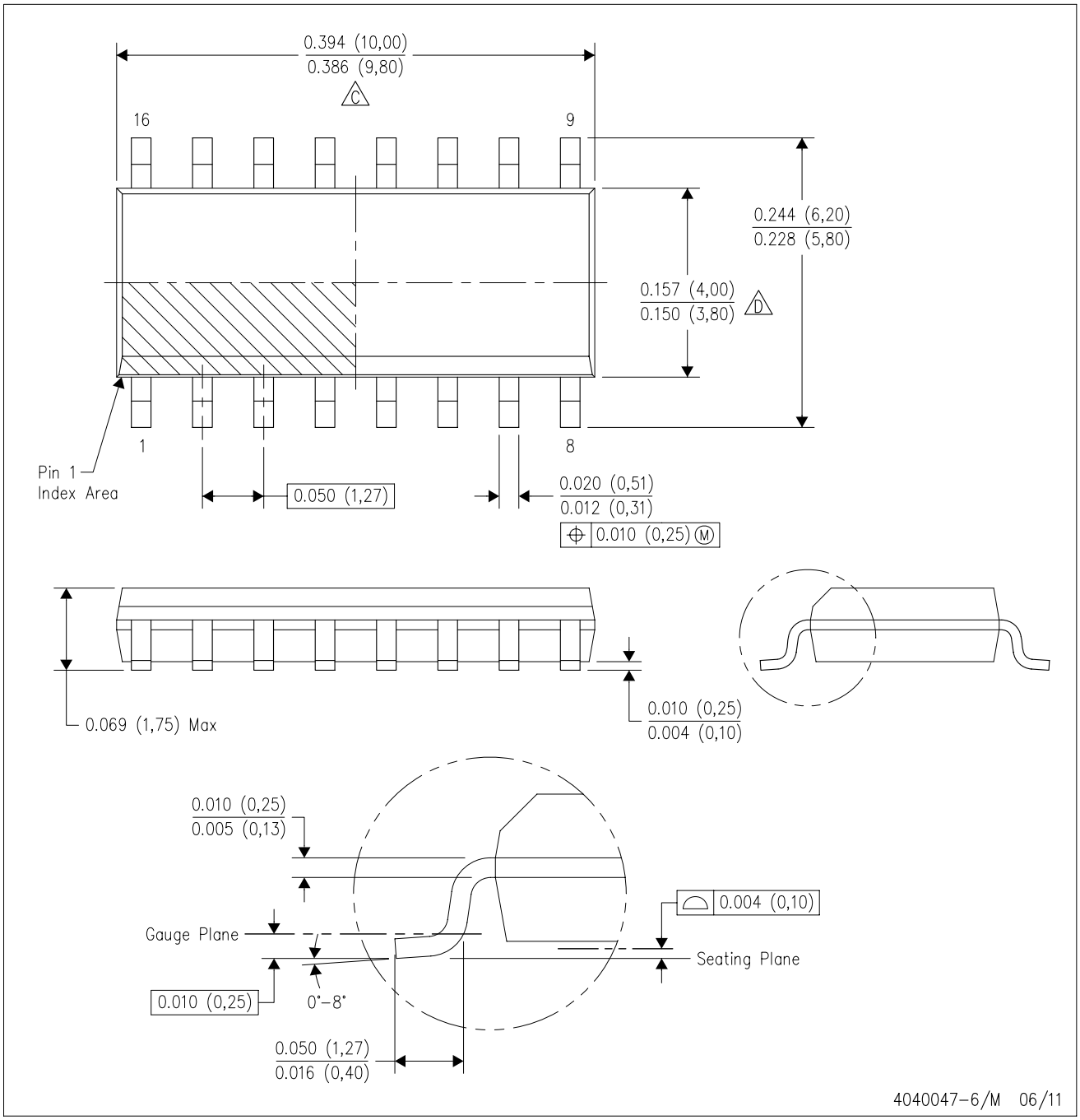

NOTES:
A. All linear dimensions are in inches (millimeters).
B. This drawing is subject to change without notice.
C. Body length does not include mold flash, protrusions, or gate burrs. Mold flash, protrusions, or gate burrs shall not exceed 0.006 (0,15) each side.
D. Body width does not include interlead flash. Interlead flash shall not exceed 0.017 (0,43) each side.
E. Reference JEDEC MS–012 variation AC.

D (R–PDSO–G16) PLASTIC SMALL OUTLINE

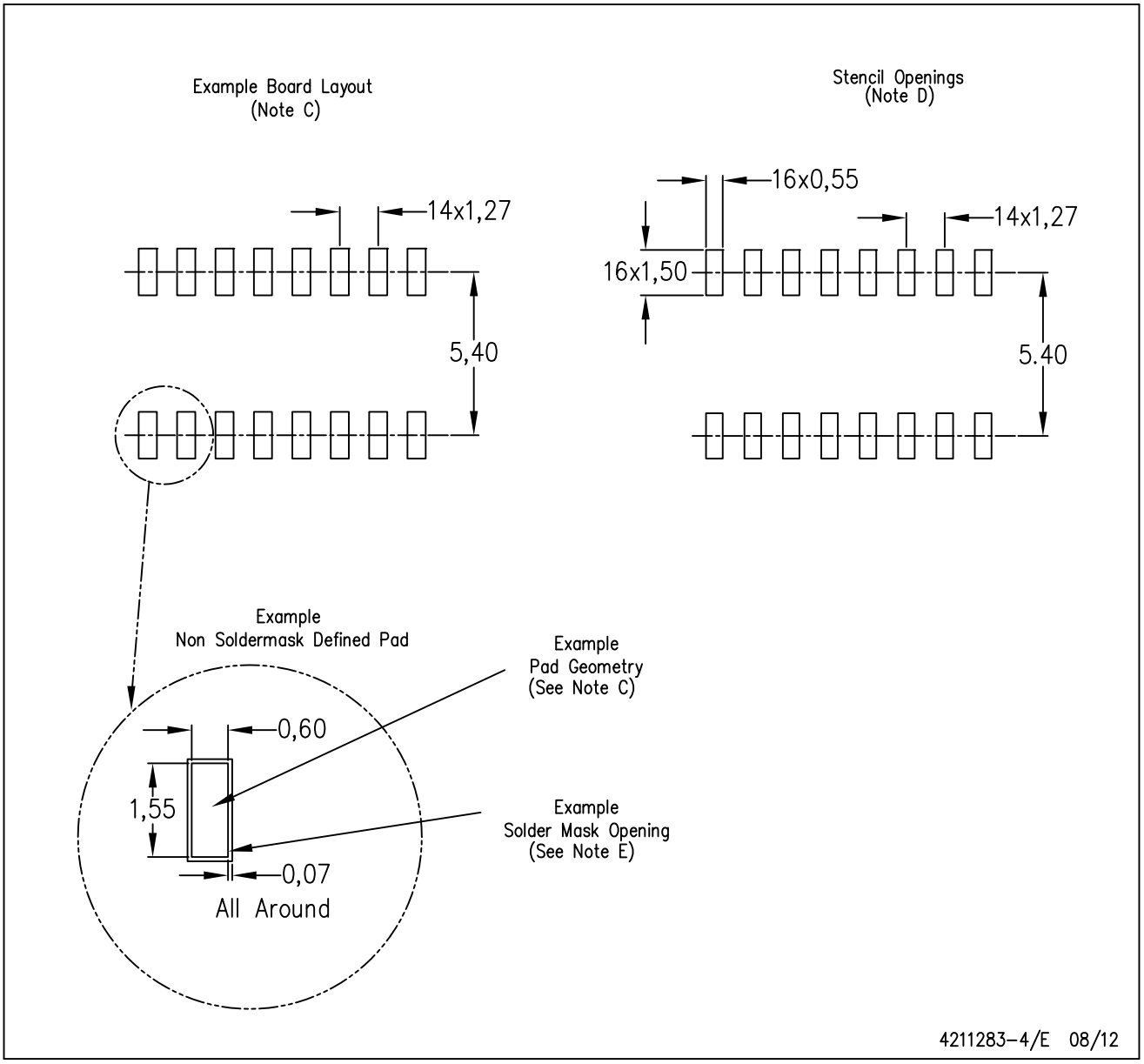

NOTES:
A. All linear dimensions are in millimeters.
B. This drawing is subject to change without notice.
C. Publication IPC–7351 is recommended for alternate designs.
D. Laser cutting apertures with trapezoidal walls and also rounding corners will offer better paste release. Customers should contact their board assembly site for stencil design recommendations. Refer to IPC–7525 for other stencil recommendations.
E. Customers should contact their board fabrication site for solder mask tolerances between and around signal pads.

PW (R–PDSO–G16) PLASTIC SMALL OUTLINE

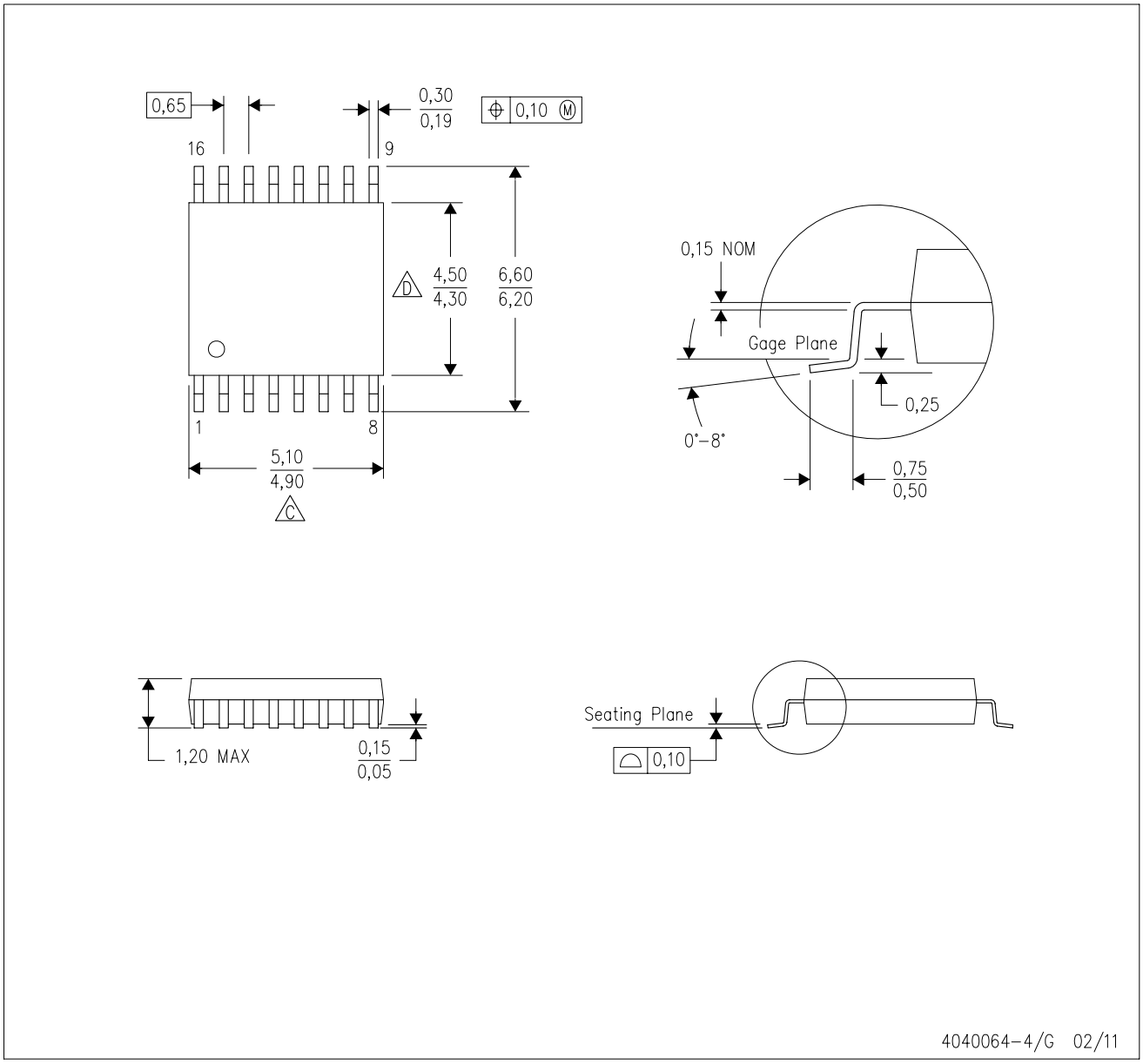

NOTES:
A. All linear dimensions are in millimeters. Dimensioning and tolerancing per ASME Y14.5M–1994.
B. This drawing is subject to change without notice.
C. Body length does not include mold flash, protrusions, or gate burrs. Mold flash, protrusions, or gate burrs shall not exceed 0,15 each side.
D. Body width does not include interlead flash. Interlead flash shall not exceed 0,25 each side.
E. Falls within JEDEC MO–153

PW (R–PDSO–G16) PLASTIC SMALL OUTLINE

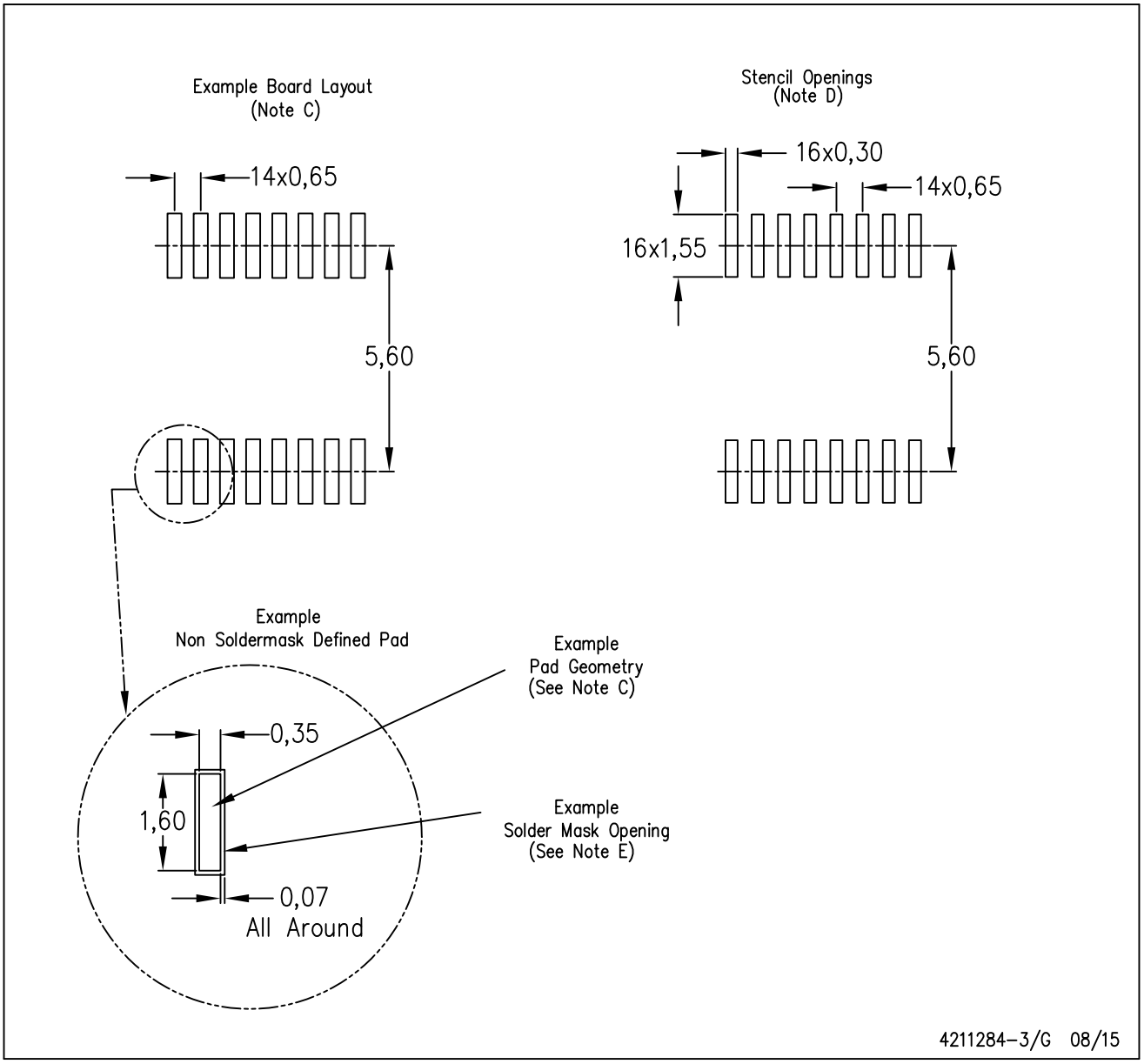

NOTES:
A. All linear dimensions are in millimeters.
B. This drawing is subject to change without notice.
C. Publication IPC–7351 is recommended for alternate designs.
D. Laser cutting apertures with trapezoidal walls and also rounding corners will offer better paste release. Customers should contact their board assembly site for stencil design recommendations. Refer to IPC–7525 for other stencil recommendations.
E. Customers should contact their board fabrication site for solder mask tolerances between and around signal pads.

DB (R-PDSO-G)** **PLASTIC SMALL-OUTLINE**

28 PINS SHOWN

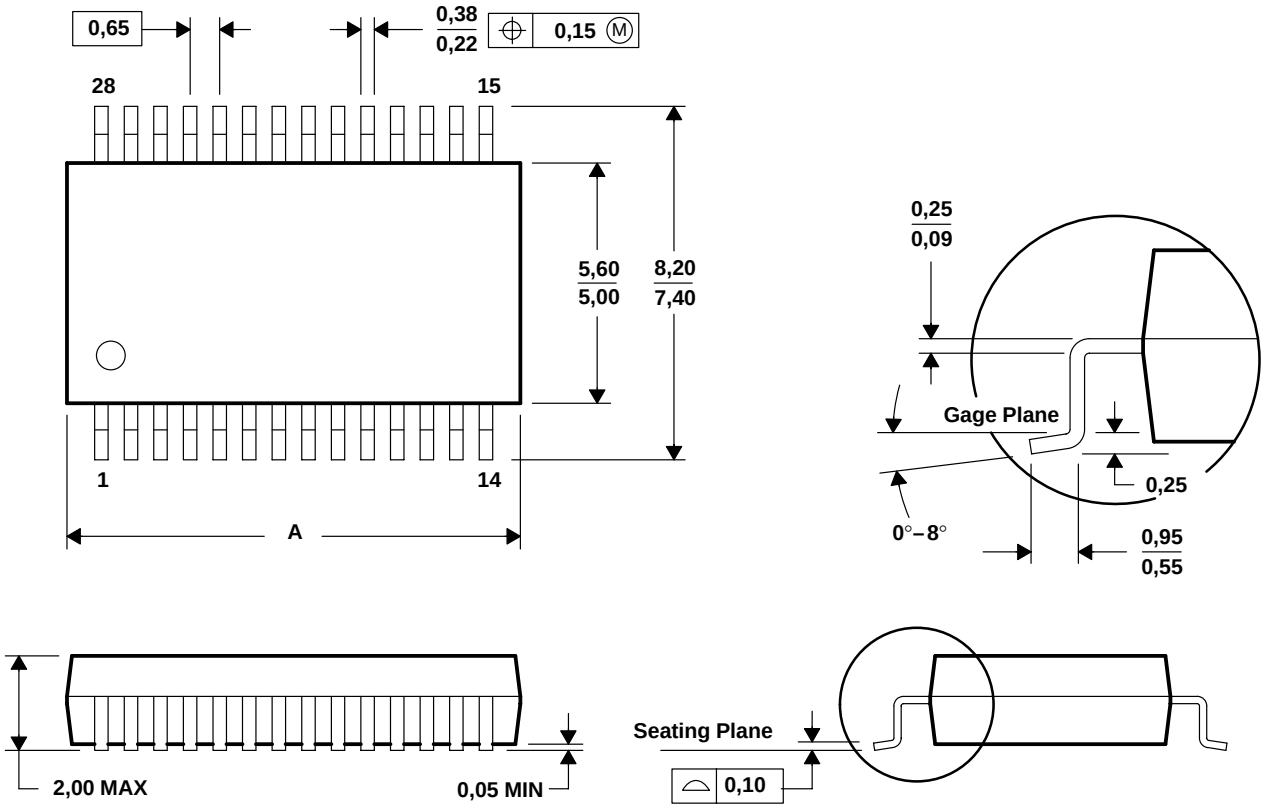

DIM \ PINS **	14	16	20	24	28	30	38
A MAX	6,50	6,50	7,50	8,50	10,50	10,50	12,90
A MIN	5,90	5,90	6,90	7,90	9,90	9,90	12,30

4040065 /E 12/01

NOTES: A. All linear dimensions are in millimeters.
B. This drawing is subject to change without notice.
C. Body dimensions do not include mold flash or protrusion not to exceed 0,15.
D. Falls within JEDEC MO-150

IMPORTANT NOTICE

Texas Instruments Incorporated and its subsidiaries (TI) reserve the right to make corrections, enhancements, improvements and other changes to its semiconductor products and services per JESD46, latest issue, and to discontinue any product or service per JESD48, latest issue. Buyers should obtain the latest relevant information before placing orders and should verify that such information is current and complete. All semiconductor products (also referred to herein as “components”) are sold subject to TI’s terms and conditions of sale supplied at the time of order acknowledgment.

TI warrants performance of its components to the specifications applicable at the time of sale, in accordance with the warranty in TI’s terms and conditions of sale of semiconductor products. Testing and other quality control techniques are used to the extent TI deems necessary to support this warranty. Except where mandated by applicable law, testing of all parameters of each component is not necessarily performed.

TI assumes no liability for applications assistance or the design of Buyers’ products. Buyers are responsible for their products and applications using TI components. To minimize the risks associated with Buyers’ products and applications, Buyers should provide adequate design and operating safeguards.

TI does not warrant or represent that any license, either express or implied, is granted under any patent right, copyright, mask work right, or other intellectual property right relating to any combination, machine, or process in which TI components or services are used. Information published by TI regarding third-party products or services does not constitute a license to use such products or services or a warranty or endorsement thereof. Use of such information may require a license from a third party under the patents or other intellectual property of the third party, or a license from TI under the patents or other intellectual property of TI.

Reproduction of significant portions of TI information in TI data books or data sheets is permissible only if reproduction is without alteration and is accompanied by all associated warranties, conditions, limitations, and notices. TI is not responsible or liable for such altered documentation. Information of third parties may be subject to additional restrictions.

Resale of TI components or services with statements different from or beyond the parameters stated by TI for that component or service voids all express and any implied warranties for the associated TI component or service and is an unfair and deceptive business practice. TI is not responsible or liable for any such statements.

Buyer acknowledges and agrees that it is solely responsible for compliance with all legal, regulatory and safety-related requirements concerning its products, and any use of TI components in its applications, notwithstanding any applications-related information or support that may be provided by TI. Buyer represents and agrees that it has all the necessary expertise to create and implement safeguards which anticipate dangerous consequences of failures, monitor failures and their consequences, lessen the likelihood of failures that might cause harm and take appropriate remedial actions. Buyer will fully indemnify TI and its representatives against any damages arising out of the use of any TI components in safety-critical applications.

In some cases, TI components may be promoted specifically to facilitate safety-related applications. With such components, TI’s goal is to help enable customers to design and create their own end-product solutions that meet applicable functional safety standards and requirements. Nonetheless, such components are subject to these terms.

No TI components are authorized for use in FDA Class III (or similar life-critical medical equipment) unless authorized officers of the parties have executed a special agreement specifically governing such use.

Only those TI components which TI has specifically designated as military grade or “enhanced plastic” are designed and intended for use in military/aerospace applications or environments. Buyer acknowledges and agrees that any military or aerospace use of TI components which have ***not*** been so designated is solely at the Buyer's risk, and that Buyer is solely responsible for compliance with all legal and regulatory requirements in connection with such use.

TI has specifically designated certain components as meeting ISO/TS16949 requirements, mainly for automotive use. In any case of use of non-designated products, TI will not be responsible for any failure to meet ISO/TS16949.

Products		**Applications**	
Audio	www.ti.com/audio	Automotive and Transportation	www.ti.com/automotive
Amplifiers	amplifier.ti.com	Communications and Telecom	www.ti.com/communications
Data Converters	dataconverter.ti.com	Computers and Peripherals	www.ti.com/computers
DLP® Products	www.dlp.com	Consumer Electronics	www.ti.com/consumer-apps
DSP	dsp.ti.com	Energy and Lighting	www.ti.com/energy
Clocks and Timers	www.ti.com/clocks	Industrial	www.ti.com/industrial
Interface	interface.ti.com	Medical	www.ti.com/medical
Logic	logic.ti.com	Security	www.ti.com/security
Power Mgmt	power.ti.com	Space, Avionics and Defense	www.ti.com/space-avionics-defense
Microcontrollers	microcontroller.ti.com	Video and Imaging	www.ti.com/video
RFID	www.ti-rfid.com		
OMAP Applications Processors	www.ti.com/omap	**TI E2E Community**	e2e.ti.com
Wireless Connectivity	www.ti.com/wirelessconnectivity		

Mailing Address: Texas Instruments, Post Office Box 655303, Dallas, Texas 75265
Copyright © 2015, Texas Instruments Incorporated