BatteryManager™

General Description

The AAT3697 BatteryManager is a highly integrated single-cell lithium-ion/polymer battery charger IC designed to operate with AC adapter inputs. It requires a minimum number of external components. The AAT3697 precisely regulates battery charge voltage and current for 4.2V lithium-ion/polymer battery cells. Adapter charge current rates can be programmed up to 2.0A. An active thermal management system regulates the fast charge constant current for all ambient temperature and input vs. output voltage conditions.

Battery temperature and charge state are fully monitored for fault conditions. In the event of an over-voltage or over-temperature failure, the device will automatically shut down, thus protecting the charging device, control system, and the battery under charge. Status monitor output pins are provided to indicate the battery charge status by directly driving two external LEDs. A serial interface output is available to report 12 various charging status states to a microcontroller.

The AAT3697 is available in a Pb-free, thermally-enhanced, space-saving 12-pin TDFN 3x3mm package and is rated over the -40°C to +85°C temperature range.

Features

- Input Voltage Range: 4.0V to 5.5V
- Up to 2.0A Charging Current
- Adapter Present Indicator (ADPP#)
- High Level of Integration with Internal:
  - — Charging Device
  - — Reverse Blocking Diode
  - — Current Sensing
- Active Thermal Loop Charge Reduction
- Automatic Recharge Sequencing
- Battery Temperature Monitoring
- Full Battery Charge Auto Turn-Off / Sleep Mode
- Over-Voltage, Over-Current, and Over-Temperature Protection
- Power On Reset and Soft Start
- Serial Interface Status Report
- 12-Pin 3x3mm TDFN Package
- -40°C to +85°C Temperature Range

Applications

- Cellular Telephones
- Digital Still Cameras
- Hand Held PCs
- MP3 Players
- Personal Data Assistants (PDAs)
- Other Lithium-Ion/Polymer Battery-Powered Devices

Typical Application

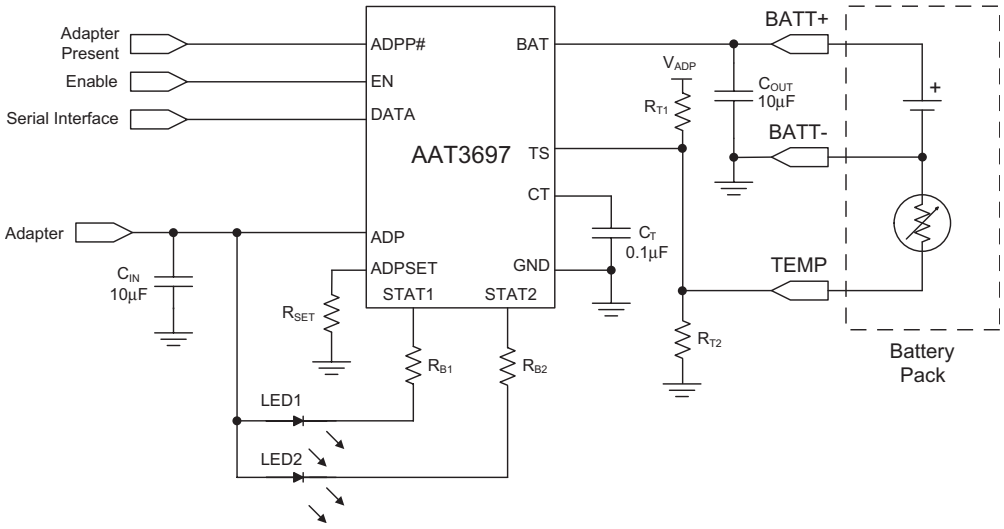

Pin Descriptions

Pin #	Name	Type	Function
1	BAT	Out	Battery charging and sensing.
2	ADP	In	Adapter input.
3	GND	Ground	Ground connection.
4	EN	In	Enable pin. Logic high enables the IC..
5	ADPP#	Out	Adapter present indicator. This pin is open drain until ADP pin reaches threshold.
6	TS	In/Out	Battery temperature sense input.
7	DATA	Out	Status report to microcontroller via serial interface: open drain.
8	STAT2	Out	Battery charge status indicator pin to drive an LED: active low, open drain.
9	STAT1	Out	Battery charge status indicator pin to drive an LED: active low, open drain.
10	CT	In/Out	Timing capacitor to adjust internal watchdog timer. Set maximum charge time for adapter powered trickle, CC, and CV charge modes. If timing function is not needed, terminate this pin to ground.
11	N/C		No connection.
12	ADPSET	In/Out	Use resistor at this pin to set adapter charging current.
EP			Exposed paddle (bottom); connect to GND directly beneath package.

Pin Configuration

TDFN33-12
(Top View)

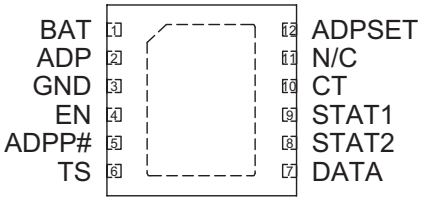

Absolute Maximum Ratings[1]

Symbol	Description	Value	Units
V_P	ADP Input Voltage, <30ms, Duty Cycle <10%	-0.3 to 7.0	V
V_P	ADP Input Voltage, Continuous	-0.3 to 6.0	V
V_N	BAT, TS, ADPSET, ADPP#, DATA, CT, EN, STAT1, STAT2	-0.3 to V_P + 0.3	V
T_J	Operating Junction Temperature Range	-40 to 150	°C
T_{LEAD}	Maximum Soldering Temperature (at leads)	300	°C

Thermal Information

Symbol	Description	Value	Units
θ_{JA}	Maximum Thermal Resistance[2]	50	°C/W
P_D	Maximum Power Dissipation	2.0	W

1. Stresses above those listed in Absolute Maximum Ratings may cause permanent damage to the device. Functional operation at conditions other than the operating conditions specified is not implied. Only one Absolute Maximum Rating should be applied at any one time.
2. Mounted on an FR4 board.

Electrical Characteristics[1]

V_{ADP} = 5V, T_A = -40°C to +85°C, unless otherwise noted. Typical values are at T_A = 25°C.

Symbol	Description	Conditions	Min	Typ	Max	Units
Operation						
ADP	Adapter Voltage Range		4.0		5.5	V
V_{ADPP}	Adapter Present Threshold Voltage			3.0		V
V_{UVLO}	Under-Voltage Lockout (UVLO)	Rising Edge		3.0		V
	UVLO Hysteresis			150		mV
I_{OP}	Operating Current	Charge Current = 100mA		0.3	1.5	mA
I_{SLEEP}	Sleep Mode Current	V_{BAT} = 4.25V		0.3	1.0	µA
$I_{Leakage}$	Reverse Leakage Current from BAT Pin	V_{BAT} = 4V, ADP Pin Open		1.0		µA
Voltage Regulation						
V_{BAT_EOC}[1]	End of Charge Voltage Accuracy		4.158	4.20	4.242	V
$\Delta V_{CH}/V_{CH}$	Output Charge Voltage Tolerance			0.5		%
V_{MIN}	Preconditioning Voltage Threshold		2.8	3.0	3.15	V
V_{RCH}	Battery Recharge Voltage Threshold			V_{BAT_EOC} - 0.1		V
Current Regulation						
I_{CH}	Charge Current		100		2000	mA
$\Delta I_{CH}/I_{CH}$	Charge Current Regulation Tolerance			10		%
V_{ADPSET}	ADPSET Pin Voltage	CC Mode		2.0		V
K_{IA}	Current Set Factor: I_{CH}/I_{ADPSET}			4000		
Charging Devices						
$R_{DS(ON)}$	Adapter Charging Transistor On Resistance	V_{IN} = 5.5V	0.2	0.25	0.35	Ω

1. The AAT3697 output charge voltage is specified over the 0° to 70°C ambient temperature range; operation over the -40°C to +85°C temperature range is guaranteed by design.

Electrical Characteristics[1]

V_{ADP} = 5V, T_A = -40°C to +85°C, unless otherwise noted. Typical values are at T_A = 25°C.

Symbol	Description	Conditions	Min	Typ	Max	Units
Logic Control / Protection						
$V_{EN(H)}$	Input High Threshold		1.6			V
$V_{EN(L)}$	Input Low Threshold				0.4	V
$V_{ADPP\#}$	Output Low Voltage	ADPP# Pin Sinks 500µA			0.4	V
T_C	Preconditioning Plus Constant Current Mode Time Out	C_{CT} = 100nF, V_{ADP} = 5.5V		3.0		Hour
T_P	Preconditioning Time Out	C_{CT} = 100nF, V_{ADP} = 5.5V		25		Minute
T_V	Constant Voltage Mode Time Out	C_{CT} = 100nF, V_{ADP} = 5.5V		3.0		Hour
V_{STAT}	Output Low Voltage	STAT Pin Sinks 4mA			0.4	V
I_{STAT}	STAT Pin Current Sink Capability			8.0		mA
V_{OVP}	Over-Voltage Protection Threshold			4.4		V
I_{TK}/I_{CH}	Pre-Charge Current			10		%
I_{TERM}/I_{CH}	Charge Termination Threshold Current			7.5		%
V_{TS1}	High Temperature Threshold	V_{ADP} = 5.5V	29.1	30	30.9	$\%V_{ADP}$
V_{TS2}	Low Temperature Threshold	V_{ADP} = 5.5V	58.2	60	61.8	$\%V_{ADP}$
I_{DATA}	DATA Pin Sink Current	DATA Pin is Active Low State	3			mA
$I_{ADPP\#}$	ADPP# Current Sink	ADPP# Pin is Active Low State		8		mA
$V_{DATA(H)}$	Input High Threshold		1.6			V
$V_{DATA(L)}$	Input Low Threshold				0.4	V
SQ_{PULSE}	Status Request Pulse Width	Status Request	200			ns
t_{PERIOD}	System Clock Period			50		µs
f_{DATA}	Data Output Frequency			20		kHz
T_{REG}	Thermal Loop Regulation			90		°C
T_{LOOP_IN}	Thermal Loop Entering Threshold			110		°C
T_{LOOP_OUT}	Thermal Loop Exiting Threshold			85		°C
T_{OVSD}	Over-Temperature Shutdown Threshold			145		°C

1. The AAT3697 output charge voltage is specified over the 0° to 70°C ambient temperature range; operation over the -40°C to +85°C temperature range is guaranteed by design.

Typical Characteristics

Charge Current vs. R_{SET}

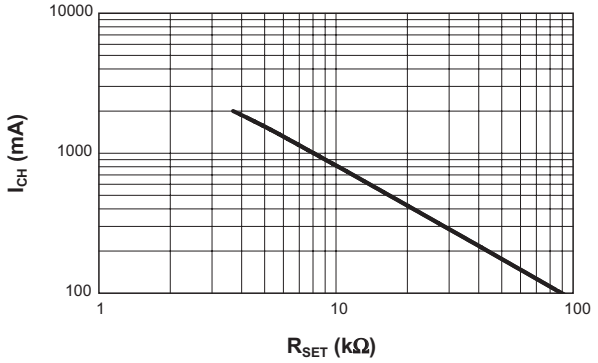

Battery Voltage vs. Supply Voltage

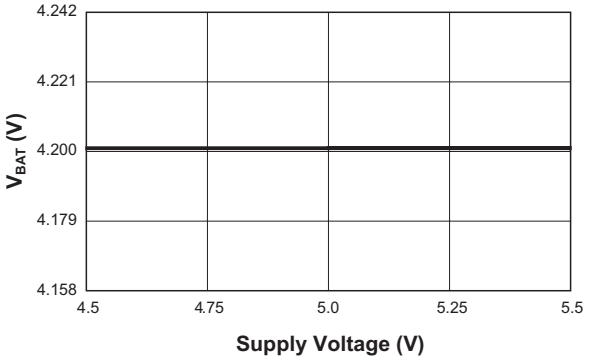

End of Charge Voltage Regulation vs. Temperature

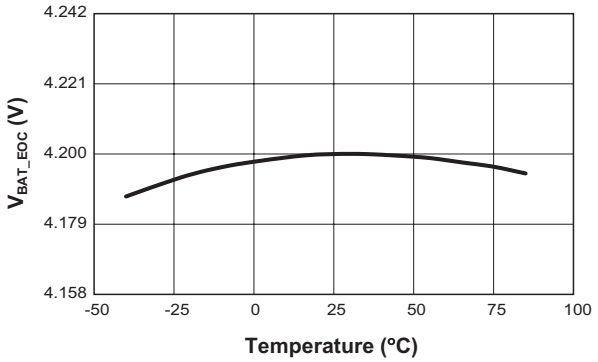

Preconditioning Threshold Voltage vs. Temperature

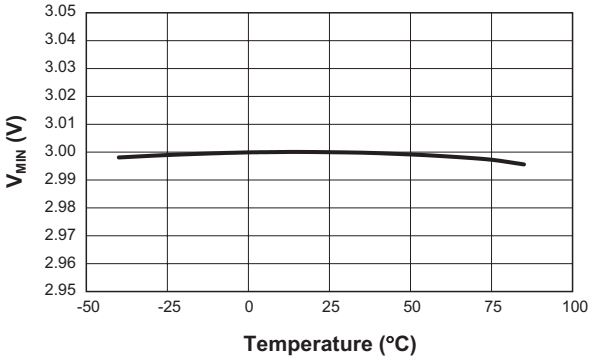

Pre-Charge Current vs. Temperature
(ADPSET = 8.06kΩ)

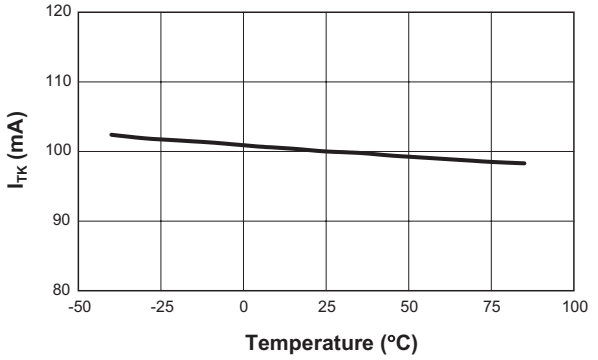

Charge Current vs. Temperature
(ADPSET = 8.06kΩ)

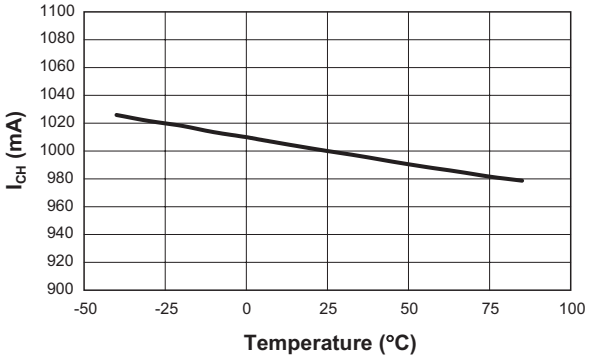

Typical Characteristics

Charge Current vs. Battery Voltage
(ADPSET = 8.06kΩ; V_{IN} = 5.0V)

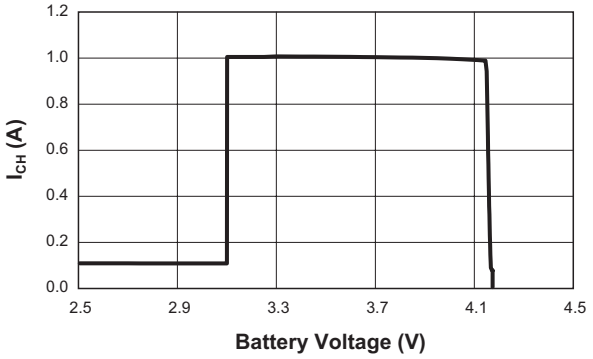

Charge Current vs. Supply Voltage
(ADPSET = 8.06kΩ)

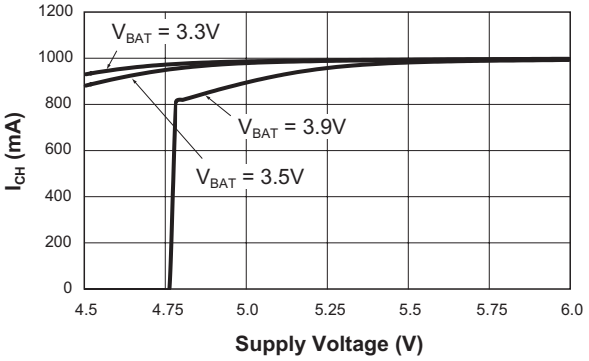

V_{IH} vs. Supply Voltage
EN Pin (Rising)

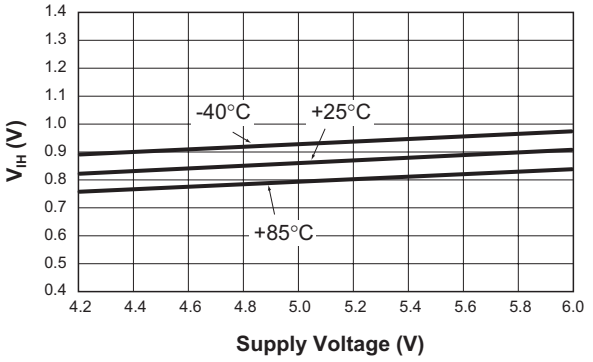

V_{IL} vs. Supply Voltage
EN Pin (Falling)

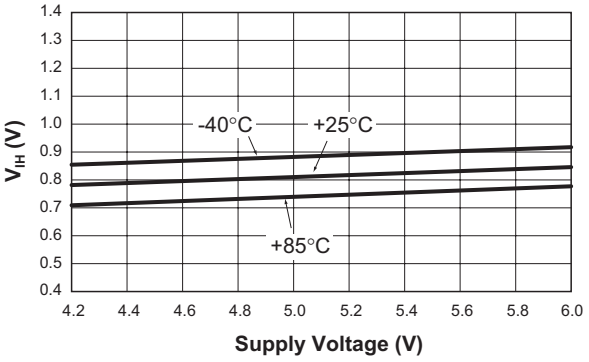

Operating Current vs. ADPSET Resistor

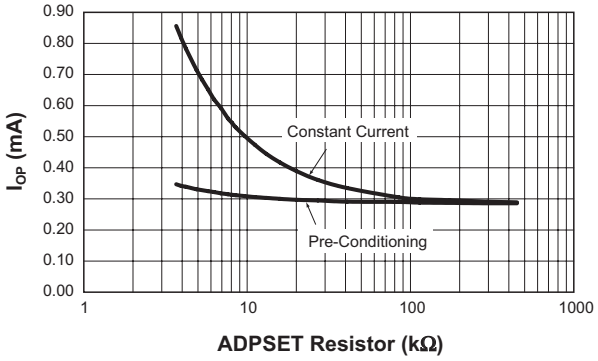

Counter Timeout vs. Temperature
(C_T = 0.1µF)

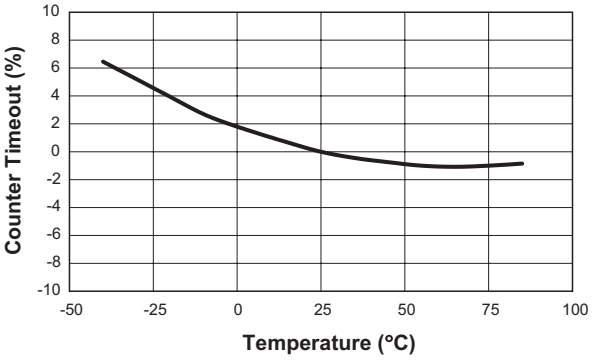

Typical Characteristics

CT Pin Capacitance vs. Counter Timeout

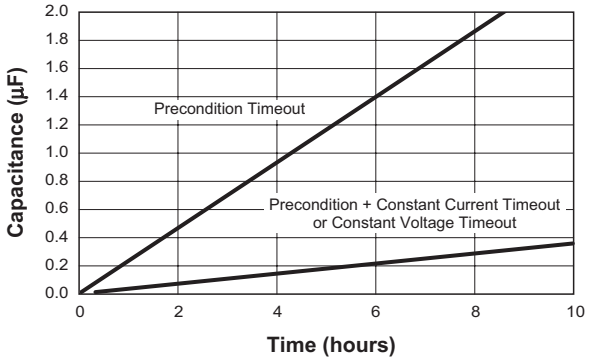

High and Low Temperature Threshold vs. Temperature

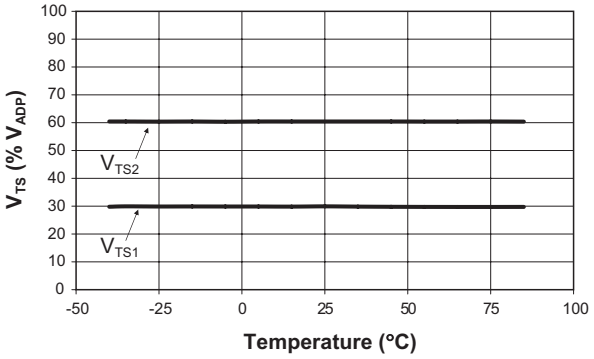

Functional Block Diagram

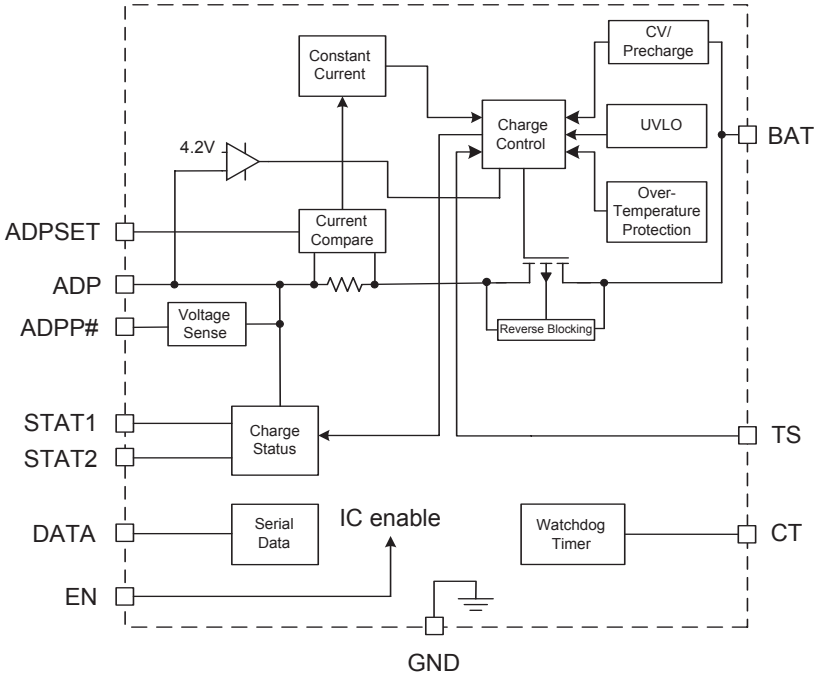

Functional Description

The AAT3697 is a highly integrated single-cell lithium-ion/polymer battery charger IC designed to operate with standard AC adapter input sources, while requiring a minimum number of external components. The AAT3697 precisely regulates battery charge voltage and current for 4.2V lithium-ion/polymer battery cells.

The adapter charge input constant current level can be programmed up to 2.0A for rapid charging applications. The AAT3697 is rated for operation from -40°C to +85°C. In the event of operating ambient temperatures exceeding the power dissipation abilities of the device package for a given constant current charge level, the charge control will enter into thermal regulation. When the system thermal regulation becomes active, the programmed constant current charge amplitude will be automatically reduced to a safe level for the current operating condition. Should the ambient operating temperature drop below the thermal loop threshold, the system will automatically resume charging at the full programmed constant current level. This intelligent thermal management system permits the AAT3697 to operate and safely charge a battery cell over a wide range of ambient conditions while maximizing the greatest possible charge current for the given set of conditions.

Status monitor output pins are provided to indicate the battery charge state by directly driving two external LEDs. A serial interface output is also available to report any one of 12 distinct charge states to the system microcontroller.

Battery temperature and charge state are fully monitored for fault conditions. In the event of an over-voltage or over-temperature failure, the device will automatically shut down, thus protecting the charging device, control system, and the battery under charge. In addition to internal charge controller thermal protection, the AAT3697 also provides a temperature sense feedback function (TS pin) from the battery to shut down the device in the event the battery exceeds its own thermal limit during charging. All fault events are reported to the user either by the simple status LEDs or via the DATA pin function.

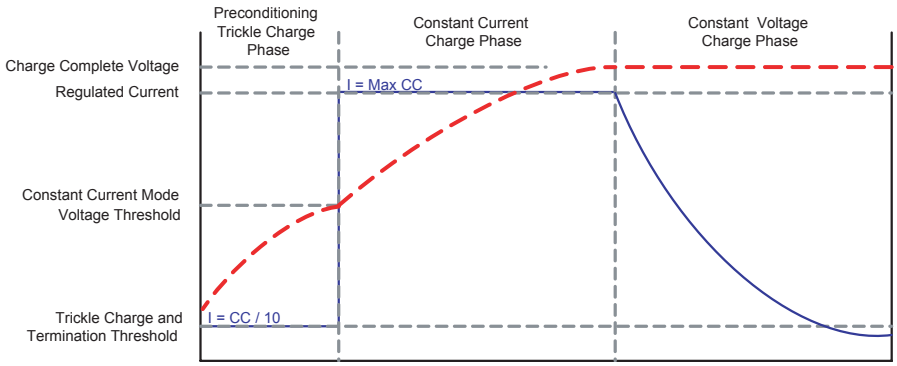

Figure 1: Current vs. Voltage Profile During Charging Phases.

Charging Operation

The AAT3697 has four basic modes for the battery charge cycle: pre-conditioning / trickle charge; constant current / fast charge; constant voltage; and end of charge (see Figure 1).

Battery Preconditioning

Before the start of charging, the AAT3697 checks several conditions in order to assure a safe charging environment. The input supply must be above the minimum operating voltage, or under-voltage lockout threshold (V_{UVLO}), for the charging sequence to begin. Also, the cell temperature, as reported by a thermistor connected to the TS pin from the battery, must be within the proper window for safe charging. When these conditions have been met and a battery is connected to the BAT pin, the AAT3697 checks the state of the battery. If the cell voltage is below the preconditioning voltage threshold (V_{MIN}), the charge control begins preconditioning the cell.

The battery preconditioning trickle charge current is equal to the fast charge constant current divided by 10. For example, if the programmed fast charge current is 1.5A, then the preconditioning mode (trickle charge) current will be 150mA. Cell preconditioning is a safety precaution for deeply discharged battery cells and also aids in limiting power dissipation in the pass transistor when the voltage across the device is at the greatest potential.

Fast Charge / Constant Current Charging

Battery cell preconditioning continues until the voltage on the BAT pin exceeds the preconditioning voltage threshold (V_{MIN}). At this point, the AAT3697 begins the constant current fast charging phase. The fast charge constant current (I_{CH}) amplitude is programmed by the user via the R_{SET} resistor. The AAT3697 remains in the constant current charge mode until the battery reaches the voltage regulation point, V_{BAT_EOC}.

Constant Voltage Charging

The system transitions to a constant voltage charging mode when the battery voltage reaches the output charge regulation threshold (V_{BAT_EOC}) during the constant current fast charge phase. The regulation voltage level is factory programmed to 4.2V (±1%). Charge current in the constant voltage mode drops as the battery cell under charge reaches its maximum capacity.

End of Charge Cycle Termination and Recharge Sequence

When the charge current drops to 7.5% of the programmed fast charge current level in the constant voltage mode, the device terminates charging and goes into a sleep state. The charger will remain in a sleep state until the battery voltage decreases to a level below the battery recharge voltage threshold (V_{RCH}).

When the input supply is disconnected, the charger will automatically transition into a power-saving sleep mode. Only consuming an ultra-low 0.3µA in sleep mode, the AAT3697 minimizes battery drain when it is not charging. This feature is particularly useful in applications where the input supply level may fall below the battery charge or under-voltage lockout level. In such cases where the AAT3697 input voltage drops, the device will enter sleep mode and automatically resume charging once the input supply has recovered from the fault condition.

System Operation Flow Chart

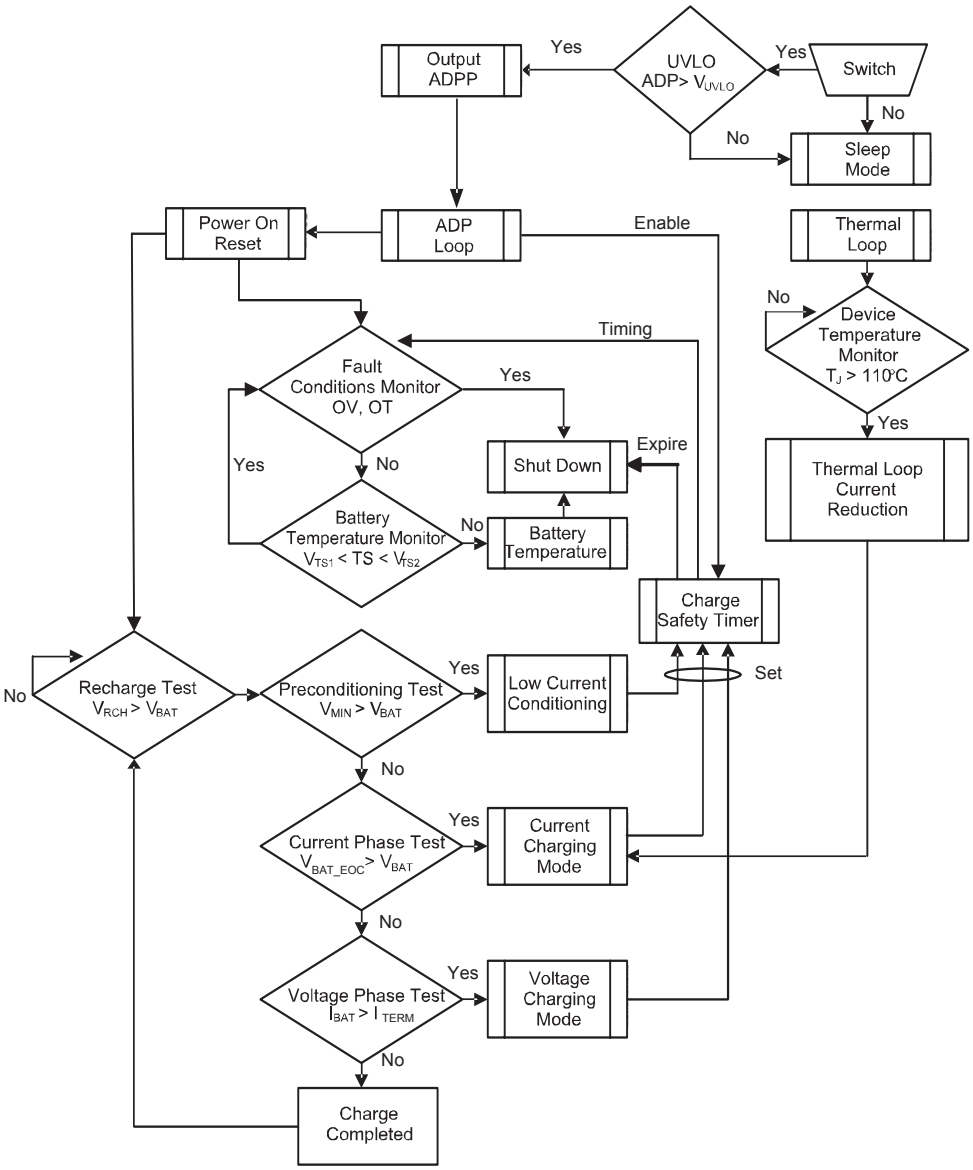

Application Information

Adapter Power Input

Constant current charge levels up to 2.0A may be programmed by the user when powered from a sufficient input power source. The AAT3697 will operate from the adapter input over a 4.0V to 5.5V range.

The constant current fast charge current for the adapter input is set by the R_{SET} resistor connected between the ADPSET pin and ground. Refer to Table 1 for recommended R_{SET} values for a desired constant current charge level. The presence of voltage on the adapter input is indicated by the ADPP# pin function. This indicator pin uses an internal open drain device that will pull the ADPP# pin low when voltage is detected on the ADP pin. The precise

charging function of the AAT3697 may be read from the DATA pin and/or status LEDs. Please refer to the Battery Charge Status Indication discussion for further details on data reporting.

Thermal Loop Control

Due to the integrated nature of the linear charging control pass device for the adapter input, a special thermal loop control system has been employed to maximize charging current under all operating conditions. The thermal management system measures the internal circuit die temperature and reduces the fast charge current when the device exceeds a preset internal temperature control threshold. Once the thermal loop control becomes active, the fast charge current is initially reduced by a factor of 0.44.

The initial thermal loop current can be estimated by the following equation:

Eq. 1: $I_{TLOOP} = I_{CH} \cdot 0.44$

The thermal loop control re-evaluates the circuit die temperature in 330ms intervals and adjusts the fast charge current back up in small steps to the full fast charge current level or until an equilibrium current is discovered and maximized for the given ambient temperature condition. The thermal loop controls the system charge level; therefore, the AAT3697 will always provide the highest level of constant current in the fast charge mode possible for any given ambient temperature condition.

Adapter Input Charge Inhibit and Resume

The AAT3697 has a UVLO and power on reset feature so that the charger will suspend charging and shut down if the input supply to the adapter pin drops below the UVLO threshold. When power is re-applied to the adapter pin or the UVLO conditions recovers, the system charge control will assess the state of charge on the battery cell and will automatically resume charging in the appropriate mode for the condition of the battery.

Enable / Disable

The AAT3697 provides an enable function to control the charger IC on and off. The enable (EN) pin is active high. When pulled to a logic low level, the AAT3697 will be shut down and forced into the sleep state. Charging will be halted regardless of the battery voltage or charging state. When the device is re-enabled, the charge control circuit will automatically reset and resume charging functions with the appropriate charging mode based on the battery charge state and measured cell voltage on the BAT pin.

Programming Charge Current

The fast charge constant current charge level is user programmed with a set resistor placed between the ADPSET pin and ground. The accuracy of the fast charge, as well as the preconditioning trickle charge current, is dominated by the tolerance of the set resistor used. For this reason, a 1% tolerance metal film resistor is recommended for the set resistor function.

Fast charge constant current levels from 50mA to 2.0A can be set by selecting the appropriate resistor value from Table 1.

I_{CH} (mA)	R_{SET} (kΩ)	I_{CH} (mA)	R_{SET} (kΩ)
100	84.5	1100	7.32
200	43.2	1200	6.65
300	28.0	1300	6.04
400	21.0	1400	5.62
500	16.9	1500	5.36
600	13.3	1600	4.87
700	11.5	1700	4.53
800	10.2	1800	4.22
900	90.9	1900	3.92
1000	8.06	2000	3.65

Table 1: Recommended R_{SET} Values.

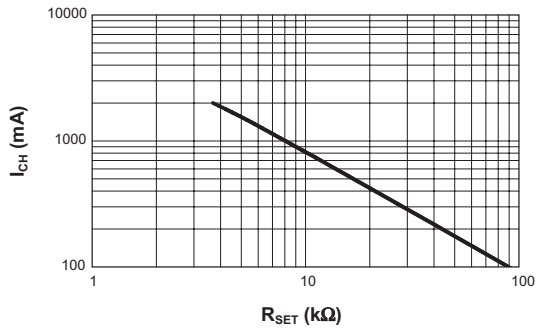

Figure 2: I_{CH} vs. R_{SET}.

Protection Circuitry

Programmable Watchdog Timer

The AAT3697 contains a watchdog timing circuit to shut down charging functions in the event of a defective battery cell not accepting a charge over a preset period of time. Typically, a 0.1µF ceramic capacitor is connected between the CT pin and ground. When a 0.1µF ceramic capacitor is used, the device will time out a shutdown condition if the trickle charge mode exceeds 25 minutes and a combined trickle charge plus fast charge mode of 3 hours. When the device transitions to the constant voltage mode, the timing counter is reset and will time out after an additional 3 hours if the charge current does not drop to the charge termination level.

Mode	Time
Trickle Charge (TC) Time Out	25 minutes
Trickle Charge (TC) + Fast Charge (CC) Time Out	3 hours
Constant Voltage (VC) Mode Time Out	3 hours

Table 2: Summary for a 0.1µF Ceramic Capacitor Used for the Timing Capacitor.

The CT pin is driven by a constant current source and will provide a linear response to increases in the timing capacitor value. Thus, if the timing capacitor were to be doubled from the nominal 0.1µF value, the time-out periods would be doubled.

If the programmable watchdog timer function is not needed, it can be disabled by terminating the CT pin to ground. The CT pin should not be left floating or un-terminated, as this will cause errors in the internal timing control circuit.

The constant current provided to charge the timing capacitor is very small, and this pin is susceptible to noise and changes in capacitance value. Therefore, the timing capacitor should be physically located on the printed circuit board layout as close as possible to the CT pin. Since the accuracy of the internal timer is dominated by the capacitance value, a 10% tolerance or better ceramic capacitor is recommended. Ceramic capacitor materials, such as X7R and X5R types, are a good choice for this application.

Over-Voltage Protection

An over-voltage event is defined as a condition where the voltage on the BAT pin exceeds the maximum battery charge voltage and is set by the over-voltage protection threshold (V_{OVP}). If an over-voltage condition occurs, the AAT3697 charge control will shut down the device until the voltage on the BAT pin drops below V_{OVP}. The AAT3697 will resume normal charging operation after the over-voltage condition is removed. During an over-voltage event, the STAT LEDs will report a system fault, and the actual fault condition can be read via the DATA pin signal.

Over-Temperature Shutdown

The AAT3697 has a thermal protection control circuit which will shut down charging functions should the internal die temperature exceed the preset thermal limit threshold.

Battery Temperature Fault Monitoring

In the event of a battery over-temperature condition, the charge control will turn off the internal pass device and report a battery temperature fault on the DATA pin function. The STAT LEDs will also display a system fault. After the system recovers from a temperature fault, the device will resume charging operation.

The AAT3697 checks battery temperature before starting the charge cycle, as well as during all stages of charging. This is accomplished by monitoring the voltage at the TS pin. Either a negative temperature coefficient thermistor (NTC) or positive temperature coefficient thermistor (PTC) can be used because the AAT3697 checks to see that the voltage at TS is within a voltage window bounded by V_{TS1} and V_{TS2}. Please see the equations below for specifying resistors:

R_{T1} and R_{T2} for use with **NTC** Thermistor

Eq. 2: $$R_{T1} = \frac{5 \cdot R_{TH} \cdot R_{TC}}{3 \cdot (R_{TC} - R_{TH})}$$

$$R_{T2} = \frac{5 \cdot R_{TH} \cdot R_{TC}}{(2 \cdot R_{TC}) - (7 \cdot R_{TH})}$$

R_{T1} and R_{T2} for use with **PTC** Thermistor

$$\textbf{Eq. 3:}\quad R_{T1} = \frac{5 \cdot R_{TH} \cdot R_{TC}}{3 \cdot (R_{TH} - R_{TC})}$$

$$R_{T2} = \frac{5 \cdot R_{TH} \cdot R_{TC}}{(2 \cdot R_{TH}) - (7 \cdot R_{TC})}$$

Where R_{TC} is the thermistor's cold temperature resistance and R_{TH} is the thermistor's hot temperature resistance. See thermistor specifications for information. To ensure there is no dependence on the input supply changes, connect the divider between V_{ADP} and GND. Disabling the temperature-monitoring function is achieved by applying a voltage between V_{TS1} and V_{TS2} on the TS pin.

Battery Charge Status Indication

The AAT3697 indicates the status of the battery under charge with two different systems. First, the device has two status LED driver outputs. These two LEDs can indicate simple functions such as no battery charge activity, battery charging, charge complete, and charge fault. The AAT3697 also provides a bi-directional data reporting function so that a system microcontroller can interrogate the DATA pin and read any one of 12 system states.

Status Indicator Display

Simple system charging status states can be displayed using one or two LEDs in conjunction with the STAT1 and STAT2 pins on the AAT3697. These two pins are simple open drain switches used to connect the LED cathodes to ground. It is not necessary to use both display LEDs if a user simply wants to have a single lamp to show "charging" or "not charging."

This can be accomplished by using the STAT1 pin and a single LED. Using two LEDs and both STAT pins simply gives the user more information to the charging states. Refer to Table 3 for LED display definitions. The LED anodes should be connected to V_{ADP}.

The LEDs should be biased with as little current as necessary to create reasonable illumination; therefore, a ballast resistor should be placed between the LED cathodes and the STAT1/2 pins. LED current consumption will add to the overall thermal power budget for the device package, hence it is good to keep the LED drive current to a minimum. 2mA should be sufficient to drive most low-cost green or red LEDs. It is not recommended to exceed 8mA for driving an individual status LED.

The required ballast resistor values can be estimated using the following formulas:

$$\textbf{Eq. 4:}\quad R_{B(STAT1/2)} = \frac{(V_{ADP} - V_{F(LED)})}{I_{LED(STAT1/2)}}$$

Example:

$$\textbf{Eq. 5:}\quad R_{B(STAT1)} = \frac{(5.5V - 2.0V)}{2mA} = 1.75k\Omega$$

Note: Red LED forward voltage (V_F) is typically 2.0V @ 2mA

Event Description	STAT1	STAT2
Charge Disabled or Low Supply	Off	Off
Charge Enabled Without Battery	Flash[1]	Flash[1]
Battery Charging	On	Off
Charge Completed	Off	On
Fault	On	On

Table 3: LED Status Indicator.

1. Flashing rate depends on output capacitance.

Digital Charge Status Reporting

The AAT3697 has a comprehensive digital data reporting system by use of the DATA pin feature. This function can provide detailed information regarding the status of the charging system. The DATA pin is a bi-directional port which will read back a series of data pulses when the system microcontroller asserts a request pulse. This single strobe request protocol will invoke one of 12 possible return pulse counts that the system microcontroller can look up based on the serial report data listed in Table 4.

The DATA pin function logic is active low and should normally be pulled high to V_{ADP}. This data line can also be pulled high to the same level as the high state for the logic I/O port on the system microcontroller. In order for the DATA pin control circuit to generate clean, sharp edges for the data output, and to maintain the integrity of the data timing for the system, the pull-up resistor on the data line should be low enough in value so that the DATA signal returns to the high state without delay. If the pull-up resistor is too high, the strobe pulse from the system microcontroller could exceed the maximum pulse time and the DATA output control could issue false status reports. A 1.5kΩ resistor is recommended when pulling the DATA pin high to 5.0V on the V_{ADP} input. If the data line is pulled high to a voltage level less than 5.0V, the pull-up resistor can be calculated based on a recommended minimum pull-up current of 3mA. Use the following formula:

Eq. 6: $$R_{PULL\text{-}UP} \leq \frac{V_{PULL\text{-}UP}}{3mA}$$

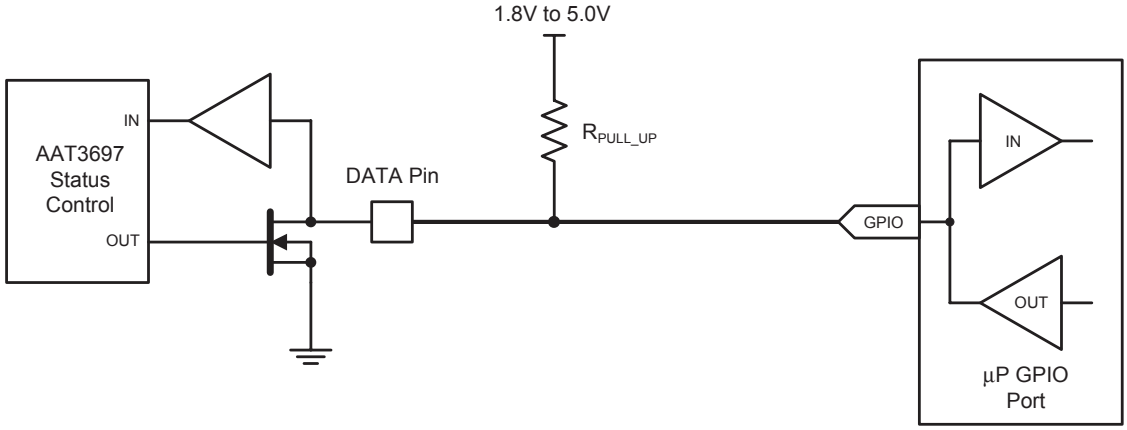

Figure 3: Data Pin Application Circuit.

Data Timing

The system microcontroller should assert an active low data request pulse for minimum duration of 200ns; this is specified by $T_{LO(DATA)}$. Upon sensing the rising edge of the end of the data request pulse, the AAT3697 status data control will reply the data word back to the system microcontroller after a delay specified by the data report time specification $T_{DATA(RPT)}$. The period of the following group of data pulses will be specified by T_{DATA}.

Timing Diagram

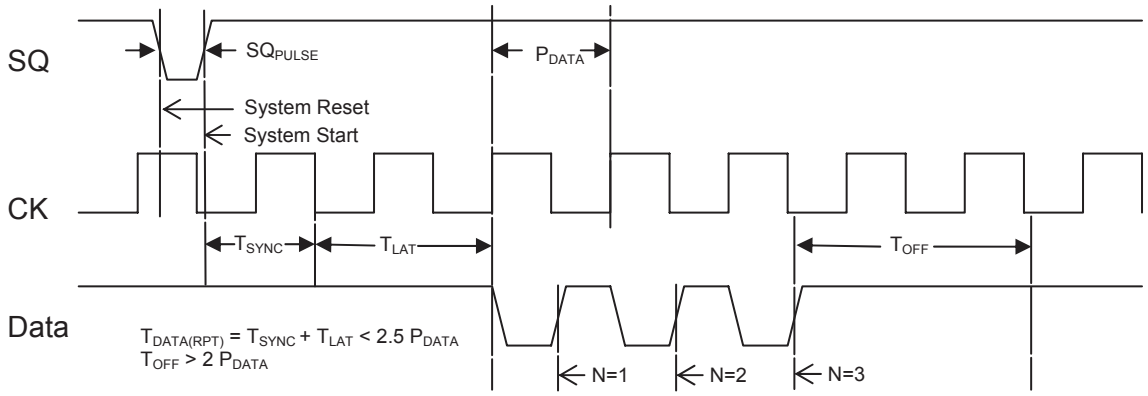

N	DATA Report Status
1	Chip Over-Temperature Shutdown.
2	Battery Temperature Fault.
3	Over-Voltage Turn Off.
4	Not Used.
5	ADP Watchdog Time-Out in Battery Condition Mode.
6	ADP Battery Condition Mode.
7	ADP Watchdog Time-Out in Constant Current Mode.
8	ADP Thermal Loop Regulation in Constant Current Mode.
9	ADP Constant Current Mode.
10	ADP Watchdog Time-Out in Constant Voltage Mode.
11	ADP Constant Voltage Mode.
12	ADP End of Charging.
23	Data Report Error.

Table 4: Serial Data Report Table.

Thermal Considerations

The AAT3697 is offered in a 3x3mm TDFN package which can provide up to 2.0W of power dissipation when it is properly bonded to a printed circuit board and has a maximum thermal resistance of 50°C/W. Many considerations should be taken into account when designing the printed circuit board layout, as well as the placement of the charger IC package in proximity to other heat generating devices in a given application design. The ambient temperature around the charger IC will also have an effect on the thermal limits of a battery charging application. The maximum limits that can be expected for a given ambient condition can be estimated by the following discussion.

First, the maximum power dissipation for a given situation should be calculated:

Eq. 7: $P_D = [(V_{IN} - V_{BAT}) \cdot I_{CC} + (V_{IN} \cdot I_{OP})]$

Where:

P_D = Total Power Dissipation by the Device

V_{IN} = Input Voltage Amplitude, V_{ADP}

V_{BAT} = Battery Voltage as Seen at the BAT Pin

I_{CC} = Maximum Constant Fast Charge Current Programmed for the Application

I_{OP} = Quiescent Current Consumed by the Charger IC for Normal Operation

Next, the maximum operating ambient temperature for a given application can be estimated based on the thermal resistance of the 3x3mm TDFN package when sufficiently mounted to a PCB layout and the internal thermal loop temperature threshold.

Eq. 8: $T_A = T_J - (\theta_{JA} \cdot P_D)$

Where:

T_A = Ambient Temperature in °C

T_J = Maximum Device Junction Temperature Below the Thermal Loop Threshold

P_D = Total Power Dissipation by the Device

θ_{JA} = Package Thermal Resistance in °C/W

Example:

For an application where the fast charge current for the adapter mode is set to 1A, V_{ADP} = 5.0V and the battery voltage at 3.6V, what is the maximum ambient temperature at which the thermal loop will become active?

Given:

V_{ADP} = 5.0V

V_{BAT} = 3.6V

I_{CC} = 1A

I_{OP} = 0.75mA

T_J = 110°C

θ_{JA} = 50°C/W

Using Equation 7, calculate the device power dissipation for the stated condition:

Eq. 9: $P_D = (5.0V - 3.6V)(1A) + (5.0V \cdot 0.75mA)$
$= 1.40375W$

The maximum ambient temperature before the AAT3697 thermal loop becomes active can now be calculated using Equation 8:

Eq. 10: $T_A = 110°C - (50°C/W \cdot 1.40375W)$
$= 39.8125°C$

Therefore, under the stated conditions for this worst case power dissipation example, the AAT3697 will enter the thermal loop and lower the fast charge constant current when the ambient operating temperature rises above 39.8°C.

Capacitor Selection

Input Capacitor

In general, it is good design practice to place a decoupling capacitor between the ADP pin and ground. An input capacitor in the range of 1µF to 22µF is recommended. If the source supply is unregulated, it may be necessary to increase the capacitance to keep the input voltage above the under-voltage lockout threshold during device enable and when battery charging is initiated.

If the AAT3697 adapter input is to be used in a system with an external power supply source, such as a typical AC-to-DC wall adapter, then a C_{IN} capacitor in the range of 10µF should be used. A larger input capacitor in this application will minimize switching or power transient effects when the power supply is "hot plugged" in.

Output Capacitor

The AAT3697 only requires a 1µF ceramic capacitor on the BAT pin to maintain circuit stability. This value should be increased to 10µF or more if the battery connection is made any distance from the charger output. If the AAT3697 is to be used in applications where the battery can be removed from the charger, such as with desktop charging cradles, an output capacitor greater than 10µF may be required to prevent the device from cycling on and off when no battery is present.

Printed Circuit Board Layout Considerations

For the best results, it is recommended to physically place the battery pack as close as possible to the AAT3697 BAT pin. To minimize voltage drops on the PCB, keep the high current carrying traces adequately wide. For maximum power dissipation of the AAT3697 3x3mm TDFN package, the metal substrate should be solder bonded to the board. It is also recommended to maximize the substrate contact to the PCB ground plane layer to further increase local heat dissipation. Refer to the AAT3697 evaluation board for a good layout example (see Figures 4 and 5).

AAT3697 Evaluation Board Layout

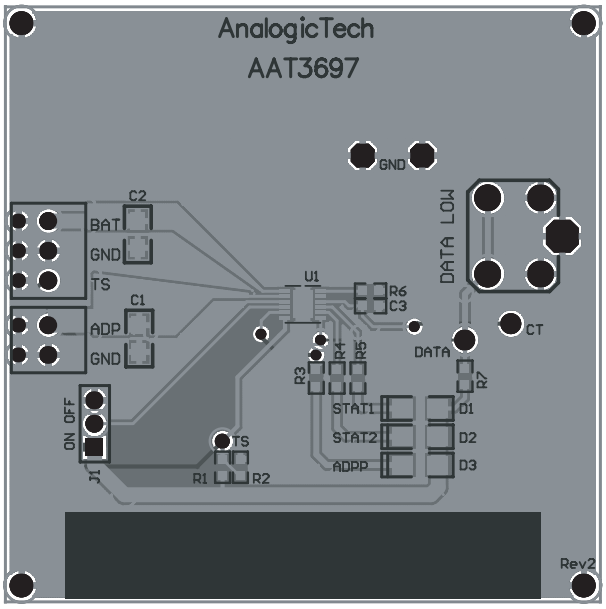

Figure 4: AAT3697 Evaluation Board Component Side Layout.

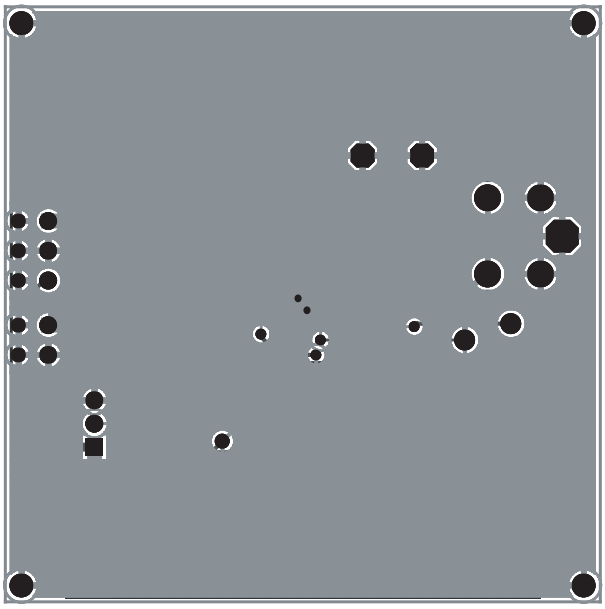

Figure 5: AAT3697 Evaluation Board Solder Side Layout.

AAT3697 Evaluation Board Schematic Diagram

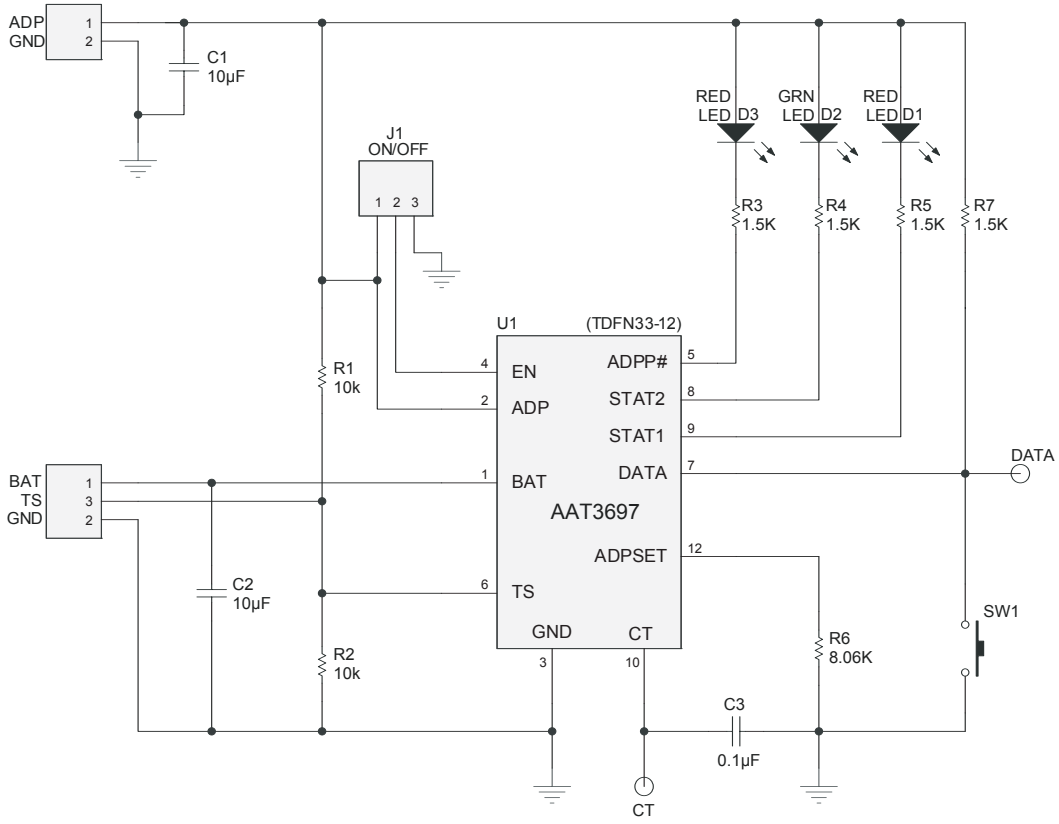

AAT3697 Evaluation Board Bill of Materials (BOM)

Quantity	Description	Desig.	Footprint	Manufacturer	Part Number
1	Test Pin	DATA	PAD	Mill-Max	6821-0-0001-00-00-08-0
1	Connecting Terminal Block, 2.54mm, 2 Position	ADP, GND	TBLOK2	Phoenix Contact	277-1274-ND
1	Connecting Terminal Block, 2.54mm, 3 Position	BAT, GND, TS	TBLOK3	Phoenix Contact	277-1273-ND
2	Capacitor, Ceramic, 10µF 6.3V 10% X5R 0805	C1, C2	0805	Murata	GRM219R60J106KE19
1	Capacitor, Ceramic, 0.1µF 10% 16V X7R 0603	C3	0603	Murata	GRM188R71C104KA01D
2	Typical Red LED, Ultra-Bright	D1, D3	1206LED	Chicago Miniature Lamp	CMD15-21SRC/TR8
1	Typical Green LED	D2	1206LED	Chicago Miniature Lamp	CMD15-21VGC/TR8
1	Header, 3-Pin	J1	HEADER2MM-3	Sullins	6821-0-0001-00-00-08-0
1	Resistor, 10kΩ, 1/16W 1% 0603 SMD	R1, R2	0603	Panasonic/ECG	P10KCFCT-ND
1	Resistor, 8.06kΩ, 1/16W 1% 0603 SMD	R6	0603	Panasonic/ECG	P8.06KHCT-ND
4	Resistor, 1.5kΩ, 1/16W 5% 0603 SMD	R3, R4, R5, R7	0603	Panasonic/ECG	P1.5KCGCT-ND
1	Switch Tact 6mm SPST H = 5.0mm	SW1	Switch	ITT Industries/ C&K Div	CKN9012-ND
1	AAT3697 2A Lithium-Ion/ Polymer Battery Charger	U1	TDFN33-12	AnalogicTech	AAT3697IWP-4.2

Ordering Information

Trickle Charge	Package	Marking[1]	Part Number (Tape and Reel)[2]
Yes	TDFN33-12	VCXYY	**AAT3697IWP-4.2-T1**

All AnalogicTech products are offered in Pb-free packaging. The term "Pb-free" means semiconductor products that are in compliance with current RoHS standards, including the requirement that lead not exceed 0.1% by weight in homogeneous materials. For more information, please visit our website at http://www.analogictech.com/pbfree.

Package Information[3]

TDFN33-12

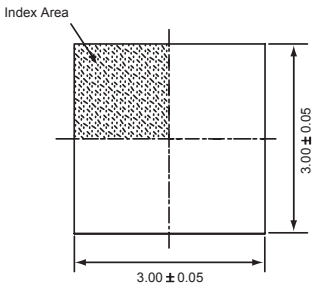

Top View

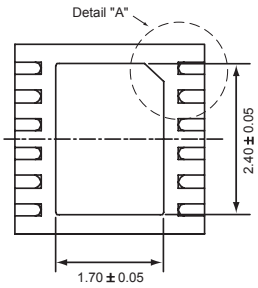

Bottom View

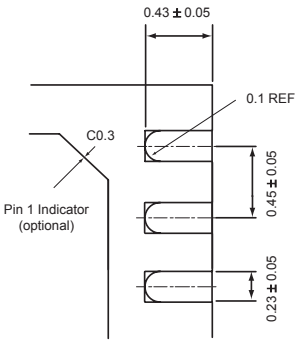

Detail "A"

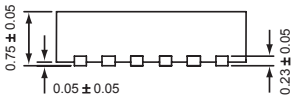

Side View

All dimensions in millimeters.

1. XYY = assembly and date code.
2. Sample stock is generally held on part numbers listed in **BOLD**.
3. The leadless package family, which includes QFN, TQFN, DFN, TDFN and STDFN, has exposed copper (unplated) at the end of the lead terminals due to the manufacturing process. A solder fillet at the exposed copper edge cannot be guaranteed and is not required to ensure a proper bottom solder connection.

© Advanced Analogic Technologies, Inc.

AnalogicTech cannot assume responsibility for use of any circuitry other than circuitry entirely embodied in an AnalogicTech product. No circuit patent licenses, copyrights, mask work rights, or other intellectual property rights are implied. AnalogicTech reserves the right to make changes to their products or specifications or to discontinue any product or service without notice. Customers are advised to obtain the latest version of relevant information to verify, before placing orders, that information being relied on is current and complete. All products are sold subject to the terms and conditions of sale supplied at the time of order acknowledgement, including those pertaining to warranty, patent infringement, and limitation of liability. AnalogicTech warrants performance of its semiconductor products to the specifications applicable at the time of sale in accordance with AnalogicTech's standard warranty. Testing and other quality control techniques are utilized to the extent AnalogicTech deems necessary to support this warranty. Specific testing of all parameters of each device is not necessarily performed.

AnalogicTech and the AnalogicTech logo are trademarks of Advanced Analogic Technologies Incorporated. All other brand and product names appearing in this document are registered trademarks or trademarks of their respective holders.

Advanced Analogic Technologies, Inc.
830 E. Arques Avenue, Sunnyvale, CA 94085
Phone (408) 737-4600
Fax (408) 737-4611