**ROHS**

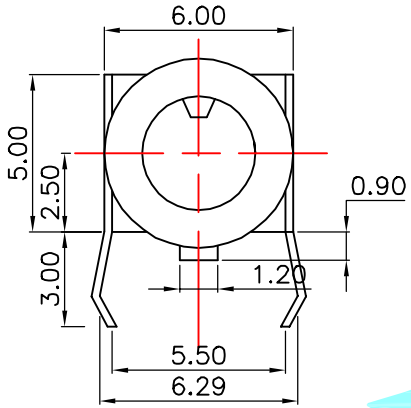


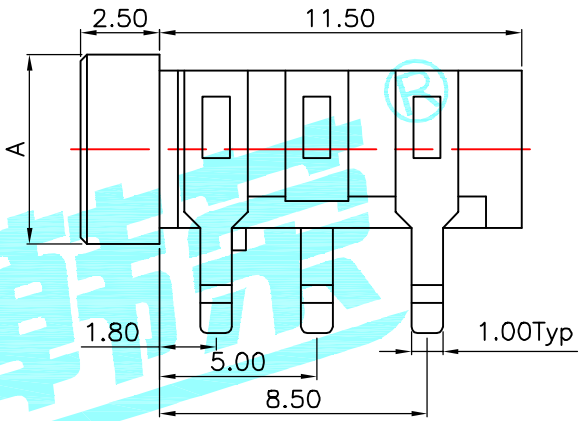


P.C.B Layout (copper-sided view)

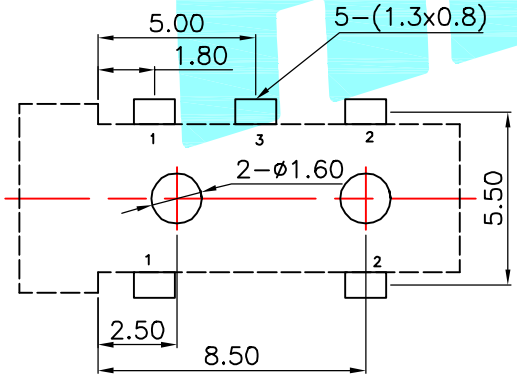


| A=ø5 | PJ-3133 |
|---|---|
| Schematic | 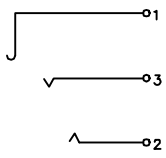 |

Rating:0.5A 30V DC
Contact Resistance:100 mΩ Max.
Operating temperature:-20℃~70℃
Operating force:3-20N
Operating Life:5,000cycles

| ITEM | PART NAME | TER'NO. | QTY. | MATERIAL | FINISHING | REMARK |
|---|---|---|---|---|---|---|
| ② | Terminal | —— | 5 | Phosphor bronze | Au Plating | —— |
| ① | Housing | —— | 1 | Nylon | Black | —— |

| APPROVALS | | DATE |
|---|---|---|
| DRAWN | J.X.Zhang | 2013/11/11 |
| CHECKED | | |
| APPROVALS | | |

HRO韩京® ELECTRONICS CO.,LTD

TITLE: PHONE JACKES

PART NO. PJ-3133

| TOLERANCES ARE | | | ANGLE | UNIT: mm | SCALE: 1:1 | PROJ. |
|---|---|---|---|---|---|---|
| | 30~以上 | ±0.30 | | | | |
| | 10~30 | ±0.20 | | | | |
| | 5~10 | ±0.15 | ±2° | DRAWING NO. | —— | SHEET 1 OF 1 |
| | ~ 5 | ±0.10 | | | | |

| ECN NO. | REV. | DATE. | DESCRIPTION. | CHANGE. | CHECK. | APPRO. |
|---|---|---|---|---|---|---|
| —— | A | —— | NEW | —— | —— | —— |

HRO韩京®