Product Features

- 30 ~ 2150MHz
- High Gain
- High linearity
- SOIC-8 SMD Type package
- Lower manufacturing cost
- Low Noise Figure
- -65dBc CSO 79 Channels @ +30dBmV/ch
- -61dBc CTB 79 Channels @ +30dBmV/ch

Applications

- Low Noise Amplifier for CATV
- Cable Modem
- FTTH (G-PON, GE-PON)
- Optical node

Package Type : SOIC-8

Description

AE512 is designed as low cost drive amplifiers for many applications including FTTH, CATV System.
This MMIC is based on Gallium Arsenide Enhancement Mode pHEMT which shows low current draw and very low noise.
The data in this spec sheet is valid only for 75ohm application. 50ohm data is in a separate spec sheet.

Electrical Specifications

PARAMETER		UNIT	MIN	TYP	MAX	CONDITION
Frequency		MHz	30	-	2150	-
Gain		dB	15 13	17 15	- -	30 ~ 1000MHz 50 ~ 2150MHz
Gain Flatness		dB	-	0.4	-	30 ~ 1000MHz
Input Return Loss		dB	-	-12	-	-
Output Return Loss		dB	-	-13	-	-
Output IP3		dBm	30	34	-	@ 500MHz/5dBm 2tone
1dB Compression Point		dBm	18	20	-	@500MHz
Noise Figure		dB	-	1.5	2.0	30 ~ 1000MHz
CSO	30 ~ 1004MHz	dBc	-	-65	-60	79 channel, +30dBmV/ch
CTB	30 ~ 1004MHz	dBc	-	-61	-56	79 channel, +30dBmV/ch
DC Current		mA	-	100	-	Vdd = 5.0V

Note
1. Test conditions unless otherwise noted. Test Freq = 500MHz, T=25℃, Vdd=5V, 75Ω system
2. OIP3 measured with 2 tones at an output power of +5dBm/tone separated by 1MHz, Test Freq = 500MHz

Absolute Maximum Ratings

PARAMETER	UNIT	MIN	TYP	MAX
Device Voltage	VDC	-	5	8
Operating Temperature	℃	-40	-	85
Storage Temperature	℃	-40	-	150
ESD Human Body Model	-	-	Class 1B	-
Moisture Sensitivity Level	-	-	MSL1	-
Junction Temperature (Tj)	℃	-	-	180
Thermal Resistance (Rth)	℃/W	-	40	-

Application Circuit @ 30 ~ 1000MHz, 75ohm System, VDD=5V

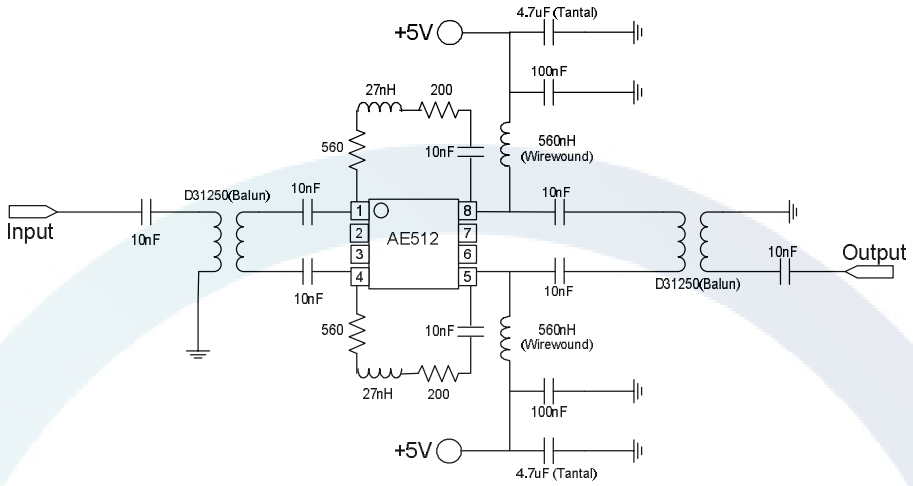

Typical Performance @ VDD=5V, IDS=100mA, T=25℃, 75ohm System

PARAMETER	UNIT	TYPICAL		
Frequency	MHz	30	500	1000
Gain(S21)	dB	16.9	16.9	16.9
Input Return Loss(S11)	dB	-9	-25	-20
Output Return Loss(S22)	dB	-11.5	-19	-14
Output IP3	dBm	31.5	34	33
1dB Compression Point	dBm	18.5	20	19.5
Noise Figure	dB	1.4	1.5	1.8
CSO*	dBc	-65		
CTB*	dBc	-61		
Current	mA	100		

* 79channels_Flat, +30dBmV

S-Parameter

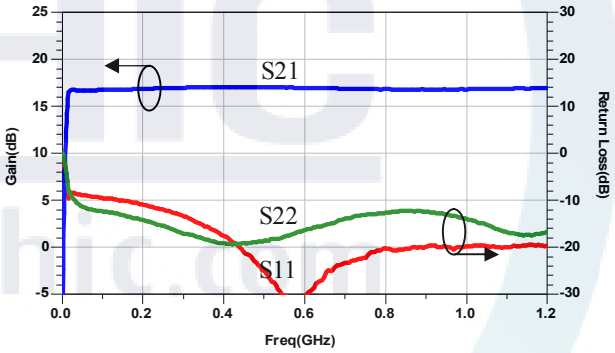

Frequency vs. Noise Figure

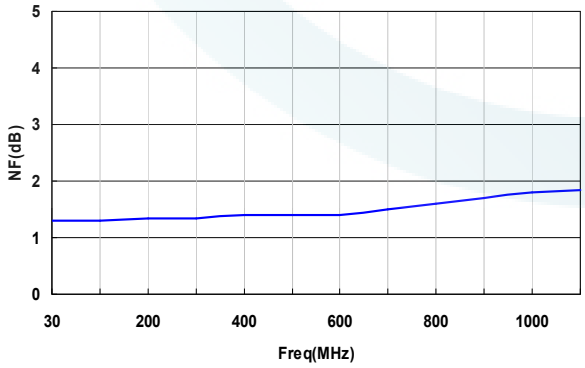

Frequency vs. P1dB

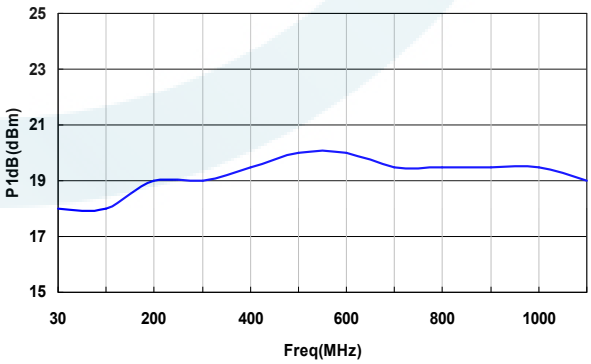

Frequency vs. OIP3

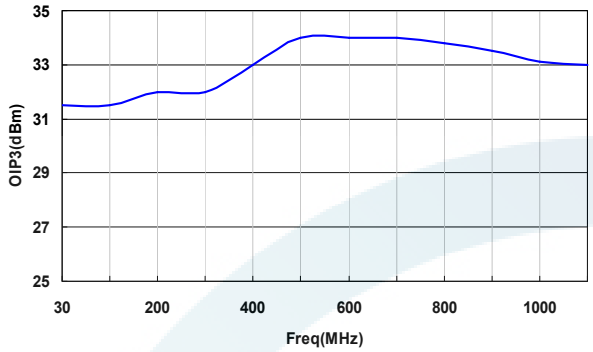

Application Circuit @ 30 ~ 2150MHz, 75ohm System, VDD=5V

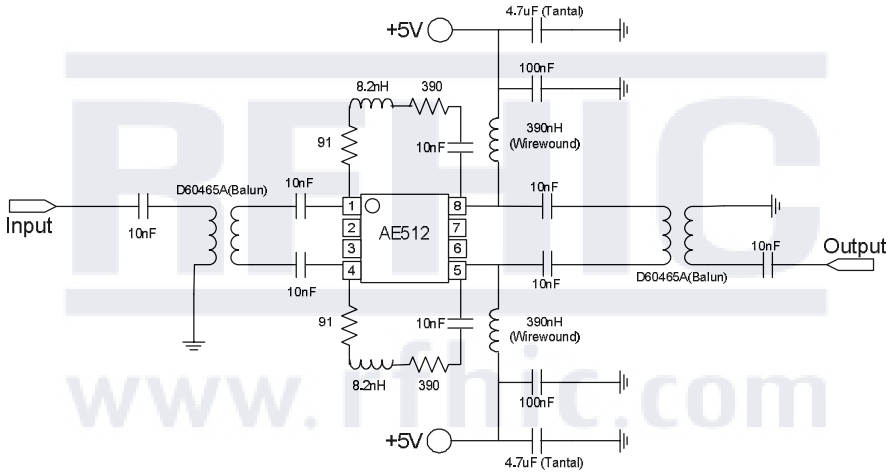

Typical Performance @ VDD=5V, IDS=100mA, T=25℃, 75ohm System

PARAMETER	Units	Typical		
Frequency	MHz	50	1000	2150
Gain(S21)	dB	15.4	15.3	13.3
Input Return Loss(S11)	dB	-12.5	-17	-8.5
Output Return Loss(S22)	dB	-14.5	-11	-8.5
Output IP3	dBm	31.7	34.3	33
1dB Compression Point	dBm	18	20.8	19
Noise Figure	dB	1.8	2.1	3.5
CSO*	dBc	-65		
CTB*	dBc	-61		
Current	mA	100		

* 79channels_Flat, +30dBmV

S-Parameter

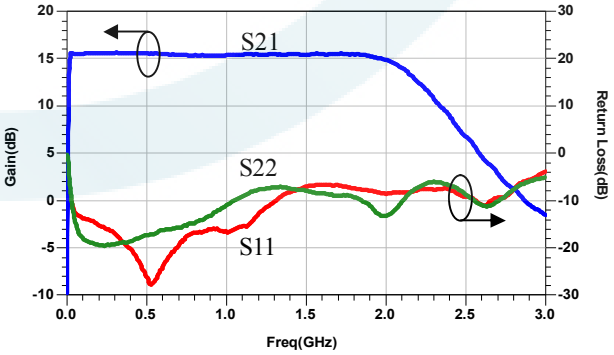

Frequency vs. Noise Figure

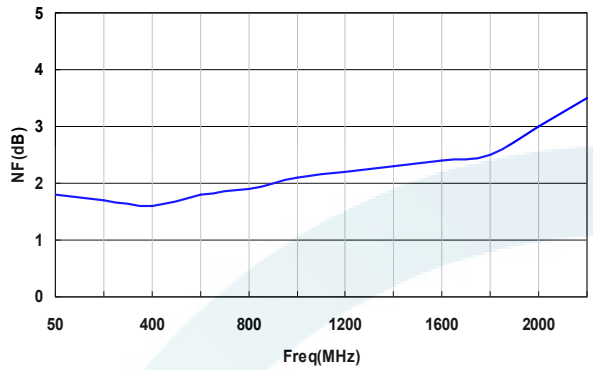

Frequency vs. P1dB

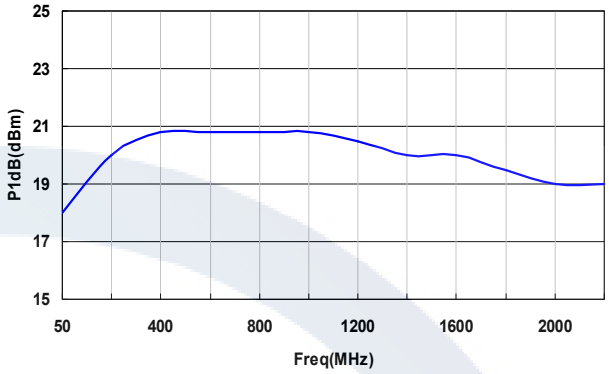

Frequency vs. OIP3

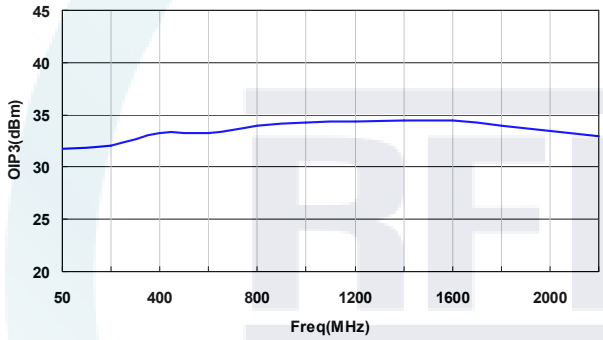

RFHIC
www.rfhic.com

Package Dimensions (Type: SOIC-8)

* Unit: mm[inch] | Tolerance ±0.2[.008]

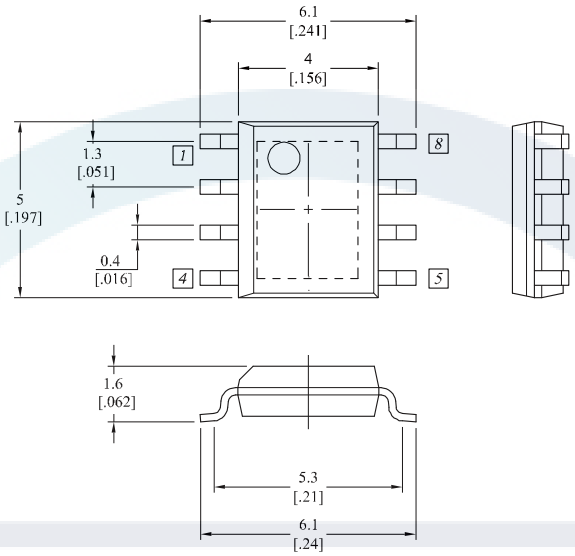

Pin Description			
Pin No	**Function**	**Pin No**	**Function**
1	RF IN(2)	5	RF OUT(1)
2	GND	6	GND
3	GND	7	GND
4	RF IN(1)	8	RF OUT(2)

Recommended Pattern

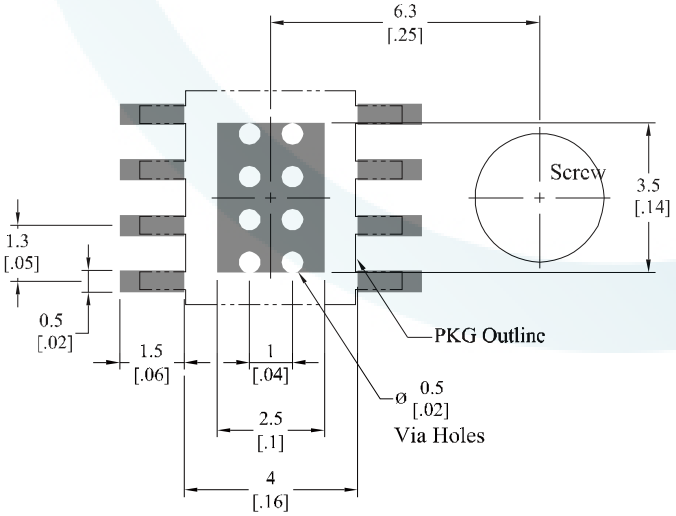

Mounting Configuration Notes

1. Ground / thermal via holes are critical for the proper performance of this device.
2. Add as much copper as possible to inner and outer layers near the part to ensure optimal thermal performance.
3. Mounting screws can be added near the part to fasten the board to a heat sink. Ensure that the ground / thermal via hole region contacts the heat sink.
4. Do not put solder mask on the backside of the PCB in the region where the board contacts the heat sink.
5. RF trace width depends upon the PCB material and construction.
6. Use 1 oz. Copper minimum.

Revision History

Part Number	Release Date	Version	Modification	Data Sheet Status
AE512	2014.04.18	1.3	Thermal Resistance (1p)	-
AE512	2013.08.14	1.2	Package Dimensions (5p)	-
AE512	2013.05.20	1.1	Product Pictures	-

RFHIC
www.rfhic.com

RFHIC Corporation reserves the right to make changes to any products herein or to discontinue any product at any time without notice. While product specifications have been thoroughly examined for reliability, RFHIC Corporation strongly recommends buyers to verify that the information they are using is accurate before ordering. RFHIC Corporation does not assume any liability for the suitability of its products for any particular purpose, and disclaims any and all liability, including without limitation consequential or incidental damages.
RFHIC products are not intended for use in life support equipment or application where malfunction of the product can be expected to result in personal injury or death. Buyer uses or sells such products for any such unintended or unauthorized application, buyer shall indemnify, protect and hold RFHIC Corporation and its directors, officers, stockholders, employees, representatives and distributors harmless against any and all claims arising out of such unauthorized use.

Sales, inquiries and support should be directed to the local authorized geographic distributor for RFHIC Corporation. For customers in the US, please contact the US Sales Team at 919-677-8780. For all other inquiries, please contact the International Sales Team at 82-31-8069-3036