S34MS01G1
S34MS02G1
S34MS04G1

1-bit ECC, x8 and x16 I/O, 1.8V V_{CC} SLC NAND Flash for Embedded

Distinctive Characteristics

- Density
  - 1 Gb / 2 Gb / 4 Gb
- Architecture
  - Input / Output Bus Width: 8 bits / 16 bits
  - Page size:
    - ×8 = 2112 (2048 + 64) bytes; 64 bytes is spare area
    - ×16 = 1056 (1024 + 32) words; 32 words is spare area
  - Block size: 64 pages
    - ×8 = 128 KB + 4 KB
    - ×16 = 64k + 2k words
  - Plane size:
    - 1 Gb / 2 Gb: 1024 Blocks per Plane
      - ×8 = 128 MB + 4 MB
      - ×16 = 64M + 2M words
    - 4 Gb: 2048 blocks per plane
      - ×8 = 256 MB + 8 MB
      - ×16 = 128M + 4M words
  - Device size:
    - 1 Gb: 1 Plane per Device or 128 MB
    - 2 Gb: 2 Planes per Device or 256 MB
    - 4 Gb: 2 Planes per Device or 512 MB
- NAND flash interface
  - Open NAND Flash Interface (ONFI) 1.0 compliant
  - Address, Data, and Commands multiplexed
- Supply voltage
  - 1.8-V device: Vcc = 1.7 V ~ 1.95 V
- Security
  - One Time Programmable (OTP) area
  - Hardware program/erase disabled during power transition
- Additional features
  - 2 Gb and 4 Gb parts support Multiplane Program and Erase commands
  - Supports Copy Back Program
  - 2 Gb and 4 Gb parts support Multiplane Copy Back Program
  - Supports Read Cache
- Electronic signature
  - Manufacturer ID: 01h
- Operating temperature
  - Industrial: –40 °C to 85 °C
  - Industrial Plus: –40 °C to 105 °C

Performance

- Page Read / Program
  - Random access: 25 µs (Max)
  - Sequential access: 45 ns (Min)
  - Program time / Multiplane Program time: 250 µs (Typ)
- Block Erase (S34MS01G1)
  - Block Erase time: 2.0 ms (Typ)
- Block Erase / Multiplane Erase (S34MS02G1, S34MS04G1)
  - Block Erase time: 3.5 ms (Typ)
- Reliability
  - 100,000 Program / Erase cycles (Typ) (with 1-bit ECC per 528 bytes (×8) or 264 words (×16))
  - 10-year Data retention (Typ)
  - For one plane structure (1-Gb density)
    - Block zero is valid and will be valid for at least 1,000 program-erase cycles with ECC
  - For two plane structures (2-Gb and 4-Gb densities)
    - Blocks zero and one are valid and will be valid for at least 1,000 program-erase cycles with ECC
- Package options
  - Pb-free and Low Halogen
  - 48-Pin TSOP 12 x 20 x 1.2 mm
  - 63-Ball BGA 9 x 11 x 1 mm

Contents

Distinctive Characteristics 1

Performance 1

1. General Description 3
1.1 Logic Diagram 4
1.2 Connection Diagram 5
1.3 Pin Description 6
1.4 Block Diagram 7
1.5 Array Organization 8
1.6 Addressing 9
1.7 Mode Selection 12

2. Bus Operation 13
2.1 Command Input 13
2.2 Address Input 13
2.3 Data Input 13
2.4 Data Output 13
2.5 Write Protect 13
2.6 Standby 13

3. Command Set 14
3.1 Page Read 15
3.2 Page Program 15
3.3 Multiplane Program — S34MS02G1 and S34MS04G1 16
3.4 Page Reprogram — S34MS02G1 and S34MS04G1 ... 16
3.5 Block Erase 17
3.6 Multiplane Block Erase — S34MS02G1 and S34MS04G1 18
3.7 Copy Back Program 18
3.8 EDC Operation — S34MS02G1 and S34MS04G1 19
3.9 Read Status Register 21
3.10 Read Status Enhanced — S34MS02G1 and S34MS04G1 21
3.11 Read Status Register Field Definition 22
3.12 Reset 22
3.13 Read Cache 22
3.14 Cache Program 23
3.15 Multiplane Cache Program — S34MS02G1 and S34MS04G1 24
3.16 Read ID 25
3.17 Read ID2 27
3.18 Read ONFI Signature 27
3.19 Read Parameter Page 28
3.20 One-Time Programmable (OTP) Entry 30

4. Signal Descriptions 30
4.1 Data Protection and Power On / Off Sequence 30
4.2 Ready/Busy 31
4.3 Write Protect Operation 32

5. Electrical Characteristics 33
5.1 Valid Blocks 33
5.2 Absolute Maximum Ratings 33
5.3 AC Test Conditions 33
5.4 AC Characteristics 34
5.5 DC Characteristics 35
5.6 Pin Capacitance 35
5.7 Program / Erase Characteristics 36

6. Timing Diagrams 37
6.1 Command Latch Cycle 37
6.2 Address Latch Cycle 38
6.3 Data Input Cycle Timing 38
6.4 Data Output Cycle Timing (CLE=L, WE#=H, ALE=L, WP#=H) 39
6.5 Data Output Cycle Timing (EDO Type, CLE=L, WE#=H, ALE=L) 39
6.6 Page Read Operation 40
6.7 Page Read Operation (Interrupted by CE#) 41
6.8 Page Read Operation Timing with CE# Don't Care 42
6.9 Page Program Operation 42
6.10 Page Program Operation Timing with CE# Don't Care. 43
6.11 Page Program Operation with Random Data Input 43
6.12 Random Data Output In a Page 44
6.13 Multiplane Page Program Operation — S34MS02G1 and S34MS04G1 44
6.14 Block Erase Operation 45
6.15 Multiplane Block Erase — S34MS02G1 and S34MS04G1 46
6.16 Copy Back Read with Optional Data Readout 47
6.17 Copy Back Program Operation With Random Data Input.. 47
6.18 Multiplane Copy Back Program — S34MS02G1 and S34MS04G1 48
6.19 Read Status Register Timing 49
6.20 Read Status Enhanced Timing 50
6.21 Reset Operation Timing 50
6.22 Read Cache 51
6.23 Cache Program 53
6.24 Multiplane Cache Program — S34MS02G1 and S34MS04G1 54
6.25 Read ID Operation Timing 56
6.26 Read ID2 Operation Timing 56
6.27 Read ONFI Signature Timing 57
6.28 Read Parameter Page Timing 57
6.29 OTP Entry Timing 58
6.30 Power On and Data Protection Timing 58
6.31 WP# Handling 59

7. Physical Interface 60
7.1 Physical Diagram 60

8. System Interface 62

9. Error Management 64
9.1 System Bad Block Replacement 64
9.2 Bad Block Management 65

10. Ordering Information 66

11. Document History 67

1. General Description

The Cypress S34MS01G1, S34MS02G1, and S34MS04G1 series is offered in 1.8 V_{CC} and V_{CCQ} power supply, and with ×8 or ×16 I/O interface. Its NAND cell provides the most cost-effective solution for the solid state mass storage market. The memory is divided into blocks that can be erased independently so it is possible to preserve valid data while old data is erased. The page size for ×8 is (2048 + 64 spare) bytes; for ×16 (1024 + 32) words.

Each block can be programmed and erased up to 100,000 cycles with ECC (error correction code) on. To extend the lifetime of NAND flash devices, the implementation of an ECC is mandatory.

The chip supports CE# don't care function. This function allows the direct download of the code from the NAND flash memory device by a microcontroller, since the CE# transitions do not stop the read operation.

The devices have a Read Cache feature that improves the read throughput for large files. During cache reading, the devices load the data in a cache register while the previous data is transferred to the I/O buffers to be read.

Like all other 2-kB page NAND flash devices, a program operation typically writes 2112 bytes (×8), or 1056 words (×16) in 250 µs and an erase operation can typically be performed in 2 ms (S34MS01G1) on a 128-kB block (×8) or 64-kword block (×16). In addition, thanks to multiplane architecture, it is possible to program two pages at a time (one per plane) or to erase two blocks at a time (again, one per plane). The multiplane architecture allows program time to be reduced by 40% and erase time to be reduced by 50%.

In multiplane operations, data in the page can be read out at 45 ns cycle time per byte. The I/O pins serve as the ports for command and address input as well as data input/output. This interface allows a reduced pin count and easy migration towards different densities, without any rearrangement of the footprint.

Commands, Data, and Addresses are asynchronously introduced using CE#, WE#, ALE, and CLE control pins.

The on-chip Program/Erase Controller automates all read, program, and erase functions including pulse repetition, where required, and internal verification and margining of data. A WP# pin is available to provide hardware protection against program and erase operations.

The output pin R/B# (open drain buffer) signals the status of the device during each operation. It identifies if the program/erase/read controller is currently active. The use of an open-drain output allows the Ready/Busy pins from several memories to connect to a single pull-up resistor. In a system with multiple memories the
R/B# pins can be connected all together to provide a global status signal.

The Reprogram function allows the optimization of defective block management — when a Page Program operation fails the data can be directly programmed in another page inside the same array section without the time consuming serial data insertion phase. The Copy Back operation automatically executes embedded error detection operation: 1-bit error out of every 528 bytes (×8) or 264 words (×16) can be detected. With this feature it is no longer necessary to use an external mechanism to detect Copy Back operation errors.

Multiplane Copy Back is also supported. Data read out after Copy Back Read (both for single and multiplane cases) is allowed.

In addition, Cache Program and Multiplane Cache Program operations improve the programing throughput by programing data using the cache register.

The devices provide two innovative features: Page Reprogram and Multiplane Page Reprogram. The Page Reprogram re-programs one page. Normally, this operation is performed after a failed Page Program operation. Similarly, the Multiplane Page Reprogram re-programs two pages in parallel, one per plane. The first page must be in the first plane while the second page must be in the second plane. The Multiplane Page Reprogram operation is performed after a failed Multiplane Page Program operation. The Page Reprogram and Multiplane Page Reprogram guarantee improved performance, since data insertion can be omitted during re-program operations.

Note: The S34MS01G1 device does not support EDC.

The devices come with an OTP (one time programmable) area, which is a restricted access area where sensitive data/code can be stored permanently. This security feature is subject to an NDA (non-disclosure agreement) and is, therefore, not described in the data sheet. For more details, contact your nearest Cypress sales office.

Device	Density (bits)		Number of Planes	Number of Blocks per Plane	EDC Support
	Main	Spare			
S34MS01G1	128M x 8 64M x 16	4M x 8 2M x 16	1	1024	No
S34MS02G1	256M x 8 128M x 16	8M x 8 4M x 16	2	1024	Yes
S34MS04G1	512M x 8 256M x 16	16M x 8 8M x 16	2	2048	Yes

1.1 Logic Diagram

Figure 1.1 Logic Diagram

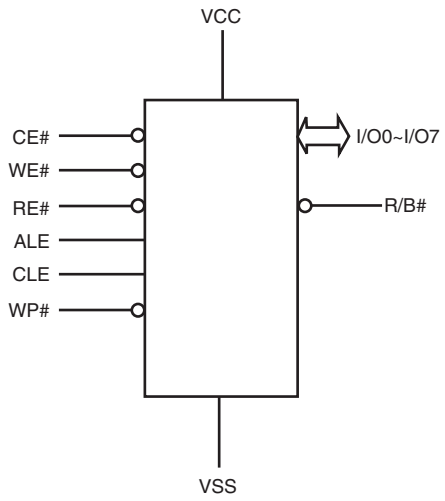

Table 1.1 Signal Names

I/O7 - I/O0 **(×8)**	Data Input / Outputs
I/O8 - I/O15 **(×16)**	
CLE	Command Latch Enable
ALE	Address Latch Enable
CE#	Chip Enable
RE#	Read Enable
WE#	Write Enable
WP#	Write Protect
R/B#	Read/Busy
VCC	Power Supply
VSS	Ground
NC	Not Connected

1.2 Connection Diagram

Figure 1.2 48-Pin TSOP1 Contact ×8, ×16 Devices

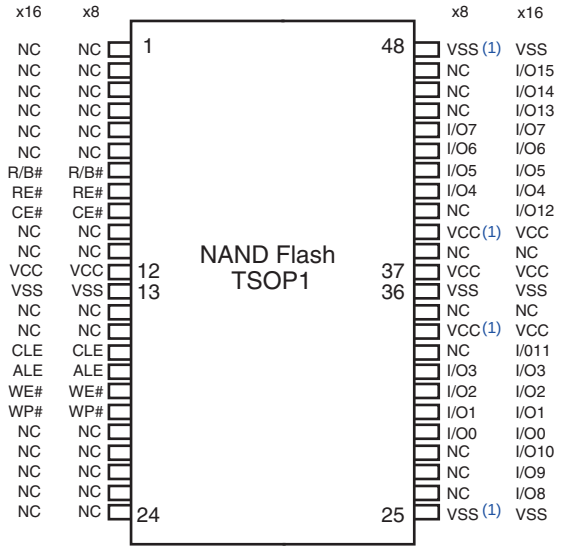

Note:
1. These pins should be connected to power supply or ground (as designated) following the ONFI specification, however they might not be bonded internally.

Figure 1.3 63-BGA Contact, ×8 Device (Balls Down, Top View)

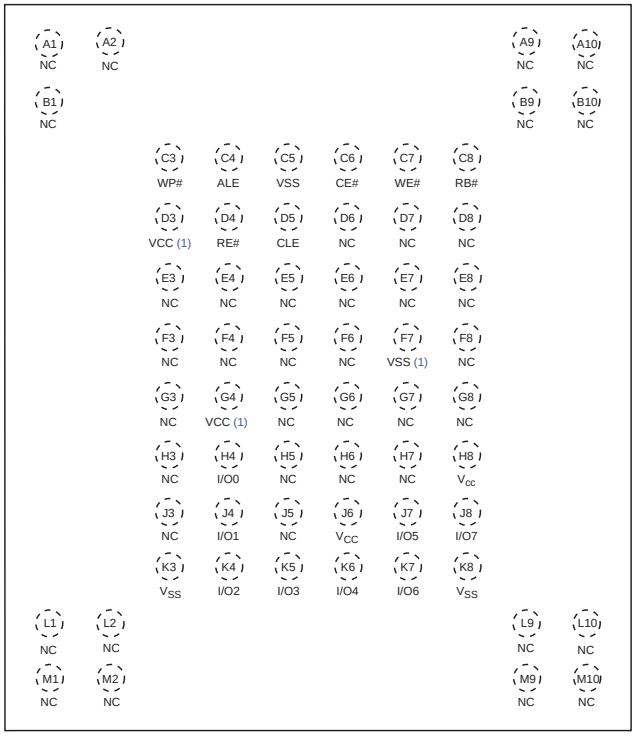

Note:
1. These pins should be connected to power supply or ground (as designated) following the ONFI specification, however they might not be bonded internally.

Figure 1.4 63-BGA Contact, x16 Device (Balls Down, Top View)

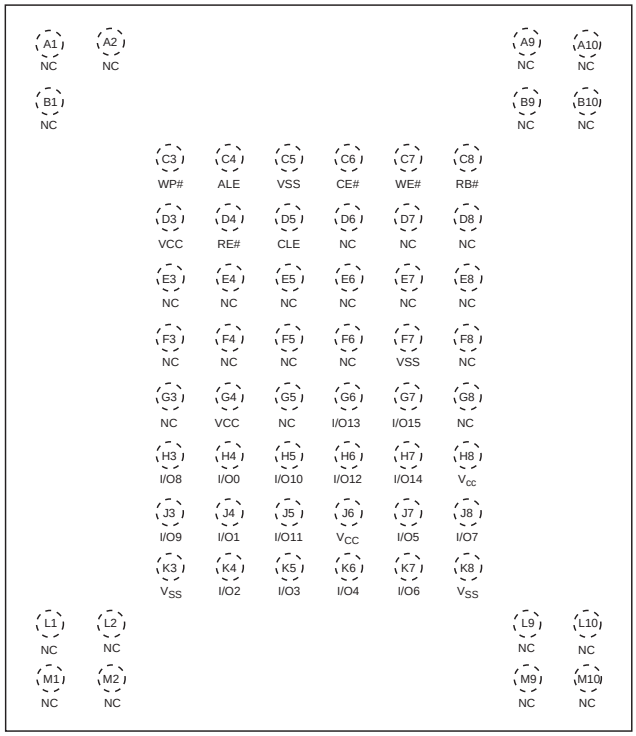

1.3 Pin Description

Table 1.2 Pin Description

Pin Name	Description
I/O0 - I/O7 **(×8)** I/O8 - I/O15 **(×16)**	**Inputs/Outputs**. The I/O pins are used for command input, address input, data input, and data output. The I/O pins float to High-Z when the device is deselected or the outputs are disabled.
CLE	**Command Latch Enable.** This input activates the latching of the I/O inputs inside the Command Register on the rising edge of Write Enable (WE#).
ALE	**Address Latch Enable.** This input activates the latching of the I/O inputs inside the Address Register on the rising edge of Write Enable (WE#).
CE#	**Chip Enable.** This input controls the selection of the device. When the device is not busy CE# low selects the memory.
WE#	**Write Enable.** This input latches Command, Address and Data. The I/O inputs are latched on the rising edge of WE#.
RE#	**Read Enable.** The RE# input is the serial data-out control, and when active drives the data onto the I/O bus. Data is valid t_{REA} after the falling edge of RE# which also increments the internal column address counter by one.
WP#	**Write Protect.** The WP# pin, when low, provides hardware protection against undesired data modification (program / erase).
R/B#	**Ready Busy**. The Ready/Busy output is an Open Drain pin that signals the state of the memory.
VCC	**Supply Voltage**. The V_{CC} supplies the power for all the operations (Read, Program, Erase). An internal lock circuit prevents the insertion of Commands when V_{CC} is less than V_{LKO}.
VSS	**Ground.**
NC	**Not Connected.**

Notes:

1. *A 0.1 µF capacitor should be connected between the V_{CC} Supply Voltage pin and the V_{SS} Ground pin to decouple the current surges from the power supply. The PCB track widths must be sufficient to carry the currents required during program and erase operations.*
2. *An internal voltage detector disables all functions whenever V_{CC} is below 1.1V to protect the device from any involuntary program/erase during power transitions.*

1.4 Block Diagram

Figure 1.5 Functional Block Diagram

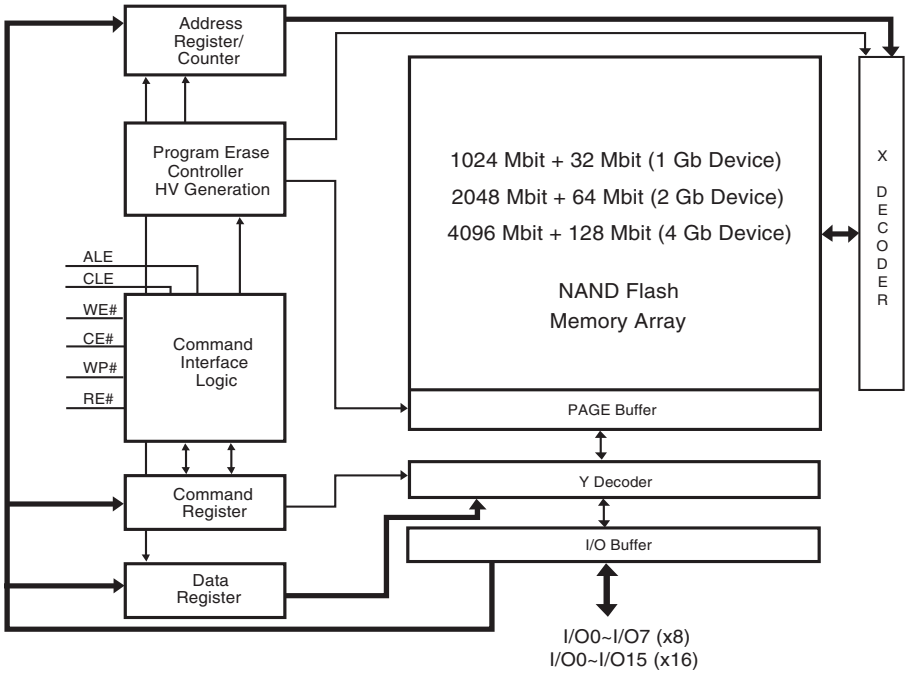

1.5 Array Organization

Figure 1.6 Array Organization — ×8

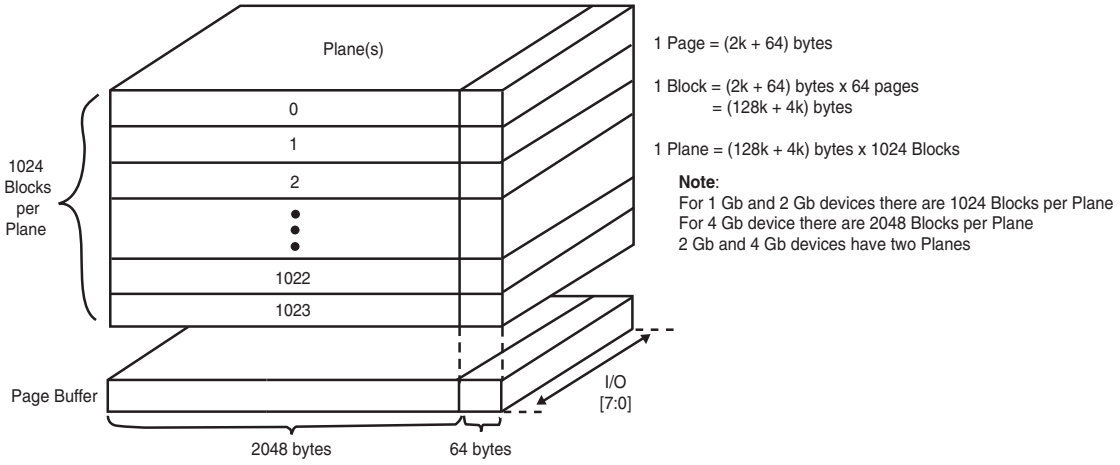

Array Organization(x8)

Figure 1.7 Array Organization — x16

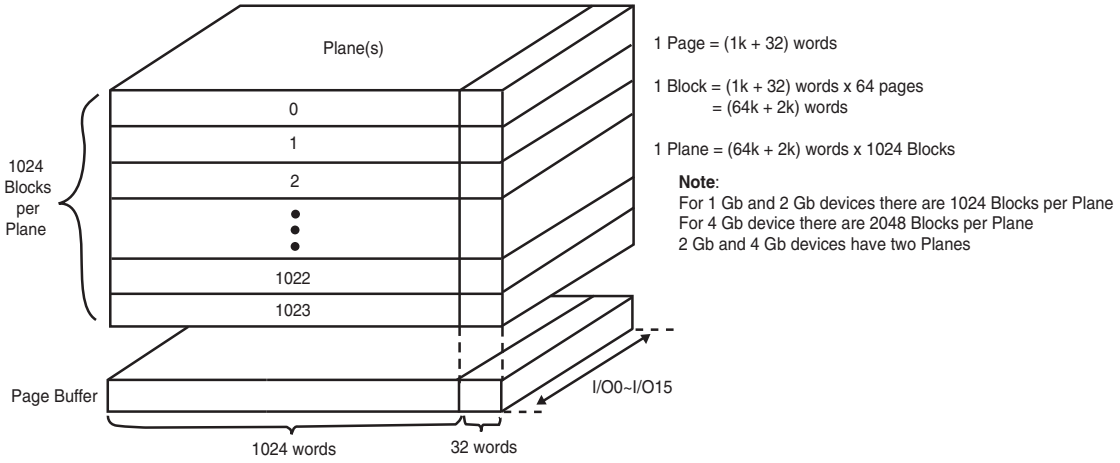

Array Organization(x16)

1.6 Addressing

1.6.1 S34MS01G1

Table 1.3 Address Cycle Map — 1 Gb Device

Bus Cycle	I/O [15:8] (5)	I/O0	I/O1	I/O2	I/O3	I/O4	I/O5	I/O6	I/O7
×8									
1st / Col. Add. 1	—	A0 (CA0)	A1 (CA1)	A2 (CA2)	A3 (CA3)	A4 (CA4)	A5 (CA5)	A6 (CA6)	A7 (CA7)
2nd / Col. Add. 2	—	A8 (CA8)	A9 (CA9)	A10 (CA10)	A11 (CA11)	Low	Low	Low	Low
3rd / Row Add. 1	—	A12 (PA0)	A13 (PA1)	A14 (PA2)	A15 (PA3)	A16 (PA4)	A17 (PA5)	A18 (BA0)	A19 (BA1)
4th / Row Add. 2	—	A20 (BA2)	A21 (BA3)	A22 (BA4)	A23 (BA5)	A24 (BA6)	A25 (BA7)	A26 (BA8)	A27 (BA9)
×16									
1st / Col. Add. 1	Low	A0 (CA0)	A1 (CA1)	A2 (CA2)	A3 (CA3)	A4 (CA4)	A5 (CA5)	A6 (CA6)	A7 (CA7)
2nd / Col. Add. 2	Low	A8 (CA8)	A9 (CA9)	A10 (CA10)	Low	Low	Low	Low	Low
3rd / Row Add. 1	Low	A11 (PA0)	A12 (PA1)	A13 (PA2)	A14 (PA3)	A15 (PA4)	A16 (PA5)	A17 (BA0)	A18 (BA1)
4th / Row Add. 2	Low	A19 (BA2)	A20 (BA3)	A21 (BA4)	A22 (BA5)	A23 (BA6)	A24 (BA7)	A25 (BA8)	A26 (BA9)

Notes:
1. *CAx = Column Address bit.*
2. *PAx = Page Address bit.*
3. *BAx = Block Address bit.*
4. *Block address concatenated with page address = actual page address, also known as the row address.*
5. *I/O[15:8] are not used during the addressing sequence and should be driven Low.*

For the ×8 address bits, the following rules apply:

- A0 - A11: column address in the page
- A12 - A17: page address in the block
- A18 - A27: block address

For the x16 address bits, the following rules apply:

- A0 - A10: column address in the page
- A11 - A16: page address in the block
- A17 - A26: block address

1.6.2 S34MS02G1

Table 1.4 Address Cycle Map — 2 Gb Device

Bus Cycle	I/O [15:8] (6)	I/O0	I/O1	I/O2	I/O3	I/O4	I/O5	I/O6	I/O7
×8									
1st / Col. Add. 1	—	A0 (CA0)	A1 (CA1)	A2 (CA2)	A3 (CA3)	A4 (CA4)	A5 (CA5)	A6 (CA6)	A7 (CA7)
2nd / Col. Add. 2	—	A8 (CA8)	A9 (CA9)	A10 (CA10)	A11 (CA11)	Low	Low	Low	Low
3rd / Row Add. 1	—	A12 (PA0)	A13 (PA1)	A14 (PA2)	A15 (PA3)	A16 (PA4)	A17 (PA5)	A18 (PLA0)	A19 (BA0)
4th / Row Add. 2	—	A20 (BA1)	A21 (BA2)	A22 (BA3)	A23 (BA4)	A24 (BA5)	A25 (BA6)	A26 (BA7)	A27 (BA8)
5th / Row Add. 3	—	A28 (BA9)	Low	Low	Low	Low	Low	Low	Low
×16									
1st / Col. Add. 1	Low	A0 (CA0)	A1 (CA1)	A2 (CA2)	A3 (CA3)	A4 (CA4)	A5 (CA5)	A6 (CA6)	A7 (CA7)
2nd / Col. Add. 2	Low	A8 (CA8)	A9 (CA9)	A10 (CA10)	Low	Low	Low	Low	Low
3rd / Row Add. 1	Low	A11 (PA0)	A12 (PA1)	A13 (PA2)	A14 (PA3)	A15 (PA4)	A16 (PA5)	A17 (PLA0)	A18 (BA0)
4th / Row Add. 2	Low	A19 (BA1)	A20 (BA2)	A21 (BA3)	A22 (BA4)	A23 (BA5)	A24 (BA6)	A25 (BA7)	A26 (BA8)
5th / Row Add. 3	Low	A27 (BA9)	Low	Low	Low	Low	Low	Low	Low

Notes:

1. *CAx = Column Address bit.*
2. *PAx = Page Address bit.*
3. *PLA0 = Plane Address bit zero.*
4. *BAx = Block Address bit.*
5. *Block address concatenated with page address and plane address = actual page address, also known as the row address.*
6. *I/O[15:8] are not used during the addressing sequence and should be driven Low.*

For the ×8 address bits, the following rules apply:

- A0 - A11: column address in the page
- A12 - A17: page address in the block
- A18: plane address (for multiplane operations) / block address (for normal operations)
- A19 - A28: block address

For the ×16 address bits, the following rules apply:

- A0 - A10: column address in the page
- A11 - A16: page address in the block
- A17: plane address (for multiplane operations) / block address (for normal operations)
- A18 - A27: block address

1.6.3 S34MS04G1

Table 1.5 Address Cycle Map — 4 Gb Device

Bus Cycle	I/O [15:8] (6)	I/O0	I/O1	I/O2	I/O3	I/O4	I/O5	I/O6	I/O7
×8									
1st / Col. Add. 1	—	A0 (CA0)	A1 (CA1)	A2 (CA2)	A3 (CA3)	A4 (CA4)	A5 (CA5)	A6 (CA6)	A7 (CA7)
2nd / Col. Add. 2	—	A8 (CA8)	A9 (CA9)	A10 (CA10)	A11 (CA11)	Low	Low	Low	Low
3rd / Row Add. 1	—	A12 (PA0)	A13 (PA1)	A14 (PA2)	A15 (PA3)	A16 (PA4)	A17 (PA5)	A18 (PLA0)	A19 (BA0)
4th / Row Add. 2	—	A20 (BA1)	A21 (BA2)	A22 (BA3)	A23 (BA4)	A24 (BA5)	A25 (BA6)	A26 (BA7)	A27 (BA8)
5th / Row Add. 3	—	A28 (BA9)	A29 (BA10)	Low	Low	Low	Low	Low	Low
×16									
1st / Col. Add. 1	Low	A0 (CA0)	A1 (CA1)	A2 (CA2)	A3 (CA3)	A4 (CA4)	A5 (CA5)	A6 (CA6)	A7 (CA7)
2nd / Col. Add. 2	Low	A8 (CA8)	A9 (CA9)	A10 (CA10)	Low	Low	Low	Low	Low
3rd / Row Add. 1	Low	A11 (PA0)	A12 (PA1)	A13 (PA2)	A14 (PA3)	A15 (PA4)	A16 (PA5)	A17 (PLA0)	A18 (BA0)
4th / Row Add. 2	Low	A19 (BA1)	A20 (BA2)	A21 (BA3)	A22 (BA4)	A23 (BA5)	A24 (BA6)	A25 (BA7)	A26 (BA8)
5th / Row Add. 3	Low	A27 (BA9)	A28 (BA10)	Low	Low	Low	Low	Low	Low

Notes:

1. *CAx = Column Address bit.*
2. *PAx = Page Address bit.*
3. *PLA0 = Plane Address bit zero.*
4. *BAx = Block Address bit.*
5. *Block address concatenated with page address and plane address = actual page address, also known as the row address.*
6. *I/O[15:8] are not used during the addressing sequence and should be driven Low.*

For the ×8 address bits, the following rules apply:

- A0 - A11: column address in the page
- A12 - A17: page address in the block
- A18: plane address (for multiplane operations) / block address (for normal operations)
- A19 - A29: block address

For the ×16 address bits, the following rules apply:

- A0 - A10: column address in the page
- A11 - A16: page address in the block
- A17: plane address (for multiplane operations) / block address (for normal operations)
- A18 - A28: block address

1.7 Mode Selection

Table 1.6 Mode Selection

Mode		CLE	ALE	CE#	WE#	RE#	WP#
Read Mode	Command Input	High	Low	Low	Rising	High	X
	Address Input	Low	High	Low	Rising	High	X
Program or Erase Mode	Command Input	High	Low	Low	Rising	High	High
	Address Input	Low	High	Low	Rising	High	High
Data Input		Low	Low	Low	Rising	High	High
Data Output (on going)		Low	Low	Low	High	Falling	X
Data Output (suspended)		X	X	X	High	High	X
Busy Time in Read		X	X	X	High	High (3)	X
Busy Time in Program		X	X	X	X	X	High
Busy Time in Erase		X	X	X	X	X	High
Write Protect		X	X	X	X	X	Low
Stand By		X	X	High	X	X	0V / V_{CC} (2)

Notes:

1. *X can be V_{IL} or V_{IH}. High = Logic level high. Low = Logic level low.*
2. *WP# should be biased to CMOS high or CMOS low for stand-by mode.*
3. *During Busy Time in Read, RE# must be held high to prevent unintended data out.*

2. Bus Operation

There are six standard bus operations that control the device: Command Input, Address Input, Data Input, Data Output, Write Protect, and Standby. (See Table 1.6.)

Typically glitches less than 5 ns on Chip Enable, Write Enable, and Read Enable are ignored by the memory and do not affect bus operations.

2.1 Command Input

The Command Input bus operation is used to give a command to the memory device. Commands are accepted with Chip Enable low, Command Latch Enable high, Address Latch Enable low, and Read Enable high and latched on the rising edge of Write Enable. Moreover, for commands that start a modify operation (program/erase) the Write Protect pin must be high. See Figure 6.1 on page 37 and Table 5.4 on page 34 for details of the timing requirements. Command codes are always applied on I/O7:0 regardless of the bus configuration (×8 or ×16).

2.2 Address Input

The Address Input bus operation allows the insertion of the memory address. For the S34MS02G1 and S34MS04G1 devices, five write cycles are needed to input the addresses. For the S34MS01G1, four write cycles are needed to input the addresses. If necessary, a 5th dummy address cycle can be issued to S34MS01G1, which will be ignored by the NAND device without causing problems. Addresses are accepted with Chip Enable low, Address Latch Enable high, Command Latch Enable low, and Read Enable high and latched on the rising edge of Write Enable. Moreover, for commands that start a modify operation (program/erase) the Write Protect pin must be high. See Figure 6.2 on page 38 and Table 5.4 on page 34 for details of the timing requirements. Addresses are always applied on I/O7:0 regardless of the bus configuration (×8 or ×16). Refer to Table 1.3 through Table 1.5 on page 11 for more detailed information.

2.3 Data Input

The Data Input bus operation allows the data to be programmed to be sent to the device. The data insertion is serial and timed by the Write Enable cycles. Data is accepted only with Chip Enable low, Address Latch Enable low, Command Latch Enable low, Read Enable high, and Write Protect high and latched on the rising edge of Write Enable. See Figure 6.3 on page 38 and Table 5.4 on page 34 for details of the timing requirements.

2.4 Data Output

The Data Output bus operation allows data to be read from the memory array and to check the Status Register content, the EDC register content, and the ID data. Data can be serially shifted out by toggling the Read Enable pin with Chip Enable low, Write Enable high, Address Latch Enable low, and Command Latch Enable low. See Figure 6.4 on page 39 to Figure 6.22 on page 49 and Table 5.4 on page 34 for details of the timings requirements.

2.5 Write Protect

The Hardware Write Protection is activated when the Write Protect pin is low. In this condition, modify operations do not start and the content of the memory is not altered. The Write Protect pin is not latched by Write Enable to ensure the protection even during power up.

2.6 Standby

In Standby, the device is deselected, outputs are disabled, and power consumption is reduced.

3. Command Set

Table 3.1 Command Set

Command	1st Cycle	2nd Cycle	3rd Cycle	4th Cycle	Acceptable Command during Busy	Supported on S34MS01G1
Page Read	00h	30h			No	Yes
Page Program	80h	10h			No	Yes
Random Data Input	85h				No	Yes
Random Data Output	05h	E0h			No	Yes
Multiplane Program	80h	11h	81h	10h	No	No
ONFI Multiplane Program	80h	11h	80h	10h	No	No
Page Reprogram	8Bh	10h			No	No
Multiplane Page Reprogram	8Bh	11h	8Bh	10h	No	No
Block Erase	60h	D0h			No	Yes
Multiplane Block Erase	60h	60h	D0h		No	No
ONFI Multiplane Block Erase	60h	D1h	60h	D0h	No	No
Copy Back Read	00h	35h			No	Yes
Copy Back Program	85h	10h			No	Yes
Multiplane Copy Back Program	85h	11h	81h	10h	No	No
ONFI Multiplane Copy Back Program	85h	11h	85h	10h	No	No
Special Read For Copy Back	00h	36h			No	No
Read EDC Status Register	7Bh				Yes	No
Read Status Register	70h				Yes	Yes
Read Status Enhanced	78h				Yes	No
Reset	FFh				Yes	Yes
Read Cache	31h				No	Yes
Read Cache Enhanced	00h	31h			No	No
Read Cache End	3Fh				No	Yes
Cache Program (End)	80h	10h			No	Yes
Cache Program (Start) / (Continue)	80h	15h			No	Yes
Multiplane Cache Program (Start/Continue)	80h	11h	81h	15h	No	No
ONFI Multiplane Cache Program (Start/Continue)	80h	11h	80h	15h	No	No
Multiplane Cache Program (End)	80h	11h	81h	10h	No	No
ONFI Multiplane Cache Program (End)	80h	11h	80h	10h	No	No
Read ID	90h				No	Yes
Read ID2	30h-65h-00h	30h			No	Yes
Read ONFI Signature	90h				No	Yes
Read Parameter Page	ECh				No	Yes
One-time Programmable (OTP) Area Entry	29h-17h-04h-19h				No	Yes

3.1 Page Read

Page Read is initiated by writing 00h and 30h to the command register along with five address cycles (four or five cycles for S34MS01G1). Two types of operations are available: random read and serial page read. Random read mode is enabled when the page address is changed. All data within the selected page are transferred to the data registers. The system controller may detect the completion of this data transfer (t_R) by analyzing the output of the R/B pin. Once the data in a page is loaded into the data registers, they may be read out in 45 ns cycle time by sequentially pulsing RE#. The repetitive high to low transitions of the RE# signal makes the device output the data, starting from the selected column address up to the last column address.

The device may output random data in a page instead of the sequential data by writing Random Data Output command. The column address of next data, which is going to be out, may be changed to the address that follows Random Data Output command. Random Data Output can be performed as many times as needed.

After power up, the device is in read mode, so 00h command cycle is not necessary to start a read operation. Any operation other than read or Random Data Output causes the device to exit read mode.

See Figure 6.6 on page 40 and Figure 6.12 on page 44 as references.

3.2 Page Program

A page program cycle consists of a serial data loading period in which up to 2112 bytes (×8) or 1056 words (×16) of data may be loaded into the data register, followed by a nonvolatile programming period where the loaded data is programmed into the appropriate cell.

The serial data loading period begins by inputting the Serial Data Input command (80h), followed by the five cycle address inputs (four cycles for S34MS01G1) and then serial data. The words other than those to be programmed do not need to be loaded. The device supports Random Data Input within a page. The column address of next data, which will be entered, may be changed to the address that follows the Random Data Input command (85h). Random Data Input may be performed as many times as needed.

The Page Program confirm command (10h) initiates the programming process. The internal write state controller automatically executes the algorithms and controls timings necessary for program and verify, thereby freeing the system controller for other tasks.

Once the program process starts, the Read Status Register commands (70h or 78h) may be issued to read the Status Register. The system controller can detect the completion of a program cycle by monitoring the R/B# output, or the Status bit (I/O6) of the Status Register. Only the Read Status commands (70h or 78h) or Reset command are valid while programming is in progress. When the Page Program is complete, the Write Status Bit (I/O0) may be checked. The internal write verify detects only errors for 1's that are not successfully programmed to 0's. The command register remains in Read Status command mode until another valid command is written to the command register. Figure 6.9 on page 42 and Figure 6.11 on page 43 detail the sequence.

The device is programmable by page, but it also allows multiple partial page programming of a word or consecutive bytes up to 2112 bytes (×8) or 1056 words (×16) in a single page program cycle.

The number of consecutive partial page programming operations (NOP) within the same page must not exceed the number indicated in Table 5.7 on page 36. Pages may be programmed in any order within a block.

Users who use "EDC check" (for S34MS02G1 and S34MS04G1 only) in copy back must comply with some limitations related to data handling during one page program sequence. Refer to Section 3.8 on page 19 for details.

If a Page Program operation is interrupted by hardware reset, power failure or other means, the host must ensure that the interrupted page is not used for further reading or programming operations until the next uninterrupted block erase is complete.

3.3 Multiplane Program — S34MS02G1 and S34MS04G1

The S34MS02G1 and S34MS04G1 devices support Multiplane Program, making it possible to program two pages in parallel, one page per plane.

A Multiplane Program cycle consists of a double serial data loading period in which up to 4224 bytes (×8) or 2112 words (×16) of data may be loaded into the data register, followed by a nonvolatile programming period where the loaded data is programmed into the appropriate cell. The serial data loading period begins with inputting the Serial Data Input command (80h), followed by the five cycle address inputs and serial data for the 1st page. The address for this page must be in the 1st plane (PLA0 = 0). The device supports Random Data Input exactly the same as in the case of page program operation. The Dummy Page Program Confirm command (11h) stops 1st page data input and the device becomes busy for a short time (t_{DBSY}). Once it has become ready again, the '81h' command must be issued, followed by 2nd page address (5 cycles) and its serial data input. The address for this page must be in the 2nd plane (PLA0 = 1). The Program Confirm command (10h) starts parallel programming of both pages.

Figure 6.13 on page 44 describes the sequences using the legacy protocol. In this case, the block address bits for the first plane are all zero and the second address issued selects the block for both planes. Figure 6.14 on page 45 describes the sequences using the ONFI protocol. For both addresses issued in this protocol, the block address bits must be the same except for the bit(s) that select the plane.

The user can check operation status by monitoring R/B# pin or reading the Status Register (command 70h or 78h). The Read Status Register command is also available during Dummy Busy time (t_{DBSY}). In case of failure in either page program, the fail bit of the Status Register will be set. Refer to Section 3.9 on page 21 for further info.

The number of consecutive partial page programming operations (NOP) within the same page must not exceed the number indicated in Table 5.7 on page 36. Pages may be programmed in any order within a block.

If a Multiplane Program operation is interrupted by hardware reset, power failure or other means, the host must ensure that the interrupted pages are not used for further reading or programming operations until the next uninterrupted block erases are complete for the applicable blocks.

3.4 Page Reprogram — S34MS02G1 and S34MS04G1

Page Program may result in a fail, which can be detected by Read Status Register. In this event, the host may call Page Reprogram. This command allows the reprogramming of the same pattern of the last (failed) page into another memory location. The command sequence initiates with reprogram setup (8Bh), followed by the five cycle address inputs of the target page. If the target pattern for the destination page is not changed compared to the last page, the program confirm can be issued (10h) without any data input cycle, as described in Figure 3.1.

Figure 3.1 Page Reprogram

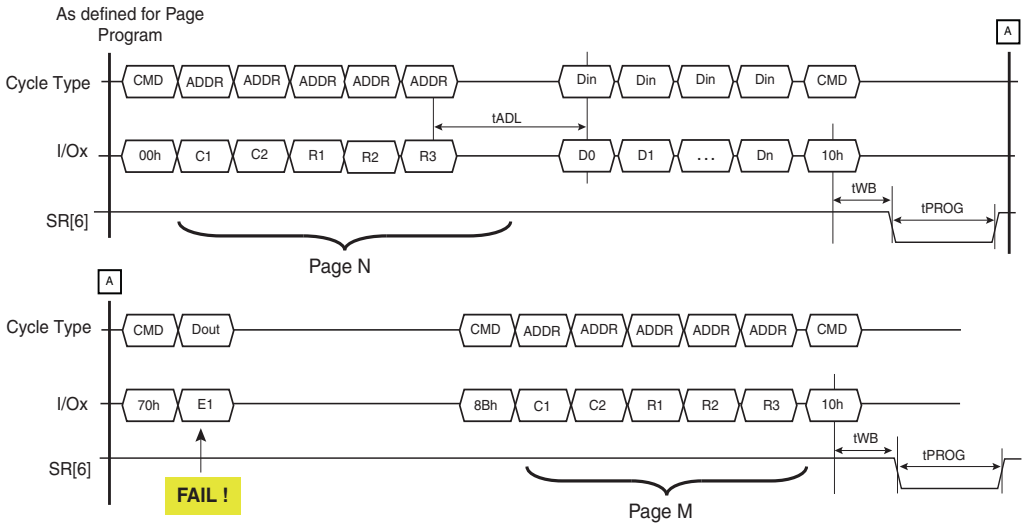

On the other hand, if the pattern bound for the target page is different from that of the previous page, data in cycles can be issued before program confirm '10h', as described in Figure 3.2.

Figure 3.2 Page Reprogram with Data Manipulation

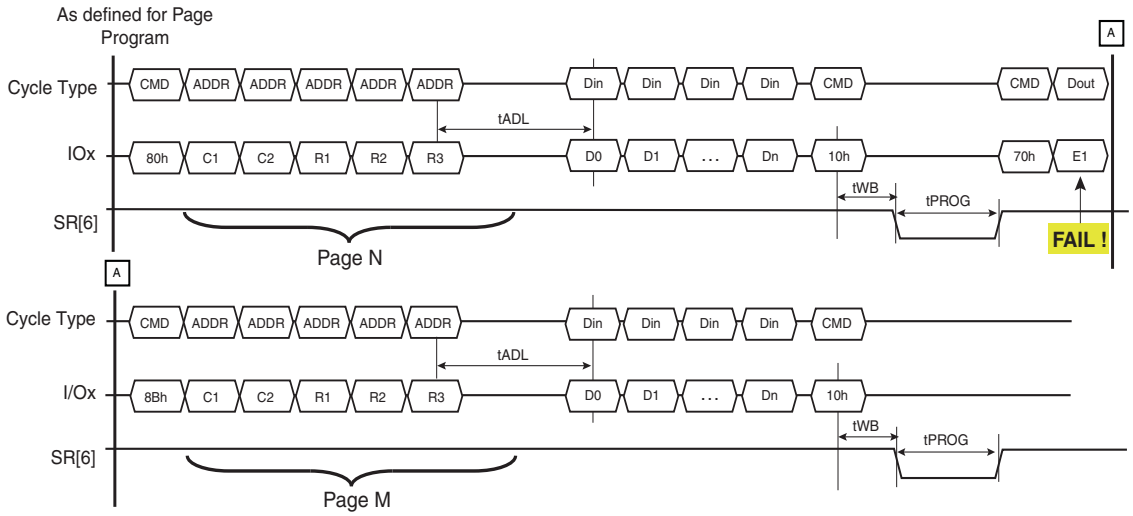

The device supports Random Data Input within a page. The column address of next data, which will be entered, may be changed to the address which follows the Random Data Input command (85h). Random Data Input may be operated multiple times regardless of how many times it is done in a page.

The Program Confirm command (10h) initiates the re-programming process. The internal write state controller automatically executes the algorithms and controls timings necessary for program and verify, thereby freeing the system controller for other tasks. Once the program process starts, the Read Status Register command may be issued to read the Status Register. The system controller can detect the completion of a program cycle by monitoring the R/B# output, or the Status bit (I/O6) of the Status Register. Only the Read Status command and Reset command are valid when programming is in progress. When the Page Program is complete, the Write Status Bit (I/O0) may be checked. The internal write verify detects only errors for 1's that are not successfully programmed to 0's. The command register remains in Read Status command mode until another valid command is written to the command register.

The Page Reprogram must be issued in the same plane as the Page Program that failed. In order to program the data to a different plane, use the Page Program operation instead. The Multiplane Page Reprogram can re-program two pages in parallel, one per plane. The Multiplane Page Reprogram operation is performed after a failed Multiplane Page Program operation. The command sequence is very similar to Figure 6.13 on page 44, except that it requires the Page Reprogram Command (8Bh) instead of 80h and 81h.

If a Page Reprogram operation is interrupted by hardware reset, power failure or other means, the host must ensure that the interrupted page is not used for further reading or programming operations until the next uninterrupted block erase is complete.

3.5 Block Erase

The Block Erase operation is done on a block basis. Block address loading is accomplished in three cycles (two cycles for S34MS01G1) initiated by an Erase Setup command (60h). Only the block address bits are valid while the page address bits are ignored.

The Erase Confirm command (D0h) following the block address loading initiates the internal erasing process. This two-step sequence of setup followed by the execution command ensures that memory contents are not accidentally erased due to external noise conditions.

At the rising edge of WE# after the erase confirm command input, the internal write controller handles erase and erase verify. Once the erase process starts, the Read Status Register commands (70h or 78h) may be issued to read the Status Register.

The system controller can detect the completion of an erase by monitoring the R/B# output, or the Status bit (I/O6) of the Status Register. Only the Read Status commands (70h or 78h) and Reset command are valid while erasing is in progress. When the erase operation is completed, the Write Status Bit (I/O0) may be checked. Figure 6.15 on page 45 details the sequence.

If a Block Erase operation is interrupted by hardware reset, power failure or other means, the host must ensure that the interrupted block is erased under continuous power conditions before that block can be trusted for further programming and reading operations.

3.6 Multiplane Block Erase — S34MS02G1 and S34MS04G1

Multiplane Block Erase allows the erase of two blocks in parallel, one block per memory plane.

The Block erase setup command (60h) must be repeated two times, followed by 1st and 2nd block address respectively (3 cycles each). As for block erase, D0h command makes embedded operation start. In this case, multiplane erase does not need any Dummy Busy Time between 1st and 2nd block insertion. See Table 5.7 on page 36 for performance information.

For the Multiplane Block Erase operation, the address of the first block must be within the first plane (PLA0 = 0) and the address of the second block in the second plane (PLA0 = 1). See Figure 6.16 on page 46 for a description of the legacy protocol. In this case, the block address bits for the first plane are all zero and the second address issued selects the block for both planes. Figure 6.17 on page 46 describes the sequences using the ONFI protocol. For both addresses issued in this protocol, the block address bits must be the same except for the bit(s) that select the plane.

The user can check operation status by monitoring R/B# pin or reading the Status Register (command 70h or 78h). The Read Status Register command is also available during Dummy Busy time (t_{DBSY}). In case of failure in either erase, the fail bit of the Status Register will be set. Refer to Section 3.9 on page 21 for further information.

If a Multiplane Block Erase operation is interrupted by hardware reset, power failure or other means, the host must ensure that the interrupted blocks are erased under continuous power conditions before those blocks can be trusted for further programming and reading operations.

3.7 Copy Back Program

The copy back feature is intended to quickly and efficiently rewrite data stored in one page without utilizing an external memory. Since the time-consuming cycles of serial access and re-loading cycles are removed, the system performance is greatly improved. The benefit is especially obvious when a portion of a block needs to be updated and the rest of the block also needs to be copied to the newly assigned free block. The operation for performing a copy back is a sequential execution of page-read (without mandatory serial access) and Copy Back Program with the address of destination page. A read operation with the ‘35h’ command and the address of the source page moves the whole page of data into the internal data register. As soon as the device returns to the Ready state, optional data read-out is allowed by toggling RE# (see Figure 6.18 on page 47), or the Copy Back Program command (85h) with the address cycles of the destination page may be written. The Program Confirm command (10h) is required to actually begin programming.

The source and the destination pages in the Copy Back Program sequence must belong to the same device plane (same PLA0 for S34MS02G1 and S34MS04G1). Copy Back Read and Copy Back Program for a given plane must be between odd address pages or between even address pages for the device to meet the program time (t_{PROG}) specification. Copy Back Program may not meet this specification when copying from an odd address page (source page) to an even address page (target page) or from an even address page (source page) to an odd address page (target page).

The data input cycle for modifying a portion or multiple distinct portions of the source page is allowed as shown in Figure 6.19 on page 47. As noted in Section 1. on page 3 the device may include an automatic EDC (for S34MS02G1 and S34MS04G1) check during the copy back operation, to detect single bit errors in EDC units contained within the source page. More details on EDC operation and limitations related to data input handling during one Copy Back Program sequence are available in Section 3.8 on page 19.

If a Copy Back Program operation is interrupted by hardware reset, power failure or other means, the host must ensure that the interrupted page is not used for further reading or programming operations until the next uninterrupted block erase is complete.

3.7.1 Multiplane Copy Back Program — S34MS02G1 and S34MS04G1

The device supports Multiplane Copy Back Program with exactly the same sequence and limitations as the Page Program. Multiplane Copy Back Program must be preceded by two single page Copy Back Read command sequences (1st page must be read from the 1st plane and 2nd page from the 2nd plane).

Multiplane Copy Back cannot cross plane boundaries — the contents of the source page of one device plane can be copied only to a destination page of the same plane. EDC check is available also for Multiplane Copy Back Program only for S34MS02G1 and S34MS04G1.

When "EDC check" is used in copy back, it must comply with some limitations related to data handling during one Multiplane Copy Back Program sequence. Please refer to Section 3.8 on page 19 for details on EDC operation. The Multiplane Copy Back Program sequence represented in Figure 6.20 on page 48 shows the legacy protocol. In this case, the block address bits for the first plane are all zero and the second address issued selects the block for both planes. Figure 6.21 on page 49 describes the sequence using the ONFI protocol. For both addresses issued in this protocol, the block address bits must be the same except for the bit(s) that select the plane.

If a Multiplane Copy Back Program operation is interrupted by hardware reset, power failure or other means, the host must ensure that the interrupted pages are not used for further reading or programming operations until the next uninterrupted block erases are complete for the applicable blocks.

3.7.2 Special Read for Copy Back — S34MS02G1 and S34MS04G1

The S34MS02G1 and S34MS04G1 devices support Special Read for Copy Back. If Copy Back Read (described in Section 3.7 and Section 3.7.1 on page 19) is triggered with confirm command '36h' instead '35h', Copy Back Read from target page(s) will be executed with an increased internal (V_{PASS}) voltage.

This special feature is used in order to minimize the number of read errors due to over-program or read disturb — it shall be used only if ECC read errors have occurred in the source page using Page Read or Copy Back Read sequences.

Excluding the Copy Back Read confirm command, all other features described in Section 3.7 and Section 3.7.1 for standard copy back remain valid (including the figures referred to in those sections).

3.8 EDC Operation — S34MS02G1 and S34MS04G1

Error Detection Code check is a feature that can be used during the copy back operation (both single and multiplane) to detect single bit errors occurring in the source page(s).

Note: The S34MS01G1 device does not support EDC.

- EDC check allows detection of up to 1 single bit error every 528 bytes, where each 528 byte group is composed of 512 bytes of main array and 16 bytes of spare area (see Table 3.3 and Table 3.4 on page 20). The described 528-byte area is called an "EDC unit."
- In the x16 device, EDC allows detection of up to 1 single bit error every 264 words, where each 264 word group is composed by 256 words of main array and 8 words of spare area see Table 3.3 and Table 3.4 on page 20). The described 264-word area is called "EDC unit."

EDC results can be checked through a specific Read EDC register command, available only after issuing a Copy Back Program or a Multiplane Copy Back Program. The EDC register can be queried during the copy back program busy time (t_{PROG}).

For the "EDC check" feature to operate correctly, specific conditions on data input handling apply for program operations.

For the case of Page Program, Multiplane Page Program, Page Reprogram, Multiplane Page Reprogram, Cache Program, and Multiplane Cache Program operations:

- In Section 3.2 on page 15 it was explained that a number of consecutive partial program operations (NOP) is allowed within the same page. In case this feature is used, the number of partial program operations occurring in the same EDC unit must not exceed 1. In other words, page program operations must be performed on the whole page, or on whole EDC unit at a time.
- "Random Data Input" in a given EDC unit can be executed several times during one page program sequence, but data cannot be written to any column address more than once before the program is initiated.

For the case of Copy Back Program or Multiplane Copy Back Program operations:

- If Random Data Input is applied in a given EDC unit, the entire EDC unit must be written to the page buffer. In other words, the EDC check is possible only if the whole EDC unit is modified during one Copy Back Program sequence.
- "Random Data Input" in a given EDC unit can be executed several times during one Copy Back Program sequence, but data insertion in each column address of the EDC unit must not exceed 1.

If you use copy back without EDC check, none of the limitations described above apply.

After a Copy Back Program operation, the host can use Read EDC Status Register to check the status of both the program operation and the Copy Back Read. If the EDC was valid and an error was reported in the EDC (see Table 3.2 on page 20), the host may perform Special Read For Copy Back on the source page and attempt the Copy Back Program again. If this also fails, the host can execute a Page Read operation in order to correct a single bit error with external ECC software or hardware.

3.8.1 Read EDC Status Register — S34MS02G1 and S34MS04G1

This operation is available only after issuing a Copy Back Program and it allows the detection of errors during Copy Back Read. In the case of multiplane copy back, it is not possible to know which of the two read operations caused the error.

After writing the Read EDC Status Register command (7Bh) to the command register, a read cycle outputs the content of the EDC Register to the I/O pins on the falling edge of CE# or RE#, whichever occurs last.

The operation is the same as the Read Status Register command. Refer to Table 3.2 for specific EDC Register definitions:

Table 3.2 EDC Register Coding

ID	Copy Back Program	Coding
0	Pass / Fail	Pass: 0; Fail: 1
1	EDC status	No error: 0; Error: 1
2	EDC validity	Invalid: 0; Valid: 1
3	NA	—
4	NA	—
5	Ready / Busy	Busy: 0; Ready: 1
6	Ready / Busy	Busy: 0; Ready: 1
7	Write Protect	Protected: 0; Not Protected: 1

Table 3.3 Page Organization in EDC Units

Main Field (2048 Byte)				Spare Field (64 Byte)			
"A" area (1st sector)	"B" area (2nd sector)	"C" area (3rd sector)	"D" area (4th sector)	"E" area (1st sector)	"F" area (2nd sector)	"G" area (3rd sector)	"H" area (4th sector)
×8							
512 byte	512 byte	512 byte	512 byte	16 byte	16 byte	16 byte	16 byte
×16							
256 words	256 words	256 words	256 words	8 words	8 words	8 words	8 words

Table 3.4 Page Organization in EDC Units by Address

Sector	Main Field (Column 0-2047)		Spare Field (Column 2048-2111)	
	Area Name	Column Address	Area Name	Column Address
×8				
1st 528-byte Sector	A	0-511	E	2048-2063
2nd 528-byte Sector	B	512-1023	F	2064-2079
3rd 528-byte Sector	C	1024-1535	G	2080-2095

Table 3.4 Page Organization in EDC Units by Address

Sector	Main Field (Column 0-2047)		Spare Field (Column 2048-2111)	
	Area Name	Column Address	Area Name	Column Address
×8				
4th 528-byte Sector	D	1536-2047	H	2096-2111
×16				
1st 256-word Sector	A	0-255	E	1024-1031
2nd 256-word Sector	B	256-511	F	1032-1039
3rd 256-word Sector	C	512-767	G	1040-1047
4th 256-word Sector	D	768-1023	H	1048-1055

3.9 Read Status Register

The Status Register is used to retrieve the status value for the last operation issued. After writing 70h command to the command register, a read cycle outputs the content of the Status Register to the I/O pins on the falling edge of CE# or RE#, whichever occurs last. This two-line control allows the system to poll the progress of each device in multiple memory connections even when R/B# pins are common-wired. Refer to Section 3.5 on page 22 for specific Status Register definition, and to Figure 6.22 on page 49 for timings.

If the Read Status Register command is issued during multiplane operations then Status Register polling will return the combined status value related to the outcome of the operation in the two planes according to the following table:

Status Register Bit	Composite Status Value
Bit 0, Pass/Fail	OR
Bit 1, Cache Pass/Fail	OR

In other words, the Status Register is dynamic; the user is not required to toggle RE# / CE# to update it.

The command register remains in Status Read mode until further commands are issued. Therefore, if the Status Register is read during a random read cycle, the read command (00h) must be issued before starting read cycles.

Note: The Read Status Register command shall not be used for concurrent operations in multi-die stack configurations (single CE#). “Read Status Enhanced” shall be used instead.

3.10 Read Status Enhanced — S34MS02G1 and S34MS04G1

Read Status Enhanced is used to retrieve the status value for a previous operation in the specified plane.

Figure 6.23 on page 50 defines the Read Status Enhanced behavior and timings. The plane and die address must be specified in the command sequence in order to retrieve the status of the die and the plane of interest.

Refer to Table 3.5 for specific Status Register definitions. The command register remains in Status Read mode until further commands are issued.

The Status Register is dynamic; the user is not required to toggle RE# / CE# to update it.

3.11 Read Status Register Field Definition

Table 3.5 below lists the meaning of each bit of the Read Status Register and Read Status Enhanced (S34MS02G1 and S34MS04G1).

Table 3.5 Status Register Coding

ID	Page Program / Page Reprogram	Block Erase	Read	Read Cache	Cache Program / Cache Reprogram	Coding
0	Pass / Fail	Pass / Fail	NA	NA	Pass / Fail	N Page Pass: 0 Fail: 1
1	NA	NA	NA	NA	Pass / Fail	N - 1 Page Pass: 0 Fail: 1
2	NA	NA	NA	NA	NA	—
3	NA	NA	NA	NA	NA	—
4	NA	NA	NA	NA	NA	—
5	Ready / Busy	Ready / Busy	Ready / Busy	Ready / Busy	Ready / Busy	Internal Data Operation Active: 0 Idle: 1
6	Ready / Busy	Ready / Busy	Ready / Busy	Ready / Busy	Ready / Busy	Ready / Busy Busy: 0 Ready: 1
7	Write Protect	Write Protect	NA	NA	Write Protect	Protected: 0 Not Protected: 1

3.12 Reset

The Reset feature is executed by writing FFh to the command register. If the device is in the Busy state during random read, program, or erase mode, the Reset operation will abort these operations. The contents of memory cells being altered are no longer valid, as the data may be partially programmed or erased. The command register is cleared to wait for the next command, and the Status Register is cleared to value E0h when WP# is high or value 60h when WP# is low. If the device is already in reset state a new Reset command will not be accepted by the command register. The R/B# pin transitions to low for t_{RST} after the Reset command is written. Refer to Figure 6.24 on page 50 for further details. The Status Register can also be read to determine the status of a Reset operation.

3.13 Read Cache

Read Cache can be used to increase the read operation speed, as defined in Section 3.1 on page 15, and it cannot cross a block boundary. As soon as the user starts to read one page, the device automatically loads the next page into the cache register. Serial data output may be executed while data in the memory is read into the cache register. Read Cache is initiated by the Page Read sequence (00-30h) on a page M.

After random access to the first page is complete (R/B# returned to high, or Read Status Register I/O6 switches to high), two command sequences can be used to continue read cache:

- Read Cache (command ‘31h’ only): once the command is latched into the command register (see Figure 6.26 on page 51), device goes busy for a short time (t_{CBSYR}), during which data of the first page is transferred from the data register to the cache register. At the end of this phase, the cache register data can be output by toggling RE# while the next page (page address M+1) is read from the memory array into the data register.
- Read Cache Enhanced (sequence ‘00h’ <page N address> ‘31’): once the command is latched into the command register (see Figure 6.27 on page 52), device goes busy for a short time (t_{CBSYR}), during which data of the first page is transferred from the data register to the cache register. At the end of this phase, cache register data can be output by toggling RE# while page N is read from the memory array into the data register.

Note: The S34MS01G1 device does not support Read Cache Enhanced.

Subsequent pages are read by issuing additional Read Cache or Read Cache Enhanced command sequences. If serial data output time of one page exceeds random access time (t_R), the random access time of the next page is hidden by data downloading of the previous page.

On the other hand, if 31h is issued prior to completing the random access to the next page, the device will stay busy as long as needed to complete random access to this page, transfer its contents into the cache register, and trigger the random access to the following page.

To terminate the Read Cache operation, 3Fh command should be issued (see Figure 6.28 on page 52). This command transfers data from the data register to the cache register without issuing next page read.

During the Read Cache operation, the device doesn't allow any other command except for 00h, 31h, 3Fh, Read SR, or Reset (FFh). To carry out other operations, Read Cache must be terminated by the Read Cache End command (3Fh) or the device must be reset by issuing FFh.

Read Status command (70h) may be issued to check the status of the different registers and the busy/ready status of the cached read operations.

- The Cache-Busy status bit I/O6 indicates when the cache register is ready to output new data.
- The status bit I/O5 can be used to determine when the cell reading of the current data register contents is complete.

Note: The Read Cache and Read Cache End commands reset the column counter, thus, when RE# is toggled to output the data of a given page, the first output data is related to the first byte of the page (column address 00h). Random Data Output command can be used to switch column address.

3.14 Cache Program

Cache Program can improve the program throughput by using the cache register. The Cache Program operation cannot cross a block boundary. The cache register allows new data to be input while the previous data that was transferred to the data register is programmed into the memory array.

After the serial data input command (80h) is loaded to the command register, followed by five cycles of address, a full or partial page of data is latched into the cache register.

Once the cache write command (15h) is loaded to the command register, the data in the cache register is transferred into the data register for cell programming. At this time the device remains in the Busy state for a short time (t_{CBSYW}). After all data of the cache register is transferred into the data register, the device returns to the Ready state and allows loading the next data into the cache register through another Cache Program command sequence (80h-15h).

The Busy time following the first sequence 80h - 15h equals the time needed to transfer the data from the cache register to the data register. Cell programming the data of the data register and loading of the next data into the cache register is consequently processed through a pipeline model.

In case of any subsequent sequence 80h - 15h, transfer from the cache register to the data register is held off until cell programming of current data register contents is complete; till this moment the device will stay in a busy state (t_{CBSYW}).

Read Status commands (70h or 78h) may be issued to check the status of the different registers, and the pass/fail status of the cached program operations.

- The Cache-Busy status bit I/O6 indicates when the cache register is ready to accept new data.
- The status bit I/O5 can be used to determine when the cell programming of the current data register contents is complete.
- The Cache Program error bit I/O1 can be used to identify if the previous page (page N-1) has been successfully programmed or not in a Cache Program operation. The status bit is valid upon I/O6 status bit changing to 1.
- The error bit I/O0 is used to identify if any error has been detected by the program/erase controller while programming page N. The status bit is valid upon I/O5 status bit changing to 1.

I/O1 may be read together with I/O0.

If the system monitors the progress of the operation only with R/B#, the last page of the target program sequence must be programmed with Page Program Confirm command (10h). If the Cache Program command (15h) is used instead, the status bit I/O5 must be polled to find out if the last programming is finished before starting any other operation. See Table 3.5 on page 22 and Figure 6.29 on page 53 for more details.

If a Cache Program operation is interrupted by hardware reset, power failure or other means, the host must ensure that the interrupted pages are not used for further reading or programming operations until the next uninterrupted block erases are complete for the applicable blocks.

3.15 Multiplane Cache Program — S34MS02G1 and S34MS04G1

The Multiplane Cache Program enables high program throughput by programming two pages in parallel, while exploiting the data and cache registers of both planes to implement cache.

The command sequence can be summarized as follows:

- Serial Data Input command (80h), followed by the five cycle address inputs and then serial data for the 1st page. Address for this page must be within 1st plane (PLA0 = 0). The data of 1st page other than those to be programmed do not need to be loaded. The device supports Random Data Input exactly like Page Program operation.
- The Dummy Page Program Confirm command (11h) stops 1st page data input and the device becomes busy for a short time (t_{DBSY}).
- Once device returns to ready again, 81h command must be issued, followed by 2nd page address (5 cycles) and its serial data input. Address for this page must be within 2nd plane (PLA0 = 1). The data of 2nd page other than those to be programmed do not need to be loaded.
- Cache Program confirm command (15h). Once the cache write command (15h) is loaded to the command register, the data in the cache registers is transferred into the data registers for cell programming. At this time the device remains in the Busy state for a short time (t_{CBSYW}). After all data from the cache registers are transferred into the data registers, the device returns to the Ready state, and allows loading the next data into the cache register through another Cache Program command sequence.

The sequence 80h-...- 11h...-...81h...-...15h can be iterated, and each time the device will be busy for the t_{CBSYW} time needed to complete programming the current data register contents, and transferring the new data from the cache registers. The sequence to end Multiplane Cache Program is 80h-...- 11h...-...81h...-...10h.

The Multiplane Cache Program is available only within two paired blocks in separate planes. Figure 6.30 on page 54 shows the legacy protocol for the Multiplane Cache Program operation. In this case, the block address bits for the first plane are all zero and the second address issued selects the block for both planes. Figure 6.31 on page 55 shows the ONFI protocol for the Multiplane Cache Program operation. For both addresses issued in this protocol, the block address bits must be the same except for the bit(s) that select the plane.

The user can check operation status by R/B# pin or Read Status Register commands (70h or 78h). If the user opts for 70h, Read Status Register will provide “global” information about the operation in the two planes.

- I/O6 indicates when both cache registers are ready to accept new data.
- I/O5 indicates when the cell programming of the current data registers is complete.
- I/O1 identifies if the previous pages in both planes (pages N-1) have been successfully programmed or not. This status bit is valid upon I/O6 status bit changing to 1.
- I/O0 identifies if any error has been detected by the program/erase controller while programming the two pages N. This status bit is valid upon I/O5 status bit changing to 1.

See Table 3.5 on page 22 for more details.

If the system monitors the progress of the operation only with R/B#, the last pages of the target program sequence must be programmed with Page Program Confirm command (10h). If the Cache Program command (15h) is used instead, the status bit I/O5 must be polled to find out if the last programming is finished before starting any other operation. Refer to Section 3.9 on page 21 for further information.

If a Multiplane Cache Program operation is interrupted by hardware reset, power failure or other means, the host must ensure that the interrupted pages are not used for further reading or programming operations until the next uninterrupted block erases are complete for the applicable blocks.

3.16 Read ID

The device contains a product identification mode, initiated by writing 90h to the command register, followed by an address input of 00h.

Note: If you want to execute Read Status command (0x70) after Read ID sequence, you should input dummy command (0x00) before Read Status command (0x70).

For the S34MS02G1 and S34MS04G1 devices, five read cycles sequentially output the manufacturer code (01h), and the device code and 3rd, 4th, and 5th cycle ID, respectively. For the S34MS01G1 device, four read cycles sequentially output the manufacturer code (01h), and the device code and 80h, 4th cycle ID, respectively. The command register remains in Read ID mode until further commands are issued to it. Figure 6.32 on page 56 shows the operation sequence, while Table 3.6 to Table 3.11 explain the byte meaning.

Table 3.6 Read ID for Supported Configurations

Density	Org	V_{CC}	1st	2nd	3rd	4th	5th
1 Gb	×8	1.8 V	01h	A1h	00h	15h	—
2 Gb			01h	AAh	90h	15h	44h
4 Gb			01h	ACh	90h	15h	54h
1 Gb	×16		01h	B1h	00h	55h	—
2 Gb			01h	BAh	90h	55h	44h
4 Gb			01h	BCh	90h	55h	54h

Table 3.7 Read ID Bytes

Device Identifier Byte	Description
1st	Manufacturer Code
2nd	Device Identifier
3rd	Internal chip number, cell type, etc.
4th	Page Size, Block Size, Spare Size, Serial Access Time, Organization
5th **(S34MS02G1, S34MS04G1)**	ECC, Multiplane information

3rd ID Data

Table 3.8 Read ID Byte 3 Description

	Description	I/O7	I/O6	I/O5 I/O4	I/O3 I/O2	I/O1 I/O0
Internal Chip Number	1 2 4 8					0 0 0 1 1 0 1 1
Cell type	2-level cell 4-level cell 8-level cell 16-level cell				0 0 0 1 1 0 1 1	
Number of simultaneously programmed pages	1 2 4 8			0 0 0 1 1 0 11		
Interleave program Between multiple chips	Not supported Supported		0 1			
Cache Program	Not supported Supported	0 1				

4th ID Data

Table 3.9 Read ID Byte 4 Description — S34MS01G1

	Description	I/O7	I/O6	I/O5 I/O4	I/O3	I/O2	I/O1 I/O0
Page Size (without spare area)	1 kB 2 kB 4 kB 8 kB						0 0 0 1 1 0 1 1
Block Size (without spare area)	64 kB 128 kB 256 kB 512 kB			0 0 0 1 1 0 1 1			
Spare Area Size (byte / 512 byte)	8 16					0 1	
Serial Access Time	45 ns 25 ns Reserved Reserved	0 0 1 1			0 1 0 1		
Organization	×8		0				
	×16		1				

Table 3.10 Read ID Byte 4 Description — S34MS02G1 and S34MS04G1

	Description	I/O7	I/O6	I/O5 I/O4	I/O3	I/O2	I/O1 I/O0
Page Size (without spare area)	1 kB						0 0
	2 kB						0 1
	4 kB						1 0
	8 kB						1 1
Block Size (without spare area)	64 kB			0 0			
	128 kB			0 1			
	256 kB			1 0			
	512 kB			1 1			
Spare Area Size (byte / 512 byte)	8					0	
	16					1	
Serial Access Time	50 ns / 30 ns	0			0		
	25 ns	1			0		
	Reserved	0			1		
	Reserved	1			1		
Organization	×8		0				
	×16		1				

5th ID Data

Table 3.11 Read ID Byte 5 Description — S34MS02G1 and S34MS04G1

	Description	I/O7	I/O6 I/O5 I/O4	I/O3 I/O2	I/O1	I/O0
Plane Number	1			0 0		
	2			0 1		
	4			1 0		
	8			1 1		
Plane Size (without spare area)	64 Mb		0 0 0			
	128 Mb		0 0 1			
	256 Mb		0 1 0			
	512 Mb		0 1 1			
	1 Gb		1 0 0			
	2 Gb		1 0 1			
	4 Gb		1 1 0			
Reserved		0			0	0

3.17 Read ID2

The device contains an alternate identification mode, initiated by writing 30h-65h-00h to the command register, followed by address inputs, followed by command 30h. The address for S34MS01G1 will be
00h-02h-02h-00h. The address for S34MS02G1 and S34MS04G1 will be 00h-02h-02h-00h-00h. The ID2 data can then be read from the device by pulsing RE#. The command register remains in Read ID2 mode until further commands are issued to it. Figure 6.33 on page 56 shows the Read ID2 command sequence. Read ID2 values are all 0xFs, unless specific values are requested when ordering from Cypress.

3.18 Read ONFI Signature

To retrieve the ONFI signature, the command 90h together with an address of 20h shall be entered (i.e. it is not valid to enter an address of 00h and read 36 bytes to get the ONFI signature). The ONFI signature is the ASCII encoding of 'ONFI' where 'O' = 4Fh, 'N' = 4Eh, 'F' = 46h, and 'I' = 49h. Reading beyond four bytes yields indeterminate values. Figure 6.34 on page 57 shows the operation sequence.

3.19 Read Parameter Page

The device supports the ONFI Read Parameter Page operation, initiated by writing ECh to the command register, followed by an address input of 00h. The host may monitor the R/B# pin or wait for the maximum data transfer time (t_R) before reading the Parameter Page data. The command register remains in Parameter Page mode until further commands are issued to it. If the Status Register is read to determine when the data is ready, the Read Command (00h) must be issued before starting read cycles. Figure 6.35 on page 57 shows the operation sequence, while Table 3.12 explains the parameter fields.

For x16 devices, the upper eight I/Os are not used and are 0xFF.

Note: For 41 nm 2 Gb/4 Gb Cypress NAND, for a particular condition, the Read Parameter Page command does not give the correct values. To overcome this issue, the host must issue a Reset command before the Read Parameter Page command. Issuance of Reset before the Read Parameter Page command will provide the correct values and will not output 00h values. This does not apply to 48 nm 1 Gb.

Table 3.12 Parameter Page Description (Sheet 1 of 3)

Byte	O/M	Description	Values
Revision Information and Features Block			
0-3	M	Parameter page signature Byte 0: 4Fh, “O” Byte 1: 4Eh, “N” Byte 2: 46h, “F” Byte 3: 49h, “I”	4Fh, 4Eh, 46h, 49h
4-5	M	Revision number 2-15 Reserved (0) 1 1 = supports ONFI version 1.0 0 Reserved (0)	02h, 00h
6-7	M	Features supported 5-15 Reserved (0) 4 1 = supports odd to even page Copyback 3 1 = supports interleaved operations 2 1 = supports non-sequential page programming 1 1 = supports multiple LUN operations 0 1 = supports 16-bit data bus width	S34MS01G100 **(×8)**: 14h, 00h S34MS02G100 **(×8)**: 1Ch, 00h S34MS04G100 **(×8)**: 1Ch, 00h S34MS01G104 **(×16)**: 15h, 00h S34MS02G104 **(×16)**: 1Dh, 00h S34MS04G104 **(×16)**: 1Dh, 00h
8-9	M	Optional commands supported 6-15 Reserved (0) 5 1 = supports Read Unique ID 4 1 = supports Copyback 3 1 = supports Read Status Enhanced 2 1 = supports Get Features and Set Features 1 1 = supports Read Cache commands 0 1 = supports Page Cache Program command	S34MS01G1: 13h, 00h S34MS02G1: 1Bh, 00h S34MS04G1: 1Bh, 00h
10-31		Reserved (0)	00h
Manufacturer Information Block			
32-43	M	Device manufacturer (12 ASCII characters)	53h, 50h, 41h, 4Eh, 53h, 49h, 4Fh, 4Eh, 20h, 20h, 20h, 20h
44-63	M	Device model (20 ASCII characters)	S34MS01G1: 53h, 33h, 34h, 4Dh, 53h, 30h, 31h, 47h, 31h, 20h, 20h, 20h, 20h, 20h, 20h, 20h, 20h, 20h, 20h, 20h S34MS02G1: 53h, 33h, 34h, 4Dh, 53h, 30h, 32h, 47h, 31h, 20h, 20h, 20h, 20h, 20h, 20h, 20h, 20h, 20h, 20h, 20h S34MS04G1: 53h, 33h, 34h, 4Dh, 53h, 30h, 34h, 47h, 31h, 20h, 20h, 20h, 20h, 20h, 20h, 20h, 20h, 20h, 20h, 20h
64	M	JEDEC manufacturer ID	01h
65-66	O	Date code	00h

Table 3.12 Parameter Page Description (Sheet 2 of 3)

Byte	O/M	Description	Values
67-79		Reserved (0)	00h
Memory Organization Block			
80-83	M	Number of data bytes per page	00h, 08h, 00h, 00h
84-85	M	Number of spare bytes per page	40h, 00h
86-89	M	Number of data bytes per partial page	00h, 02h, 00h, 00h
90-91	M	Number of spare bytes per partial page	10h, 00h
92-95	M	Number of pages per block	40h, 00h, 00h, 00h
96-99	M	Number of blocks per logical unit (LUN)	S34MS01G1: 00h, 04h, 00h, 00h S34MS02G1: 00h, 08h, 00h, 00h S34MS04G1: 00h, 10h, 00h, 00h
100	M	Number of logical units (LUNs)	01h
101	M	Number of address cycles 4-7 Column address cycles 0-3 Row address cycles	S34MS01G1: 22h S34MS02G1: 23h S34MS04G1: 23h
102	M	Number of bits per cell	01h
103-104	M	Bad blocks maximum per LUN	S34MS01G1: 14h, 00h S34MS02G1: 28h, 00h S34MS04G1: 50h, 00h
105-106	M	Block endurance	01h, 05h
107	M	Guaranteed valid blocks at beginning of target	01h
108-109	M	Block endurance for guaranteed valid blocks	01h, 03h
110	M	Number of programs per page	04h
111	M	Partial programming attributes 5-7 Reserved 4 1 = partial page layout is partial page data followed by partial page spare 1-3 Reserved 0 1 = partial page programming has constraints	00h
112	M	Number of bits ECC correctability	01h
113	M	Number of interleaved address bits 4-7 Reserved (0) 0-3 Number of interleaved address bits	S34MS01G1: 00h S34MS02G1: 01h S34MS04G1: 01h
114	O	Interleaved operation attributes 4-7 Reserved (0) 3 Address restrictions for program cache 2 1 = program cache supported 1 1 = no block address restrictions 0 Overlapped / concurrent interleaving support	S34MS01G1: 00h S34MS02G1: 04h S34MS04G1: 04h
115-127		Reserved (0)	00h
Electrical Parameters Block			
128	M	I/O pin capacitance	0Ah
129-130	M	Timing mode support 6-15 Reserved (0) 5 1 = supports timing mode 5 4 1 = supports timing mode 4 3 1 = supports timing mode 3 2 1 = supports timing mode 2 1 1 = supports timing mode 1 0 1 = supports timing mode 0, shall be 1	03h, 00h

Table 3.12 Parameter Page Description (Sheet 3 of 3)

Byte	O/M	Description	Values
131-132	O	Program cache timing mode support 6-15 Reserved (0) 5 1 = supports timing mode 5 4 1 = supports timing mode 4 3 1 = supports timing mode 3 2 1 = supports timing mode 2 1 1 = supports timing mode 1 0 1 = supports timing mode 0	03h, 00h
133-134	M	t_{PROG} Maximum page program time (µs)	BCh, 02h
135-136	M	t_{BERS} Maximum block erase time (µs)	S34MS01G1: B8h, 0Bh S34MS02G1: 10h, 27h S34MS04G1: 10h, 27h
137-138	M	t_R Maximum page read time (µs)	19h, 00h
139-140	M	t_{CCS} Minimum Change Column setup time (ns)	64h, 00h
141-163		Reserved (0)	00h
Vendor Block			
164-165	M	Vendor specific Revision number	00h
166-253		Vendor specific	00h
254-255	M	Integrity CRC	S34MS01G100 **(×8)**: 81h, 4Fh S34MS02G100 **(×8)**: 45h, E9h S34MS04G100 **(×8)**: 3Bh, A2h S34MS01G104 **(×16)**: F3h, 39h S34MS02G104 **(×16)**: 37h, 9Fh S34MS04G104 **(×16)**: 49h, D4h
Redundant Parameter Pages			
256-511	M	Value of bytes 0-255	Repeat Value of bytes 0-255
512-767	M	Value of bytes 0-255	Repeat Value of bytes 0-255
768+	O	Additional redundant parameter pages	FFh

Note:
1. O" Stands for Optional, "M" for Mandatory.

3.20 One-Time Programmable (OTP) Entry

The device contains a one-time programmable (OTP) area, which is accessed by writing 29h-17h-04h-19h to the command register. The device is then ready to accept Page Read and Page Program commands (refer to *Page Read* and *Page Program* on page 15). The OTP area is of a single erase block size (64 pages), and hence only row addresses between 00h and 3Fh are allowed. The host must issue the Reset command (refer to *Reset* on page 22) to exit the OTP area and access the normal flash array. The Block Erase command is not allowed in the OTP area. Refer to Figure 6.36 on page 58 for more detail on the OTP Entry command sequence.

Note: The OTP feature in the S34MS01G1 does not have nonvolatile protection.

4. Signal Descriptions

4.1 Data Protection and Power On / Off Sequence

The device is designed to offer protection from any involuntary program/erase during power-transitions. An internal voltage detector disables all functions whenever V_{CC} is below about 1.1V.

The power-up and power-down sequence is shown in Figure 6.37 on page 58, in this case V_{CC} and V_{CCQ} on the one hand (and V_{SS} and V_{SSQ} on the other hand) are shorted together at all times.

The Ready/Busy signal shall be valid within 100 µs after the power supplies have reached the minimum values (as specified on), and shall return to one within 5 ms (max).

During this busy time, the device executes the initialization process (cam reading), and dissipates a current I_{CC0} (30 mA max), in addition, it disregards all commands excluding Read Status Register (70h).

At the end of this busy time, the device defaults into “read setup”, thus if the user decides to issue a page read command, the 00h command may be skipped.

The WP# pin provides hardware protection and is recommended to be kept at V_{IL} during power-up and power-down. A recovery time of minimum 100 µs is required before the internal circuit gets ready for any command sequences as shown in Figure 6.37 on page 58. The two-step command sequence for program/erase provides additional software protection.

4.2 Ready/Busy

The Ready/Busy output provides a method of indicating the completion of a page program, erase, copyback, or read completion. The R/B# pin is normally high and goes to low when the device is busy (after a reset, read, program, or erase operation). It returns to high when the internal controller has finished the operation. The pin is an open-drain driver thereby allowing two or more R/B# outputs to be Or-tied. Because the pull-up resistor value is related to t_r (R/B#) and the current drain during busy (ibusy) and output load capacitance is related to t_f, an appropriate value can be obtained with the reference chart shown in Figure 4.1.

Figure 4.1 Ready/Busy Pin Electrical Application

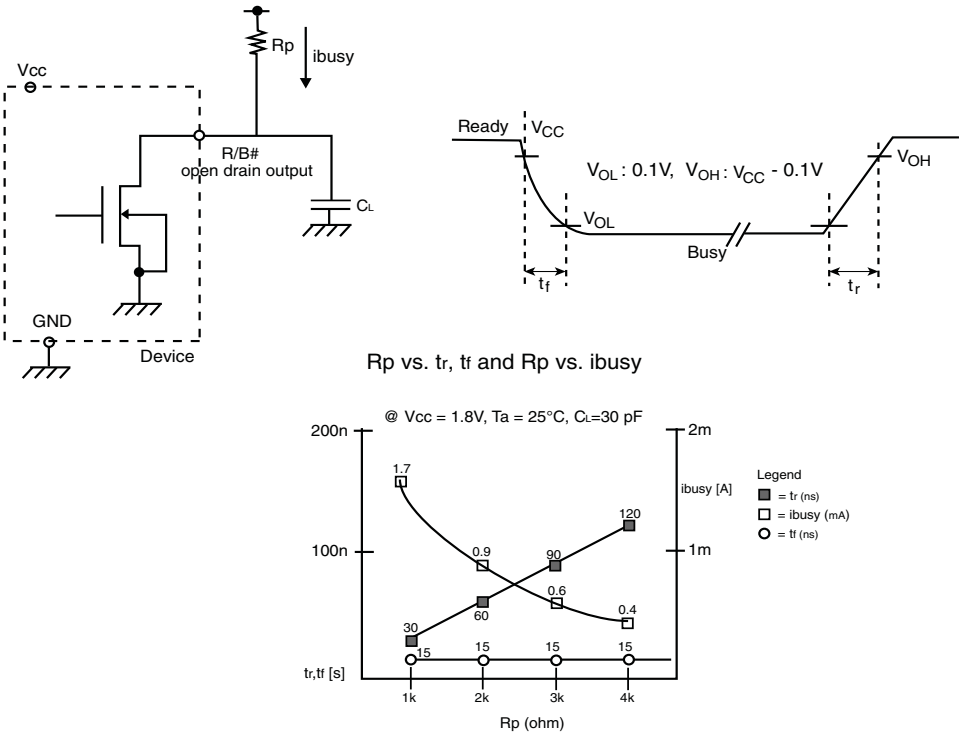

Rp value guidence

$$Rp\ (min.) = \frac{Vcc\ (Max.) - V_{OL}\ (Max.)}{I_{OL} + \sum I_L} = \frac{1.85V}{3mA + \sum I_L}$$

where I_L is the sum of the input currents of all devices tied to the R/B# pin.
Rp(max) is determined by maximum permissible limit of tr.

4.3 Write Protect Operation

Erase and program operations are aborted if WP# is driven low during busy time, and kept low for about 100 ns. Switching WP# low during this time is equivalent to issuing a Reset command (FFh). The contents of memory cells being altered are no longer valid, as the data will be partially programmed or erased. The R/B# pin will stay low for t_{RST} (similarly to Figure 6.24 on page 50). At the end of this time, the command register is ready to process the next command, and the Status Register bit I/O6 will be cleared to 1, while I/O7 value will be related to the WP# value. Refer to Table 3.5 on page 22 for more information on device status.

Erase and program operations are enabled or disabled by setting WP# to high or low respectively, prior to issuing the setup commands (80h or 60h). The level of WP# shall be set t_{WW} ns prior to raising the WE# pin for the set up command, as explained in Figure 6.38 and Figure 6.39 on page 59.

Figure 4.2 WP# Low Timing Requirements during Program/Erase Command Sequence

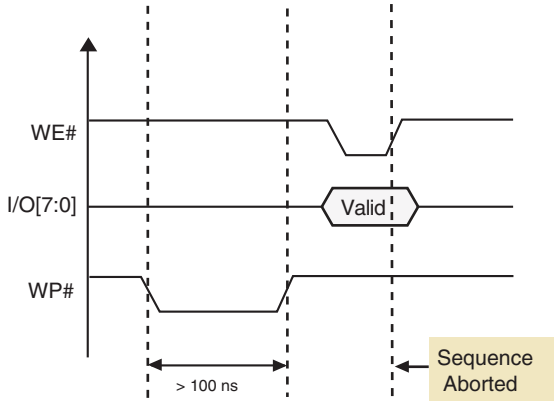

5. Electrical Characteristics

5.1 Valid Blocks

Table 5.1 Valid Blocks

Device	Symbol	Min	Typ	Max	Unit
S34MS01G1	N_{VB}	1004	—	1024	Blocks
S34MS02G1	N_{VB}	2008	—	2048	Blocks
S34MS04G1	N_{VB}	4016	—	4096	Blocks

5.2 Absolute Maximum Ratings

Table 5.2 Absolute Maximum Ratings

Parameter	Symbol	Value	Unit
Ambient Operating Temperature (Industrial Temperature Range)	T_A	-40 to +85	°C
Temperature under Bias	T_{BIAS}	-50 to +125	°C
Storage Temperature	T_{STG}	-65 to +150	°C
Input or Output Voltage	V_{IO} (2)	-0.6 to +2.7	V
Supply Voltage	V_{CC}	-0.6 to +2.7	V

Notes:

1. *Except for the rating "Operating Temperature Range", stresses above those listed in the table Absolute Maximum Ratings "Absolute Maximum Ratings" may cause permanent damage to the device. These are stress ratings only and operation of the device at these or any other conditions above those indicated in the Operating sections of this specification is not implied. Exposure to Absolute Maximum Rating conditions for extended periods may affect device reliability.*
2. *Minimum Voltage may undershoot to -2V during transition and for less than 20 ns during transitions.*
3. *Maximum Voltage may overshoot to V_{CC} +2.0V during transition and for less than 20 ns during transitions.*

5.3 AC Test Conditions

Table 5.3 AC Test Conditions

Parameter	Value
Input Pulse Levels	0.0 V to V_{CC}
Input Rise And Fall Times	5 ns
Input And Output Timing Levels	V_{CC} / 2
Output Load (1.7V - 1.95V)	1 TTL Gate and C_L = 30 pF

5.4 AC Characteristics

Table 5.4 AC Characteristics

Parameter	Symbol	Min	Max	Unit
ALE to RE# delay	t_{AR}	10	—	ns
ALE hold time	t_{ALH}	10	—	ns
ALE setup time	t_{ALS}	25	—	ns
Address to data loading time	t_{ADL}	100	—	ns
CE# Access Time	t_{CEA} (4)	—	45	ns
CE# low to RE# low	t_{CR}	10	—	ns
CE# hold time	t_{CH}	10	—	ns
CE# high to output High-Z	t_{CHZ}	—	30	ns
CLE hold time	t_{CLH}	10	—	ns
CLE to RE# delay	t_{CLR}	10	—	ns
CLE setup time	t_{CLS}	25	—	ns
CE# high to output hold	t_{COH} (3)	15	—	ns
CE# high to ALE or CLE don't care	t_{CSD}	10	—	ns
CE# setup time	t_{CS}	35	—	ns
Data hold time	t_{DH}	10	—	ns
Data setup time	t_{DS}	20	—	ns
Data transfer from cell to register	t_{R}	—	25	µs
Output High-Z to RE# low	t_{IR}	0	—	ns
Read cycle time	t_{RC}	45	—	ns
RE# access time	t_{REA}	—	30	ns
RE# high hold time	t_{REH}	15	—	ns
RE# high to output hold	t_{RHOH} (3)	15	—	ns
RE# high to WE# low	t_{RHW}	100	—	ns
RE# high to output High-Z	t_{RHZ}	—	100	ns
RE# low to output hold	t_{RLOH} (5)	—	—	ns
RE# pulse width	t_{RP}	25	—	ns
Ready to RE# low	t_{RR}	20	—	ns
Device resetting time (Read/Program/Erase)	t_{RST}	—	5/10/500 (2)	µs
WE# high to busy	t_{WB}	—	100	ns
Write cycle time	t_{WC}	45	—	ns
WE# high hold time	t_{WH}	15	—	ns
WE# high to RE# low	t_{WHR}	60	—	ns
WE# pulse width	t_{WP}	25	—	ns
Write protect time	t_{WW}	100	—	ns

Notes:

1. *The time to Ready depends on the value of the pull-up resistor tied to R/B# pin.*
2. *If Reset Command (FFh) is written at Ready state, the device goes into Busy for maximum 5 µs.*
3. *CE# low to high or RE# low to high can be at different times and produce three cases. Depending on which signal comes high first, either t_{COH} or t_{RHOH} will be met.*
4. *During data output, t_{CEA} depends partly on t_{CR} (CE# low to RE# low). If t_{CR} exceeds the minimum value specified, then the maximum time for t_{CEA} may also be exceeded ($t_{CEA} = t_{CR} + t_{REA}$).*
5. *t_{RLOH} is only relevant for EDO timing (t_{RC} < 30 ns), which does not apply for this device.*

5.5 DC Characteristics

Table 5.5 DC Characteristics and Operating Conditions

Parameter		Symbol	Test Conditions	Min	Typ	Max	Units
Power-On Current **(S34MS02G1, S34MS04G1)**		I_{CC0}	Power-Up Current (Refer to Section 4.1)	—	15	30	mA
Operating Current	Sequential Read	I_{CC1}	t_{RC} = see Table 5.4 CE#=V_{IL}, I_{OUT} = 0 mA	—	10	20	mA
	Program	I_{CC2}	Normal (**S34MS01G1**)	—	10	20	mA
			Normal **(S34MS02G1)**	—	10	20	mA
			Normal **(S34MS04G1)**	—	—	20	mA
			Cache **(S34MS02G1)**	—	15	30	mA
			Cache **(S34MS04G1)**	—	—	30	mA
	Erase	I_{CC3}	— **(S34MS01G1)**	—	10	20	mA
			— **(S34MS02G1)**	—	—	20	mA
			— **(S34MS04G1)**	—	10	20	mA
Standby Current, (TTL)		I_{CC4}	CE# = V_{IH}, WP# = 0V/Vcc	—	—	1	mA
Standby Current, (CMOS)		I_{CC5}	CE# = V_{CC} –0.2, WP# = 0/V_{CC}	—	10	50	µA
Input Leakage Current		I_{LI}	V_{IN} = 0 to 3.6 V	—	—	±10	µA
Output Leakage Current		I_{LO}	V_{OUT} = 0 to 3.6 V	—	—	±10	µA
Input High Voltage		V_{IH}	—	V_{CC} x 0.8	—	V_{CC} + 0.3	V
Input Low Voltage		V_{IL}	—	-0.3	—	V_{CC} x 0.2	V
Output High Voltage		V_{OH}	I_{OH} = -100 µA	V_{CC} –0.1	—	—	V
Output Low Voltage		V_{OL}	I_{OL} = 100 µA			0.1	V
Output Low Current (R/B#)		$I_{OL(R/B\#)}$	V_{OL} = 0.1 V	3	4	—	mA
V_{CC} Supply Voltage (erase and program lockout)		V_{LKO}	—	—	1.1	—	V

Notes:
1. *All V_{CCQ} and V_{CC} pins, and V_{SS} and V_{SSQ} pins respectively are shorted together.*
2. *Values listed in this table refer to the complete voltage range for V_{CC} and V_{CCQ} and to a single device in case of device stacking.*
3. *All current measurements are performed with a 0.1 µF capacitor connected between the V_{CC} Supply Voltage pin and the V_{SS} Ground pin.*
4. *Standby current measurement can be performed after the device has completed the initialization process at power up. Refer to Section 4.1 for more details.*

5.6 Pin Capacitance

Table 5.6 Pin Capacitance (TA = 25 °C, f=1.0 MHz)

Parameter	Symbol	Test Condition	Min	Max	Unit
Input	C_{IN}	V_{IN} = 0 V	—	10	pF
Input / Output	C_{IO}	V_{IL} = 0 V	—	10	pF

Note:
1. *For the stacked devices version the Input is 10 pF x [number of stacked chips] and the Input/Output is 10 pF x [number of stacked chips].*

5.7 Program / Erase Characteristics

Table 5.7 Program / Erase Characteristics

Parameter		Description	Min	Typ	Max	Unit
Program Time / Multiplane Program Time (2)		t_{PROG}	—	250	700	µs
Dummy Busy Time for Multiplane Program (**S34MS02G1, S34MS04G1**)		t_{DBSY}	—	0.5	1	µs
Cache Program short busy time (**S34MS02G1, S34MS04G1**)		t_{CBSYW}	—	5	t_{PROG}	µs
Number of partial Program Cycles in the same page	Main + Spare	NOP	—	—	4	Cycle
Block Erase Time / Multiplane Erase Time (**S34MS02G1, S34MS04G1**)		t_{BERS}	—	3.5	10	ms
Block Erase Time (**S34MS01G1**)		t_{BERS}	—	2	3	ms
Read Cache busy time		t_{CBSYR}	—	3	t_R	µs

Notes:

1. *Typical program time is defined as the time within which more than 50% of the whole pages are programmed (V_{CC} = 1.8 V, 25 °C).*
2. *Copy Back Read and Copy Back Program for a given plane must be between odd address pages or between even address pages for the device to meet the program time (t_{PROG}) specification. Copy Back Program may not meet this specification when copying from an odd address page (source page) to an even address page (target page) or from an even address page (source page) to an odd address page (target page).*

6. Timing Diagrams

6.1 Command Latch Cycle

Command Input bus operation is used to give a command to the memory device. Commands are accepted with Chip Enable low, Command Latch Enable High, Address Latch Enable low, and Read Enable High and latched on the rising edge of Write Enable. Moreover for commands that starts a modify operation (write/ erase) the Write Protect pin must be high.

Figure 6.1 Command Latch Cycle

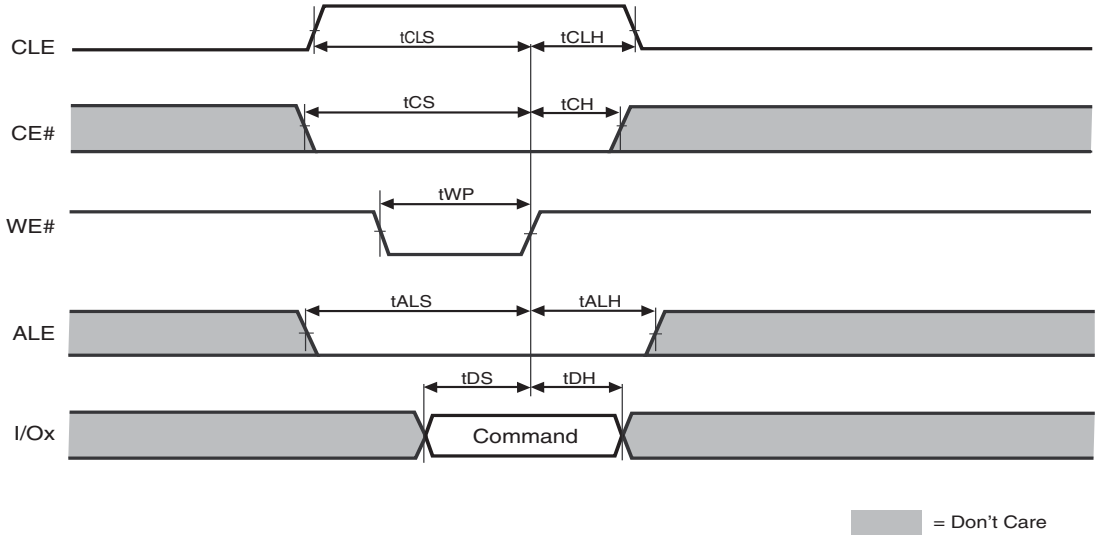

6.2 Address Latch Cycle

Address Input bus operation allows the insertion of the memory address. To insert the 27 (×8 Device) addresses needed to access the 1 Gb, four write cycles are needed. Addresses are accepted with Chip Enable low, Address Latch Enable High, Command Latch Enable low, and Read Enable High and latched on the rising edge of Write Enable. Moreover, for commands that start a modify operation (write/ erase) the Write Protect pin must be high.

Figure 6.2 Address Latch Cycle

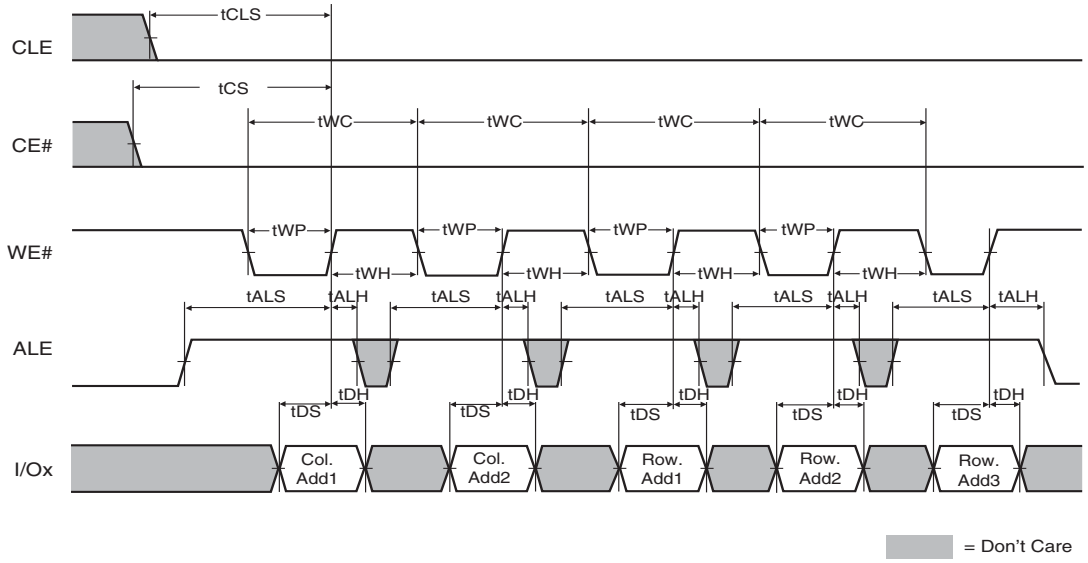

6.3 Data Input Cycle Timing

Data Input bus operation allows the data to be programmed to be sent to the device. The data insertion is serially, and timed by the Write Enable cycles. Data is accepted only with Chip Enable low, Address Latch Enable low, Command Latch Enable low, Read Enable High, and Write Protect High and latched on the rising edge of Write Enable.

Figure 6.3 Input Data Latch Cycle

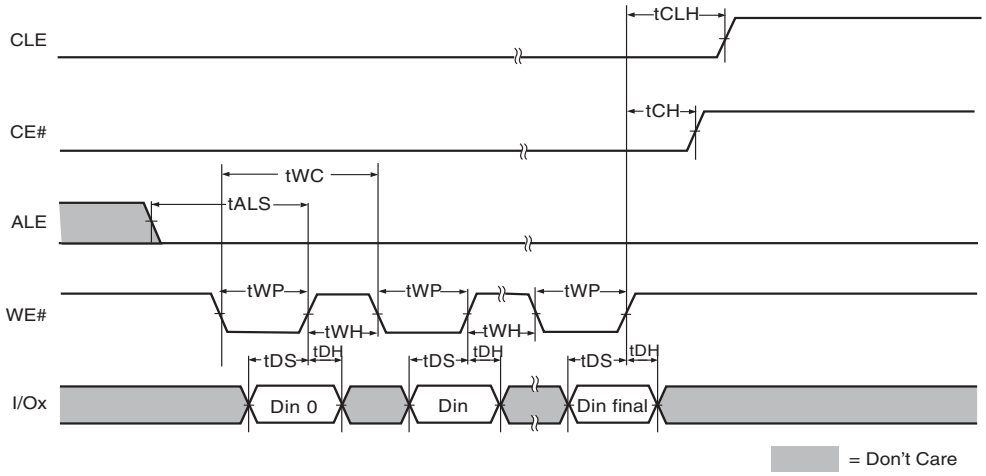

6.4 Data Output Cycle Timing (CLE=L, WE#=H, ALE=L, WP#=H)

Figure 6.4 Data Output Cycle Timing

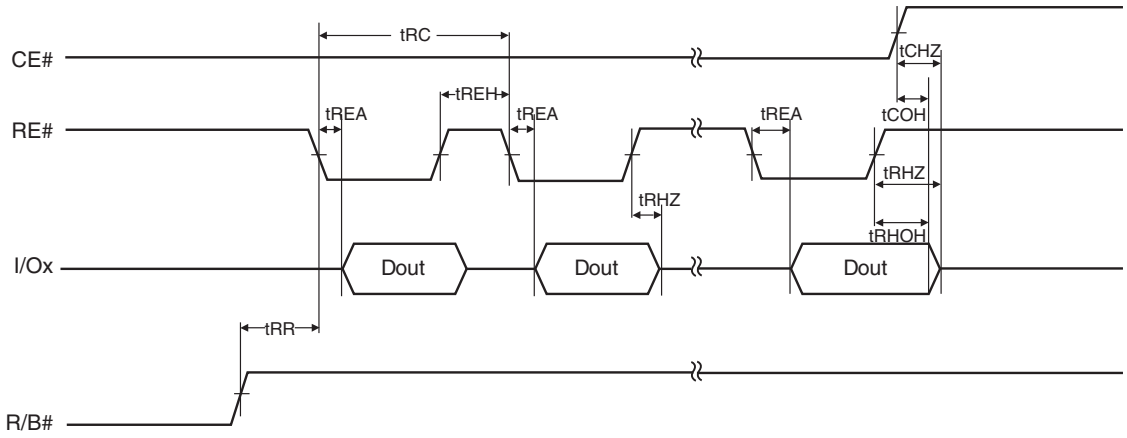

Notes:

1. *Transition is measured at ± 200 mV from steady state voltage with load.*
2. *This parameter is sampled and not 100% tested.*
3. *t_{RHOH} starts to be valid when frequency is lower than 33 MHz.*

6.5 Data Output Cycle Timing (EDO Type, CLE=L, WE#=H, ALE=L)

Figure 6.5 Data Output Cycle Timing (EDO)

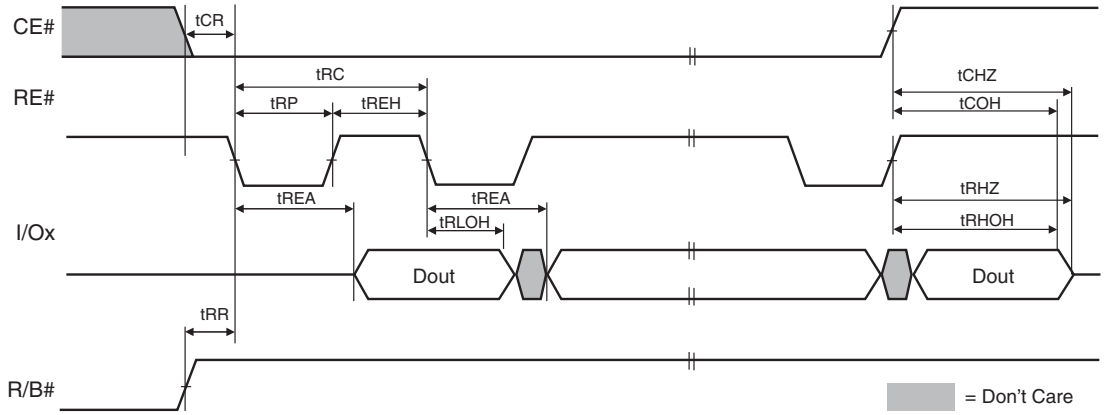

Notes:

1. *Transition is measured at ± 200 mV from steady state voltage with load.*
2. *This parameter is sampled and not 100% tested.*
3. *t_{RLOH} is valid when frequency is higher than 33 MHz.*
4. *t_{RHOH} starts to be valid when frequency is lower than 33 MHz.*

6.6 Page Read Operation

Figure 6.6 Page Read Operation (Read One Page)

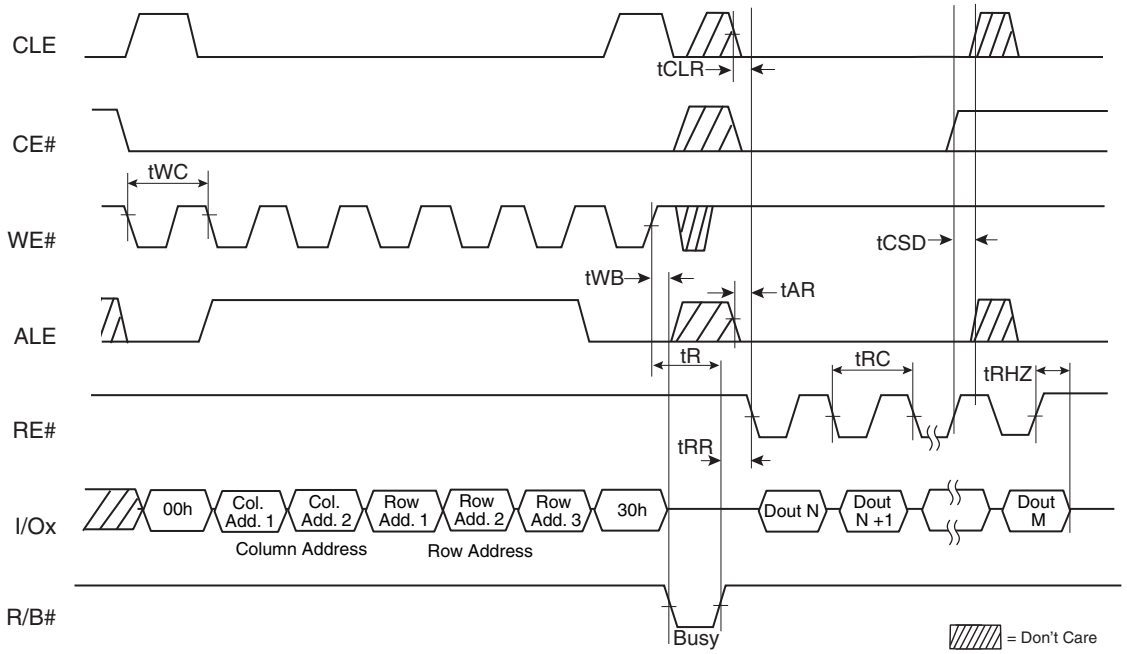

Note:

1. *If Status Register polling is used to determine completion of the read operation, the Read Command (00h) must be issued before data can be read from the page buffer.*

6.7 Page Read Operation (Interrupted by CE#)

Figure 6.7 Page Read Operation Interrupted by CE#

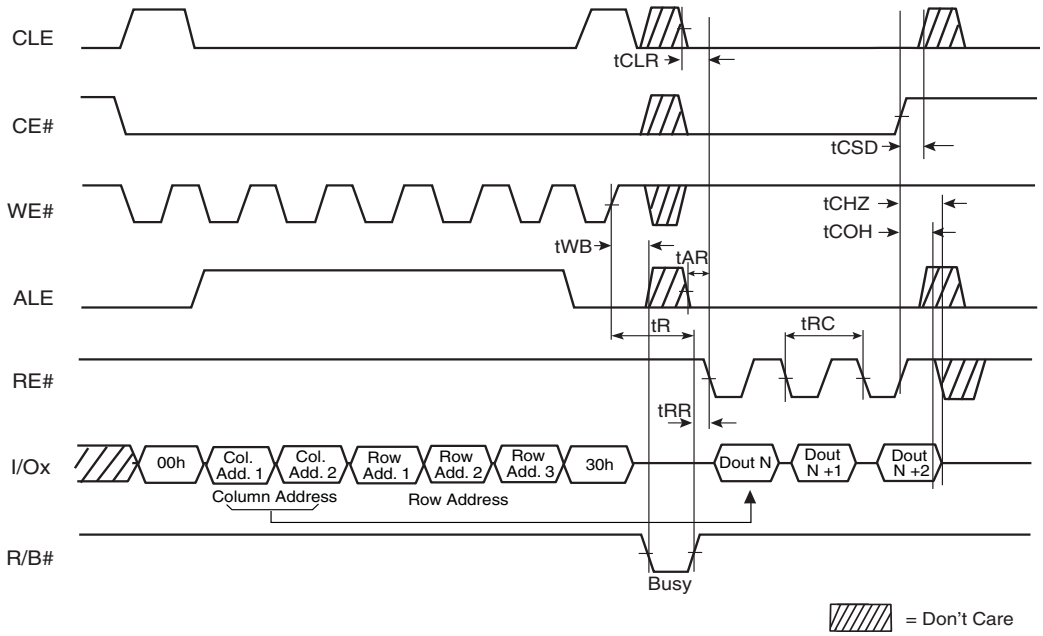

6.8 Page Read Operation Timing with CE# Don't Care

Figure 6.8 Page Read Operation Timing with CE# Don't Care

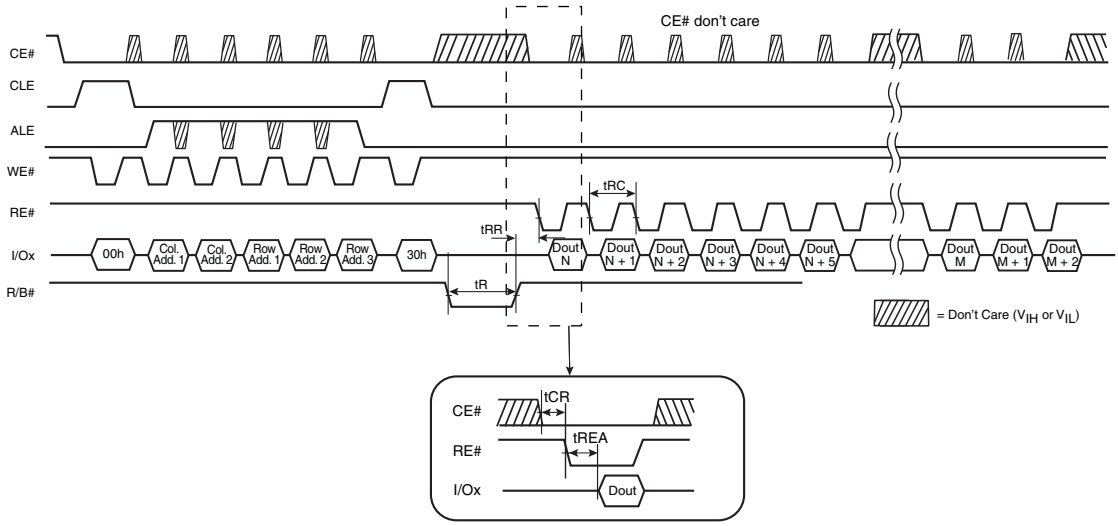

6.9 Page Program Operation

Figure 6.9 Page Program Operation

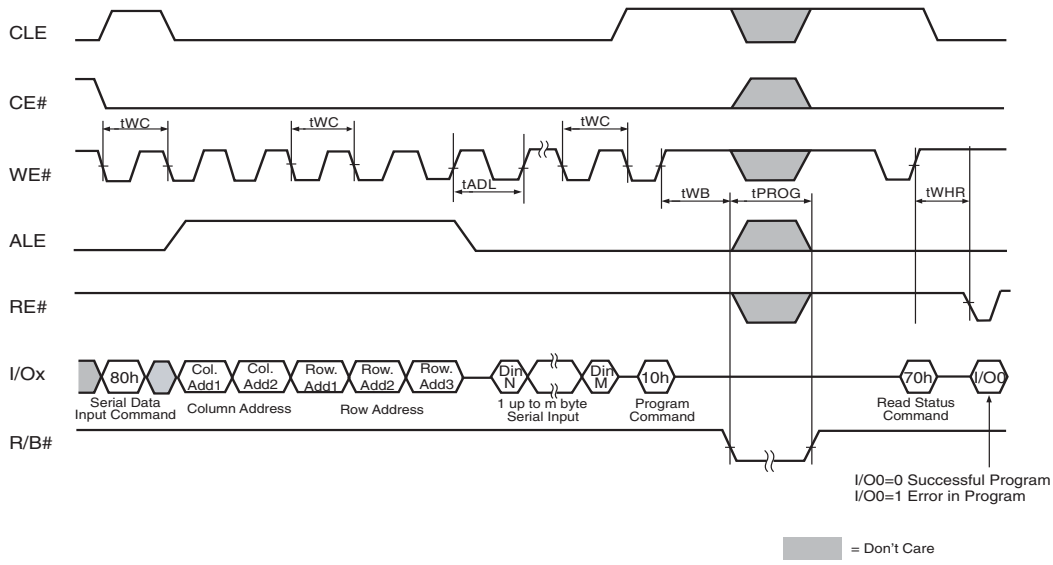

Note:

1. t_{ADL} *is the time from the WE# rising edge of final address cycle to the WE# rising edge of first data cycle.*

6.10 Page Program Operation Timing with CE# Don't Care

Figure 6.10 Page Program Operation Timing with CE# Don't Care

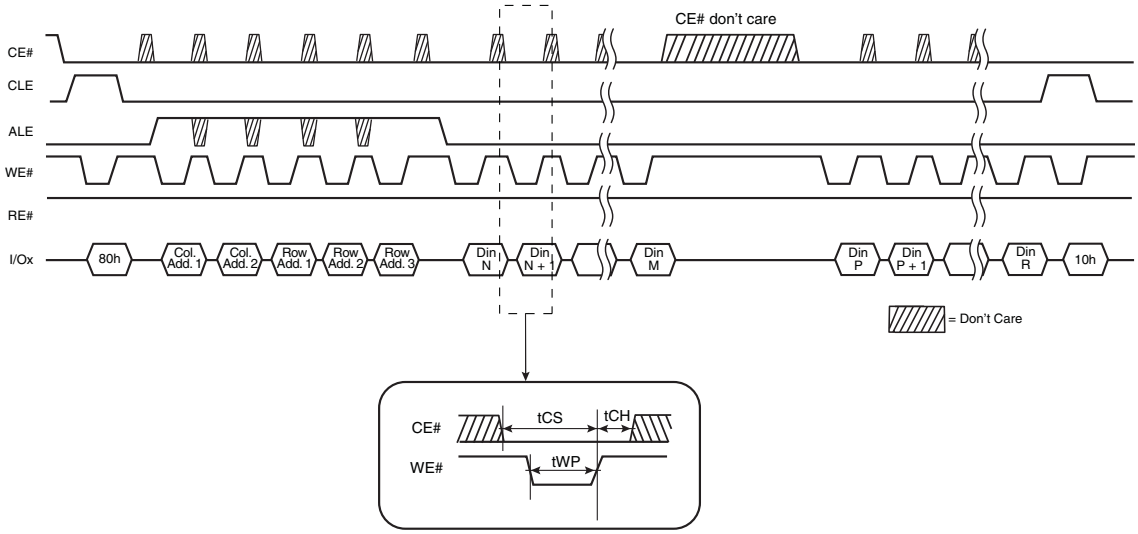

6.11 Page Program Operation with Random Data Input

Figure 6.11 Random Data Input

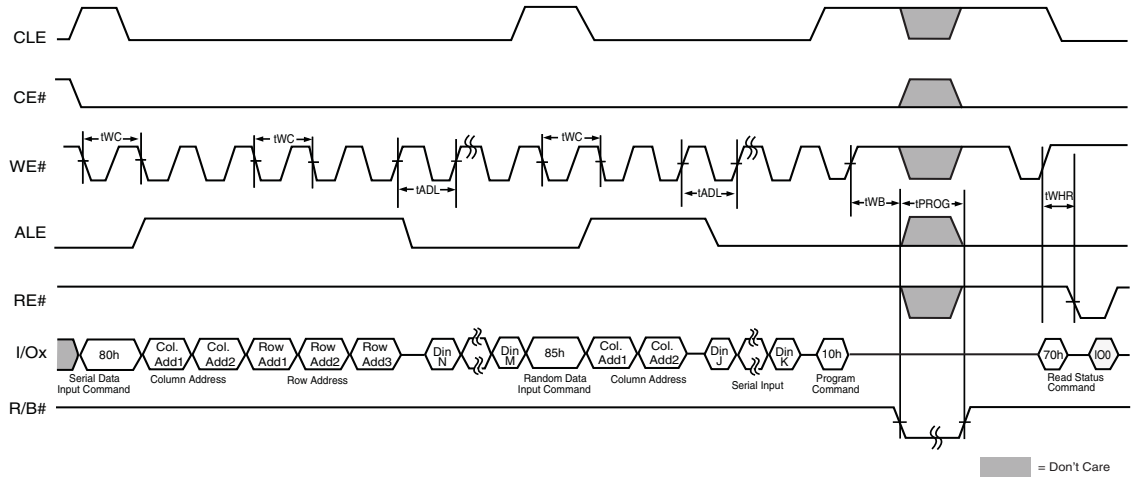

Notes:

1. *t_{ADL} is the time from the WE# rising edge of final address cycle to the WE# rising edge of first data cycle.*
2. *For EDC operation only one Random Data Input is allowed at each EDC Unit.*

6.12 Random Data Output In a Page

Figure 6.12 Random Data Output

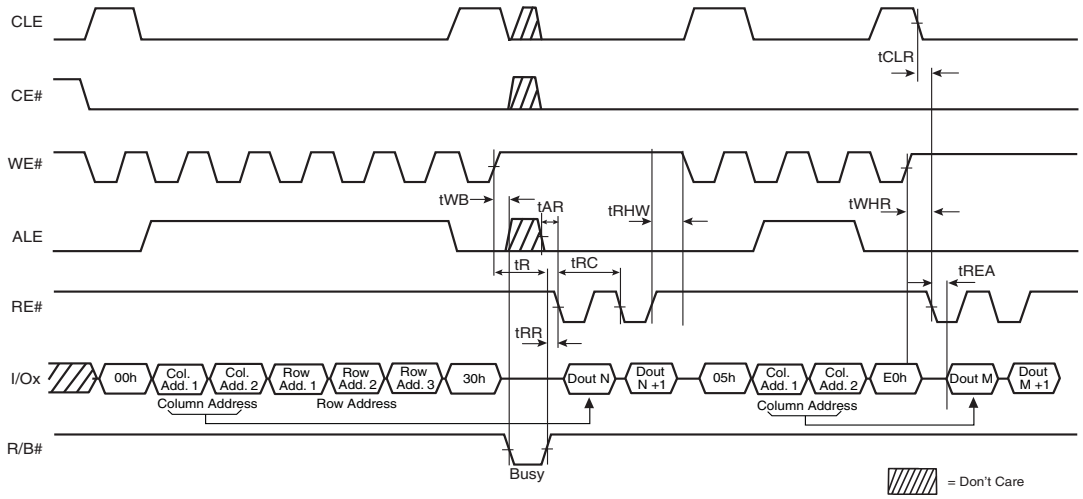

6.13 Multiplane Page Program Operation — S34MS02G1 and S34MS04G1

Figure 6.13 Multiplane Page Program

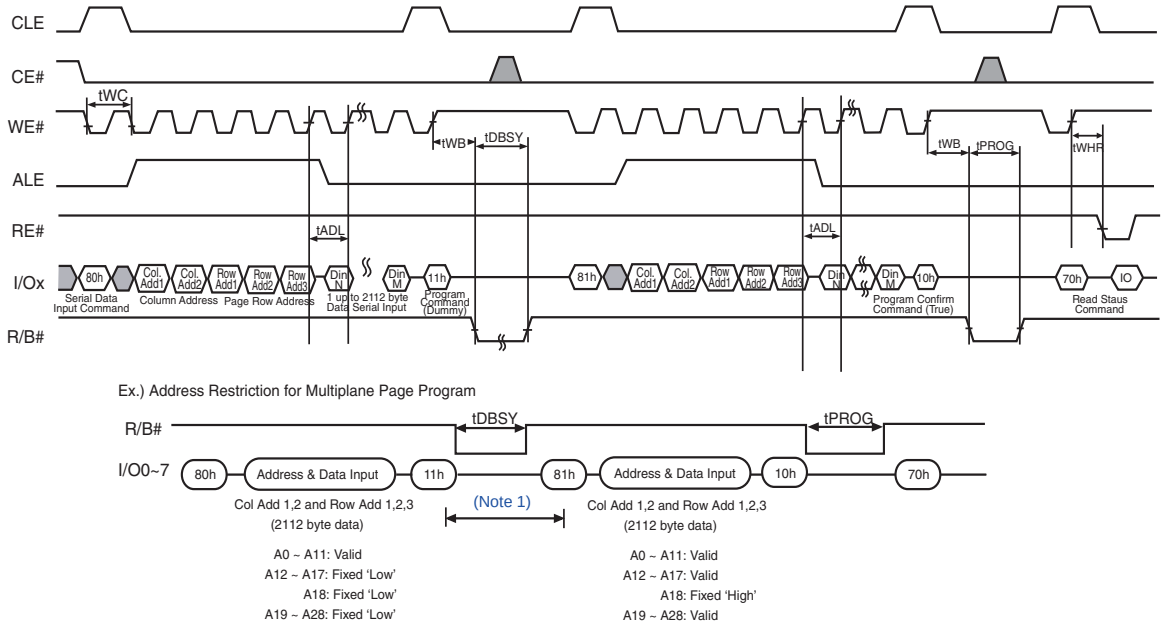

Notes:

1. *Any command between 11h and 81h is prohibited except 70h, 78h, and FFh.*
2. *A18 is the plane address bit for ×8 devices. A17 is the plane address bit for ×16 devices.*

Figure 6.14 Multiplane Page Program (ONFI 1.0 Protocol)

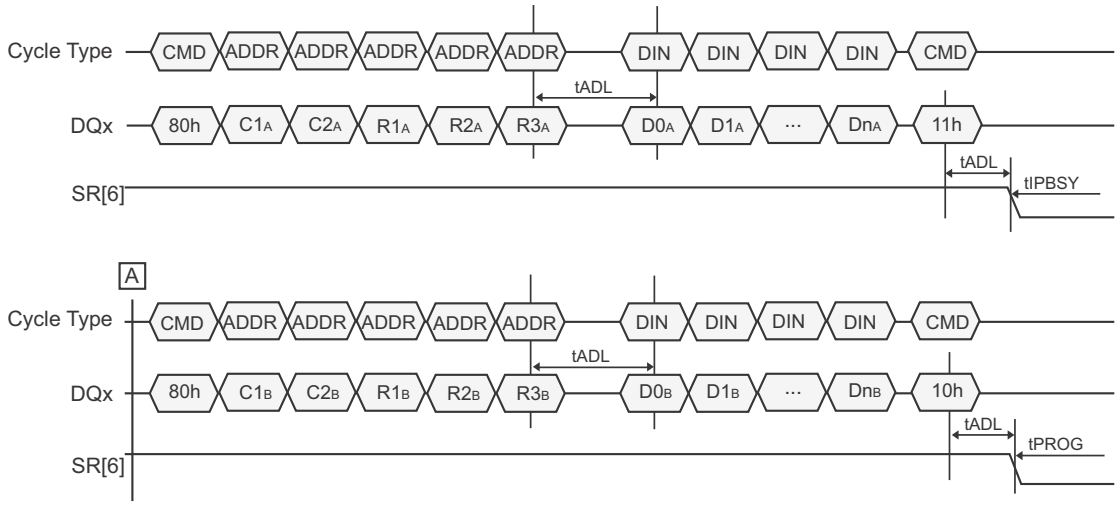

Notes:

1. *C1A-C2A Column address for page A. C1A is the least significant byte.*
2. *R1A-R3A Row address for page A. R1A is the least significant byte.*
3. *D0A-DnA Data to program for page A.*
4. *C1B-C2B Column address for page B. C1B is the least significant byte.*
5. *R1B-R3B Row address for page B. R1B is the least significant byte.*
6. *D0B-DnB Data to program for page B.*
7. *The block address bits must be the same except for the bit(s) that select the plane.*

6.14 Block Erase Operation

Figure 6.15 Block Erase Operation (Erase One Block)

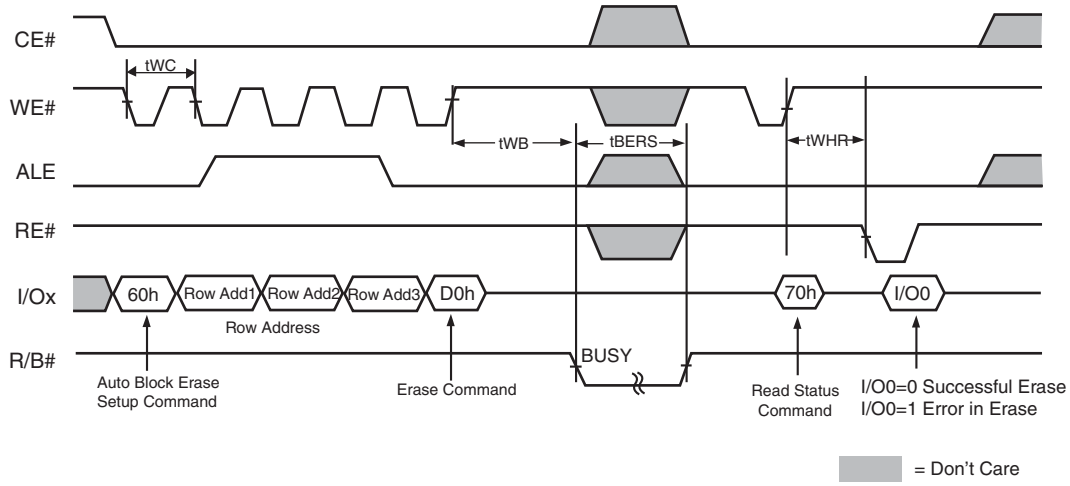

6.15 Multiplane Block Erase — S34MS02G1 and S34MS04G1

Figure 6.16 Multiplane Block Erase

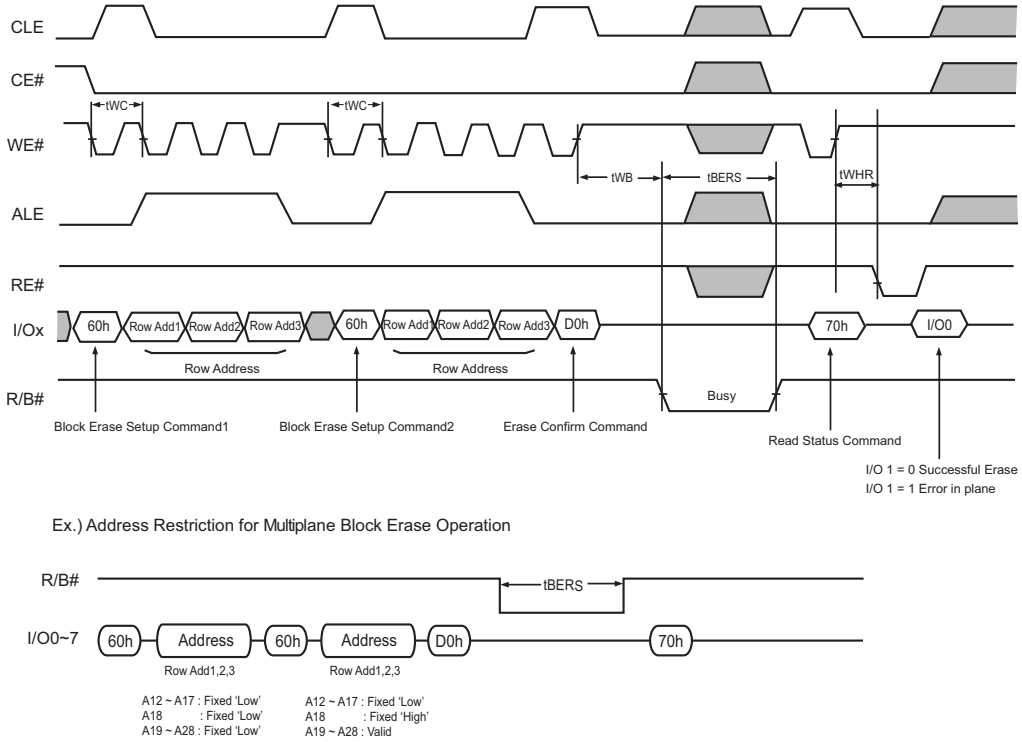

Note:

1. *A18 is the plane address bit for ×8 devices. A17 is the plane address bit for ×16 devices.*

Figure 6.17 Multiplane Block Erase (ONFI 1.0 Protocol)

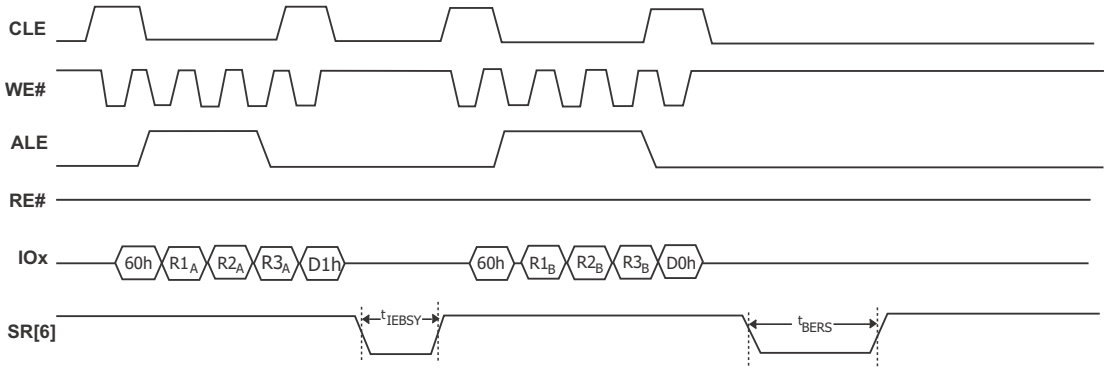

Notes:

1. *R1A-R3A Row address for block on plane 0. R1A is the least significant byte.*
2. *R1B-R3B Row address for block on plane 1. R1B is the least significant byte.*
3. *The block address bits must be the same except for the bit(s) that select the plane.*

6.16 Copy Back Read with Optional Data Readout

Figure 6.18 Copy Back Read with Optional Data Readout

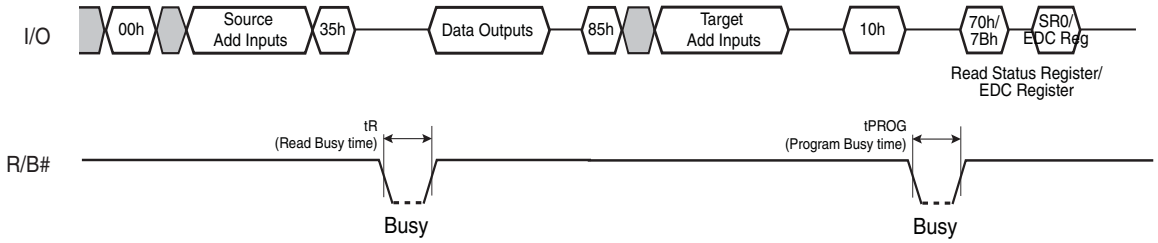

6.17 Copy Back Program Operation With Random Data Input

Figure 6.19 Copy Back Program with Random Data Input

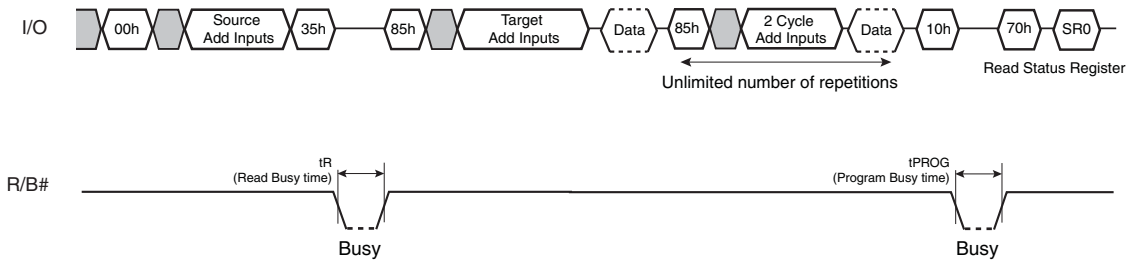

6.18 Multiplane Copy Back Program — S34MS02G1 and S34MS04G1

Figure 6.20 Multiplane Copy Back Program

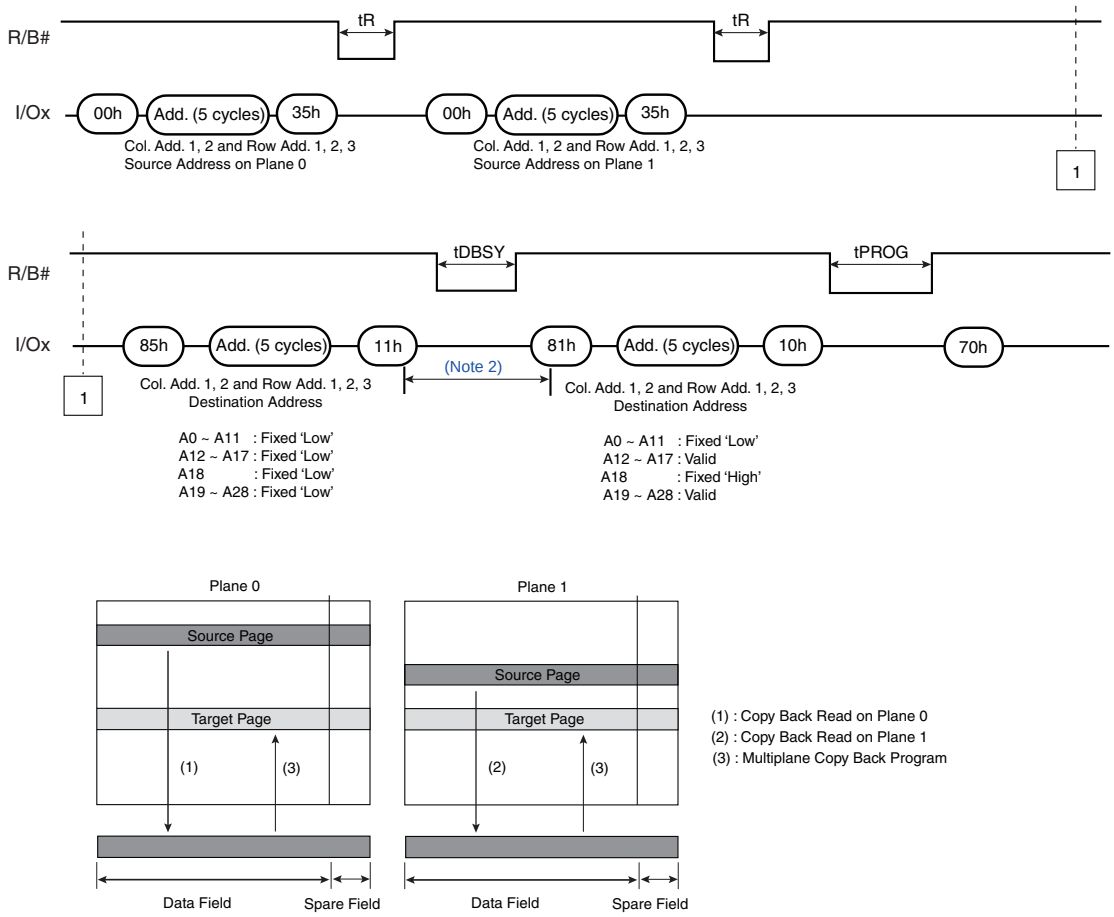

Notes:

1. *Copy Back Program operation is allowed only within the same memory plane.*
2. *Any command between 11h and 81h is prohibited except 70h, 78h, and FFh.*
3. *A18 is the plane address bit for ×8 devices. A17 is the plane address bit for ×16 devices.*

Figure 6.21 Multiplane Copy Back Program (ONFI 1.0 Protocol)

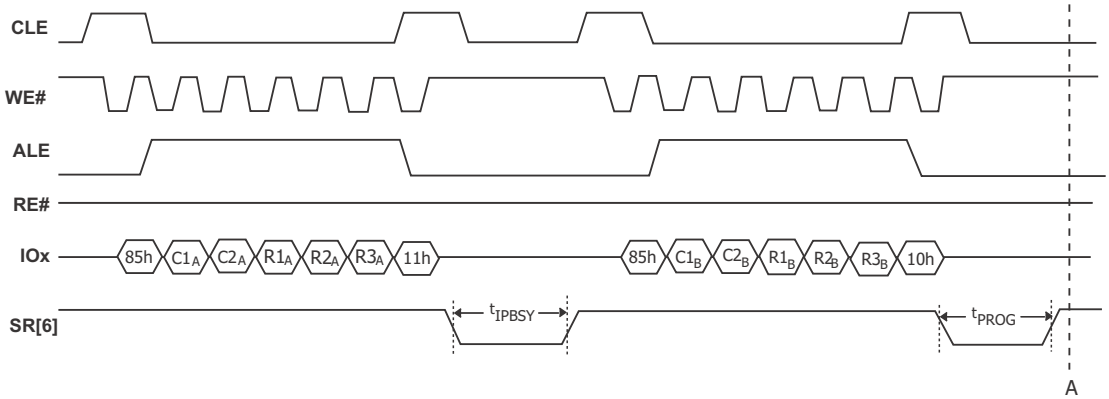

Notes:

1. *C1A-C2A Column address for page A. C1A is the least significant byte.*
2. *R1A-R3A Row address for page A. R1A is the least significant byte.*
3. *C1B-C2B Column address for page B. C1B is the least significant byte.*
4. *R1B-R3B Row address for page B. R1B is the least significant byte.*
5. *The block address bits must be the same except for the bit(s) that select the plane.*

6.19 Read Status Register Timing

Figure 6.22 Status / EDC Read Cycle

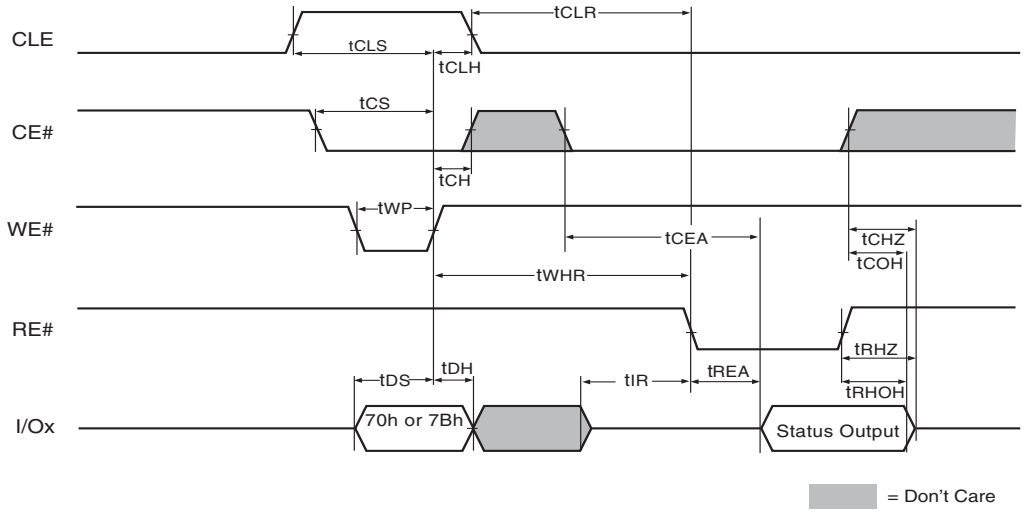

6.20 Read Status Enhanced Timing

Figure 6.23 Read Status Enhanced Timing

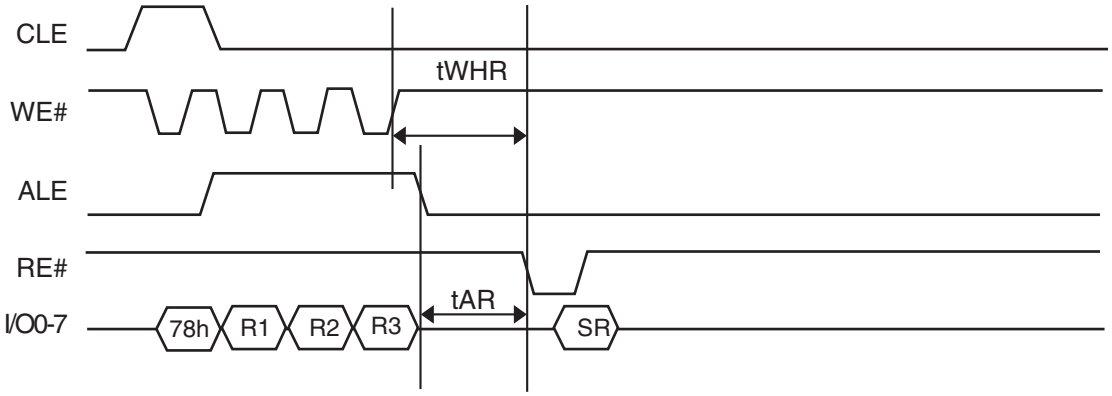

6.21 Reset Operation Timing

Figure 6.24 Reset Operation Timing

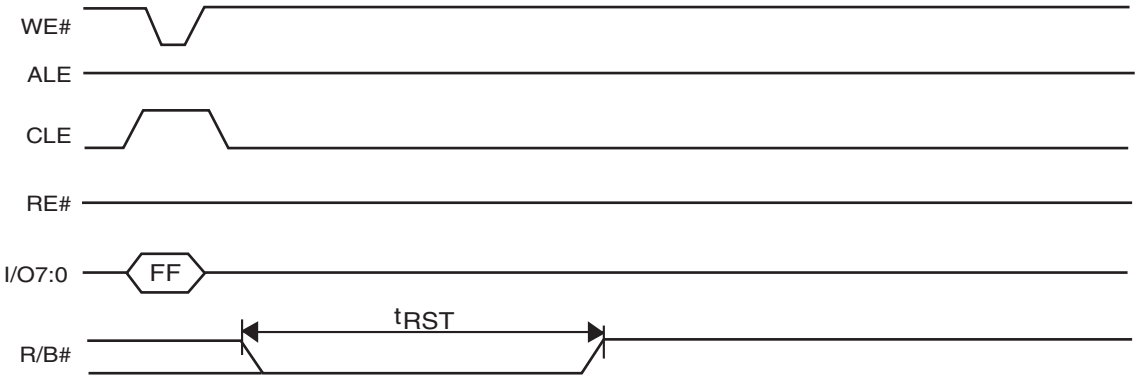

6.22 Read Cache

Figure 6.25 Read Cache Operation Timing

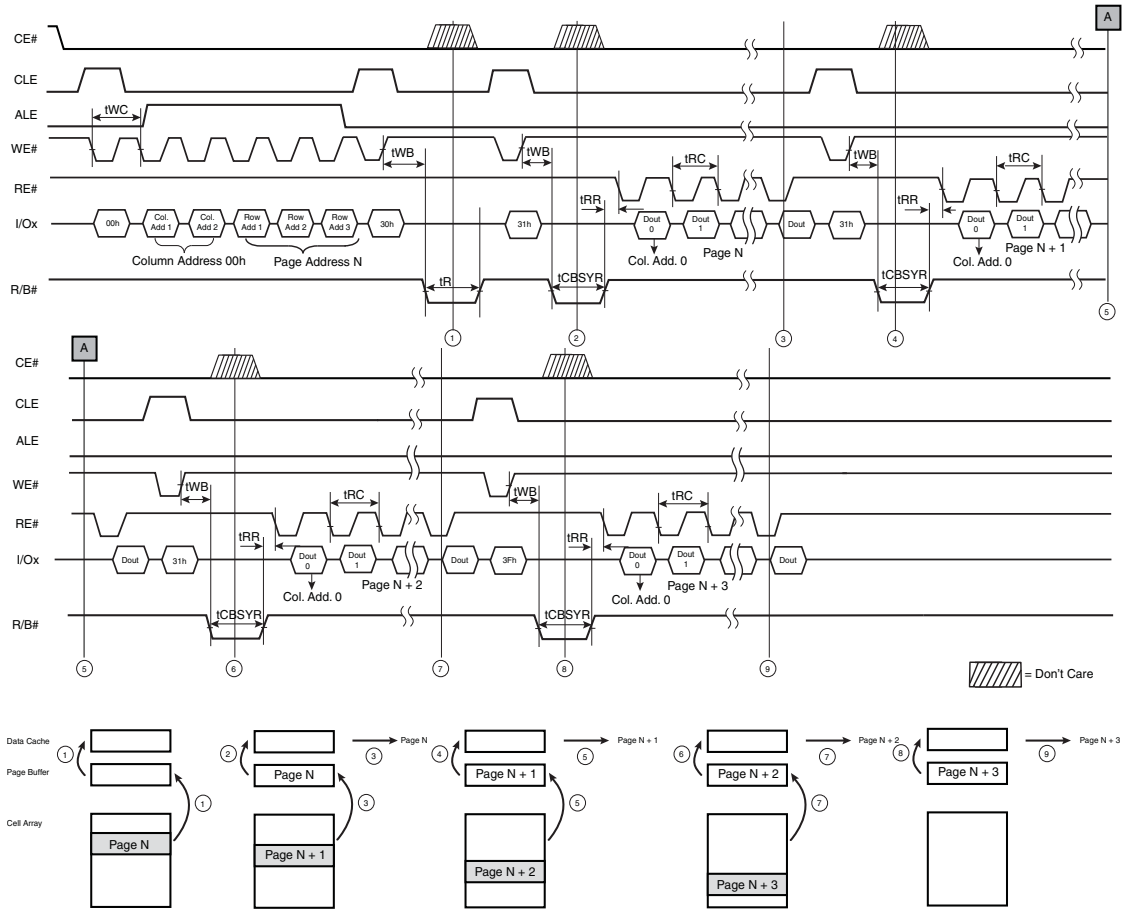

Figure 6.26 "Sequential" Read Cache Timing, Start (and Continuation) of Cache Operation

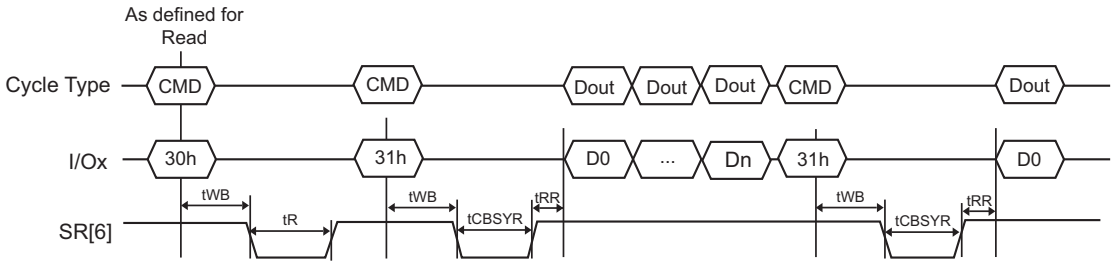

Figure 6.27 "Random" Read Cache Timing, Start (and Continuation) of Cache Operation

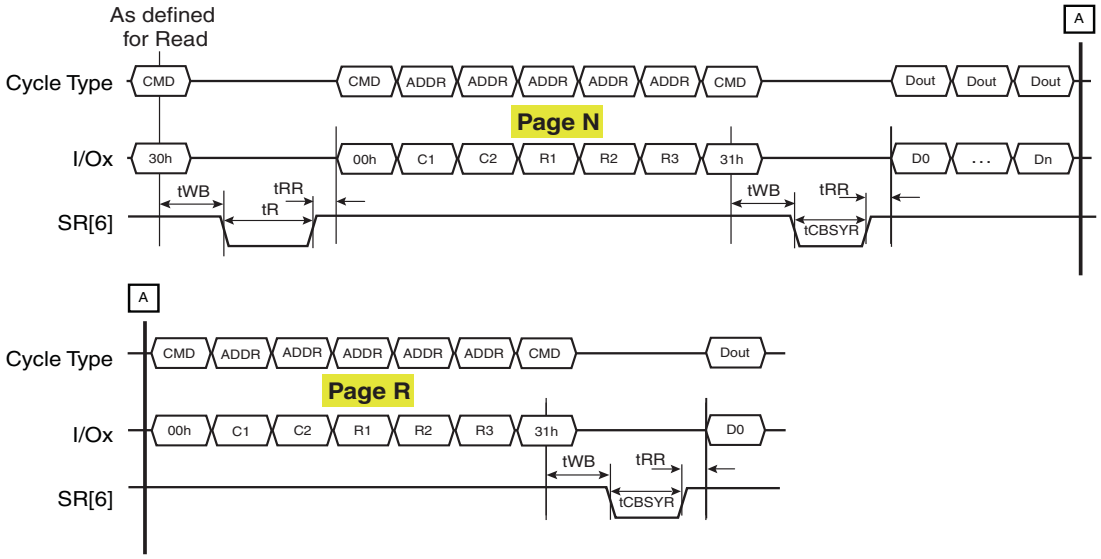

Figure 6.28 Read Cache Timing, End Of Cache Operation

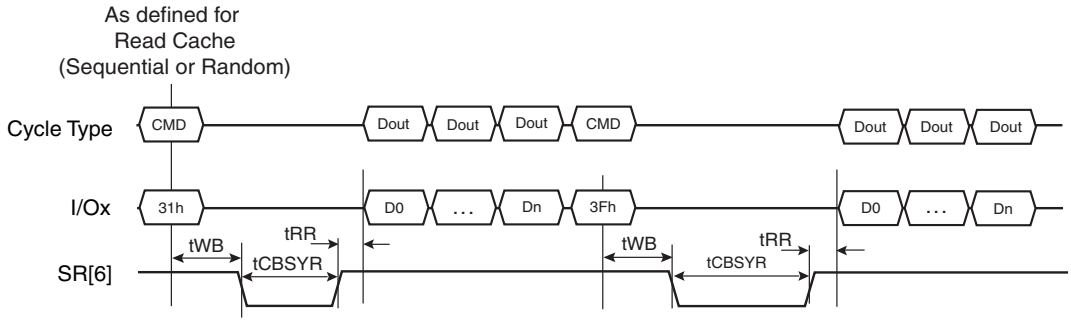

6.23 Cache Program

Figure 6.29 Cache Program

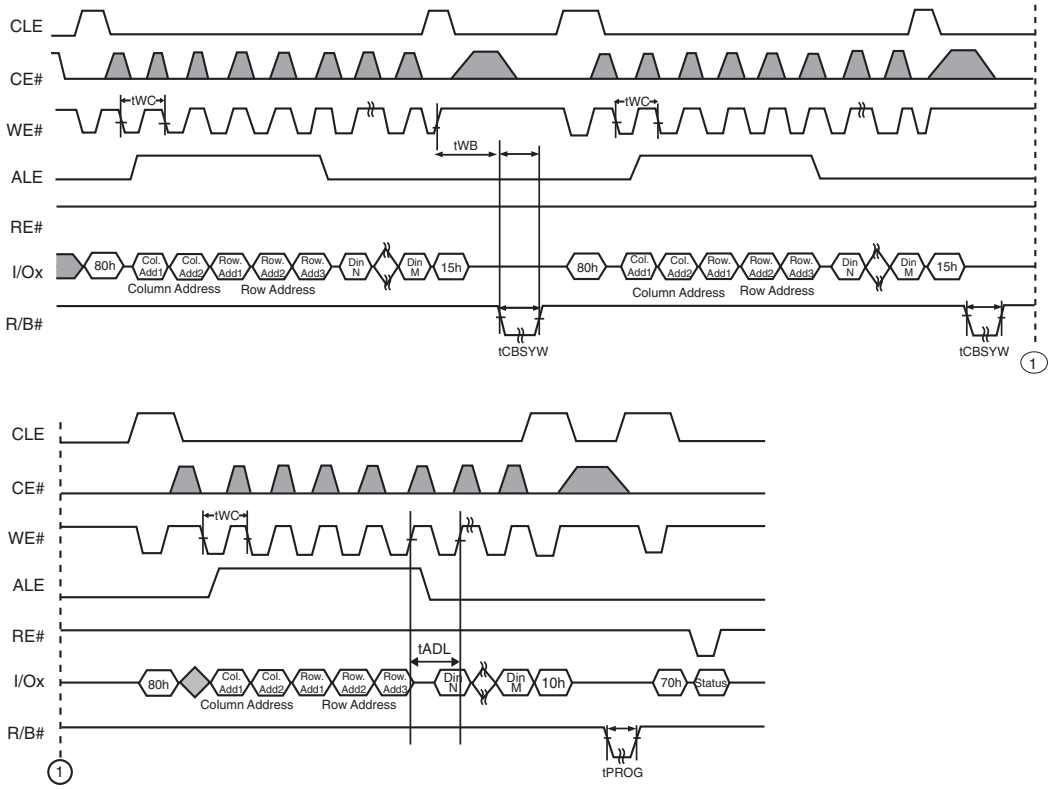

6.24 Multiplane Cache Program — S34MS02G1 and S34MS04G1

Figure 6.30 Multiplane Cache Program

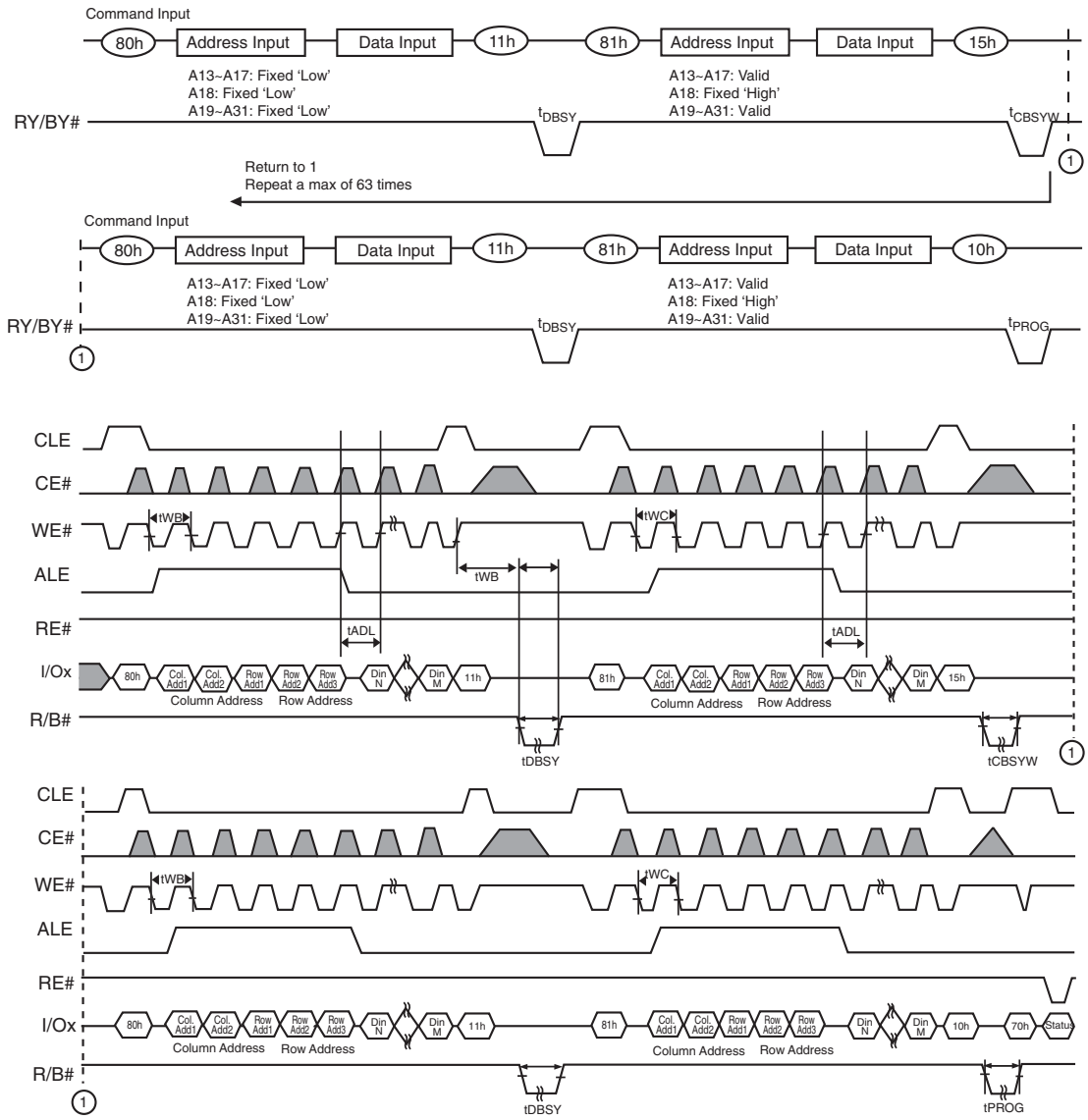

Notes:

1. *Read Status Register (70h) is used in the figure. Read Status Enhanced (78h) can be also used.*
2. *A18 is the plane address bit for ×8 devices. A17 is the plane address bit for ×16 devices.*

Figure 6.31 Multiplane Cache Program (ONFI 1.0 Protocol)

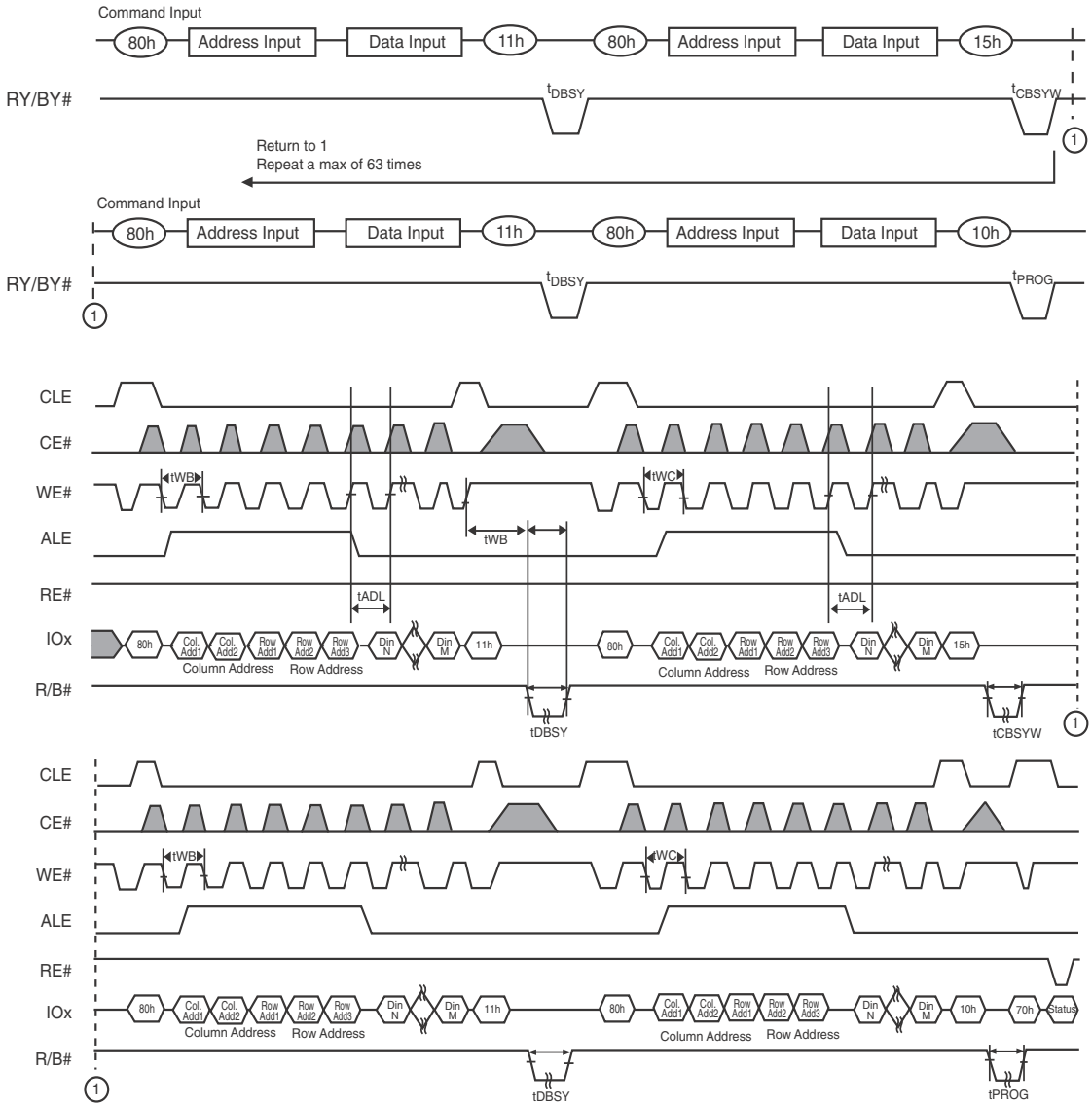

Notes:

1. *The block address bits must be the same except for the bit(s) that select the plane.*
2. *Read Status register (70h) is used in the figure. Read Status Enhanced (78h) can be also used.*

6.25 Read ID Operation Timing

Figure 6.32 Read ID Operation Timing

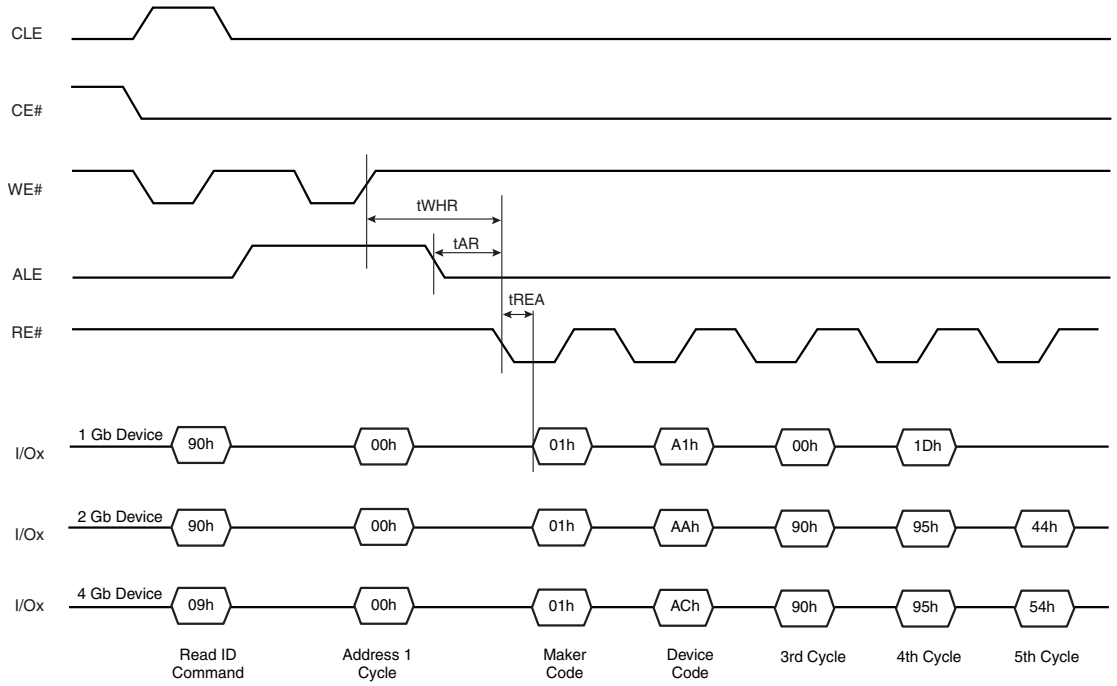

6.26 Read ID2 Operation Timing

Figure 6.33 Read ID2 Operation Timing

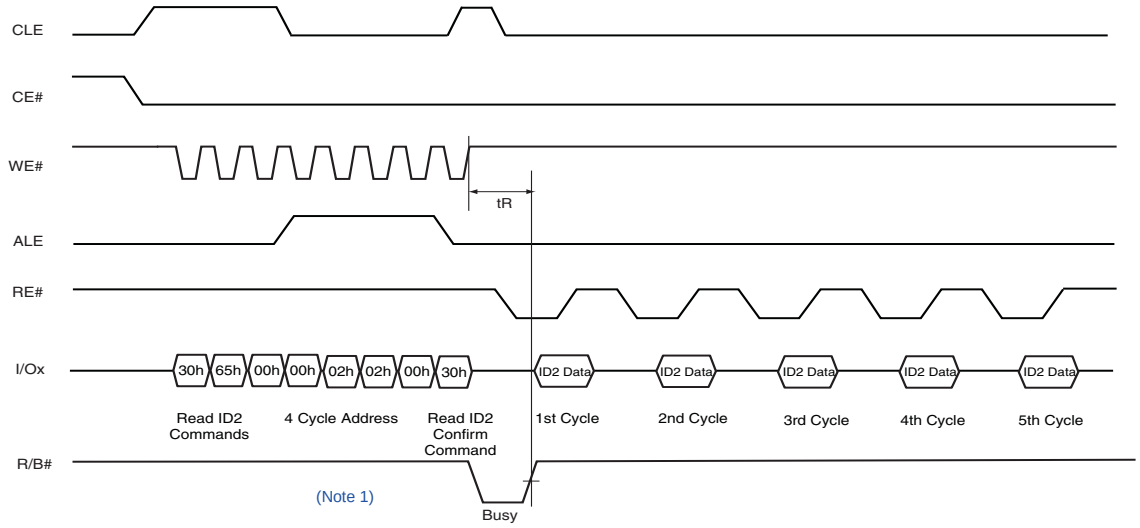

Notes:

1. *4-cycle address is shown for the S34MS01G1. For S34MS02G1 and S34MS04G1, insert an additional address cycle of 00h.*
2. *If Status Register polling is used to determine completion of the Read ID2 operation, the Read Command (00h) must be issued before ID2 data can be read from the flash.*

6.27 Read ONFI Signature Timing

Figure 6.34 ONFI Signature Timing

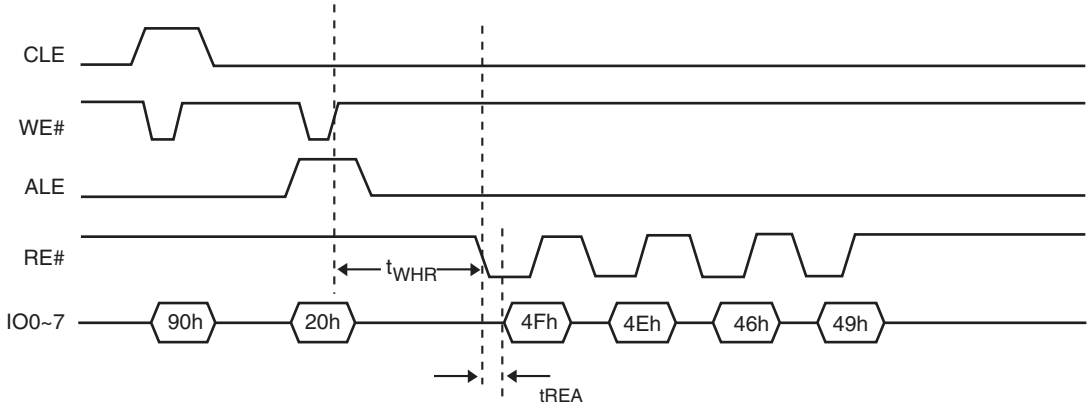

6.28 Read Parameter Page Timing

Figure 6.35 Read Parameter Page Timing

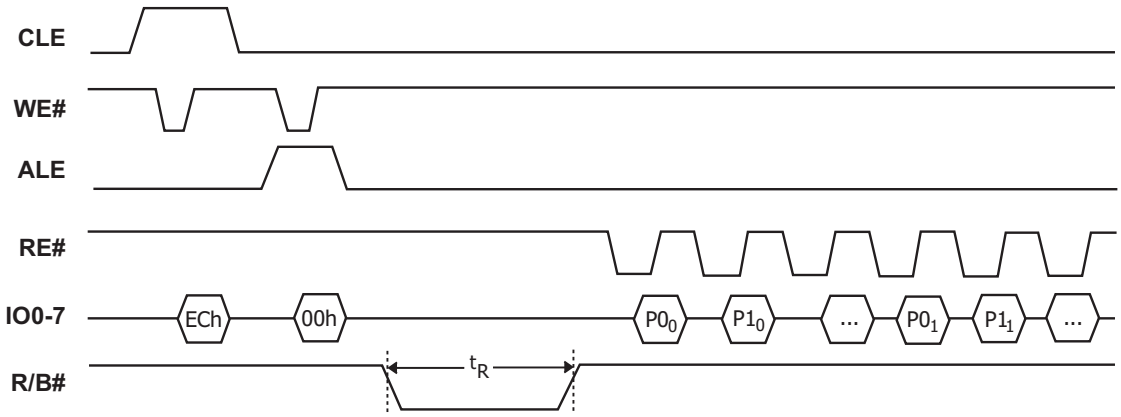

Note:

1. *If Status Register polling is used to determine completion of the read operation, the Read Command (00h) must be issued before data can be read from the page buffer.*

6.29 OTP Entry Timing

Figure 6.36 OTP Entry Timing

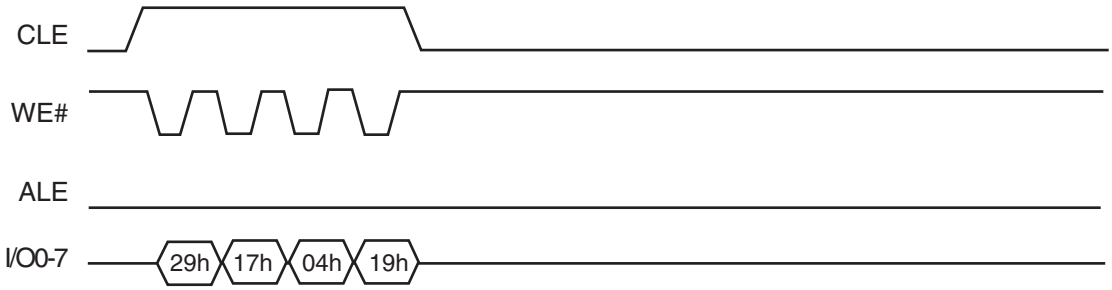

6.30 Power On and Data Protection Timing

Figure 6.37 Power On and Data Protection Timing

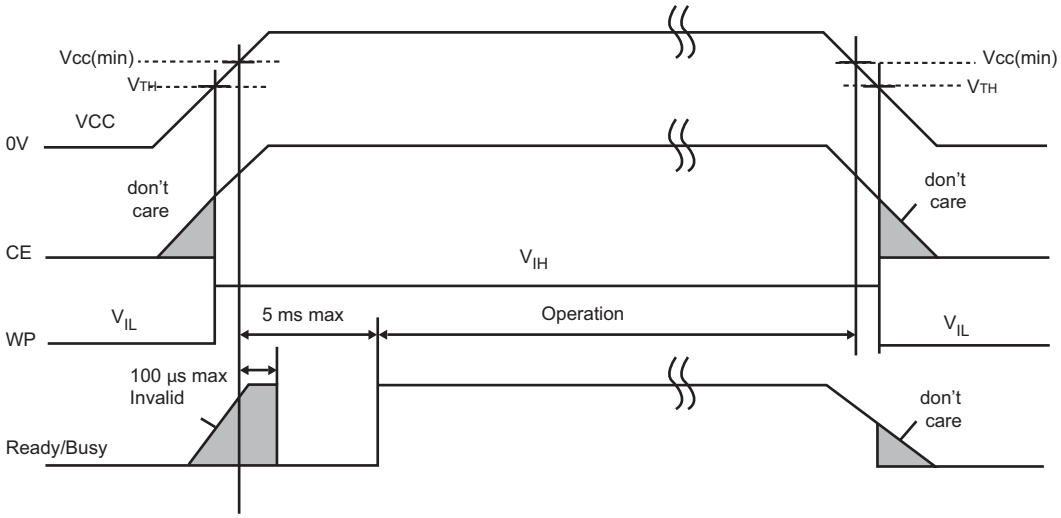

Note:
1. V_{TH} = 1.2 volts.

6.31 WP# Handling

Figure 6.38 Program Enabling / Disabling Through WP# Handling

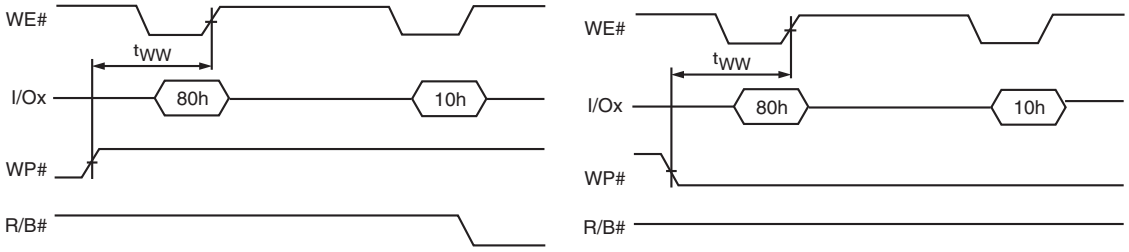

Figure 6.39 Erase Enabling / Disabling Through WP# Handling

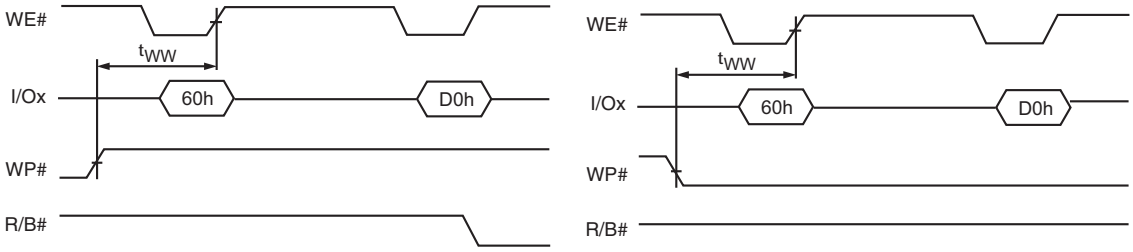

7. Physical Interface

7.1 Physical Diagram

7.1.1 48-Pin Thin Small Outline Package (TSOP1)

Figure 7.1 TS/TSR 48 — 48-Pin Plastic Thin Small Outline, 12 x 20 mm, Package Outline

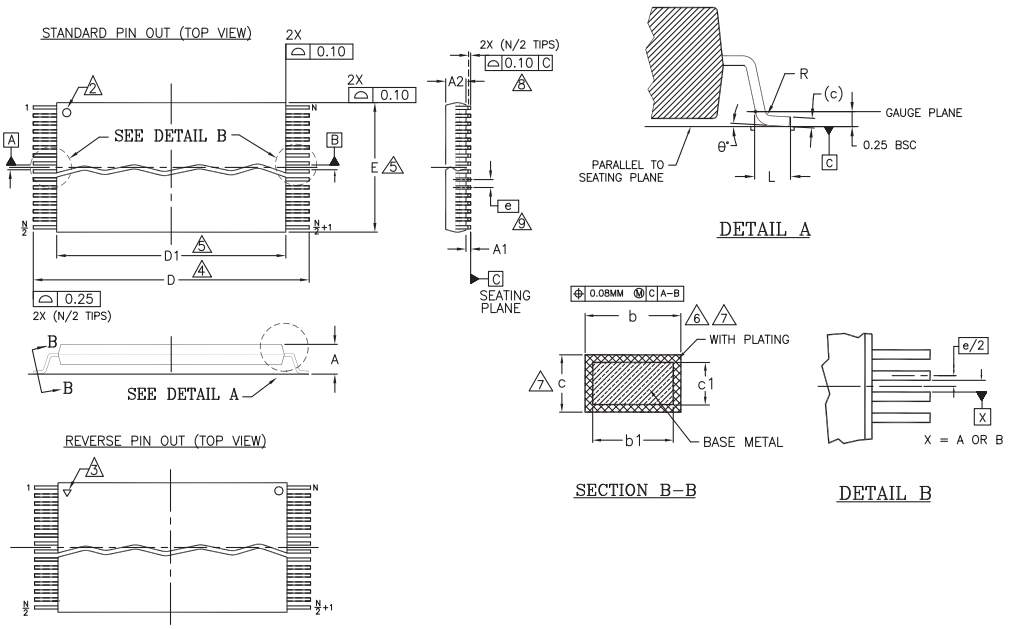

PACKAGE	TS/TSR 48		
JEDEC	MO-142 (D) DD		
SYMBOL	MIN	NOM	MAX
A	---	---	1.20
A1	0.05	---	0.15
A2	0.95	1.00	1.05
b1	0.17	0.20	0.23
b	0.17	0.22	0.27
c1	0.10	---	0.16
c	0.10	---	0.21
D	19.80	20.00	20.20
D1	18.30	18.40	18.50
E	11.90	12.00	12.10
e	0.50 BASIC		
L	0.50	0.60	0.70
θ	0°	---	8
R	0.08	---	0.20
N	48		

NOTES:

1. DIMENSIONS ARE IN MILLIMETERS (mm). (DIMENSIONING AND TOLERANCING CONFORM TO ANSI Y14.5M-1994).
2. PIN 1 IDENTIFIER FOR STANDARD PIN OUT (DIE UP).
3. PIN 1 IDENTIFIER FOR REVERSE PIN OUT (DIE DOWN): INK OR LASER MARK.
4. TO BE DETERMINED AT THE SEATING PLANE -C-. THE SEATING PLANE IS DEFINED AS THE PLANE OF CONTACT THAT IS MADE WHEN THE PACKAGE LEADS ARE ALLOWED TO REST FREELY ON A FLAT HORIZONTAL SURFACE.
5. DIMENSIONS D1 AND E DO NOT INCLUDE MOLD PROTRUSION. ALLOWABLE MOLD PROTRUSION ON E IS 0.15mm PER SIDE AND ON D1 IS 0.25mm PER SIDE.
6. DIMENSION b DOES NOT INCLUDE DAMBAR PROTRUSION. ALLOWABLE DAMBAR PROTRUSION SHALL BE 0.08mm TOTAL IN EXCESS OF b DIMENSION AT MAX. MATERIAL CONDITION. DAMBAR CANNOT BE LOCATED ON LOWER RADIUS OR THE FOOT. MINIMUM SPACE BETWEEN PROTRUSION AND AN ADJACENT LEAD TO BE 0.07mm.
7. THESE DIMENSIONS APPLY TO THE FLAT SECTION OF THE LEAD BETWEEN 0.10mm AND 0.25mm FROM THE LEAD TIP.
8. LEAD COPLANARITY SHALL BE WITHIN 0.10mm AS MEASURED FROM THE SEATING PLANE.
9. DIMENSION "e" IS MEASURED AT THE CENTERLINE OF THE LEADS.

5006 \ f16-038 \ 6.5.13

7.1.2 63-Pin Ball Grid Array (BGA)

Figure 7.2 VBM063 — 63-Pin BGA, 11 mm x 9 mm Package

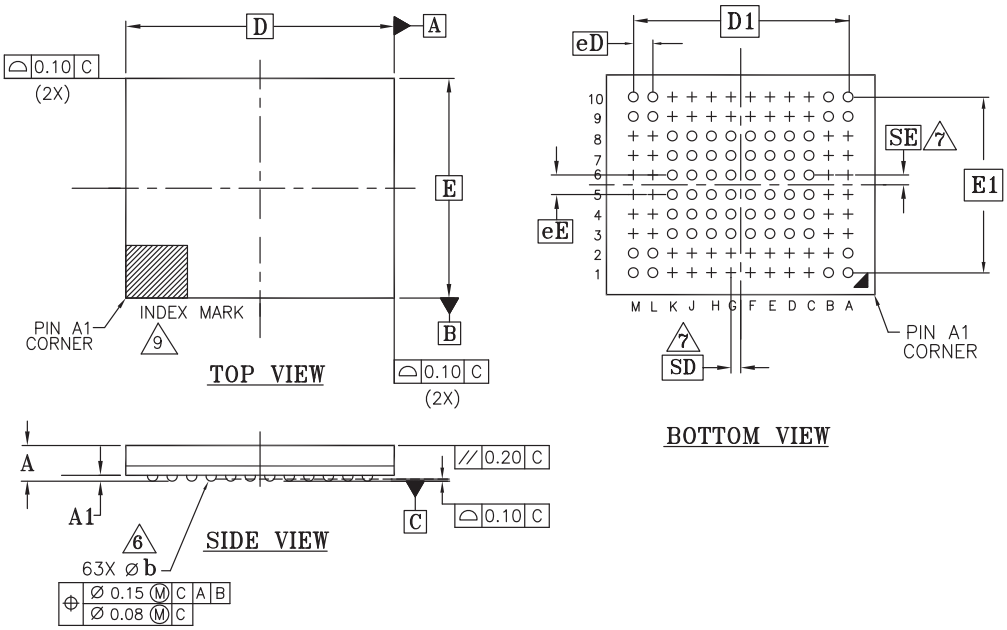

PACKAGE	VBM 063			
JEDEC	M0-207(M)			
	11.00 mm x 9.00 mm NOM PACKAGE			
SYMBOL	MIN	NOM	MAX	NOTE
A	---	---	1.00	PROFILE
A1	0.25	---	---	BALL HEIGHT
D	11.00 BSC.			BODY SIZE
E	9.00 BSC.			BODY SIZE
D1	8.80 BSC.			MATRIX FOOTPRINT
E1	7.20 BSC.			MATRIX FOOTPRINT
MD	12			MATRIX SIZE D DIRECTION
ME	10			MATRIX SIZE E DIRECTION
n	63			BALL COUNT
⌀b	0.40	0.45	0.50	BALL DIAMETER
eE	0.80 BSC.			BALL PITCH
eD	0.80 BSC.			BALL PITCH
SD	0.40 BSC.			SOLDER BALL PLACEMENT
SE	0.40 BSC.			SOLDER BALL PLACEMENT
	A3-A8,B2-B8,C1,C2,C9,C10 D1,D2,D9,D10,E1,E2,E9,E10 F1,F2,F9,F10,G1,G2,G9,G10 H1,H2,H9,H10,J1,J2,J9,J10 K1,K2,K9,K10 L3-L8,M3-M8			DEPOPULATED SOLDER BALLS

NOTES:

1. DIMENSIONING AND TOLERANCING METHODS PER ASME Y14.5M-1994.
2. ALL DIMENSIONS ARE IN MILLIMETERS.
3. BALL POSITION DESIGNATION PER JEP95, SECTION 3, SPP-020.
4. e REPRESENTS THE SOLDER BALL GRID PITCH.
5. SYMBOL "MD" IS THE BALL MATRIX SIZE IN THE "D" DIRECTION.

   SYMBOL "ME" IS THE BALL MATRIX SIZE IN THE "E" DIRECTION.

   n IS THE TOTAL NUMBER OF POPULATED SOLDER BALL POSITIONS FOR MATRIX SIZE MD X ME.

6. DIMENSION "b" IS MEASURED AT THE MAXIMUM BALL DIAMETER IN A PLANE PARALLEL TO DATUM C.
7. "SD" AND "SE" ARE MEASURED WITH RESPECT TO DATUMS A AND B AND DEFINE THE POSITION OF THE CENTER SOLDER BALL IN THE OUTER ROW.

   WHEN THERE IS AN ODD NUMBER OF SOLDER BALLS IN THE OUTER ROW "SD" OR "SE" = 0.

   WHEN THERE IS AN EVEN NUMBER OF SOLDER BALLS IN THE OUTER ROW, "SD" = eD/2 AND "SE" = eE/2.

8. "+" INDICATES THE THEORETICAL CENTER OF DEPOPULATED BALLS.
9. A1 CORNER TO BE IDENTIFIED BY CHAMFER, LASER OR INK MARK, METALLIZED MARK INDENTATION OR OTHER MEANS.

g5011\ 16-038.25 \ 6.5.13

8. System Interface

To simplify system interface, CE# may be unasserted during data loading or sequential data reading as shown in Figure 8.1. By operating in this way, it is possible to connect NAND flash to a microprocessor.

Figure 8.1 Program Operation with CE# Don't Care

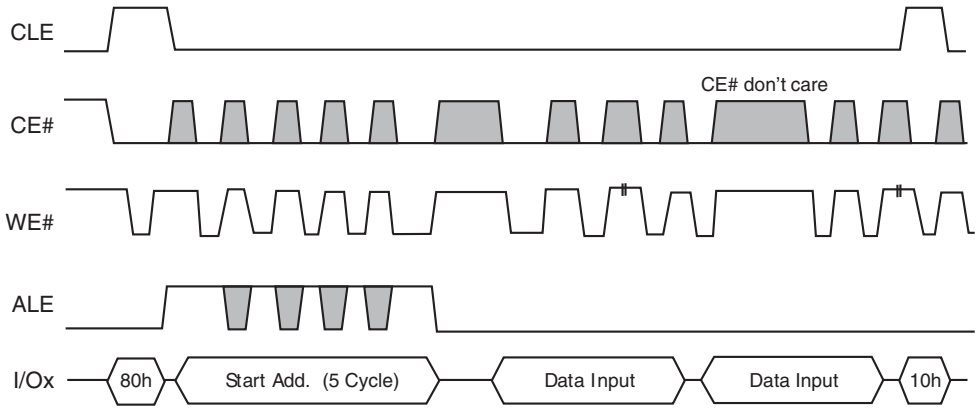

Figure 8.2 Read Operation with CE# Don't Care

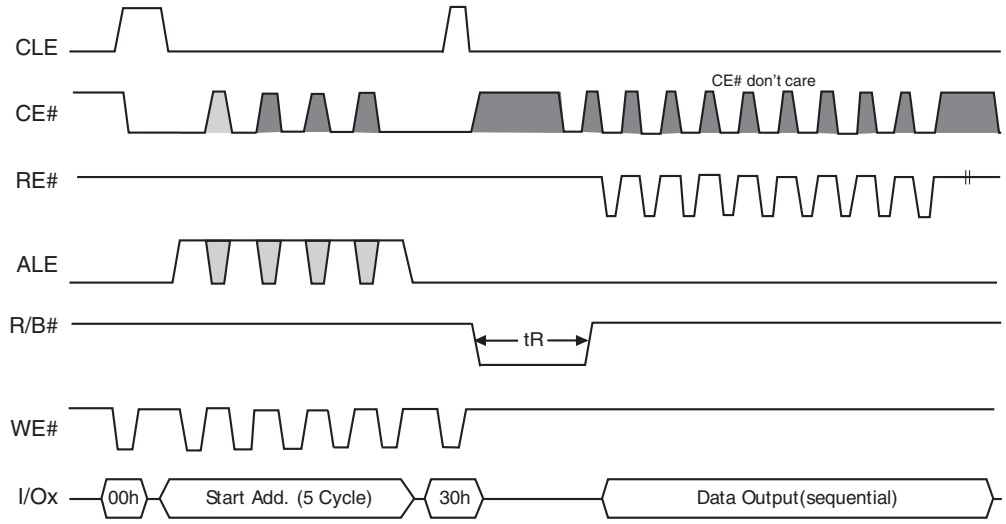

Figure 8.3 Page Programming Within a Block

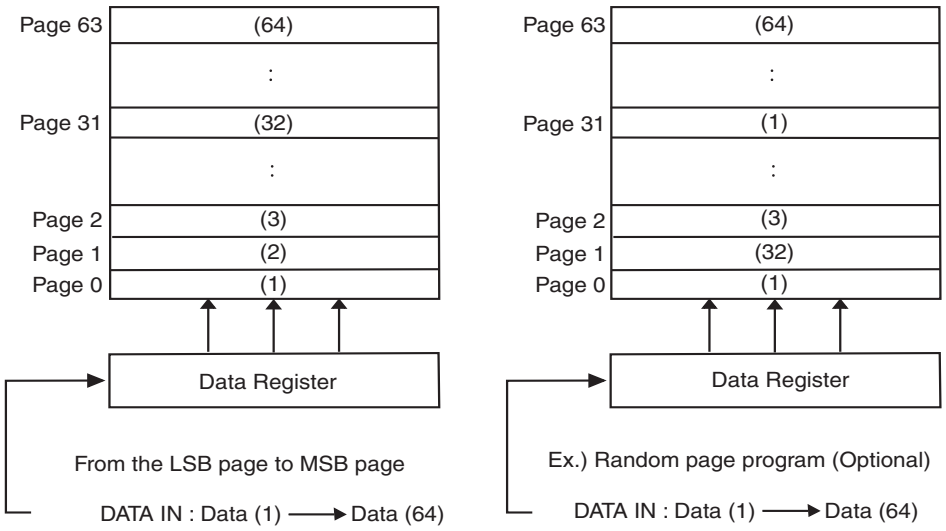

9. Error Management

9.1 System Bad Block Replacement

Over the lifetime of the device, additional Bad Blocks may develop. In this case, each bad block has to be replaced by copying any valid data to a new block. These additional Bad Blocks can be identified whenever a program or erase operation reports “Fail” in the Status Register.

The failure of a page program operation does not affect the data in other pages in the same block, thus the block can be replaced by re-programming the current data and copying the rest of the replaced block to an available valid block. Refer to Table 9.1 and Figure 9.1 for the recommended procedure to follow if an error occurs during an operation.

Table 9.1 Block Failure

Operation	Recommended Procedure
Erase	Block Replacement
Program	Block Replacement
Read	ECC (1 bit / 512+16 byte)

Figure 9.1 Bad Block Replacement

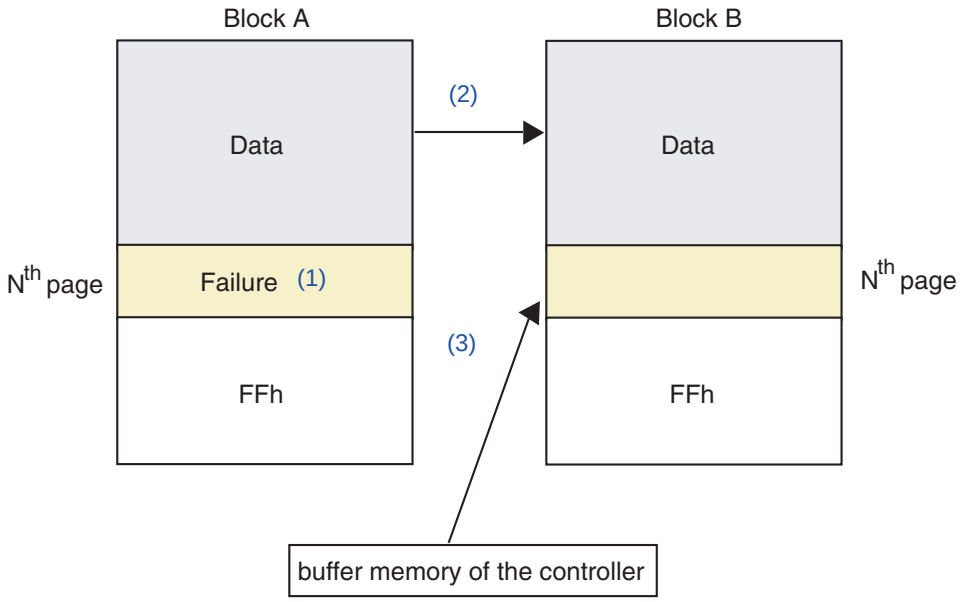

Notes:

1. *An error occurs on the Nth page of Block A during a program operation.*
2. *Data in Block A is copied to the same location in Block B, which is a valid block.*
3. *The Nth page of block A, which is in controller buffer memory, is copied into the Nth page of Block B.*
4. *Bad block table should be updated to prevent from erasing or programming Block A.*

9.2 Bad Block Management

Devices with Bad Blocks have the same quality level and the same AC and DC characteristics as devices where all the blocks are valid. A Bad Block does not affect the performance of valid blocks because it is isolated from the bit line and common source line by a select transistor. The devices are supplied with all the locations inside valid blocks erased (FFh). The Bad Block Information is written prior to shipping. Any block where the 1st byte in the spare area of the 1st or 2nd or last page does not contain FFh is a Bad Block. That is, if the first page has an FF value and should have been a non-FF value, then the non-FF value in the second page or the last page will indicate a bad block.The Bad Block Information must be read before any erase is attempted, as the Bad Block Information may be erased. For the system to be able to recognize the Bad Blocks based on the original information, it is recommended to create a Bad Block table following the flowchart shown in Figure 9.2. The host is responsible to detect and track bad blocks, both factory bad blocks and blocks that may go bad during operation. Once a block is found to be bad, data should not be written to that block.The 1st block, which is placed on 00h block address is guaranteed to be a valid block.

Figure 9.2 Bad Block Management Flowchart

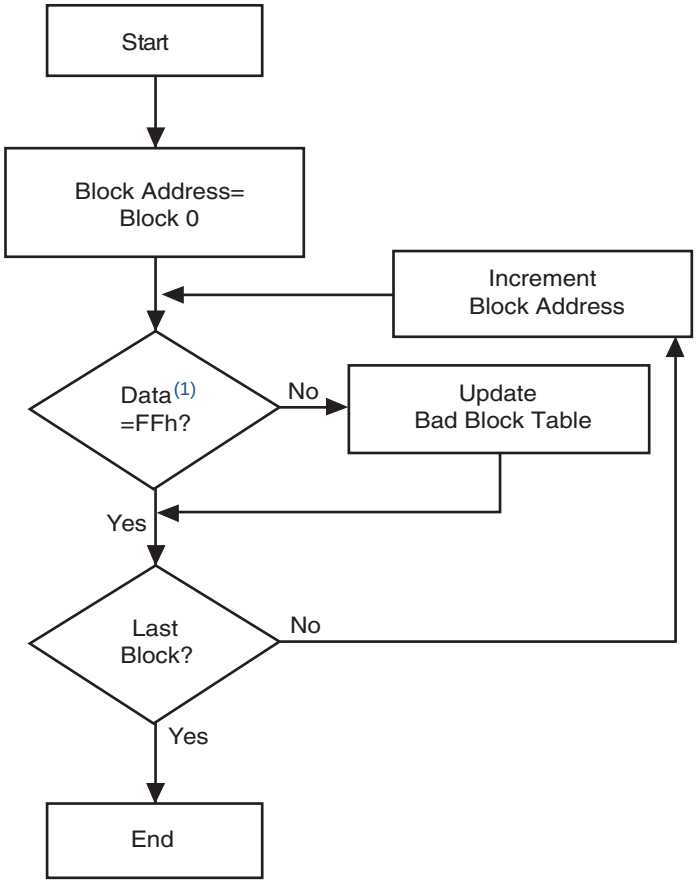

Note:

1. Check for FFh at the 1st byte in the spare area of the 1st, 2nd, and last pages.

10. Ordering Information

The ordering part number is formed by a valid combination of the following:

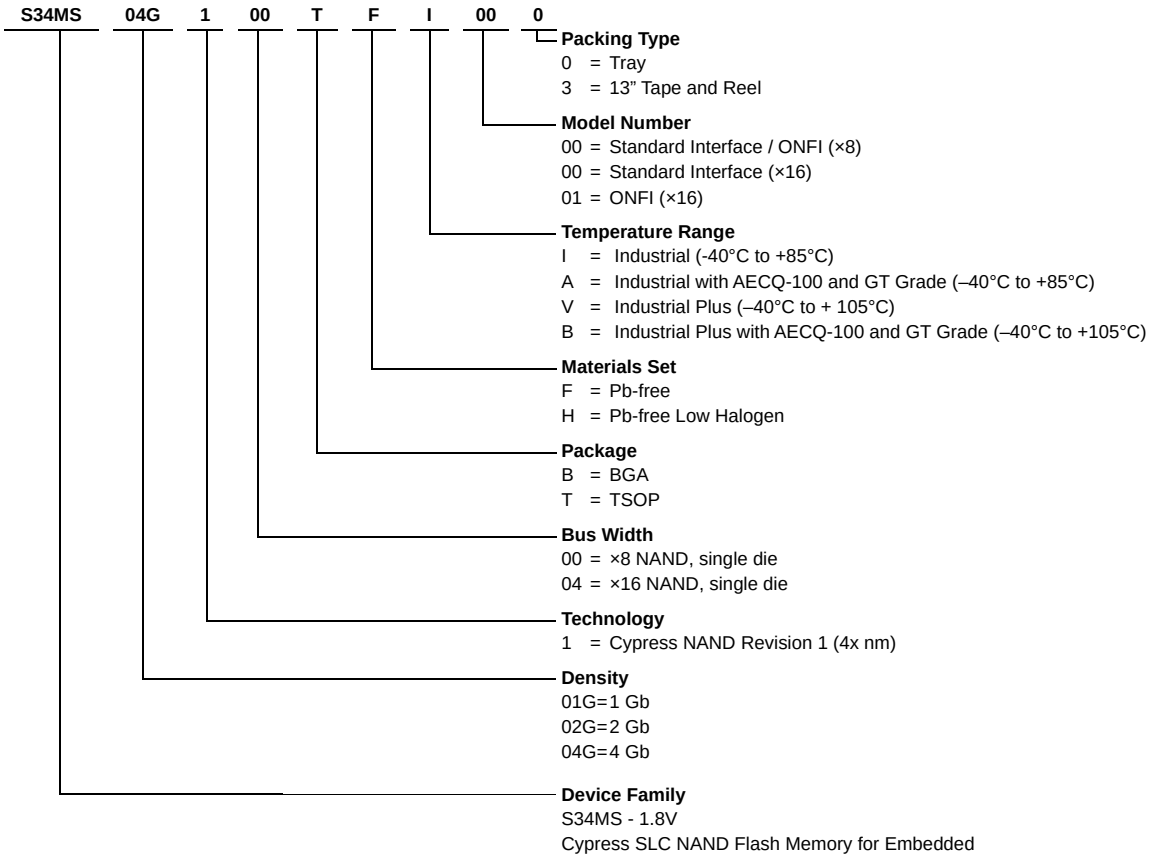

Valid Combinations

Valid Combinations list configurations planned to be supported in volume for this device. Consult your local sales office to confirm availability of specific valid combinations and to check on newly released combinations.

Valid Combinations								
Device Family	**Density**	**Technology**	**Bus Width**	**Package Type**	**Temperature Range**	**Additional Ordering Options**	**Packing Type**	**Package Description**
S34MS	01G	1	00, 04	TF, BH	I	00, 01	0, 3	TSOP, BGA (1)
	02G				A (2)			
	04G				V, B (2)(3)			

Notes:

1. *BGA package marking omits the leading “S34” and the Packing Type designator from the ordering part number.*
2. *A, V, B: 4G ×8 (00 in bus width) available.*
3. *S34MS01G1 @ 105°C (V) and 105°C GT-Grade (B) needs 2-bit ECC / 512+16 bytes.*

11. Document History

Document Title: S34MS01G1/S34MS02G1/S34MS04G1, 1-bit ECC, x8 and x16 I/O, 1.8V VCC SLC NAND Flash for Embedded Document Number: 002-00330				
Rev.	**ECN No.**	**Orig. of Change**	**Submission Date**	**Description of Change**
**	-	XILA	08/29/2012	Initial release
*A	-	XILA	09/06/2012	48-Pin TSOP1 Contact x8, x16 Devices figure: corrected pinouts 63-VFBGA Contact, x16 Device (Balls Down, Top View) figure - corrected pinouts Command Set: Reorganized section AC Characteristics: Corrected TALS Min and TDS Min
*B	-	XILA	10/01/2012	Addressing: Address Cycle Map — 1 Gb Device: corrected data Address Cycle Map — 2 Gb Device - corrected data Address Cycle Map — 4 Gb Device -corrected data Multiplane Program — S34MS02G1 and S34MS04G1: Added tex Block Erase: Added text Multiplane Block Erase — S34MS02G1 and S34MS04G1: Added text Copy Back Program: Added text Multiplane Copy Back Program — S34MS02G1 and S34MS04G1: Added text Multiplane Cache Program — S34MS02G1 and S34MS04G1: Added text Multiplane Page Program Operation — S34MS02G1 and S34MS04G1: Added note to Multiplane Page Program figure Added note to Multiplane Page Program (ONFI 1.0 Protocol) figure Multiplane Block Erase — S34MS02G1 and S34MS04G1: Added note to Multiplane Block Erase figure Changed note to Multiplane Block Erase (ONFI 1.0 Protocol) figure Multiplane Copy Back Program — S34MS02G1 and S34MS04G1: Added note to Multiplane Copy Back Program figure Multiplane Copy Back Program (ONFI 1.0 Protocol) figure-corrected IOx values, updated note Multiplane Cache Program — S34MS02G1 and S34MS04G1: Added note to Multiplane Cache Program figure Multiplane Cache Program (ONFI 1.0 Protocol)- removed address values from RY/BY# changed IOx value from F1h to 70h updated note
*C	-	XILA	11/30/2012	Absolute Maximum Ratings: Absolute Maximum Ratings table- updated Input or Output Voltage, and Supply Voltage values added note AC Characteristics: AC Characteristics table- updated values added note for tCOH and tRHOH DC Characteristics: DC Characteristics and Operating Conditions table- updated ICC0, ICC2, VOH, and VOH for S34MS01G1 Ordering Information: Valid Combinations table-updated Additional Ordering Options

Document Title: S34MS01G1/S34MS02G1/S34MS04G1, 1-bit ECC, x8 and x16 I/O, 1.8V VCC SLC NAND Flash for Embedded Document Number: 002-00330				
Rev.	**ECN No.**	**Orig. of Change**	**Submission Date**	**Description of Change**
*D	-	XILA	12/19/2012	Command Set: Added Page Reprogram command Reorganized Command Set table Page Reprogram: Moved section Added paragraph Copy Back Program: Added paragraph Reset: Updated paragraph Read ID2: Added text Read Parameter Page: Parameter Page Description table- fixed Values of Bytes 6-7 and 254-255 fixed Description of Bytes 129-130 and 131-132 DC Characteristics: DC Characteristics and Operating Conditions table- Power-On Reset Current (S34ML01G1): removed row Operating Current: removed ICC1: tRC = tRC (min) Input Leakage Current: removed VIN = 0 to VCC (max) Output Leakage Current: removed VOUT = 0 to VCC (max)Output High Voltage: removed IOH = 100 µA, IOH = -400 µA, and IOH = 400 µA rows Output Low Voltage: removed IOL = 2.1 mA row Output Low Current (R/B#): removed VOL = 0.4V row AC Characteristics: AC Characteristics table-added note Page Read Operation: Page Read Operation (Read One Page) figure- added note Read ID2 Operation Timing: Read ID2 Operation Timing figure- replaced tWHR with tR and added R/B# timing signal added note Bad Block Management: Added text Bad Block Management Flowchart-updated note
*E	-	XILA	08/09/2013	Global: Data Sheet designation updated from Advance Information to Preliminary Note that the S34MS04G1 is in the Advanced Information designation Distinctive Characteristics: Security: removed Serial number (unique ID) Operating Temperature: removed Commercial and Extended temperatures Performance: Updated Reliability General Description: Updated text Removed bullets: ReadID2 extension and Serial number (unique identifier) Addressing: Appended Note in all Address Cycle Map tables Added text to Bus Cycle column in all Address Cycle Map tables Command Set: Command Set table- added data to 'Acceptable Command during Busy' column removed Nth Page entries Changed status of Cache Program (End) and Cache Program (Start) / (Continue) to 'Supported on S34ML01G1' Page Read: Updated text Page Program: Added paragraph Multiplane Program — S34MS02G1 and S34MS04G1: Added paragraph

Document Title: S34MS01G1/S34MS02G1/S34MS04G1, 1-bit ECC, x8 and x16 I/O, 1.8V VCC SLC NAND Flash for Embedded Document Number: 002-00330				
Rev.	**ECN No.**	**Orig. of Change**	**Submission Date**	**Description of Change**
*E (continued)	-	XILA	08/09/2013	Page Reprogram — S34MS02G1 and S34MS04G1: Added paragraph Corrected Page Reprogram figure Corrected Page Reprogram with Data Manipulation figure Block Erase: Added paragraph Multiplane Block Erase — S34MS02G1 and S34MS04G1: Added paragraph Copy Back Program: Added paragraph Multiplane Copy Back Program — S34MS02G1 and S34MS04G1: Added paragraph Read Status Register Field Definition: Updated Status Register Coding table Cache Program: Added paragraph Multiplane Cache Program — S34MS02G1 and S34MS04G1: Added paragraph Read ID: Read ID Bytes table: updated Description Read Parameter Page: Parameter Page Description table: corrected values for bits 6-7, 8-9, 129-130; bits 131-132; and bits 254-255 Ready/Busy: Updated section Updated Ready/Busy Pin Electrical Application figure Electrical Characteristics: Modified Valid Blocks table Updated Absolute Maximum Ratings table AC Test Conditions table: corrected Output Load CL value AC Characteristics: AC Characteristics table: added Note Data Output Cycle Timing (CLE=L, WE#=H, ALE=L, WP#=H): Data Output Cycle Timing figure: removed Note Multiplane Page Program Operation — S34MS02G1 and S34MS04G1: Updated Multiplane Page Program figure Corrected Multiplane Page Program (ONFI 1.0 Protocol) figure Copy Back Read with Optional Data Readout: Corrected Copy Back Read with Optional Data Readout figure Copy Back Program Operation With Random Data Input: Modified Copy Back Program Operation With Random Data Input figure, Read Status Register Timing: Status / EDC Read Cycle figure: removed Note, Removed Read Status Enhanced Cycle figure, Read Cache: Updated Read Cache Operation Timing figure, Removed Cache Timing heading Cache Program: Cache Program figure: corrected I/Ox timing Multiplane Cache Program — S34MS02G1 and S34MS04G1:Multiplane Cache Program figure: corrected I/Ox timing Multiplane Cache Program (ONFI 1.0 Protocol) figure: corrected I/Ox timing Read ID Operation Timing: Read ID Operation Timing figure: corrected Device Code data, Read Parameter Page Timing: Added Note to Read Parameter Page Timing figure, One-Time Programmable (OTP) Entry: Added Note stating that the OTP feature in the S34MS01G1 does not have nonvolatile protection Physical Interface: Updated figures: TS/TSR 48 — 48-lead Plastic Thin Small Outline, 12 x 20 mm, Package Outline VBM063 — 63-Pin BGA, 11 mm x 9 mm Package System Interface: Updated Read Operation with CE# Don't Care figure Ordering Information: Clarified Materials Set: H = Lead (Pb)-free and Low Halogen Added Note to Valid Combinations table
*F	-	XILA	06/24/2014	Global**:** Added Automotive temperature option
*G	-	XILA	10/28/2014	Global: Data Sheet designation updated from Preliminary to Full Production

Document Title: S34MS01G1/S34MS02G1/S34MS04G1, 1-bit ECC, x8 and x16 I/O, 1.8V VCC SLC NAND Flash for Embedded Document Number: 002-00330				
Rev.	**ECN No.**	**Orig. of Change**	**Submission Date**	**Description of Change**
*H	4955758	XILA	10/15/2015	Updated to Cypress template.
*I	5260112	XILA	05/09/2016	Updated *Distinctive Characteristics*: Replaced “Automotive” with “Industrial Plus” under “Operating Temperature”. Updated *Command Set*: Updated *Read Parameter Page*: Updated description. Updated *Ordering Information*: Updated definitions for “A”, “V” and “B” under “Temperature Range”. Updated to new template.
*J	5409174	XILA	08/30/2016	Updated Reliability features in *Performance*.
*K	5246984	AESATMP7	04/20/2017	Updated Cypress Logo and Copyright.

.

Sales, Solutions, and Legal Information

Worldwide Sales and Design Support

Cypress maintains a worldwide network of offices, solution centers, manufacturer's representatives, and distributors. To find the office closest to you, visit us at Cypress Locations.

Products

ARM® Cortex® Microcontrollers	cypress.com/arm
Automotive	cypress.com/automotive
Clocks & Buffers	cypress.com/clocks
Interface	cypress.com/interface
Internet of Things	cypress.com/iot
Memory	cypress.com/memory
Microcontrollers	cypress.com/mcu
PSoC	cypress.com/psoc
Power Management ICs	cypress.com/pmic
Touch Sensing	cypress.com/touch
USB Controllers	cypress.com/usb
Wireless Connectivity	cypress.com/wireless

PSoC®Solutions

PSoC 1 | PSoC 3 | PSoC 4 | PSoC 5LP | PSoC 6

Cypress Developer Community

Forums | WICED IoT Forums | Projects | Video | Blogs | Training | Components

Technical Support

cypress.com/support

© Cypress Semiconductor Corporation, 2012-2017. This document is the property of Cypress Semiconductor Corporation and its subsidiaries, including Spansion LLC ("Cypress"). This document, including any software or firmware included or referenced in this document ("Software"), is owned by Cypress under the intellectual property laws and treaties of the United States and other countries worldwide. Cypress reserves all rights under such laws and treaties and does not, except as specifically stated in this paragraph, grant any license under its patents, copyrights, trademarks, or other intellectual property rights. If the Software is not accompanied by a license agreement and you do not otherwise have a written agreement with Cypress governing the use of the Software, then Cypress hereby grants you a personal, non-exclusive, nontransferable license (without the right to sublicense) (1) under its copyright rights in the Software (a) for Software provided in source code form, to modify and reproduce the Software solely for use with Cypress hardware products, only internally within your organization, and (b) to distribute the Software in binary code form externally to end users (either directly or indirectly through resellers and distributors), solely for use on Cypress hardware product units, and (2) under those claims of Cypress's patents that are infringed by the Software (as provided by Cypress, unmodified) to make, use, distribute, and import the Software solely for use with Cypress hardware products. Any other use, reproduction, modification, translation, or compilation of the Software is prohibited.

TO THE EXTENT PERMITTED BY APPLICABLE LAW, CYPRESS MAKES NO WARRANTY OF ANY KIND, EXPRESS OR IMPLIED, WITH REGARD TO THIS DOCUMENT OR ANY SOFTWARE OR ACCOMPANYING HARDWARE, INCLUDING, BUT NOT LIMITED TO, THE IMPLIED WARRANTIES OF MERCHANTABILITY AND FITNESS FOR A PARTICULAR PURPOSE. To the extent permitted by applicable law, Cypress reserves the right to make changes to this document without further notice. Cypress does not assume any liability arising out of the application or use of any product or circuit described in this document. Any information provided in this document, including any sample design information or programming code, is provided only for reference purposes. It is the responsibility of the user of this document to properly design, program, and test the functionality and safety of any application made of this information and any resulting product. Cypress products are not designed, intended, or authorized for use as critical components in systems designed or intended for the operation of weapons, weapons systems, nuclear installations, life-support devices or systems, other medical devices or systems (including resuscitation equipment and surgical implants), pollution control or hazardous substances management, or other uses where the failure of the device or system could cause personal injury, death, or property damage ("Unintended Uses"). A critical component is any component of a device or system whose failure to perform can be reasonably expected to cause the failure of the device or system, or to affect its safety or effectiveness. Cypress is not liable, in whole or in part, and you shall and hereby do release Cypress from any claim, damage, or other liability arising from or related to all Unintended Uses of Cypress products. You shall indemnify and hold Cypress harmless from and against all claims, costs, damages, and other liabilities, including claims for personal injury or death, arising from or related to any Unintended Uses of Cypress products.

Cypress, the Cypress logo, Spansion, the Spansion logo, and combinations thereof, WICED, PSoC, CapSense, EZ-USB, F-RAM, and Traveo are trademarks or registered trademarks of Cypress in the United States and other countries. For a more complete list of Cypress trademarks, visit cypress.com. Other names and brands may be claimed as property of their respective owners.