molex
one company › a world of innovation

This document was generated on 06/04/2010

PLEASE CHECK WWW.MOLEX.COM FOR LATEST PART INFORMATION

Part Number: 0512811694

Status: Active

Overview:

Description: 0.50mm (.020") Pitch FFC/FPC Connector, SMT, Right Angle, Non-ZIF, Dual Contact Style, 1.20mm (.047") Mated Height, 16 Circuits, Lead-free, Gold (Au) Plating

General

Product Family	FFC/FPC Connectors
Series	51281
Overview	ffc_fpc_smt
Product Name	N/A

Physical

Circuits (Loaded)	16
Color - Resin	Natural
Contact Position	Dual
Durability (mating cycles max)	20
Entry Angle	90° Angle
Mated Height (in)	0.047 In
Mated Height (mm)	1.20 mm
Material - Metal	Phosphor Bronze
Material - Plating Mating	Gold
Material - Plating Termination	Tin
Material - Resin	High Temperature Thermoplastic
Number of Rows	1
Orientation	Right Angle
PC Tail Length (in)	0.020 In
PC Tail Length (mm)	0.50 mm
PCB Locator	No
PCB Retention	Yes
Packaging Type	Embossed Tape on Reel
Pitch - Mating Interface (in)	0.020 In
Pitch - Mating Interface (mm)	0.50 mm
Plating min: Mating (µin)	4
Plating min: Mating (µm)	0.1
Plating min: Termination (µin)	40
Plating min: Termination (µm)	1
Polarized to PCB	Yes
Stackable	No
Surface Mount Compatible (SMC)	N/A
Temperature Range - Operating	-20°C to +85°C
Termination Interface: Style	Surface Mount
Wire/Cable Type	FFC/FPC

Electrical

Current - Maximum per Contact	0.5A
Voltage - Maximum	50V

Material Info

Reference - Drawing Numbers

Packaging Specification	SPK-51281-001
Product Specification	PS-51281-003, RPS-51281-016, RPS-51281-017, RPS-51281-018
Sales Drawing	SD-51281-011, SD-51281-012

EU RoHS
ELV and RoHS Compliant
REACH SVHC
Not Reviewed
Halogen-Free Status
Not Reviewed

China RoHS

Need more information on product environmental compliance?

Email productcompliance@molex.com
For a multiple part number RoHS Certificate of Compliance, click here

Please visit the Contact Us section for any non-product compliance questions.

Search Parts in this Series
51281Series

This document was generated on 06/04/2010
PLEASE CHECK WWW.MOLEX.COM FOR LATEST PART INFORMATION

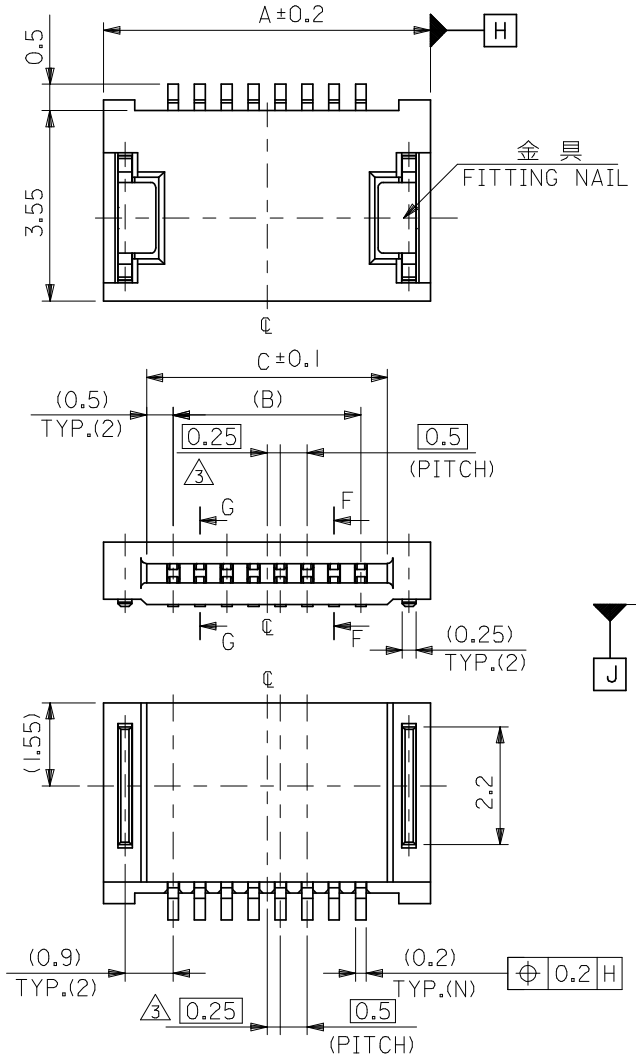

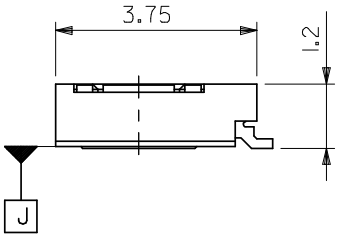

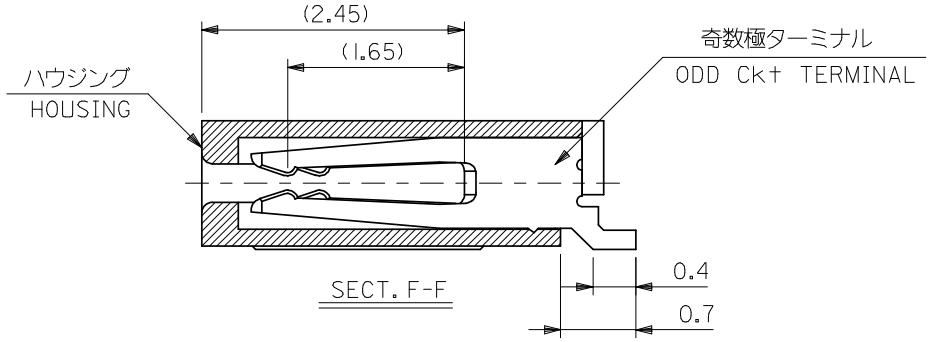

SECT. F-F

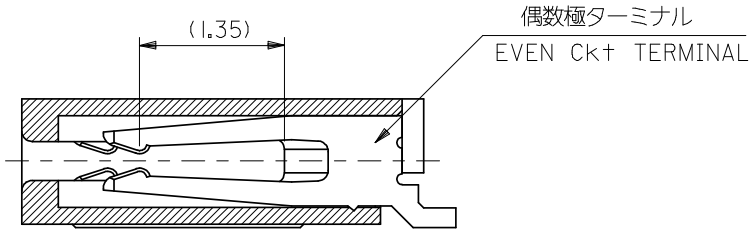

SECT. G-G

C	B	A	EMBOSSED TAPE ORDER No. オーダー番号	MATERIAL NO.	CIRCUIT
13.5	12.5	15.1	51281-2694	51281-2640	26
12.5	11.5	14.1	51281-2494	51281-2440	24
11.5	10.5	13.1	51281-2294	51281-2240	22
10.5	9.5	12.1	51281-2094	51281-2040	20
9.5	8.5	11.1	51281-1894	51281-1840	18
8.5	7.5	10.1	51281-1694	51281-1640	16
7.5	6.5	9.1	51281-1494	51281-1440	14
6.5	5.5	8.1	51281-1294	51281-1240	12
5.5	4.5	7.1	51281-1094	51281-1040	10
5.0	4.0	6.6	51281-0994	51281-0940	9
4.5	3.5	6.1	51281-0894	51281-0840	8
3.5	2.5	5.1	51281-0694	51281-0640	6
3.0	2.0	4.6	51281-0594	51281-0540	5

51281-**40 | MODEL NO.

REVISED
EC NO: J2008-4308 2008/06/27
DRWN:MNABEI 2008/06/30
CH'KD:THARUYAMA 2008/06/30
APPR:NUKITA 2008/06/30
DESCRIPTION
REV

GENERAL TOLERANCES (UNLESS SPECIFIED)

10 UNDER	±0.2
10 OVER 30 UNDER	±0.25
30 OVER	±0.3
ANGULAR ±3 °	

DRAFT WHERE APPLICABLE MUST REMAIN WITHIN DIMENSIONS

DIMENSION STYLE: MM ONLY
SCALE: ---
DESIGN UNITS: METRIC
THIRD ANGLE PROJECTION

DRAWN BY: KENSUZUKI DATE: 2004/10/19
CHECKED BY: NUKITA DATE: 2004/10/19
APPROVED BY: NUKITA DATE: 2004/10/19

TITLE: 0.5 FPC CONN NON-ZIF HSG ASSY (HGT=1.2MM) -LEAD FREE-

molex MOLEX INCORPORATED

MATERIAL NO.: SEE TABLE
DOCUMENT NO.: SD-51281-011
SHEET NO.: 1 OF 2
SIZE: A3

THIS DRAWING CONTAINS INFORMATION THAT IS PROPRIETARY TO MOLEX INCORPORATED AND SHOULD NOT BE USED WITHOUT WRITTEN PERMISSION

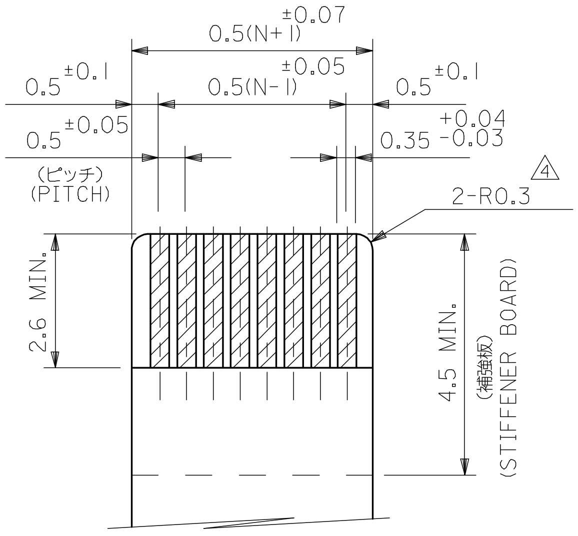

適合ＦＰＣ推奨寸法
APPLICABLE FPC
RECOMMENDED DIMENSION
(仕上がり厚さ：0.3 ±0.03)
(THICKNESS:0.3 ±0.03)

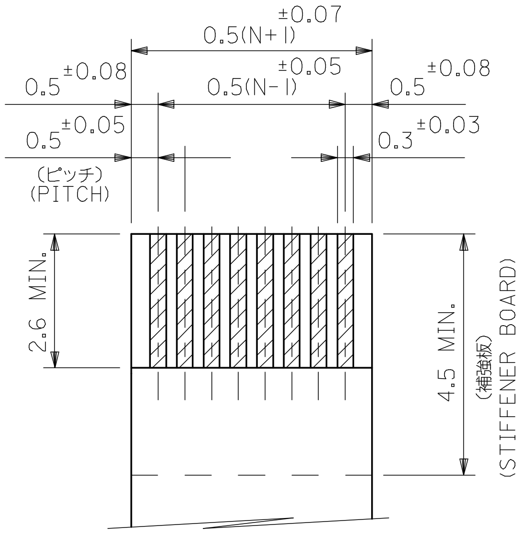

適合ＦＦＣ推奨寸法
APPLICABLE FFC
RECOMMENDED DIMENSION
(仕上がり厚さ：0.3 ±0.03)
(THICKNESS:0.3 ±0.03)

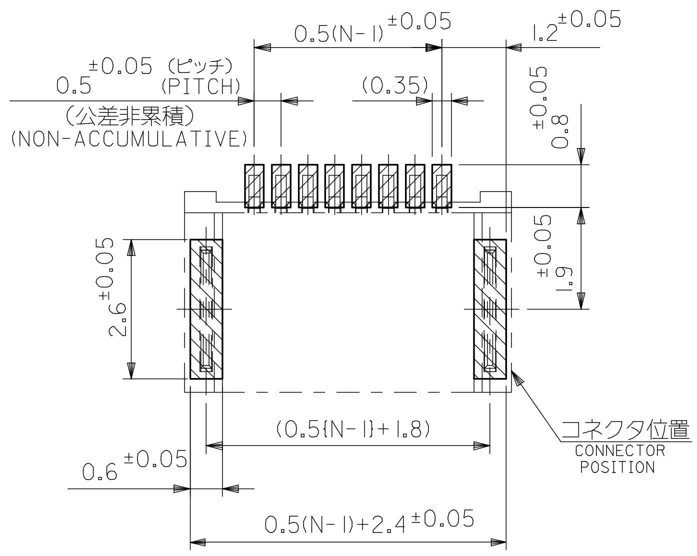

参考基板レイアウト図
RECOMMENDED P.C.BOARD LAYOUT
(マウント面)
(MOUNTING SIDE)

注記 NOTES

1. 使用材料 MATERIAL
ハウジング ：液晶ポリマー ガラス充填 ＵＬ９４Ｖ－０
HOUSING : LIQUID CRYSTAL POLYMER (GRASS FILLED) UL94V-0
ターミナル ：リン青銅（ｔ＝０．２），ニッケル下地 コンタクト部：金メッキ
テール部：錫メッキ
TERMINAL : PHOSPHOR-BRONZE ,CONTACT : GOLD
TAIL : TIN
OVER NICKEL PLATING
金具 ： リン青銅（ｔ＝０．２５），ニッケル下地 純錫メッキ
FITTING NAIL : PHOSPHOR-BRONZE ,PURE-TIN OVER NICKEL PLATING.

2△ ソルダーテール半田付け面のズレ量、及び金具半田付け面のズレ量は、基準面 J に対し、
上方向 ０．１ＭＡＸＩＭＵＭ 下方向 ０．１５ＭＡＸＩＭＵＭ とする。
又、相互のバラツキ量は ０．１ＭＡＸＩＭＵＭ とする。
MISALIGNMENT OF SOLDER TAILS AND FITTING NAILS FROM J
UPPER DIRECTION : 0.1 MAXIMUM ,LOWER DIRECTION : 0.15 MAXIMUM.
OFFSET BETWEEN SOLDER TAILS AND FITTING NAILS : 0.1 MAXIMUM.

3△ 偶数極に適用。
TO BE APPLIED ONLY WHEN ALL CIRCUIT ARE EVEN.

4△ Ｒ０．３は、ＦＰＣの導体部にかからないこと。
R0.3 MUST NOT BE ERLAPPED TO PATTERN OF FPC.

5. ＦＰＣ／ＦＦＣについて：
打抜き方向は導体側から補強板側を推奨いたします。
導体部については軟銅箔35μmまたは50μm
メッキ厚 0.1μm 金メッキ（電気メッキ）
を推奨いたします。
RECOMMENDED PUNCHER DIRECTION :
FROM CONDUCTOR SIDE TO STIFFENER BOARD SIDE.
RECOMMENDED CONDUCTOR SPEC :
THICKNESS OF SOFT COPPER FOIL : 35 μm or 50 μm
GOLD PLATING : 0.1 μm (ELECTRICAL PLATING)

6. 本製品は５１２８１－＊＊２０の鉛フリー品である。
THIS PRODUCT IS LEAD FREE OF 51281-**20.

7. ソルダーテールの平坦度は、0.1 MAXIMUM とする。
SOLDER TAIL COPLANARITY IS 0.1 MAXIMUM.

REV	DESCRIPTION
G	REVISED EC NO: J2008-4308 DRWN:MNABEI 2008/06/27 CH'KD:THARUYAMA 2008/06/30 APPR:NUKITA 2008/06/30

GENERAL TOLERANCES (UNLESS SPECIFIED)	
10 UNDER	±0.2
10 OVER 30 UNDER	±0.25
30 OVER	±0.3
ANGULAR	±3 °
DRAFT WHERE APPLICABLE MUST REMAIN WITHIN DIMENSIONS	

MODEL NO.	51281-**40
DIMENSION STYLE	MM ONLY
SCALE	---
DESIGN UNITS	METRIC
PROJECTION	THIRD ANGLE PROJECTION
DRAWN BY / DATE	KENSUZUKI 2004/10/19
CHECKED BY / DATE	NUKITA 2004/10/19
APPROVED BY / DATE	NUKITA 2004/10/19
TITLE	0.5 FPC CONN NON-ZIF HSG ASSY (HGT=1.2MM) -LEAD FREE-
	molex MOLEX INCORPORATED
MATERIAL NO.	SEE SHEET 1
DOCUMENT NO.	SD-51281-011
SHEET NO.	2 OF 2
SIZE	A3

THIS DRAWING CONTAINS INFORMATION THAT IS PROPRIETARY TO MOLEX INCORPORATED AND SHOULD NOT BE USED WITHOUT WRITTEN PERMISSION

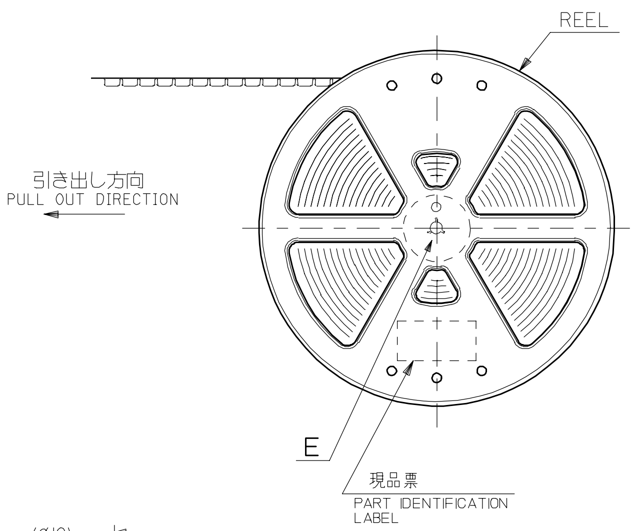

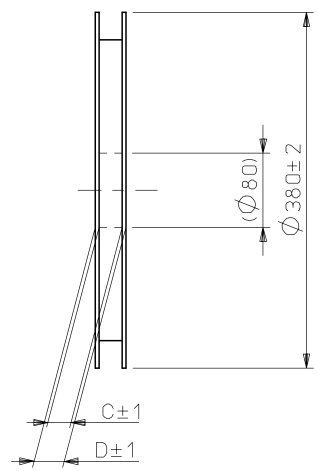

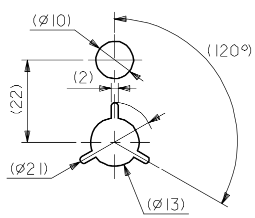

DETAIL E

NOTES

1. 製品詳細寸法については図面 SD-51281-011 を参照下さい。
   RE DETAILED DIMENSION, SEE SD-51281-011
2. 梱包数量：３０００個／リール
   NUMBER OF CONNECTORS : 3000PCS/REEL
3. リードテープ長さ LEAD TAPE LENGTH

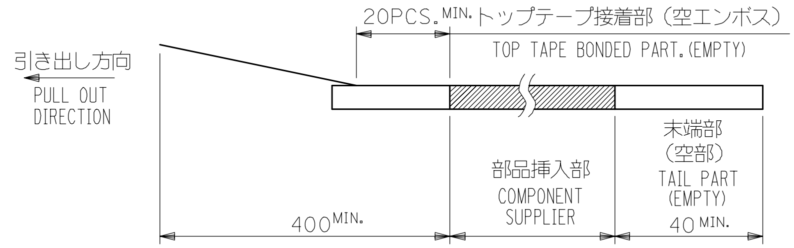

4. トップテープの剥離強度：０．１N～１．３N {１０ｇｆ～１３０ｇｆ}
   （剥離方向は下図参照）
   尚、本規格値は出荷時に適用。（但し、輸送時に剥離が発生しないこと。）
   PEELING OFF FORCE OF TOP TAPE : 0.1N～1.3N {10gf～130gf}
   (PEELING DIRECTION AS SHOWN IN FOLLOWING FIG.)
   THIS REQUIREMENT SHOULD BE APPLIED AT SHIPMENT.
   PEEL OFF SHOULD NOT BE ALLOWED , DURING TRANSPORTATION.

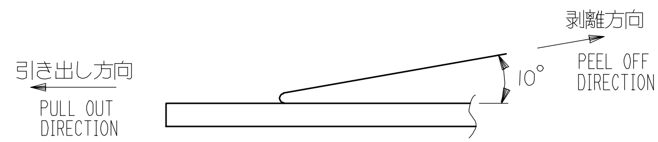

5. 材料 (MATERIAL)
   キャリアテープ(CARRIER TAPE)：ポリプロピレン(POLYPROPYLENE)
   トップテープ(TOPTAPE)： PET , PE , PEF
   リール(REEL)：ポリスチレン(PS) <リサイクル材含む>
   POLYSTYREN (PS) <RECYCLE MATERIAL CONTAINED>
6. C,D 寸法は SHEET 2 ～ 3 を参照下さい。
   SEE SHEET 2 ～ 3 (DIMENSION C,D).

REV	B
REVISED	EC NO: J2006-0559 2005/08/22; DRWN:MNABEI 2005/08/23; CH'KD:KTOYODA 2005/08/26; APPR:NUKITA

GENERAL TOLERANCES (UNLESS SPECIFIED)	
10 UNDER	±0.2
10 OVER 30 UNDER	±0.25
30 OVER	±0.3
ANGULAR	±3 °
DRAFT WHERE APPLICABLE MUST REMAIN WITHIN DIMENSIONS	

51281-**94		MODEL NO.	
DIMENSION STYLE: MM ONLY	SCALE: ---	DESIGN UNITS: METRIC	THIRD ANGLE PROJECTION
DRAWN BY: KENSUZUKI	DATE: 2004/10/19	TITLE: 0.5 FPC CONN NON-ZIF (HGT=1.2MM) EMBSTP PKG -LEAD FREE-	
CHECKED BY: NUKITA	DATE: 2004/10/19		
APPROVED BY: NUKITA	DATE: 2004/10/19	molex MOLEX INCORPORATED	
MATERIAL NO.: SEE CHART	DOCUMENT NO.: SD-51281-012		SHEET NO.: 1 OF 4
SIZE: A3	THIS DRAWING CONTAINS INFORMATION THAT IS PROPRIETARY TO MOLEX INCORPORATED AND SHOULD NOT BE USED WITHOUT WRITTEN PERMISSION		

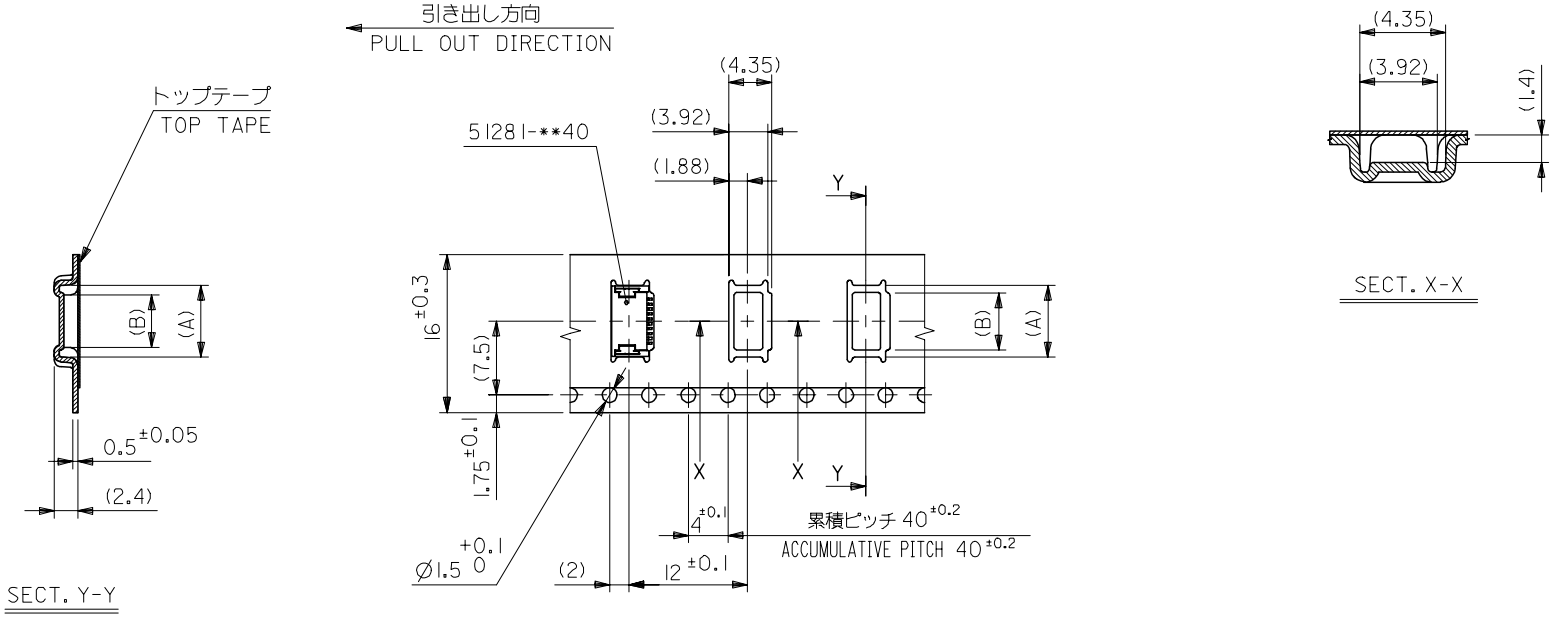

16mm幅キャリアテープ

16mm WIDTH CARRIER TAPE

キャリアテープ幅 CARRIER TAPE WIDTH	D	C	(B)	(A)	製品番号 MATERIAL No.	極数 Ck+
16	21.4	17.4	4.3	6.3	51281-0894	8
			3.3	5.3	51281-0694	6
			2.8	4.8	51281-0594	5
51281-**94					MODEL NO.	

REV	DESCRIPTION	DATE
B	REVISED EC NO: J2006-0559	2005/08/22
	DRWN:MNABEI	2005/08/23
	CHKD:KTOYODA	2005/08/26
	APPR:NUKITA	

GENERAL TOLERANCES (UNLESS SPECIFIED)

10 UNDER	±0.2
10 OVER 30 UNDER	±0.25
30 OVER	±0.3
ANGULAR ±3 °	

DRAFT WHERE APPLICABLE MUST REMAIN WITHIN DIMENSIONS

DIMENSION STYLE: MM ONLY	SCALE: ---	DESIGN UNITS: METRIC	THIRD ANGLE PROJECTION
DRAWN BY: KENSUZUK	DATE: 2004/10/19	TITLE: 0.5 FPC CONN NON-ZIF (HGT=1.2MM) EMBSTP PKG -LEAD FREE-	
CHECKED BY: NUKITA	DATE: 2004/10/19		
APPROVED BY: NUKITA	DATE: 2004/10/19	molex MOLEX INCORPORATED	
MATERIAL NO.: SEE CHART		DOCUMENT NO.: SD-51281-012	SHEET NO.: 2 OF 4
SIZE: A3	THIS DRAWING CONTAINS INFORMATION THAT IS PROPRIETARY TO MOLEX INCORPORATED AND SHOULD NOT BE USED WITHOUT WRITTEN PERMISSION		

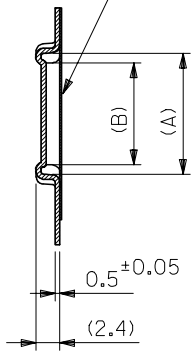

SECT. Y-Y

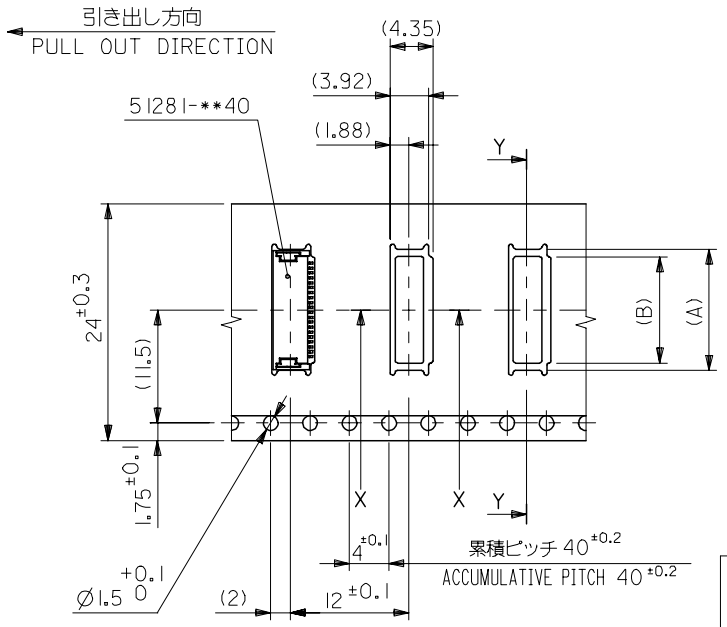

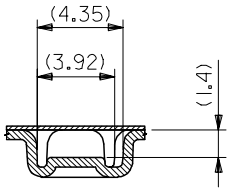

SECT. X-X

24mm幅キャリアテープ

24mm WIDTH CARRIER TAPE

キャリアテープ幅 CARRIER TAPE WIDTH	D	C	(B)	(A)	製品番号 MATERIAL No.	極数 Ck+
24	29.4	25.4	12.3	14.3	51281-2494	24
			11.3	13.3	51281-2294	22
			10.3	12.3	51281-2094	20
			9.3	11.3	51281-1894	18
			8.3	10.3	51281-1694	16
			7.3	9.3	51281-1494	14
			6.3	8.3	51281-1294	12
			5.3	7.3	51281-1094	10
			4.8	6.8	51281-0994	9
51281-**94					MODEL NO.	

REV	DESCRIPTION	DATE
B	REVISED EC NO: J2006-0559	2005/08/22
	DRWN:MNABEI	2005/08/23
	CHKD:KTOYODA	2005/08/26
	APPR:NUKITA	

GENERAL TOLERANCES (UNLESS SPECIFIED)

10 UNDER	±0.2
10 OVER 30 UNDER	±0.25
30 OVER	±0.3
ANGULAR ±3 °	

DRAFT WHERE APPLICABLE MUST REMAIN WITHIN DIMENSIONS

DIMENSION STYLE: MM ONLY	SCALE: ---	DESIGN UNITS: METRIC	THIRD ANGLE PROJECTION
DRAWN BY: KENSUZUKI	DATE: 2004/10/19	TITLE: 0.5 FPC CONN NON-ZIF (HGT=1.2MM) EMBSTP PKG -LEAD FREE-	
CHECKED BY: NUKITA	DATE: 2004/10/19		
APPROVED BY: NUKITA	DATE: 2004/10/19	molex MOLEX INCORPORATED	
MATERIAL NO.: SEE CHART		DOCUMENT NO.: SD-51281-012	SHEET NO.: 3 OF 4
SIZE: A3	THIS DRAWING CONTAINS INFORMATION THAT IS PROPRIETARY TO MOLEX INCORPORATED AND SHOULD NOT BE USED WITHOUT WRITTEN PERMISSION		

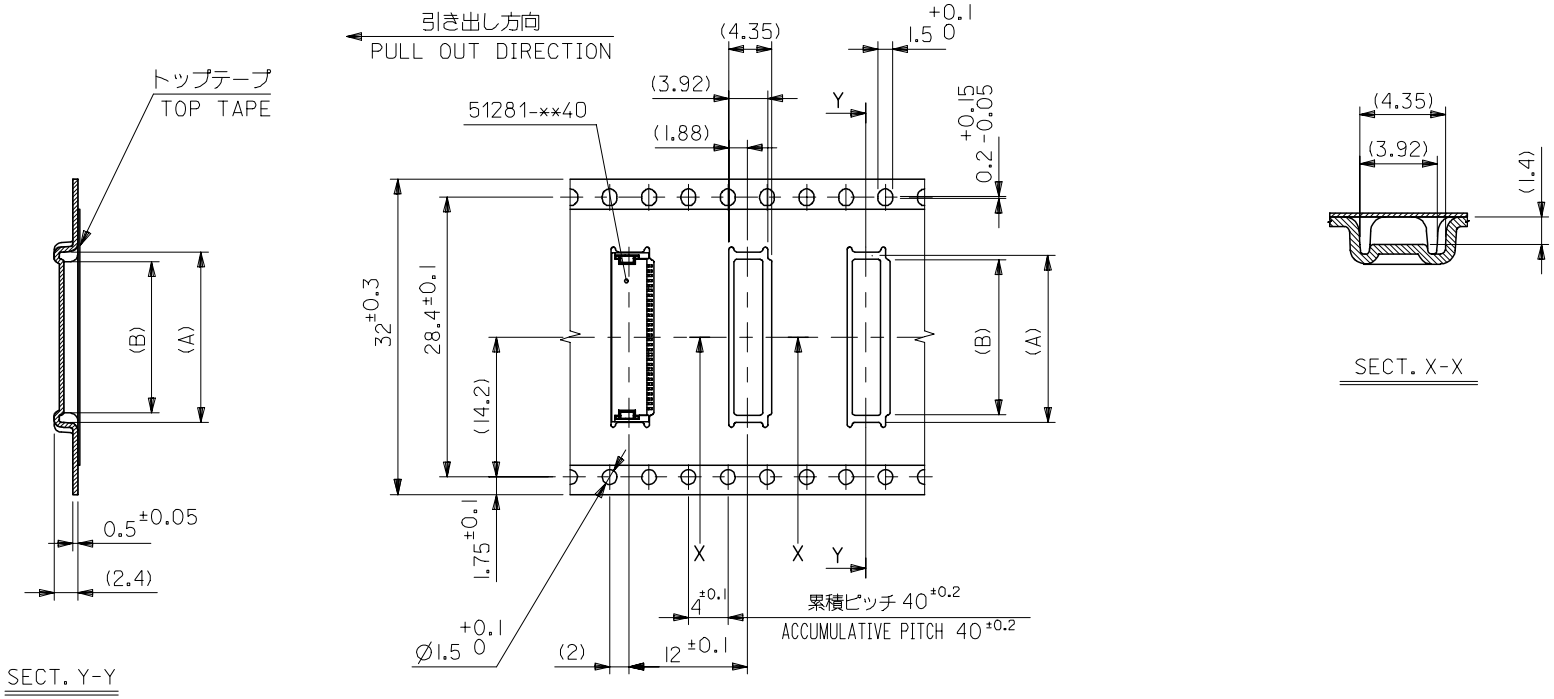

32mm幅キャリアテープ

32mm WIDTH CARRIER TAPE

キャリアテープ幅 CARRIER TAPE WIDTH	D	C	(B)	(A)	製品番号 MATERIAL No.	極数 Ck†
32	37.4	33.4	13.3	15.3	51281-2694	26

REVISED			
EC NO: J2006-0559	DRWN:MNABEI	CHKD:KTOYODA	APPR:NUKITA
2005/08/22	2005/08/23	2005/08/26	
B			

REV | DESCRIPTION

GENERAL TOLERANCES (UNLESS SPECIFIED)

10 UNDER	±0.2
10 OVER 30 UNDER	±0.25
30 OVER	±0.3
ANGULAR ±3 °	

DRAFT WHERE APPLICABLE MUST REMAIN WITHIN DIMENSIONS

DIMENSION STYLE: MM ONLY	SCALE: ---	DESIGN UNITS: METRIC	THIRD ANGLE PROJECTION
DRAWN BY: KENSUZUKI	DATE: 2004/10/19	TITLE: 0.5 FPC CONN NON-ZIF (HGT=1.2MM) EMBSTP PKG -LEAD FREE-	
CHECKED BY: NUKITA	DATE: 2004/10/19		
APPROVED BY: NUKITA	DATE: 2004/10/19	molex MOLEX INCORPORATED	
MATERIAL NO.: SEE CHART		DOCUMENT NO.: SD-51281-012	SHEET NO.: 4 OF 4
SIZE: A3			

THIS DRAWING CONTAINS INFORMATION THAT IS PROPRIETARY TO MOLEX INCORPORATED AND SHOULD NOT BE USED WITHOUT WRITTEN PERMISSION