RECTRON SEMICONDUCTOR
TECHNICAL SPECIFICATION

RM5N700IP
RM5N700LD

N-Channel Super Junction Power MOSFET Ⅱ

General Description

The series of devices use advanced super junction technology and design to provide excellent $R_{DS(ON)}$ with low gate charge. This super junction MOSFET fits the industry's AC-DC SMPS requirements for PFC, AC/DC power conversion, and industrial power applications.

V_{DS}	700	V
$R_{DS(ON)TYP.}$	840	mΩ
I_D	5	A

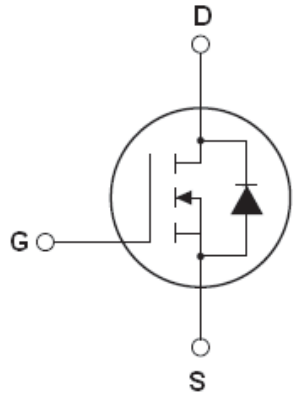

Schematic diagram

Features

- New technology for high voltage device
- Low on-resistance and low conduction losses
- Small package
- Ultra Low Gate Charge cause lower driving requirements
- 100% Avalanche Tested
- ROHS compliant

Application

- Power factor correction（PFC）
- Switched mode power supplies(SMPS)
- Uninterruptible Power Supply（UPS）

Package Marking And Ordering Information

Device	Device Package	Marking
RM5N700IP	TO-251	5N700
RM5N700LD	TO-252	5N700

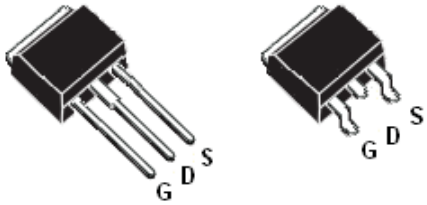

TO-251 **TO-252**

Table 1. Absolute Maximum Ratings (T_C=25℃)

Parameter	Symbol	Value	Unit
Drain-Source Voltage (V_{GS}=0V）	V_{DS}	700	V
Gate-Source Voltage (V_{DS}=0V)	V_{GS}	±30	V
Continuous Drain Current at Tc=25°C	$I_{D\ (DC)}$	5	A
Continuous Drain Current at Tc=100°C	$I_{D\ (DC)}$	3	A
Pulsed drain current **(Note 1)**	$I_{DM\ (pluse)}$	15	A
Drain Source voltage slope, VDS = 480 V, ID = 5 A, Tj = 125 °C	dv/dt	48	V/ns
Maximum Power Dissipation(Tc=25℃) Derate above 25°C	P_D	49 0.39	W W/°C
Single pulse avalanche energy **(Note2)**	E_{AS}	135	mJ
Avalanche current**(Note 1)**	I_{AR}	2.5	A

Parameter	Symbol	Value	Unit
Repetitive Avalanche energy , t_{AR} limited by T_{jmax} **(Note 1)**	E_{AR}	0.4	mJ
Operating Junction and Storage Temperature Range	T_J,T_{STG}	-55...+150	°C

Table 2. Thermal Characteristic

Parameter	Symbol	Value	Unit
Thermal Resistance，Junction-to-Case（Maximum）	R_{thJC}	2.55	°C /W
Thermal Resistance，Junction-to-Ambient （Maximum）	R_{thJA}	75	°C /W

Table 3. Electrical Characteristics (TA=25℃unless otherwise noted)

Parameter	Symbol	Condition	Min	Typ	Max	Unit
On/off states						
Drain-Source Breakdown Voltage	BV_{DSS}	V_{GS}=0V I_D=250μA	700			V
Zero Gate Voltage Drain Current(Tc=25℃)	I_{DSS}	V_{DS}=700V,V_{GS}=0V			1	μA
Zero Gate Voltage Drain Current(Tc=125℃)	I_{DSS}	V_{DS}=700V,V_{GS}=0V			50	μA
Gate-Body Leakage Current	I_{GSS}	V_{GS}=±30V,V_{DS}=0V			±100	nA
Gate Threshold Voltage	$V_{GS(th)}$	V_{DS}=V_{GS},I_D=250μA	2.5	3	3.5	V
Drain-Source On-State Resistance	$R_{DS(ON)}$	V_{GS}=10V, I_D=2.5A		840	950	mΩ
Dynamic Characteristics						
Forward Transconductance	g_{FS}	V_{DS} = 20V, I_D = 3A		4.8		S
Input Capacitance	C_{Iss}	V_{DS}=50V,V_{GS}=0V, F=1.0MHz		460		pF
Output Capacitance	C_{oss}			45		pF
Reverse Transfer Capacitance	C_{rss}			3.5		pF
Total Gate Charge	Q_g	V_{DS}=480V,I_D=5A, V_{GS}=10V		10	20	nC
Gate-Source Charge	Q_{gs}			1.6		nC
Gate-Drain Charge	Q_{gd}			4		nC
Intrinsic gate resistance	R_G	f = 1 MHz open drain		2.5		Ω
Switching times						
Turn-on Delay Time	$t_{d(on)}$	V_{DD}=380V,I_D=3A, R_G=18Ω,V_{GS}=10V		6		nS
Turn-on Rise Time	t_r			3		nS
Turn-Off Delay Time	$t_{d(off)}$			50	60	nS
Turn-Off Fall Time	t_f			9	15	nS
Source- Drain Diode Characteristics						
Source-drain current(Body Diode)	I_{SD}	T_C=25°C			5	A
Pulsed Source-drain current(Body Diode)	I_{SDM}				15	A
Forward on voltage	V_{SD}	Tj=25°C,I_{SD}=5A,V_{GS}=0V		1	1.3	V
Reverse Recovery Time	t_{rr}	Tj=25°C,I_F=5A,di/dt=100A/μs		250		nS
Reverse Recovery Charge	Q_{rr}			2.2		uC
Peak reverse recovery current	I_{rrm}			15		A

Notes: 1.Repetitive Rating: Pulse width limited by maximum junction temperature

2. Tj=25℃,VDD=50V,VG=10V, R_G=25Ω

RATING AND CHARACTERISTICS CURVES (RM5N700IP/RM5N700LD)

Figure1. Safe operating area

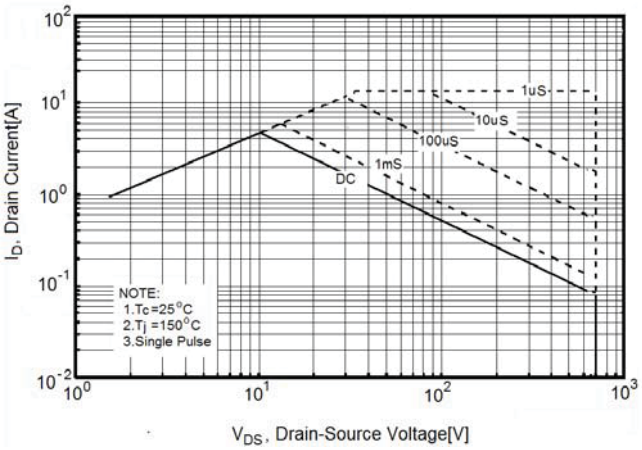

Figure2. Source-Drain Diode Forward Voltage

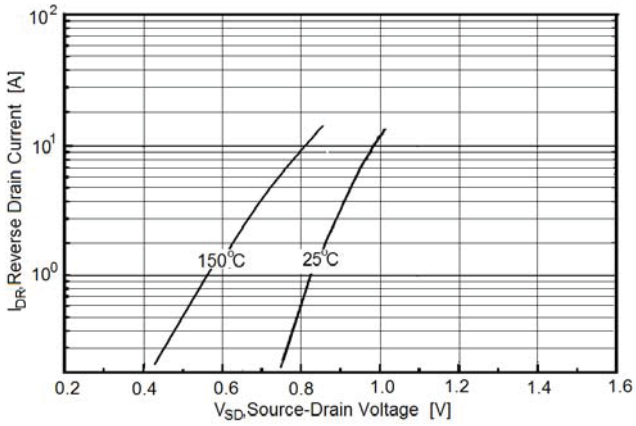

Figure3. Output characteristics

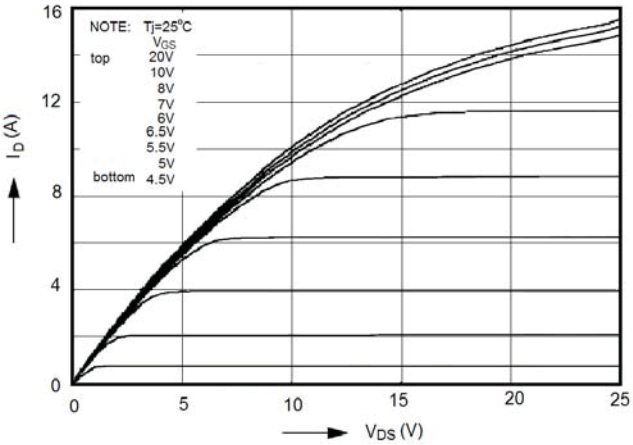

Figure4. Transfer characteristics

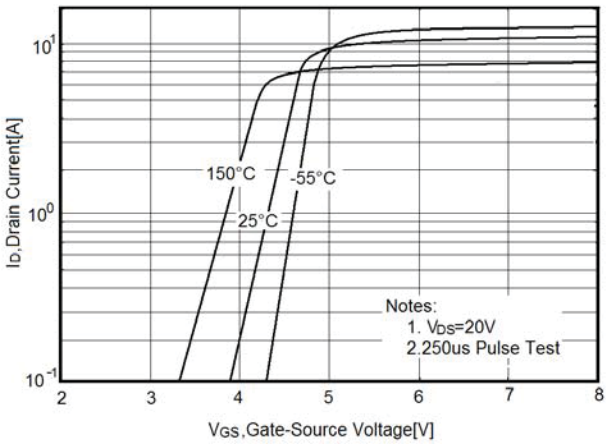

Figure5. Static drain-source on resistance

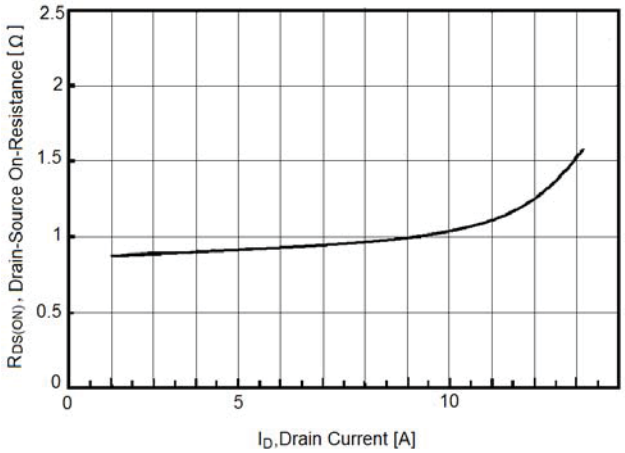

Figure6. $R_{DS(ON)}$ vs Junction Temperature

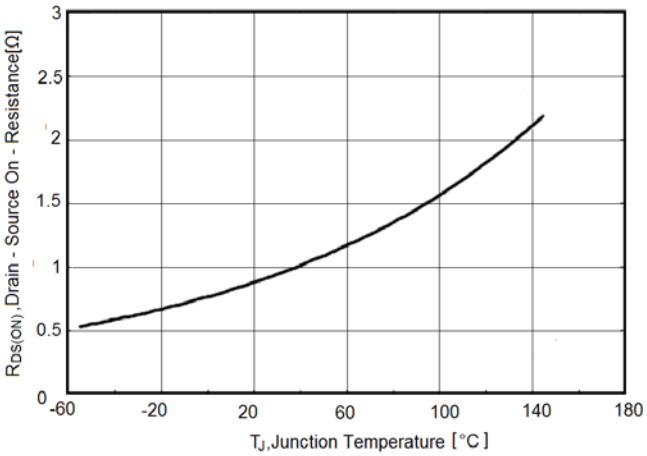

RATING AND CHARACTERISTICS CURVES (RM5N700IP/RM5N700LD)

Figure7. BV_{DSS} vs Junction Temperature

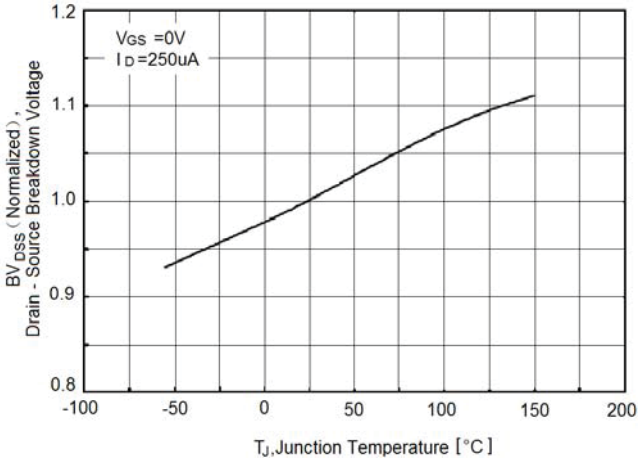

Figure8. Maximum I_D vs Junction Temperature

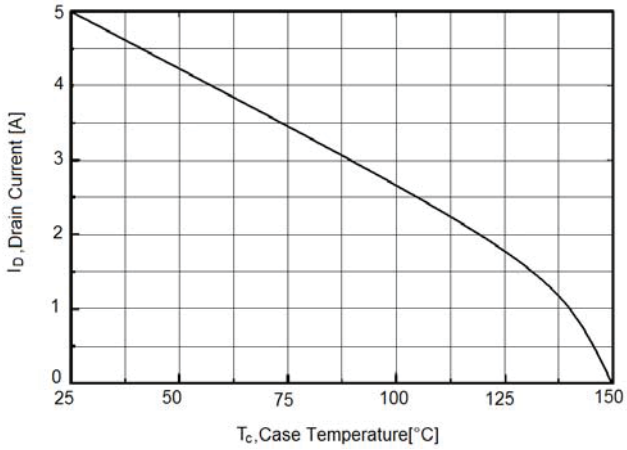

Figure9. Gate charge waveforms

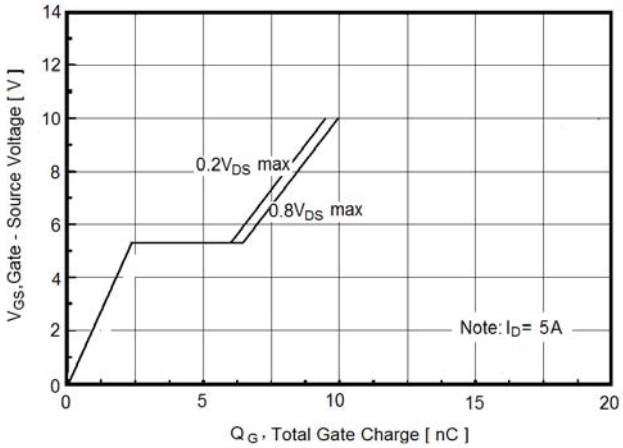

Figure10. Capacitance

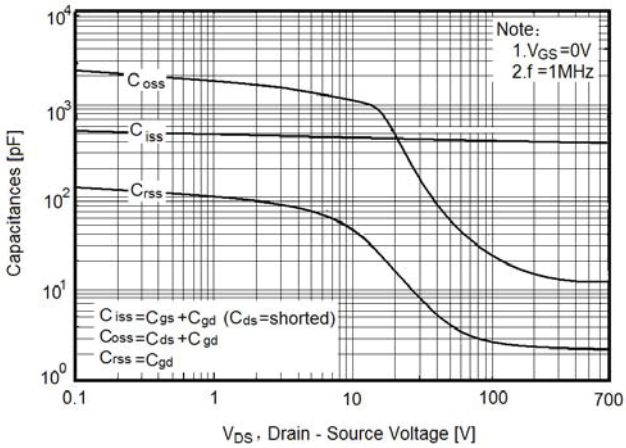

Figure11. Transient Thermal Impedance

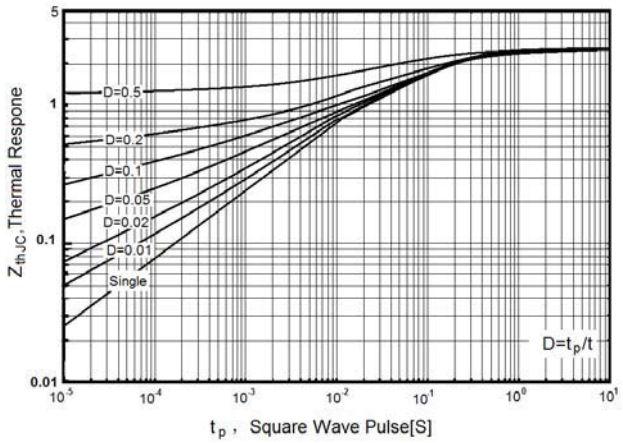

Test circuit

1）Gate charge test circuit & Waveform

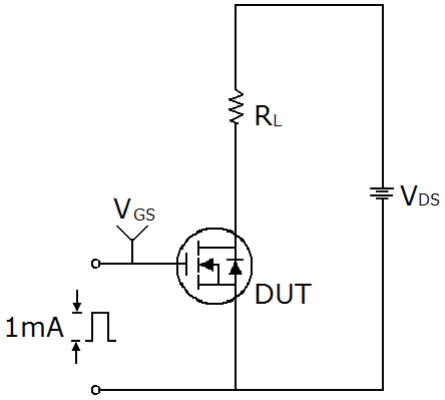

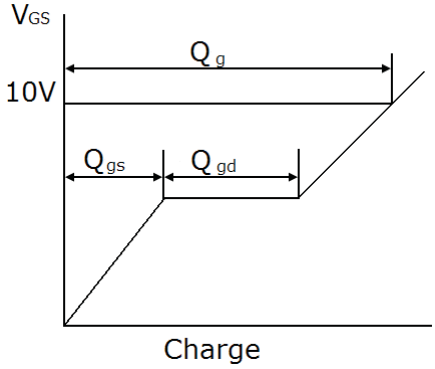

2）Switch Time Test Circuit:

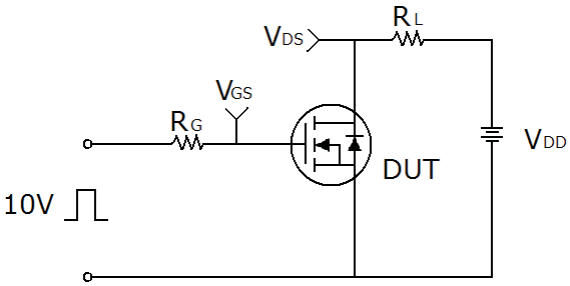

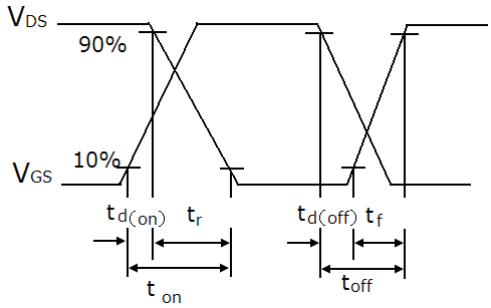

3）Unclamped Inductive Switching Test Circuit & Waveforms

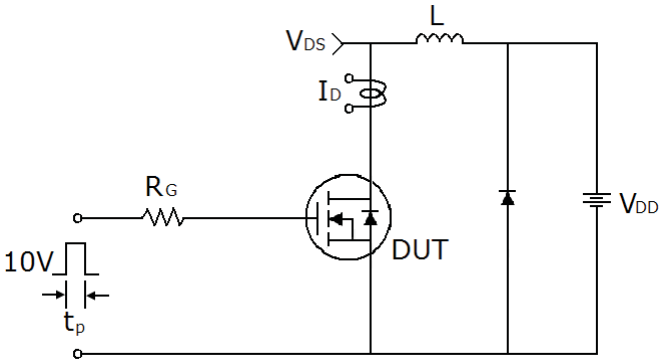

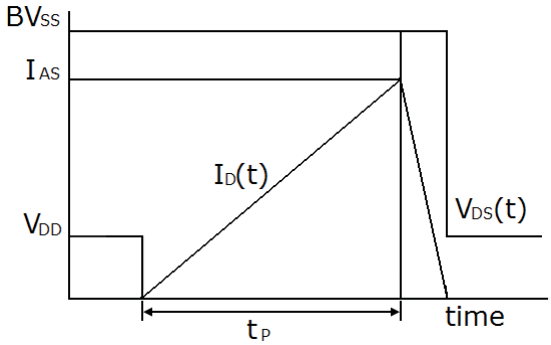

TO-251 Package Information

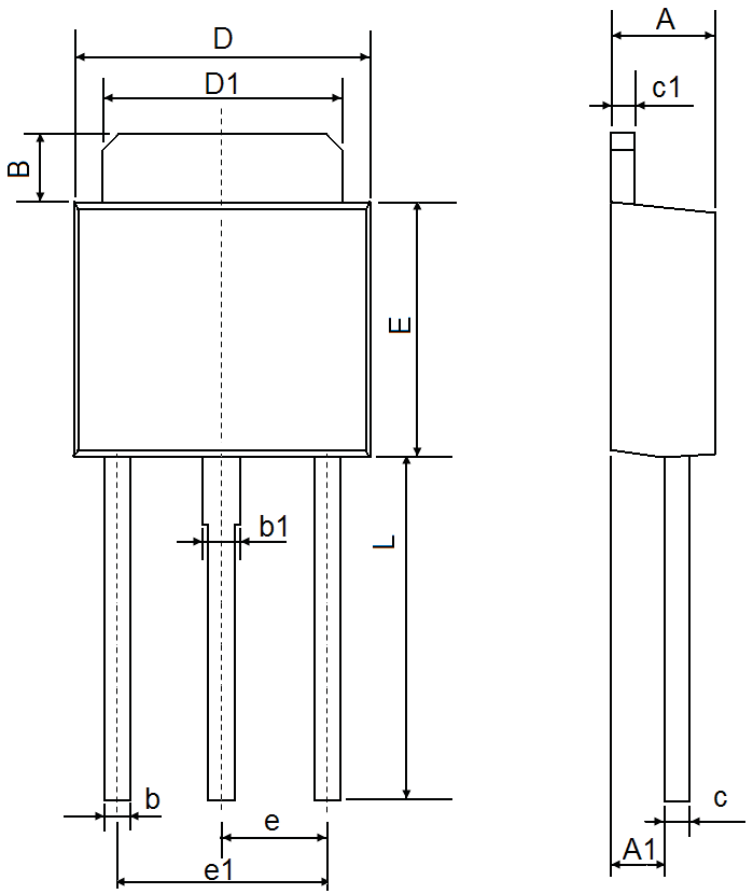

Symbol	Dimensions In Millimeters		Dimensions In Inches	
	Min.	Max.	Min.	Max.
A	2.200	2.400	0.087	0.094
A1	1.050	1.350	0.042	0.054
B	1.350	1.650	0.053	0.065
b	0.500	0.700	0.020	0.028
b1	0.700	0.900	0.028	0.035
c	0.430	0.580	0.017	0.023
c1	0.430	0.580	0.017	0.023
D	6.350	6.650	0.250	0.262
D1	5.200	5.400	0.205	0.213
E	5.400	5.700	0.213	0.224
e	2.300 TYP		0.091 TYP	
e1	4.500	4.700	0.177	0.185
L	7.500	7.900	0.295	0.311

TO-252 Package Information

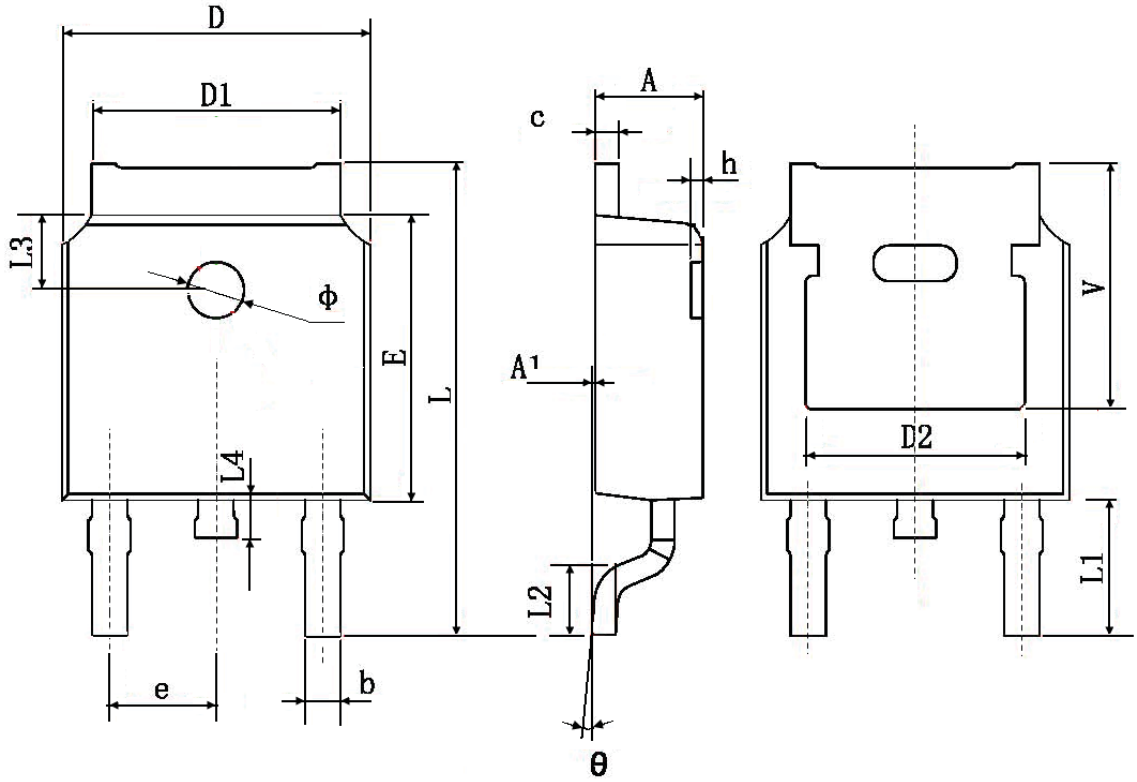

Symbol	Dimensions In Millimeters		Dimensions In Inches	
	Min.	Max.	Min.	Max.
A	2.200	2.400	0.087	0.094
A1	0.000	0.127	0.000	0.005
b	0.660	0.860	0.026	0.034
c	0.460	0.580	0.018	0.023
D	6.500	6.700	0.256	0.264
D1	5.100	5.460	0.201	0.215
D2	0.483 TYP.		0.190 TYP.	
E	6.000	6.200	0.236	0.244
e	2.186	2.386	0.086	0.094
L	9.800	10.400	0.386	0.409
L1	2.900 TYP.		0.114 TYP.	
L2	1.400	1.700	0.055	0.067
L3	1.600 TYP.		0.063 TYP.	
L4	0.600	1.000	0.024	0.039
Φ	1.100	1.300	0.043	0.051
θ	0°	8°	0°	8°
h	0.000	0.300	0.000	0.012
V	5.350 TYP.		0.211 TYP.	

DISCLAIMER NOTICE

Rectron Inc reserves the right to make changes without notice to any product specification herein, to make corrections, modifications, enhancements or other changes. Rectron Inc or anyone on its behalf assumes no responsibility or liability for any errors or inaccuracies. Data sheet specifications and its information contained are intended to provide a product description only. "Typical" parameters which may be included on RECTRON data sheets and/ or specifications can and do vary in different applications and actual performance may vary over time. Rectron Inc does not assume any liability arising out of the application or use of any product or circuit.

Rectron products are not designed, intended or authorized for use in medical, life-saving implant or other applications intended for life-sustaining or other related applications where a failure or malfunction of component or circuitry may directly or indirectly cause injury or threaten a life without expressed written approval of Rectron Inc. Customers using or selling Rectron components for use in such applications do so at their own risk and shall agree to fully indemnify Rectron Inc and its subsidiaries harmless against all claims, damages and expenditures.