3240

Data Sheet
27621.20b

CHOPPER-STABILIZED, PRECISION HALL-EFFECT SWITCH

Suffix '–LT' & '–UA' Pinning
(SOT89/TO-243AA & ultra-min SIP)

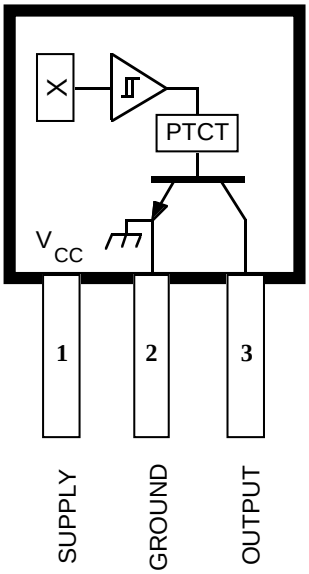

Dwg. PH-003-2

Pinning is shown viewed from branded side.

ABSOLUTE MAXIMUM RATINGS
at T_A = +25°C

Supply Voltage, V_{CC} ..... **26.5 V**
Reverse Battery Voltage, V_{RCC} ..... **-30 V**
Magnetic Flux Density, B ..... **Unlimited**
Output OFF Voltage, V_{OUT} ..... **26 V**
Continuous Output Current,
I_{OUT} ..... **25 mA***
Reverse Output Current, I_{OUT} ..... **-50 mA**
Package Power Dissipation, P_D. **See Graph**
Junction Temperature, T_J ..... **+165°C**
Operating Temperature Range, T_A
Suffix 'E–' ..... **-40°C to +85°C**
Suffix 'L–' ..... **-40°C to +150°C**
Storage Temperature Range,
T_S ..... **-65°C to +170°C**

*Internal current limiting is intended to protect the device from output short circuits.

The A3240-- Hall-effect switch is an extremely temperature-stable and stress-resistant sensor especially suited for operation over extended temperature ranges to +150°C. Superior high-temperature performance is made possible through dynamic offset cancellation, which reduces the residual offset voltage normally caused by device overmolding, temperature dependencies, and thermal stress.

The device includes on a single silicon chip a voltage regulator, Hall-voltage generator, small-signal amplifier, chopper stabilization, Schmitt trigger, and a short-circuit protected open-collector output to sink up to 25 mA. A south pole of sufficient strength will turn the output on. An on-board regulator permits operation with supply voltages of 4.2 to 24 volts.

The first character of the part number suffix determines the device operating temperature range; suffix 'E–' is for -40°C to +85°C and 'L–' is -40°C to +150°C. Three package styles provide a magnetically optimized package for most applications. Suffix '–LH' is a modified SOT23W surface-mount package, '–LT' is a miniature SOT89/TO-243AA transistor package for surface-mount applications; while suffix '–UA' is a three-lead ultra-mini-SIP for through-hole mounting.

FEATURES

- Resistant to Physical Stress
- Superior Temperature Stability
- Output Short-Circuit Protection
- Operation From Unregulated Supply
- Reverse Battery Protection
- Solid-State Reliability
- Small Size

Always order by complete part number: the prefix 'A' + the basic four-digit part number + a suffix to indicate operating temperature range + a suffix to indicate package style, e.g., **A3240ELH** .

Allegro MicroSystems, Inc.

FUNCTIONAL BLOCK DIAGRAM

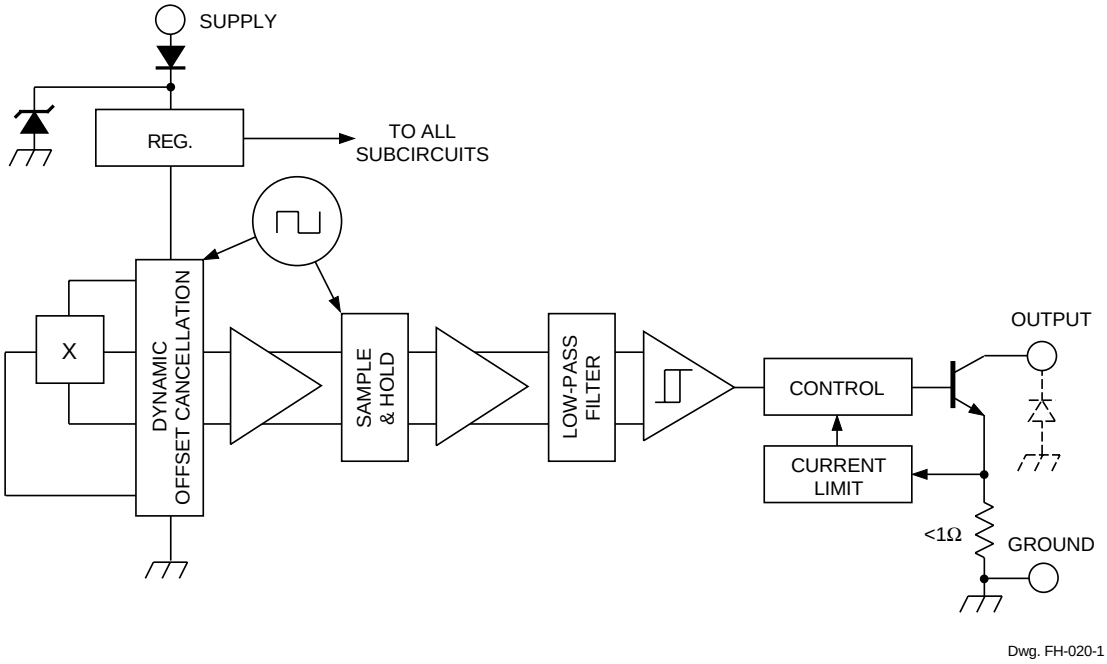

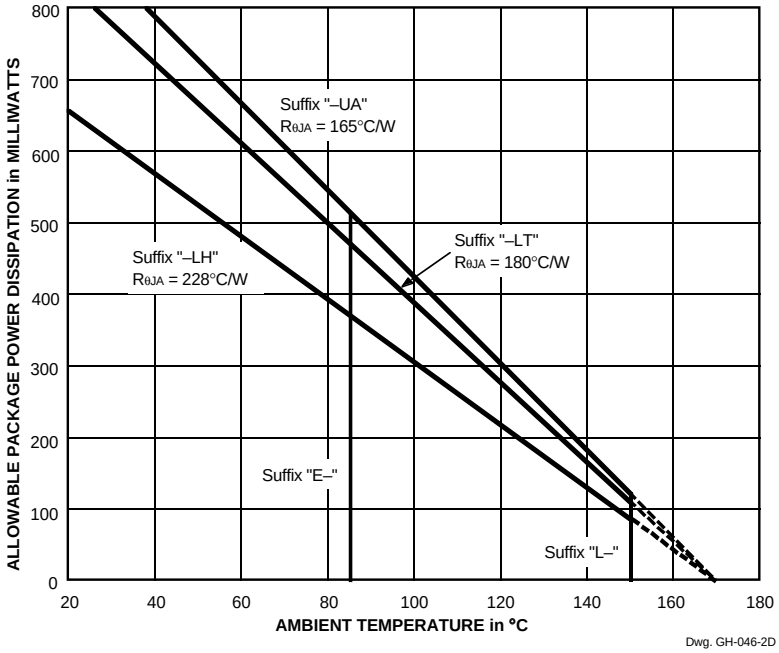

Suffix '–LH' Pinning
(SOT23W)

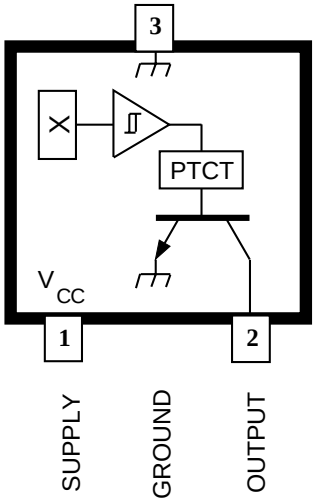

Dwg. PH-003-4

115 Northeast Cutoff, Box 15036
Worcester, Massachusetts 01615-0036 (508) 853-5000
Copyright © 2000, 2003, 2004 Allegro MicroSystems, Inc.

ELECTRICAL CHARACTERISTICS over operating temperature range.

Characteristic	Symbol	Test Conditions	Limits			
			Min.	Typ.	Max.	Units
Supply Voltage Range	V_{CC}	Operating, T_J < 165°C[1]	4.2	–	24	V
Output Leakage Current	I_{OFF}	V_{OUT} = 24 V, B < B_{RP}	–	–	10	µA
Output Saturation Voltage	$V_{OUT(SAT)}$	I_{OUT} = 20 mA, B > B_{OP}	–	185	500	mV
Output Current Limit	I_{OM}	B > B_{OP}	30	–	60	mA
Power-On Time	t_{po}	V_{CC} > 4.2 V	–	–	50	µs
Chopping Frequency	f_C		–	340	–	kHz
Output Rise Time	t_r	R_L = 820 Ω, C_L = 20 pF	–	0.2	2.0	µs
Output Fall Time	t_f	R_L = 820 Ω, C_L = 20 pF	–	0.1	2.0	µs
Supply Current	I_{CC}	B < B_{RP}, V_{CC} = 12 V	–	3.0	6.0	mA
		B > B_{OP}, V_{CC} = 12 V	–	4.0	6.0	mA
Reverse Battery Current	I_{CC}	V_{RCC} = -30 V	–	–	-5.0	mA
Zener Voltage	$V_Z + V_D$	I_{CC} = 15 mA, T_A = 25°C	28	32	37	V
Zener Impedance	$z_z + z_D$	I_{CC} = 15 mA, T_A = 25°C	–	50	–	Ω

NOTES: 1. Maximum voltage must be adjusted for power dissipation and junction temperature.
2. B_{OP} = operate point (output turns on); B_{RP} = release point (output turns off).
3. Typical Data is at T_A = +25°C and V_{CC} = 12 V and is for design information only.

MAGNETIC CHARACTERISTICS over operating supply voltage and temperature ranges.

Characteristic	Symbol	Test Conditions	Limits			
			Min.	Typ.	Max.	Units
Operate Point	B_{OP}		–	35	50	G
Release Point	B_{RP}		5.0	25	–	G
Hysteresis	B_{hys}	B_{OP} - B_{RP}	–	10	–	G

NOTES: 1. Typical Data is at T_A = +25°C and V_{CC} = 12 V and is for design information only.
2. 1 gauss (G) is exactly equal to 0.1 millitesla (mT).

TYPICAL OPERATING CHARACTERISTICS
as a function of temperature

SWITCH POINTS

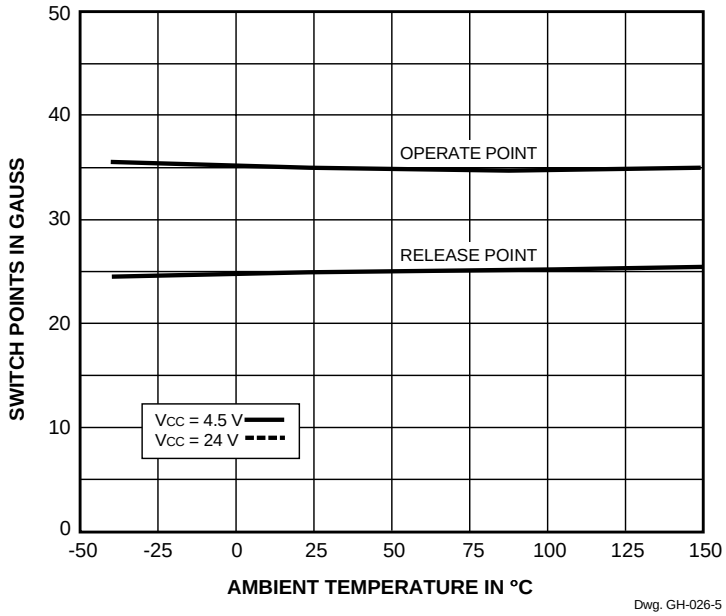

Dwg. GH-026-5

OUTPUT SATURATION VOLTAGE

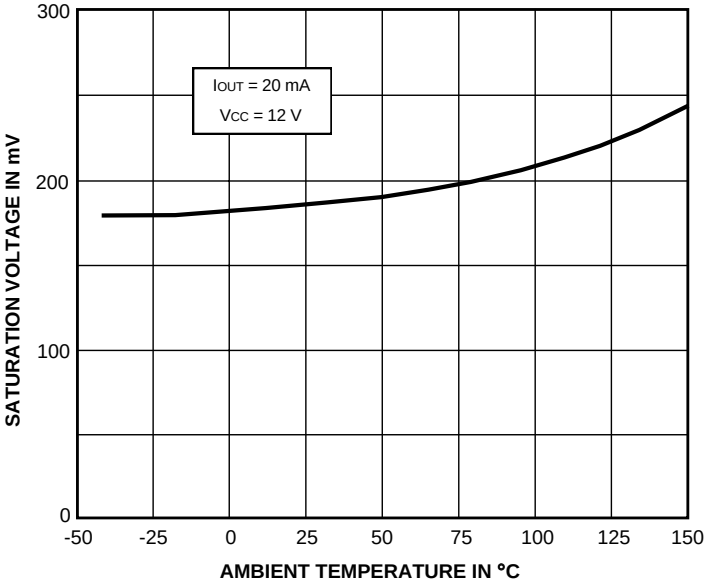

Dwg. GH-029-4

SUPPLY CURRENT

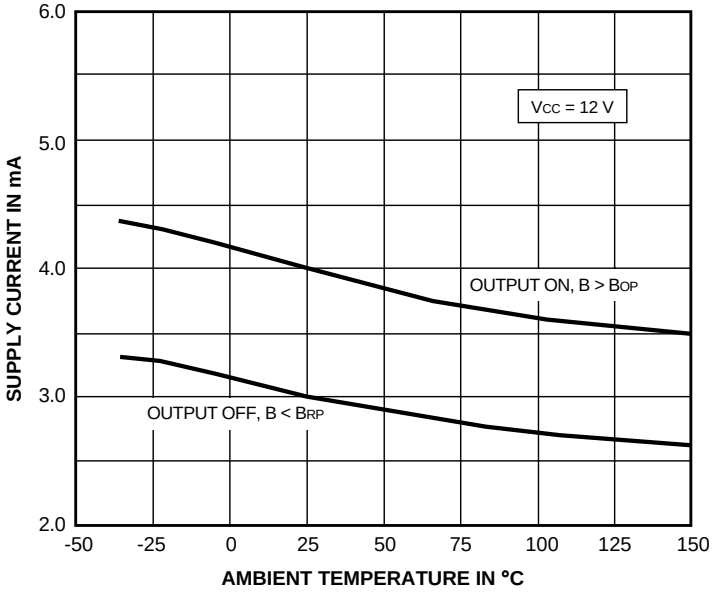

Dwg. GH-028-5

Allegro MicroSystems, Inc.
115 Northeast Cutoff, Box 15036
Worcester, Massachusetts 01615-0036 (508) 853-5000

TYPICAL OPERATING CHARACTERISTICS
as a function of supply voltage

SWITCH POINTS

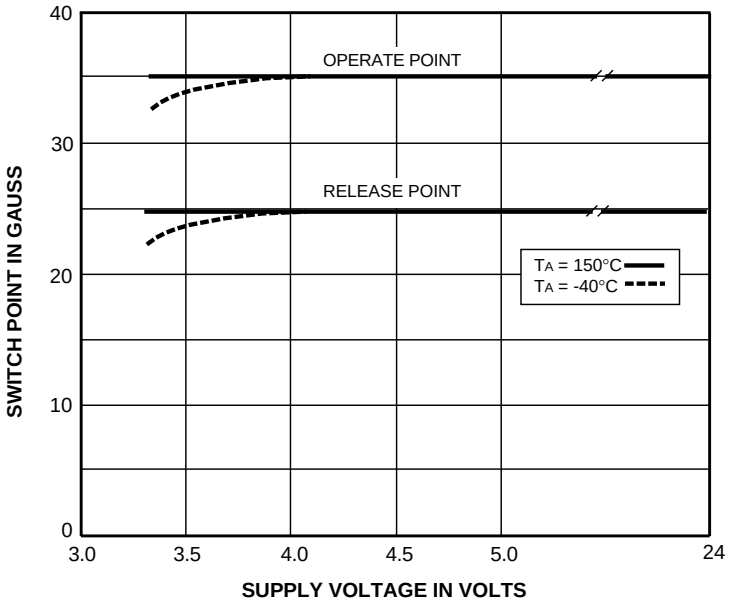

Dwg. GH-021-2

OUTPUT SATURATION VOLTAGE

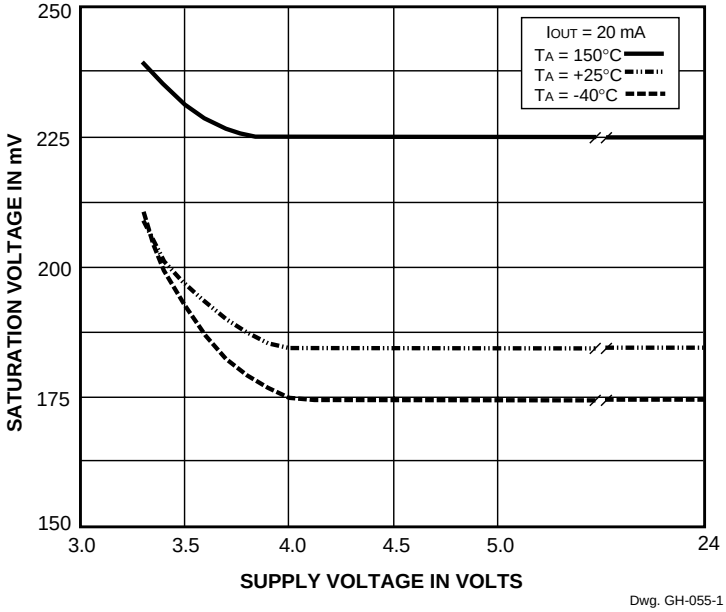

Dwg. GH-055-1

SUPPLY CURRENT

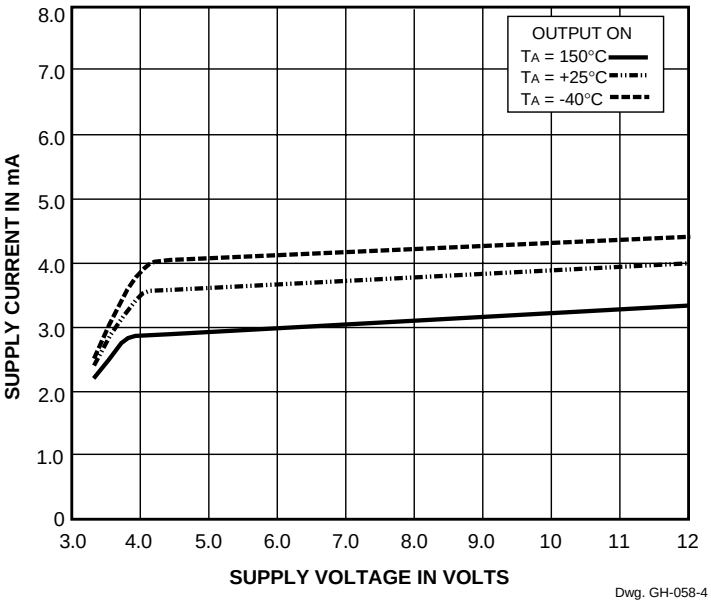

Dwg. GH-058-4

SENSOR LOCATIONS

Package Designator 'LH'

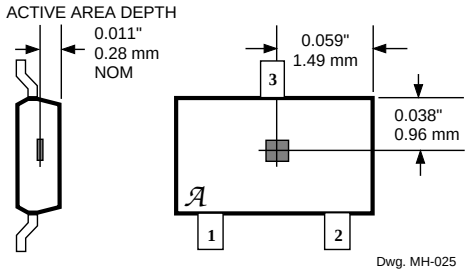

Dwg. MH-025

Package Designator 'LT'

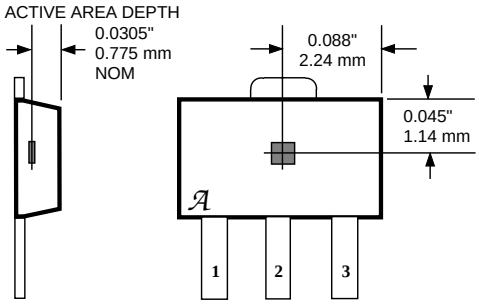

Dwg. MH-008-8A

Package Designator 'UA'

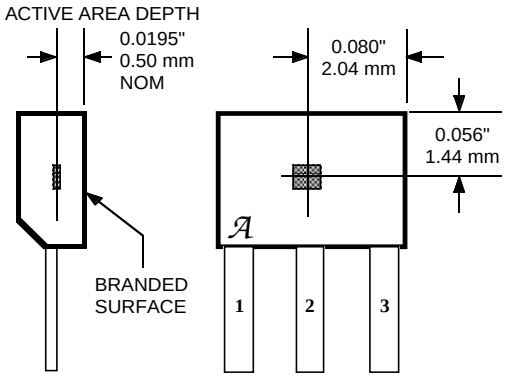

Dwg. MH-011-9B

The products described herein are manufactured under one or more of the following U.S. patents: 5,045,920; 5,264,783; 5,442,283; 5,389,889; 5,581,179; 5,517,112; 5,619,137; 5,621,319; 5,650,719; 5,686,894; 5,694,038; 5,729,130; 5,917,320; and other patents pending.

Allegro MicroSystems, Inc. reserves the right to make, from time to time, such departures from the detail specifications as may be required to permit improvements in the performance, reliability, or manufacturability of its products. Before placing an order, the user is cautioned to verify that the information being relied upon is current.

Allegro products are not authorized for use as critical components in life-support appliances, devices, or systems without express written approval.

The information included herein is believed to be accurate and reliable. However, Allegro MicroSystems, Inc. assumes no responsibility for its use; nor for any infringements of patents or other rights of third parties that may result from its use.

Allegro MicroSystems, Inc.
115 Northeast Cutoff, Box 15036
Worcester, Massachusetts 01615-0036 (508) 853-5000

FUNCTIONAL DESCRIPTION

Chopper-Stabilized Technique. The Hall element can be considered as a resistor array similar to a Wheatstone bridge. A large portion of the offset is a result of the mismatching of these resistors. These devices use a proprietary dynamic offset cancellation technique, with an internal high-frequency clock to reduce the residual offset voltage of the Hall element that is normally caused by device overmolding, temperature dependencies, and thermal stress. The chopper-stabilizing technique cancels the mismatching of the resistor circuit by changing the direction of the current flowing through the Hall plate using CMOS switches and Hall voltage measurement taps, while maintaing the Hall-voltage signal that is induced by the external magnetic flux. The signal is then captured by a sample-and-hold circuit and further processed using low-offset bipolar circuitry. This technique produces devices that have an extremely stable quiescent Hall output voltage, are immune to thermal stress, and have precise recoverability after temperature cycling. This technique will also slightly degrade the device output repeatability. A relatively high sampling frequency is used in order that faster signals can be processed.

More detailed descriptions of the circuit operation can be found in: Technical Paper STP 97-10, *Monolithic Magnetic Hall Sensor Using Dynamic Quadrature Offset Cancellation* and Technical Paper STP 99-1, *Chopper-Stabilized Amplifiers With A Track-and-Hold Signal Demodulator*.

Operation. The output of these devices switches low (turns on) when a magnetic field (south pole) perpendicular to the Hall sensor exceeds the operate point threshold (B_{OP}). After turn-on, the output is capable of sinking 25 mA and the output voltage is $V_{OUT(SAT)}$. When the magnetic field is reduced below the release point (B_{RP}), the device output goes high (turns off). The difference in the magnetic operate and release points is the hysteresis (B_{hys}) of the device. This built-in hysteresis allows clean switching of the output even in the presence of external mechanical vibration and electrical noise.

Applications. It is strongly recommended that an external bypass capacitor be connected (in close proximity to the Hall sensor) between the supply and ground of the device to reduce both external noise and noise generated by the chopper-stabilization technique.

The simplest form of magnet that will operate these devices is a ring magnet. Other methods of operation, such as linear magnets, are possible. Extensive applications information on magnets and Hall-effect sensors is also available in *Application Note* 27701, or at

www.allegromicro.com

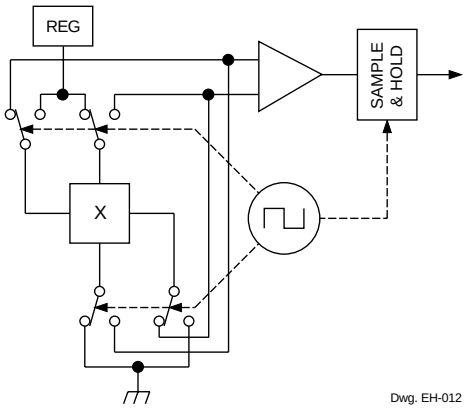

Dwg. EH-012

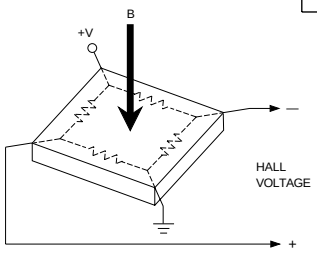

Dwg. AH-011-2

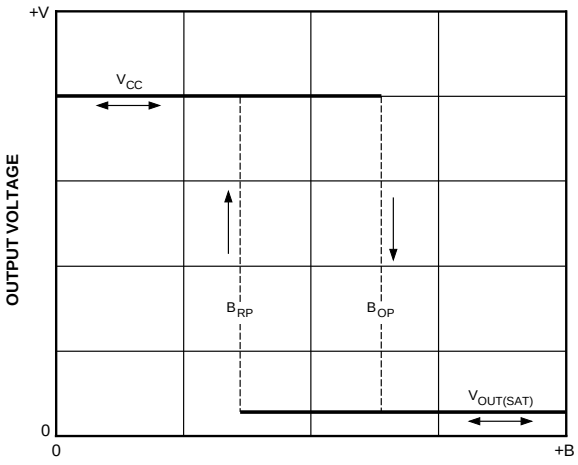

Dwg. GH-007-2

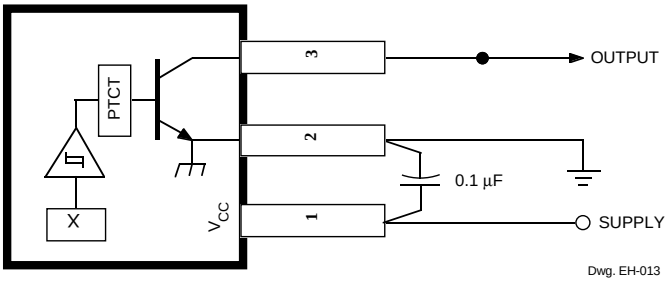

Dwg. EH-013

PACKAGE DESIGNATOR 'LH'

(fits SC-59A solder-pad layout)

Dimensions in Inches
(for reference only)

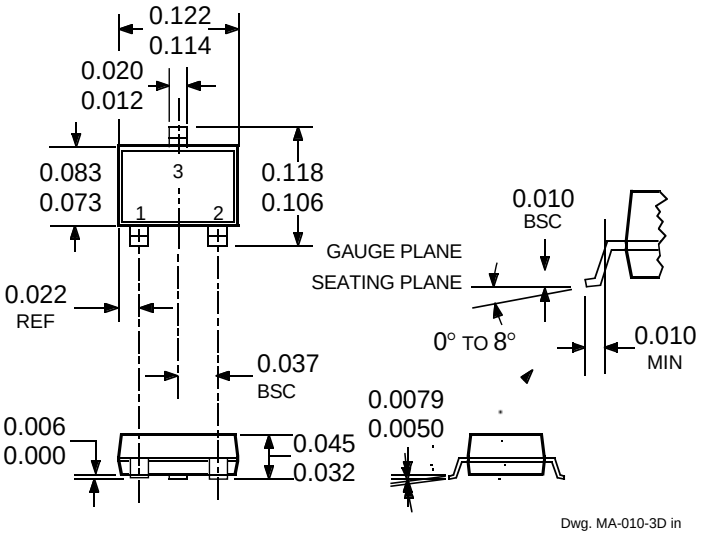

Dwg. MA-010-3D in

Dimensions in Millimeters
(controlling dimensions)

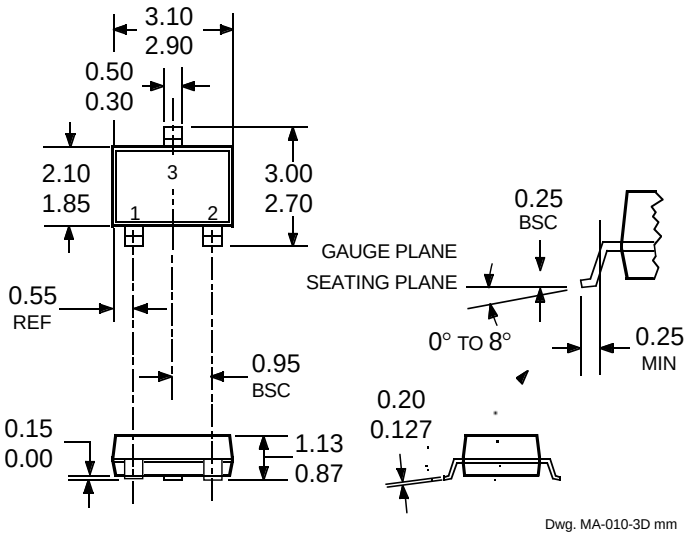

Dwg. MA-010-3D mm

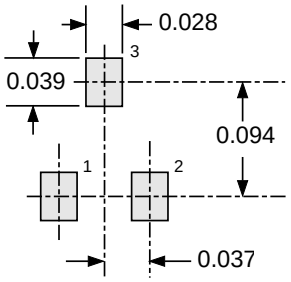

Dwg. MA-011-3 in

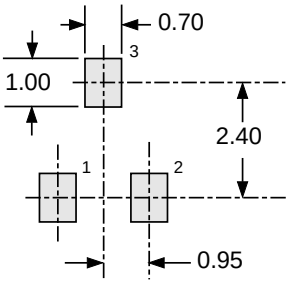

Dwg. MA-011-3 mm

NOTES:
1. Tolerances on package height and width represent allowable mold offsets. Dimensions given are measured at the widest point (parting line).
2. Exact body and lead configuration at vendor's option within limits shown.
3. Height does not include mold gate flash.
4. Where no tolerance is specified, dimension is nominal.
5. Add "LT" to part number for tape and reel.

Allegro MicroSystems, Inc.
115 Northeast Cutoff, Box 15036
Worcester, Massachusetts 01615-0036 (508) 853-5000

PACKAGE DESIGNATOR 'LT'
(SOT89/TO-243AA)

Dimensions in Inches
(for reference only)

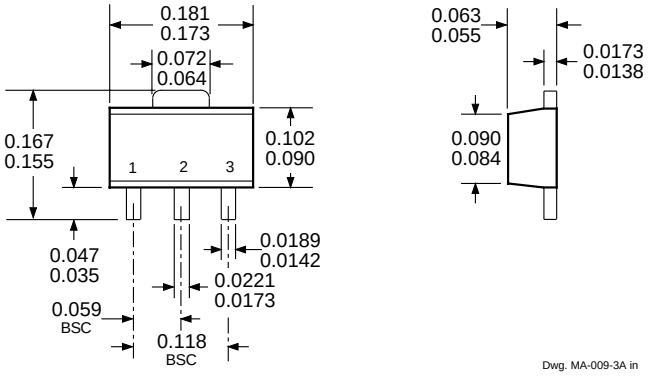

Dwg. MA-009-3A in

Dimensions in Millimeters
(controlling dimensions)

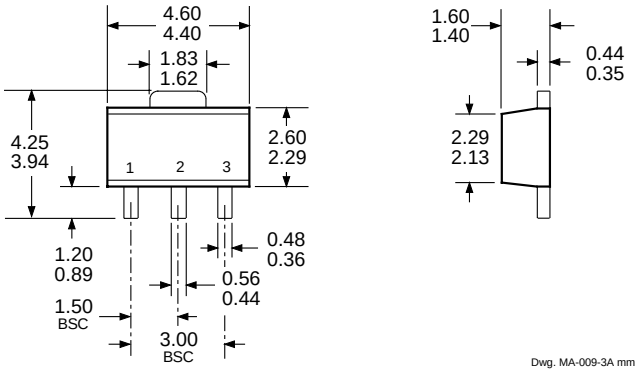

Dwg. MA-009-3A mm

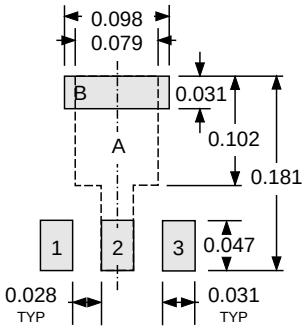

Pads 1, 2, 3, and A — Standard SOT89 Layout
Pads 1, 2, 3, and B — Low-Stress Version
Pads 1, 2, and 3 only — Lowest Stress, But Not Self Aligning

Dwg. MA-012-3 in

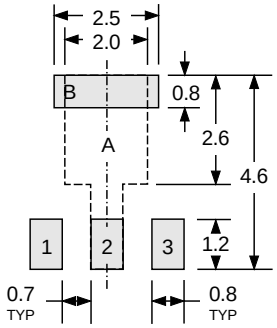

Pads 1, 2, 3, and A — Standard SOT89 Layout
Pads 1, 2, 3, and B — Low-Stress Version
Pads 1, 2, and 3 only — Lowest Stress, But Not Self Aligning

Dwg. MA-012-3 mm

NOTES: 1. Exact body and lead configuration at vendor's option within limits shown.
2. Supplied in bulk pack (500 pieces per bag) or add "TR" to part number for tape and reel.
3. Only low-temperature (≤240°C) reflow-soldering techniques are recommended for SOT89 devices.

PACKAGE DESIGNATOR 'UA'

Dimensions in Inches
(controlling dimensions)

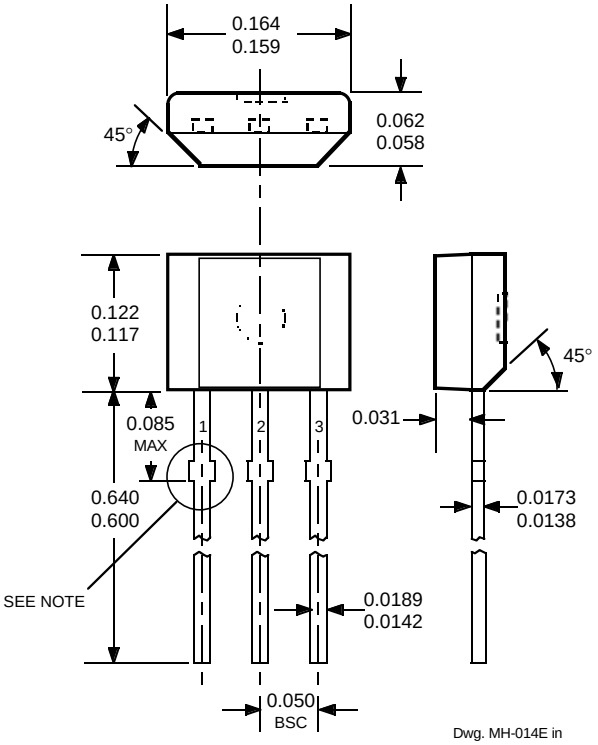

Dimensions in Millimeters
(for reference only)

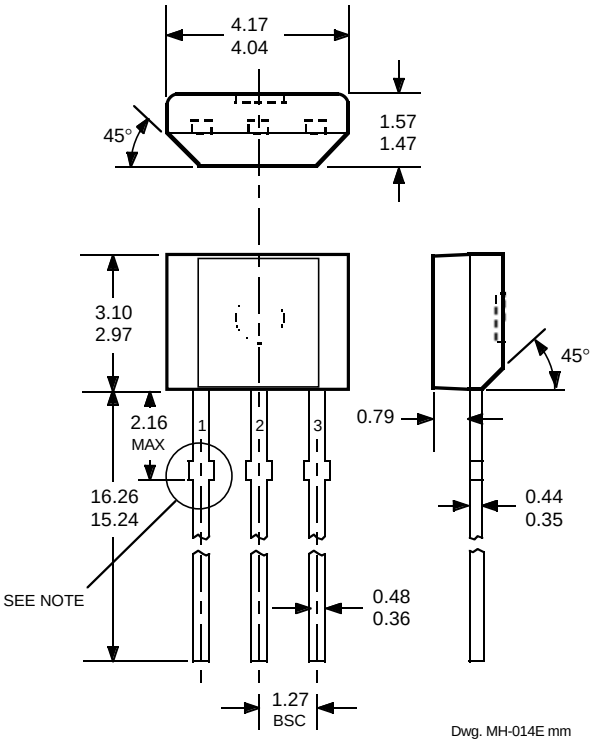

NOTES:
1. Tolerances on package height and width represent allowable mold offsets. Dimensions given are measured at the widest point (parting line).
2. Exact body and lead configuration at vendor's option within limits shown.
3. Height does not include mold gate flash.
4. Recommended minimum PWB hole diameter to clear transition area is 0.035" (0.89 mm).
5. Where no tolerance is specified, dimension is nominal.
6. Supplied in bulk pack (500 pieces per bag).

Radial Lead Form (order A3240xUA-LC)

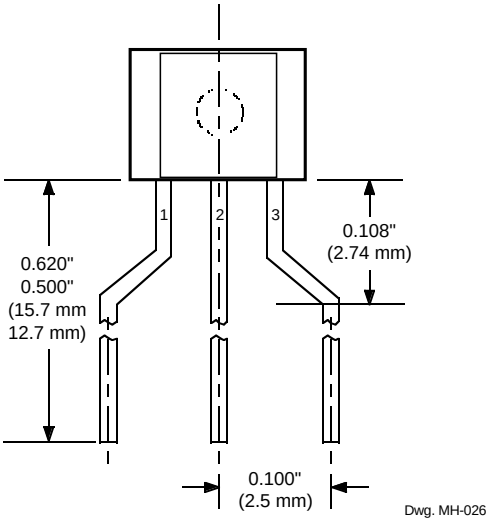

NOTE: Lead-form dimensions are the nominals produced on the forming equipment. No dimensional tolerance is implied or guaranteed for bulk packaging (500 pieces per bag).

Allegro MicroSystems, Inc.
115 Northeast Cutoff, Box 15036
Worcester, Massachusetts 01615-0036 (508) 853-5000