TPS61253A 3.8-MHz, 5-V / 4-A Boost Converter in 1.2-mm x 1.3-mm WCSP

1 Features

- Wide Input Voltage Range from 2.3 V to 5.5 V
- Fixed Output Voltage: 4.5 / 4.7 / 5.0 / 5.2 V
- Two FETs Integrated: 35-mΩ LS-FET, 60-mΩ HS-FET
- I_{OUT} ≥ 1500mA continuously at V_{OUT} = 5 V and V_{IN} ≥ 3 V
- 42-µA Quiescent Current from Input
- 4-A Switching Valley Current Limit
- 3.8-MHz Switching Frequency
- Selectable Auto PFM, Forced PWM and Ultrasonic Mode
- Support Pass-Through Mode
- ±2% Output Voltage Accuracy
- 600-µs Soft-Start Time
- Hiccup-Mode Short Protection
- Load Disconnection during Shutdown
- Thermal Shutdown
- Total Solution Size < 25 mm^2
- Create a Custom Design Using the TPS61253A With the WEBENCH® Power Designer

2 Applications

- Smart Phones
- Portable Speaker
- USB Charging Ports
- NFC PA Supply
- Li Battery to 5-V Power Conversion

3 Description

The TPS6125xA device provides a power supply solution for battery-powered portable applications. With the input voltage ranging from 2.3 V to 5.5 V, the device supports the applications powered by the Li-Ion batteries with the extended voltage range. Different fixed output voltage versions are available of 4.5 V, 4.7 V, 5 V and 5.2 V. The TPS6125xA supports up to 1500-mA load current from a battery discharged as low as 3 V.

The TPS6125xA operates at typical 3.8-MHz switching frequency. The TPS6125xA could be flexibly configured at the Auto PFM mode, forced PWM mode or ultrasonic mode. The Auto PFM mode could benefit with the high efficiency at the light load. The forced PWM operation can make the switching frequency be constant crossing the whole load range. The ultrasonic mode keeps the switching frequency always larger than 25 kHz at any load condition to avoid the acoustic noise.

TPS6125xA has a built-in 600-µs soft start to avoid the inrush current at startup. When the output is shorted, the device enters into the hiccup mode and recovers automatically after the short releases. During the shutdown, the load is completely disconnected from the input end with maximum 1.3-uA current being consumed.

The TPS6125xA comes in a 9-ball 1.2-mm x 1.3-mm WCSP package and offers a very small solution size with the minimum amount of external components.

Device Information(1)

PART NUMBER	PACKAGE	BODY SIZE (NOM)
TPS6125xA	DSBGA (9)	1.2 mm x 1.3 mm

(1) For all available packages, see the orderable addendum at the end of the data sheet.

Typical Schematic

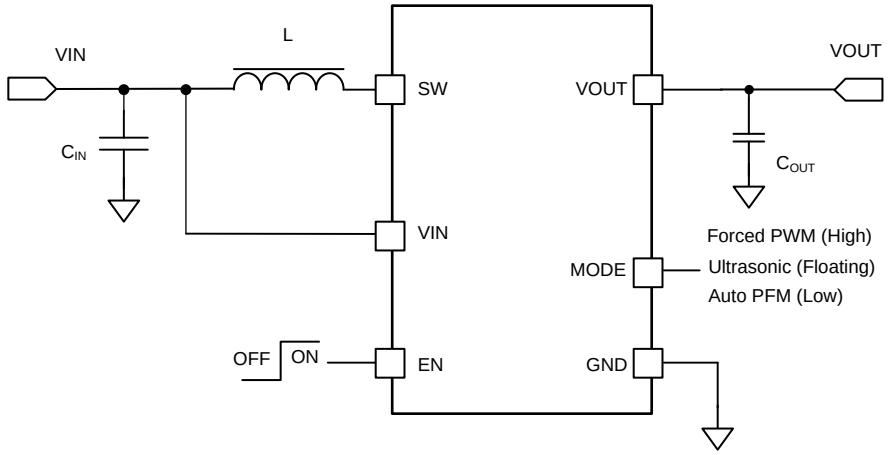

An IMPORTANT NOTICE at the end of this data sheet addresses availability, warranty, changes, use in safety-critical applications, intellectual property matters and other important disclaimers. PRODUCTION DATA.

Table of Contents

1 Features ... 1
2 Applications ... 1
3 Description ... 1
4 Revision History ... 2
5 Device Comparison Table ... 3
6 Pin Configuration and Functions ... 4
7 Specifications ... 4
7.1 Absolute Maximum Ratings ... 4
7.2 ESD Ratings ... 5
7.3 Recommended Operating Conditions ... 5
7.4 Thermal Information ... 5
7.5 Electrical Characteristics ... 5
7.6 Timing Requirements ... 6
7.7 Switching Characteristics ... 6
7.8 Typical Characteristics ... 7
8 Detailed Description ... 10
8.1 Overview ... 10
8.2 Functional Block Diagram ... 10
8.3 Feature Description ... 11
8.4 Device Functional Modes ... 13
9 Application and Implementation ... 15
9.1 Application Information ... 15
9.2 Typical Application ... 15
9.3 System Examples ... 20
10 Power Supply Recommendations ... 20
11 Layout ... 21
11.1 Layout Guidelines ... 21
11.2 Layout Example ... 21
11.3 Thermal Considerations ... 21
12 Device and Documentation Support ... 22
12.1 Device Support ... 22
12.2 Documentation Support ... 22
12.3 Community Resources ... 22
12.4 Trademarks ... 22
12.5 Electrostatic Discharge Caution ... 22
12.6 Glossary ... 23
13 Mechanical, Packaging, and Orderable Information ... 23

4 Revision History

DATE	REVISION	NOTES
March 2017	*	Initial release.

Copyright © 2017, Texas Instruments Incorporated

5 Device Comparison Table

PART NUMBER	OUTPUT VOLTAGE	SW VALLEY CURRENT LIMIT(typ.)	DC STARTUP CURRENT LIMIT (typ.)	SPECIFIC FEATURES
TPS61253A	5 V	4 A	1 .5 A	Supports output 5 V, up to 1500 mA
TPS61254A (1)	4.5 V	2.5 A	0.75 A	Supports output 4.5 V, up to 1000 mA
TPS61255A (1)	4.7 V	4 A	1.5 A	Supports output 4.5 V, up to 1500 mA
TPS612561A (1)	5 V	2.5 A	0.75 A	Supports output 5 V, up to 1000 mA
TPS61258A (1)	4.5 V	4 A	1.5 A	Supports output 4.5 V, up to 1500 mA
TPS612592A (1)	5.2 V	4 A	0.75 A	Supports output 5.1 V, up to 1500 mA
TPS612531A (1)	5 V	4 A	1.5 A	Supports output 5 V, up to 1500 mA with PFM/PWM mode only
TPS612532A (1)	5 V	4 A	0.75 A	Supports output 5 V, up to 1500 mA with output discharge function

(1) Product preview. Contact TI factory for more information.

6 Pin Configuration and Functions

YFF Package
9-Pin DSBGA
Top View

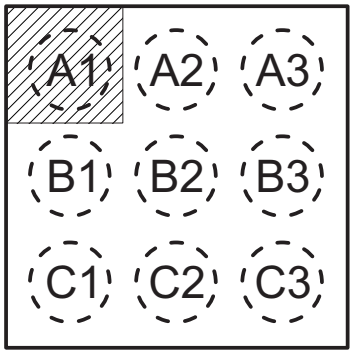

Pin Functions

PIN		I/O	DESCRIPTION
NAME	NO.		
EN	B3	I	This is the enable pin of the device. Connecting this pin to ground forces the device into shutdown mode. Pulling this pin high enables the device. There is an internal resistor pulled to GND.
GND	C1, C2	–	Ground pin.
MODE	C3	–	Operation mode selection pin. Mode = Low, the device works in the Auto PFM mode with good light load efficiency. Mode = High, the device is in the forced PWM mode, keep the switching frequency be constant crossing the whole load range. Mode = Floating, the device works in the ultrasonic mode; it keeps the switching frequency larger than 25 kHz to avoid the acoustic frequency toward no load condition.
SW	B1, B2	I/O	The switch pin of the converter. It is connected to the drain of the internal low-side power FET and the source of the internal high-side power FET
VIN	A3	I	Power supply input
VOUT	A1, A2	O	Boost converter output

7 Specifications

7.1 Absolute Maximum Ratings

over operating free-air temperature range (unless otherwise noted)[(1)]

		MIN	MAX	UNIT
Voltage range at terminals	Voltage at VIN, EN, MODE, VOUT	–0.3	6	V
	Voltage at SW	–0.3	7	V
Storage temperature, T_{stg}		-65	150	°C

(1) Stresses beyond those listed under *Absolute Maximum Ratings* may cause permanent damage to the device. These are stress ratings only, which do not imply functional operation of the device at these or any other conditions beyond those indicated under *Recommended Operating Conditions*. Exposure to absolute-maximum-rated conditions for extended periods may affect device reliability.

Copyright © 2017, Texas Instruments Incorporated

7.2 ESD Ratings

			VALUE	UNIT
$V_{(ESD)}$	Electrostatic discharge	Human-body model (HBM), per ANSI/ESDA/JEDEC JS-001 (1)	±2000	V
		Charged-device model (CDM), per JEDEC specification JESD22-C101 (2)	±500	

(1) JEDEC document JEP155 states that 500-V HBM allows safe manufacturing with a standard ESD control process. Manufacturing with less than 500-V HBM is possible with the necessary precautions.
(2) JEDEC document JEP157 states that 250-V CDM allows safe manufacturing with a standard ESD control process. Manufacturing with less than 250-V CDM is possible with the necessary precautions.

7.3 Recommended Operating Conditions

Over operating free-air temperature range unless otherwise noted.

		MIN	NOM	MAX	UNIT
V_{IN}	Input voltage	2.3		5.5	V
L	Effective inductance	0.33		1.3	µH
C_{OUT}	Effective output capacitance	3.5	5	30	µF
T_J	Operating junction temperature	–40		125	ºC

7.4 Thermal Information

THERMAL METRIC (1)		TPS6125XA YFF (DSBGA) 9 PINS	UNIT
$R_{\theta JA}$	Junction-to-ambient thermal resistance	108.3	°C/W
$R_{\theta JC(top)}$	Junction-to-case (top) thermal resistance	1.2	°C/W
$R_{\theta JB}$	Junction-to-board thermal resistance	28.8	°C/W
ψ_{JT}	Junction-to-top characterization parameter	0.6	°C/W
ψ_{JB}	Junction-to-board characterization parameter	28.9	°C/W

(1) For more information about traditional and new thermal metrics, see the *Semiconductor and IC Package Thermal Metrics* application report, SPRA953.

7.5 Electrical Characteristics

V_{IN} = 2.3 V to 4.85 V , V_{OUT} = 5 V , T_J = –40 °C to 125 °C ; Typical values are at V_{IN} = 3.6 V , T_J = 25 °C, unless otherwise noted.

PARAMETER		TEST CONDITIONS	MIN	TYP	MAX	UNIT
SUPPLY CURRENT						
V_{IN_UVLO}	Input voltage under voltage lockout (UVLO) threshold	V_{IN} rising		2.2	2.3	V
		V_{IN} falling		2.1	2.2	V
I_Q	Quiescent current into VIN pin	V_{IN} = 3.6 V, V_{OUT} = 5 V , EN = V_{IN} Device not switching		42	50	µA
	Quiescent current into VOUT pin	V_{IN} = 3.6 V, V_{OUT} = 5 V , EN = V_{IN} Device not switching		6.6	12	µA
I_{SD}	Shutdown current	EN = GND , V_{IN} = 2.3 V to 5.5 V, –40 °C ≤ T_J ≤ 85°C		0.05	1.3	µA
OUTPUT VOLTAGE						
V_{OUT}	PWM Operation	2.3 V ≤ V_{IN} ≤ 4.85V, I_{OUT} = 0mA, PWM operation. Open Loop	4.9	5	5.1	V
	PFM Operation	Auto PFM Mode		100.8		%V_{OUT}
	Ultrasonic Operation	Ultrasonic Mode		101.6		%V_{OUT}
R_{DIS}	output discharge resistor	V_{OUT} = 5 V, TPS612531A		350		Ω
POWER SWITCHES						
R_{DSON}	Low-side FET on resistance			35	55	mΩ
	High-side FET on resistance			60	80	mΩ

Electrical Characteristics (continued)

V_{IN} = 2.3 V to 4.85 V , V_{OUT} = 5 V , T_J = –40 °C to 125 °C ; Typical values are at V_{IN} = 3.6 V , T_J = 25 °C, unless otherwise noted.

PARAMETER		TEST CONDITIONS	MIN	TYP	MAX	UNIT
CURRENT LIMIT						
I_{LIM_SW}	Switching valley current limit at Auto PFM / Ultrasonic Mode	TPS61253A	3.4	4	4.6	A
	Switching valley current limit at Forced PWM Mode	TPS61253A	3.35	3.95	4.55	A
I_{LIM_DC}	DC startup current limit	TPS61253A	1	1.5		A
EN AND MODE LOGIC						
V_{EN_H}	EN logic high threshold				1.2	V
V_{EN_L}	EN logic low threshold		0.4			V
R_{EN}	EN pull-down resistor			930		kΩ
V_{MODE_H}	Mode logic high threshold				1.2	V
V_{MODE_L}	Mode logic low threshold		0.4			V
V_{MODE_F}	Mode pin floating voltage		0.75	0.8	0.85	V
I_{MODE_UP}	Pull up current			1		µA
I_{MODE_DOWN}	Pull down current			1		µA
PROTECTION						
T_{SD_R}	Thermal shutdown rising threshold			150		ºC
T_{SD_HYS}	Thermal protection hysteresis			20		ºC

7.6 Timing Requirements

V_{IN} = 2.3 V to 4.85 V , V_{OUT} = 5 V , T_J = –40 °C to 125 °C ; Typical values are at V_{IN} = 3.6 V , T_J = 25 °C, unless otherwise noted.

			MIN	NOM	MAX	UNIT
HICCUP OFF TIME						
t_{HCP_ON}	Hiccup on time	V_{IN} = 3.6 V, V_{OUT} = 5 V		1000		µs
t_{HCP_OFF}	Waiting time for the restart	V_{IN} = 3.6 V, V_{OUT} = 5 V		20		ms
START UP TIME						
t_{EN_DELAY}	Startup delay time	Time from EN high to start switching, No load		70		µs
t_{SS}	Soft start time	Time from EN high to V_{OUT}, No load		600		µs

7.7 Switching Characteristics

V_{IN} = 2.3 V to 4.85 V , V_{OUT} = 5 V , T_J = –40 °C to 125 °C ; Typical values are at V_{IN} = 3.6 V , T_J = 25 °C, unless otherwise noted.

PARAMETER		TEST CONDITIONS	MIN	TYP	MAX	UNIT
f_{SW}	Switching frequency, PWM mode	V_{IN} = 3.6 V, V_{OUT} = 5 V		3800		kHz
	Switching frequency, Ultrasonic mode	V_{IN} = 3.6 V, V_{OUT} = 5 V	25			kHz

Copyright © 2017, Texas Instruments Incorporated

7.8 Typical Characteristics

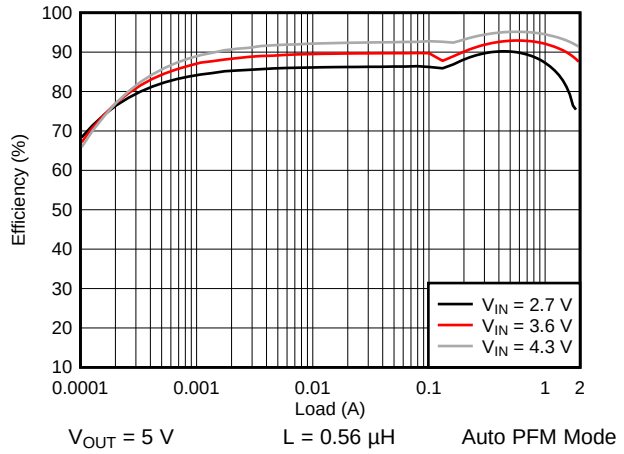

Figure 1. Efficiency vs Load

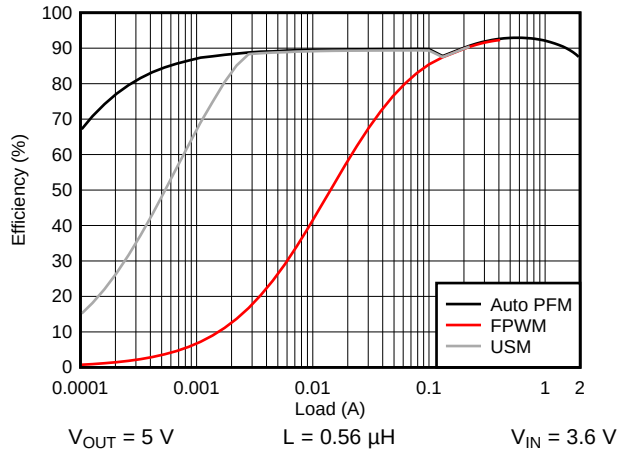

Figure 2. Efficiency vs Load

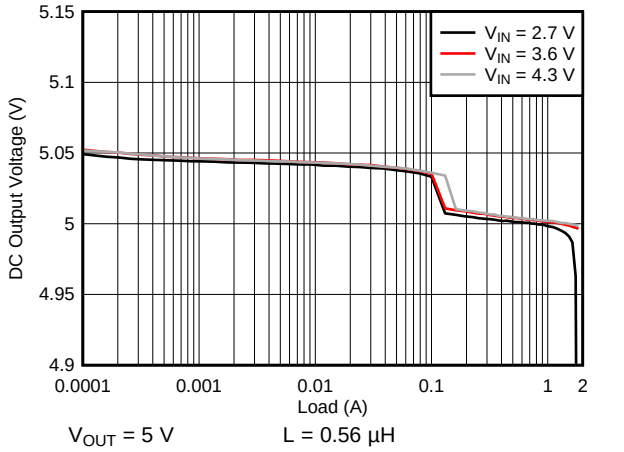

Figure 3. DC Output Voltage vs Load

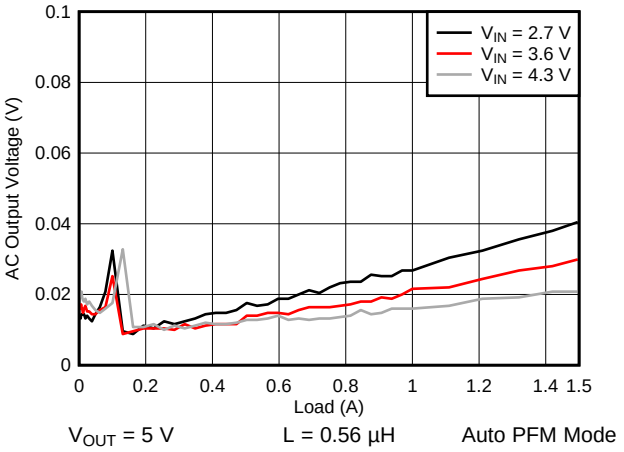

Figure 4. AC Output Voltage vs Load

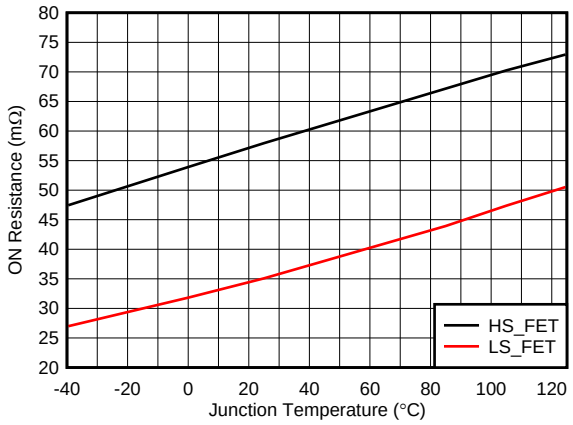

Figure 5. $RDS_{(ON)}$ vs Temperature

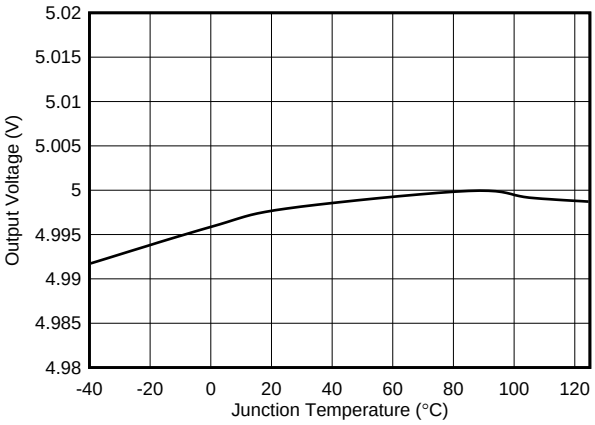

Figure 6. V_{OUT} vs Temperature

Typical Characteristics (continued)

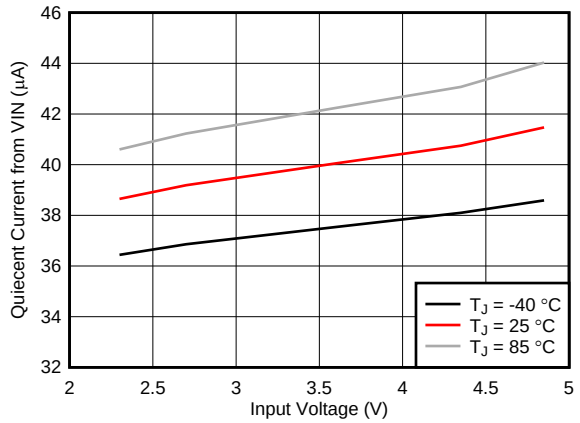

Figure 7. Quiescent Current (from VIN) vs Input Voltage

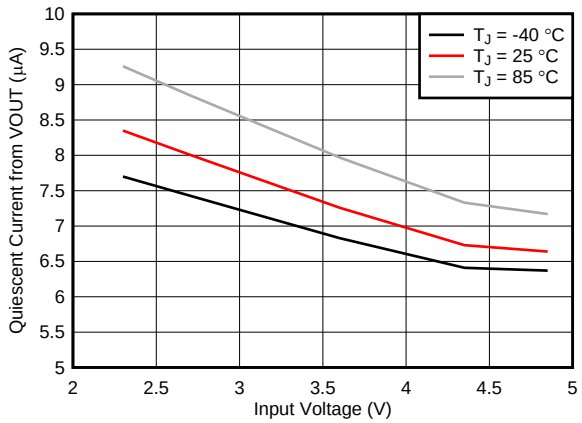

Figure 8. Quiescent Current (from VOUT) vs Input Voltage

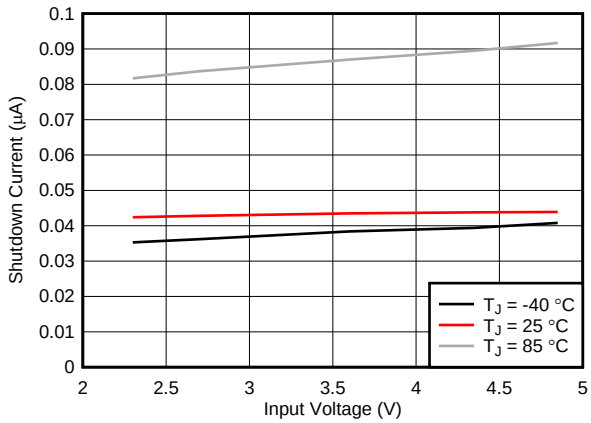

Figure 9. Shutdown Current vs Input Voltage

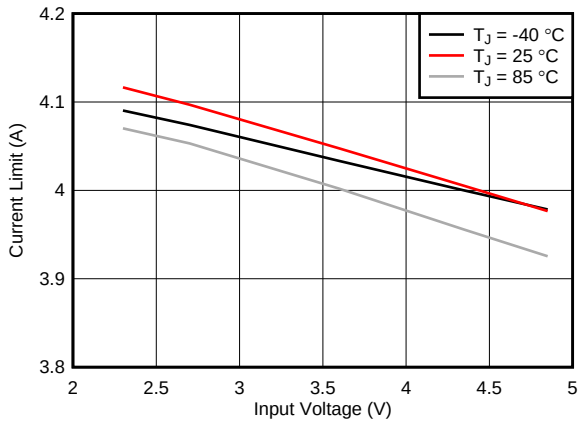

Figure 10. Current Limit (Auto PFM) vs Input Voltage

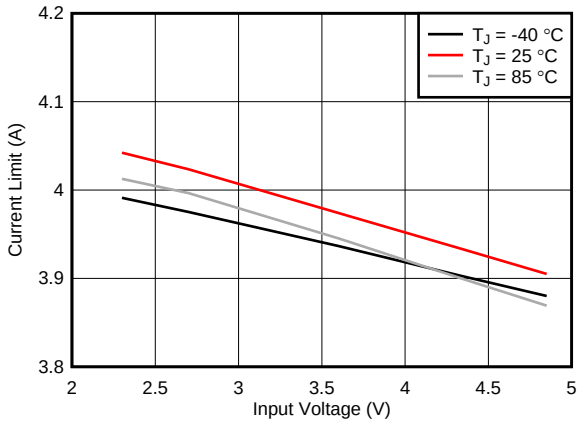

Figure 11. Current Limit (Forced PWM) vs Input Voltage

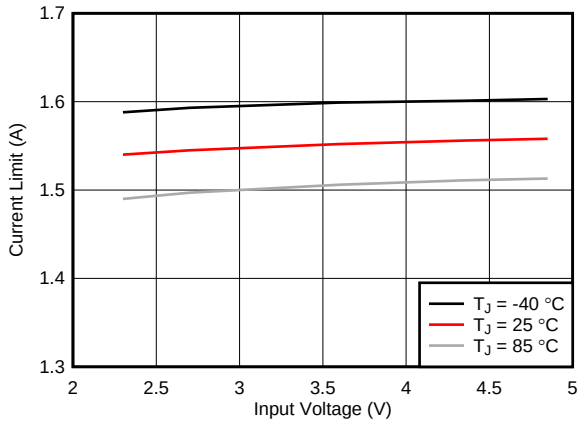

Figure 12. DC Startup Current Limit vs Input Voltage

Copyright © 2017, Texas Instruments Incorporated

Typical Characteristics (continued)

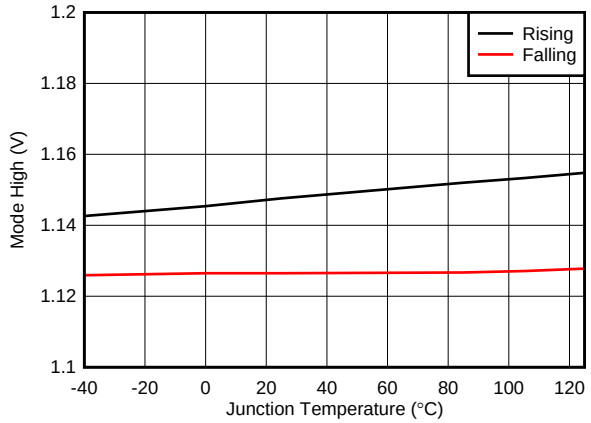

Figure 13. Mode High Rising / Falling vs Temperature

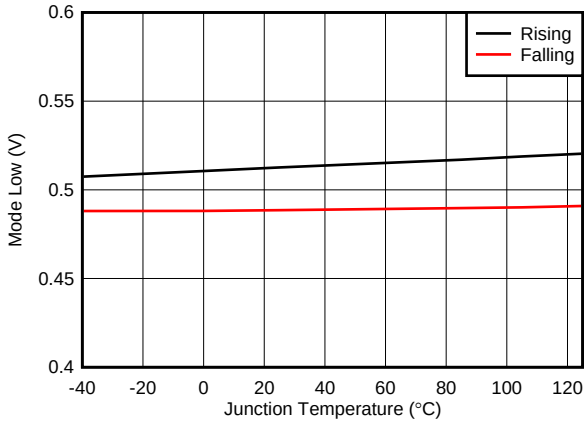

Figure 14. Mode Low Rising / Falling vs Temperature

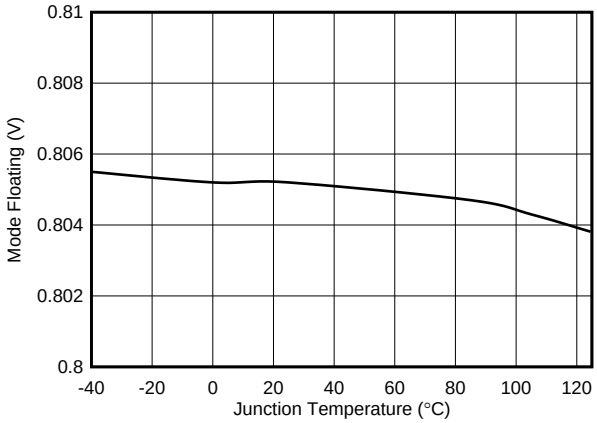

Figure 15. Mode Floating vs Temperature

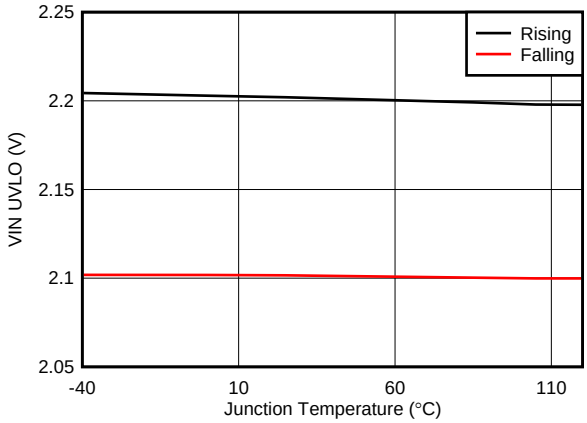

Figure 16. VIN UVLO vs Temperature

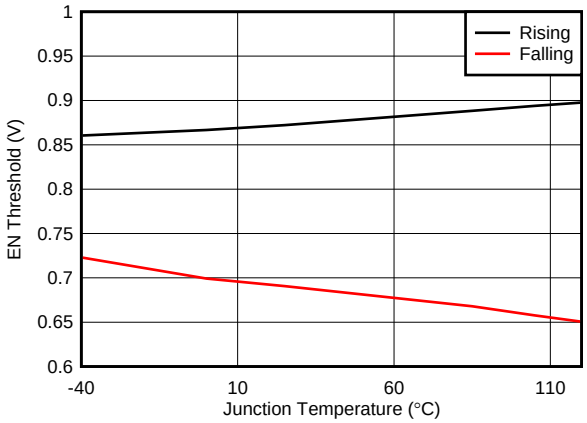

Figure 17. EN Threshold vs Temperature

8 Detailed Description

8.1 Overview

The TPS6125xA synchronous step-up converter typically operates at a quasi-constant 3.8-MHz frequency pulse width modulation (PWM) from the moderate to heavy load currents. During the PWM operation, the converter uses a quasi-constant on-time valley current mode control scheme to achieve the excellent line / load regulation and allows the use of a small inductor and ceramic capacitors. Based on the V_{IN} / V_{OUT} ratio, a simple circuit predicts the required on-time. At the beginning of the switching cycle, the low-side N-MOS switch is turned on and the inductor current ramps up to a peak current that is defined by the on-time and the inductance. In the second phase, once the on-timer has expired, the rectifier FET is turned on and the inductor current decays to a preset valley current threshold. Then, the switching cycle repeats by setting the on timer again and activating the low-side N-MOS switch.

At the light load current conditions, the TPS6125xA could be flexibly configured at the Auto PFM mode, the forced PWM or the ultrasonic mode. At the Auto PFM mode, the TPS6125xA converter operates in Power Save Mode with pulse frequency modulation (PFM) and improves the efficiency. For the forced PWM mode, the switching frequency is the same at the light load as that of heavy load. The ultrasonic mode is a unique control feature that keeps the switching frequency above 25 kHz to avoid the acoustic audible frequencies toward virtually no load condition.

In general, a dc/dc step-up converter can only operate in "true" boost mode, i.e. the output “boosted” by a certain amount above the input voltage. The TPS6125xA device operates differently as it can smoothly transition in and out of pass-through operation (V_{IN} exceeds the preset out of Boost). Therefore the output can be kept as close as possible to its regulation limits even though the converter is subject to an input voltage that tends to be excessive.

Internal soft-start and loop compensation simplify the design process while minimizing the number of external components

8.2 Functional Block Diagram

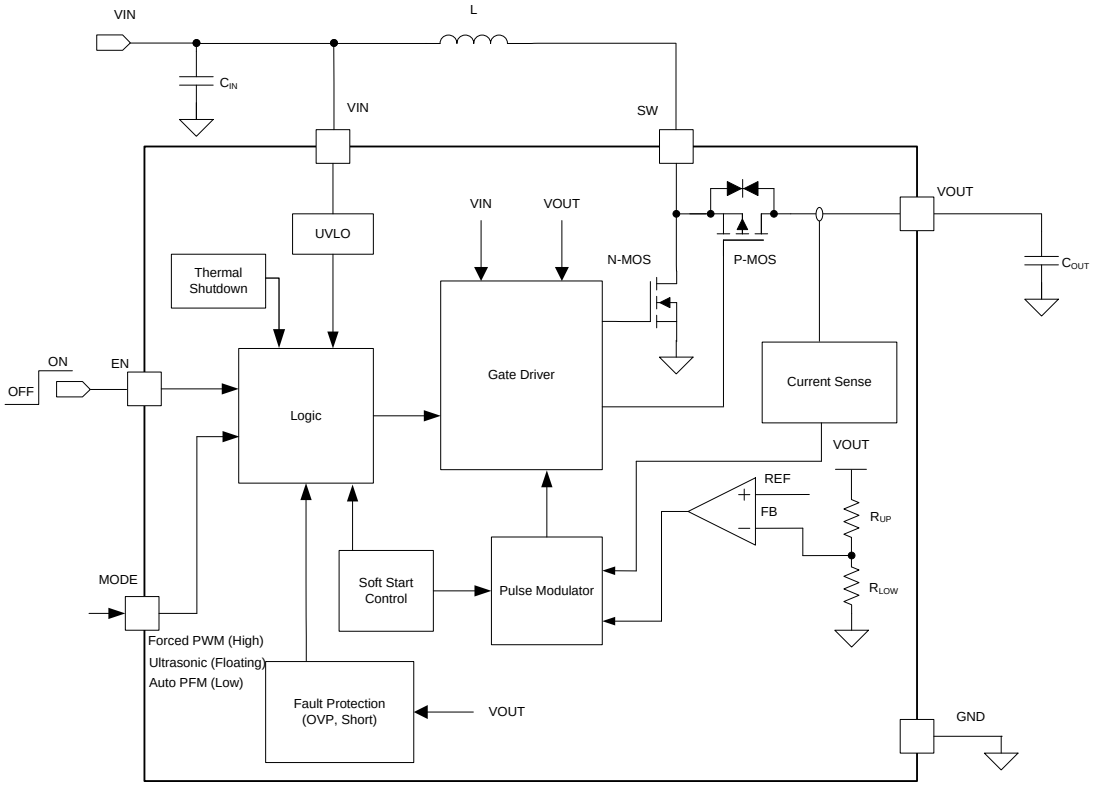

Copyright © 2017, Texas Instruments Incorporated

Copyright © 2017, Texas Instruments Incorporated

8.3 Feature Description

8.3.1 Startup

The TPS6125xA integrates an internal circuit that controls the ramp up of the output voltage during start-up and prevents the converter from the large inrush current. When the device is enabled, the high-side rectifying switch turns on to charge the output capacitor linearly which is called the pre-charge phase. During the pre-charge phase, the output current is limited to the pre-charge current limit I_{LIM_DC}. The pre-charge phase terminates until the output voltage getting close to the input voltage.

Once the output capacitor has been biased close to the input voltage, the device starts switching which is called the soft start phase. During the soft start phase, there is a soft start voltage controlling the FB pin voltage, and the output voltage rising slope follows the soft start voltage slope. The device finishes the soft start phase and operates normally when the nominal output voltage is reached.

Table 1. Start-up Mode Description

MODE	DESCRIPTION	CONDITION
Pre-charge	V_{OUT} linearly starts up without switching	$V_{OUT} < V_{IN}$ - 300 mV
Boost Soft Start	V_{OUT} starts up with switching phase	$V_{OUT_BOOST} \geq V_{OUT} \geq V_{IN}$ - 300 mV

8.3.2 Enable and Disable

The device is enabled by setting EN pin to a voltage above 1.2 V and V_{IN} above UVLO threshold. At first, the internal reference is activated and the internal analog circuits are settled. Afterwards, the startup is activated and the output voltage ramps up. With the EN pin pulled to ground, the device enters into the shutdown mode. In the shutdown mode, the TPS6125xA stops switching and the internal control circuitry is turned off.

8.3.3 Under-Voltage Lockout (UVLO)

The under voltage lockout circuit prevents the device from malfunctioning at the low input voltage of the battery from the excessive discharge. The device starts operation once the rising V_{IN} trips the under-voltage lockout (UVLO) threshold and it disables the output stage of the converter once the V_{IN} is below UVLO falling threshold.

8.3.4 Current Limit Operation

During the startup phase, the output current is limited to the pre-charge current limit which is specified as the I_{LIM_DC} in the Electrical Characteristic Table.

The TPS6125xA employs a valley current sensing scheme at the normal boost switching phase. When the output load is increased, the cycle-by-cycle valley current limit will be triggered. As shown in Figure 18, the maximum continuous output current, prior to entering the current limit operation, can be defined by Equation 1:

$$I_{OUT_LIM} = (1-D) \times (I_{VALLEY_LIM} + \frac{1}{2}\Delta I_L) \quad (1)$$

$$D = 1 - \frac{V_{IN} \times \eta}{V_{OUT}} \quad (2)$$

$$\Delta I_L = \frac{V_{IN}}{L} \times \frac{D}{f} \quad (3)$$

Where

I_{OUT_LIM} is the output current limit, I_{VALLEY_LIM} is switching valley current limit

Δ_{IL} is the peak-peak inductor current ripple

D is the duty cycle, f is the switching frequency, η is the efficiency, L is the indcutor

V_{OUT} is the output voltage, V_{IN} is the input voltage

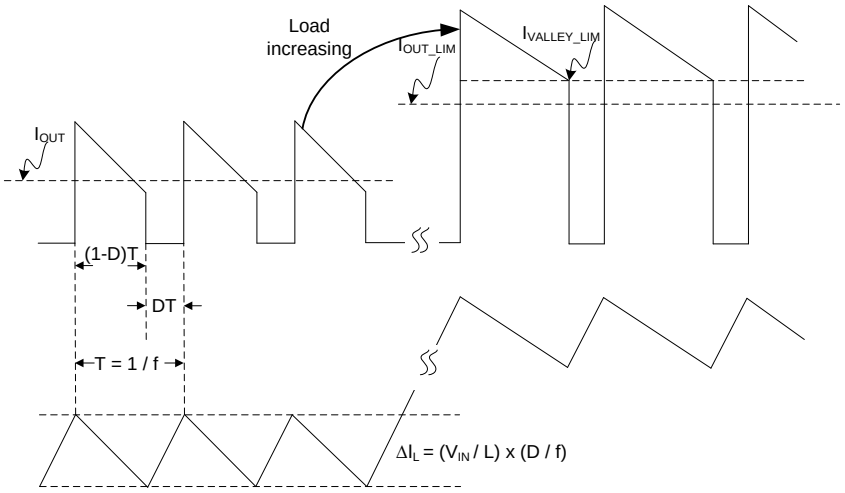

Figure 18. Current Limit Operation

If the output current is further increased and trigger the short protection threshold (typical 6A of inductor current), the TPS6125xA enters into the hiccup mode. Once the hiccup is triggered, the device turns on the high-side FET for around 1 ms with the pre-charge current limit and stops for around 20 ms. The hiccup on / off cycle repeats again and again if the short condition is present. Figure 19 illustrates the TPS6125xA's working scheme of the hiccup mode. The average current and thermal will be much lowered at the hiccup steady state and the device could recover automatically as long as the short releases.

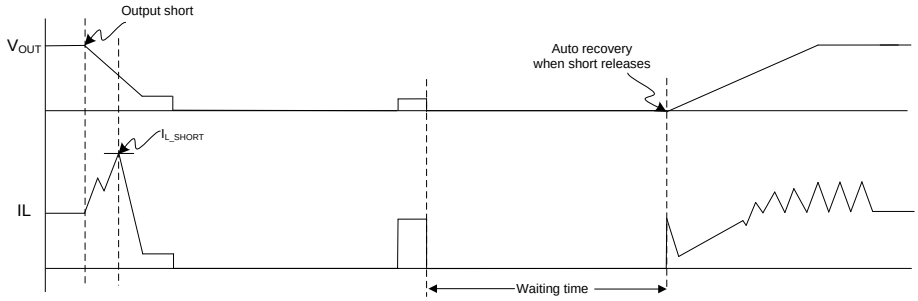

Figure 19. Hiccup Mode Short Protection

8.3.5 Load Disconnection

The advantage of TPS6125xA is that this converter disconnects the output from the input of the power supply when it is disabled. In case of a connected battery it prevents it from being discharged during shutdown of the converter.

8.3.6 Thermal Shutdown

The TPS6125xA has a built-in temperature sensor which monitors the internal junction temperature, T_J. If the junction temperature exceeds the threshold (typical 150 °C), the device goes into the thermal shutdown, and the high-side and low-side FETs are turned off. When the junction temperature falls below the thermal shutdown falling threshold (typical 130 °C), the device resumes the operation.

Copyright © 2017, Texas Instruments Incorporated

8.4 Device Functional Modes

8.4.1 Auto PFM Mode

The device integrates the Power Save Mode with pulse frequency modulation (Auto PFM) to improve the efficiency at the light load. At the light load operation, when the valley current of the inductor triggers the Auto PFM threshold, the device enters into the Auto PFM mode operation. During the Auto PFM operation, the output voltage is regulated at typically100.8% of voltage of the heavy load with the off time extended to lower the switching frequency. The Auto PFM operation exists when valley current exceeds the Auto PFM threshold. Figure 20 shows the output voltage behavior of Auto PFM operation.

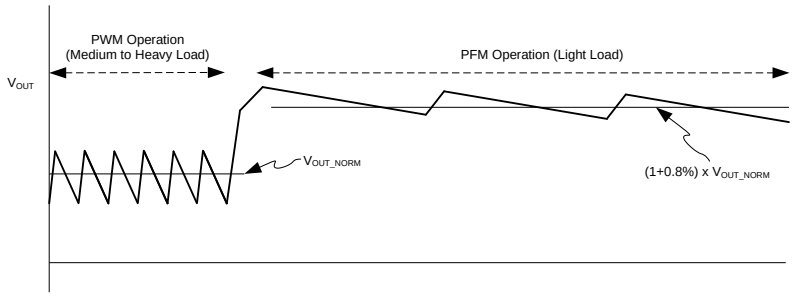

Figure 20. Output Voltage in Auto PFM / PWM Mode

8.4.2 Forced PWM Mode

In the forced PWM mode, the TPS6125xA keeps the switching frequency being constant for the whole load range. When the load current decreases, the output of the internal error amplifier decreases as well to lower the inductor peak current and delivers less power from input to output. The high-side FET is not turned off even if the current through the FET goes negative to keep the switching frequency being the same as that of the heavy load.

8.4.3 Ultrasonic Mode

The ultrasonic mode is an unique control feature that keeps the switching frequency above the acoustic audible frequency toward no load condition. The ultrasonic mode control circuit monitors the switching frequency and keeps the switching frequency above 25 kHz to avoid the acoustic band. The output voltage becomes typically 1.6% higher than PWM operation. Figure 21 illustrates the details of ultrasonic mode operation.

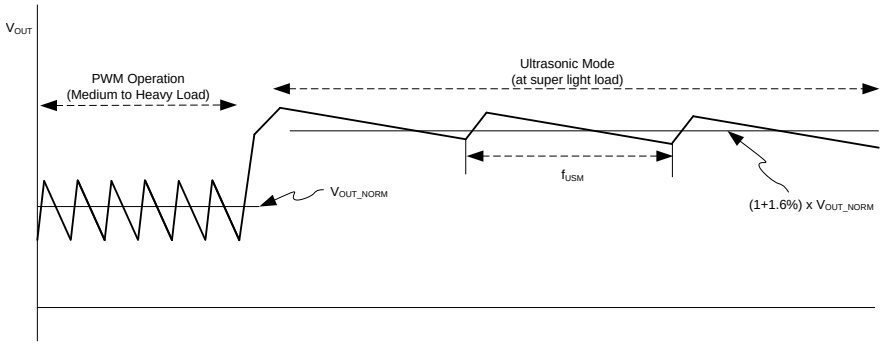

Figure 21. Ultrasonic Mode Operation

8.4.4 Mode Configuration

There is a mode pin to configure the TPS6125xA into different operation modes. Table 2 describes the conditions of each mode operation.

Table 2. Mode Selection Table

Mode Pin Logic	External Connection	Mode
Low	External pull low, the pin voltage < 0.4 V	Auto PFM Operation
High	External pull high, the pin voltage > 1.2 V	Forced PWM Operation
Floating	No external connection required, leave the pin floating	Ultrasonic Operation

8.4.5 Pass-Through Mode

When the input voltage is higher than V_{OUT} + 0.1 V and V_{OUT} is higher than the nominal output voltage, the device automatically enters to the Pass-Through mode. In the Pass-Through mode, the high-side FET is fully turned on and the low side switch is turned off. The output voltage follows the input with the drop caused by the inductor resistance and the high-side FET resistance.

Copyright © 2017, Texas Instruments Incorporated

9 Application and Implementation

NOTE

Information in the following applications sections is not part of the TI component specification, and TI does not warrant its accuracy or completeness. TI's customers are responsible for determining suitability of components for their purposes. Customers should validate and test their design implementation to confirm system functionality.

9.1 Application Information

With a wide input voltage range of 2.3 V to 5.5 V, the TPS6125xA supports applications powered by Li-Ion batteries with extended voltage range. Intended for the low-power applications, it supports up to 1500-mA load current from a battery discharged as low as 3 V and allows the use of low cost chip inductor and capacitors. Different fixed voltage output versions are available from 4.5 V o 5.2 V. The TPS6125xA offers a very small solution size due to minimum amount of external components. It allows the use of small inductors and input capacitors to achieve a small solution size. During the pass-through mode, the output voltage is biased to the input voltage.

9.2 Typical Application

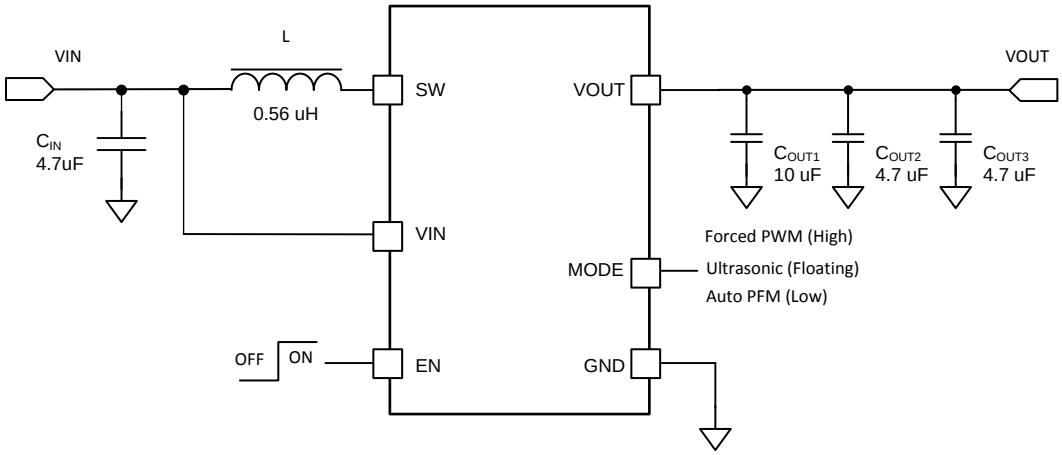

Figure 22. Typical Application Circuit

9.2.1 Design Requirements

In this example, TPS6125xA is used to design a 5-V output Boost converter. The TPS6125xA can be powered by one-cell Li-ion battery. It supports up to 1500-mA output current from the input voltage as low as 3.0 V. During shutdown, the load is completely disconnected from the battery.

9.2.2 Detailed Design Procedure

9.2.2.1 Custom Design With WEBENCH® Tools

Click here to create a custom design using the TPS61253A device with the WEBENCH® Power Designer.

1. Start by entering the input voltage (V_{IN}), output voltage (V_{OUT}), and output current (I_{OUT}) requirements.
2. Optimize the design for key parameters such as efficiency, footprint, and cost using the optimizer dial.
3. Compare the generated design with other possible solutions from Texas Instruments.

The WEBENCH Power Designer provides a customized schematic along with a list of materials with real-time pricing and component availability.

In most cases, these actions are available:

- Run electrical simulations to see important waveforms and circuit performance
- Run thermal simulations to understand board thermal performance

Typical Application (continued)

- Export customized schematic and layout into popular CAD formats
- Print PDF reports for the design, and share the design with colleagues

Get more information about WEBENCH tools at www.ti.com/WEBENCH.

Table 3. List of Components

REFERENCE	DESCRIPTION	PART NUMBER, MANUFACTURER(1)
L	0.56 µH, 6.5 A, 24 mΩ	XEL3515-561MEB, Coilcraft
C_I	4.7 µF, 6.3 V, 0402, X5R ceramic	GRM155R60J475M, muRata
C_{OUT1}	10 µF, 10 V, 0603, X5R ceramic	GRM188R61A106ME69D, muRata
C_{OOUT2}	4.7 µF, 10 V, 0402, X5R ceramic	GRM155R61A475MEAAD, muRata
C_{OOUT3}	4.7 µF, 10 V, 0402, X5R ceramic	GRM155R61A475MEAAD, muRata

(1) See *Third-party Products Discalimer*

9.2.3 Inductor Selection

A boost converter normally requires two main passive components for storing energy during the conversion, an inductor and an output capacitor. It is advisable to select an inductor with a saturation current rating higher than the possible peak current flowing through the power switches.

The inductor peak current varies as a function of the load, the input and output voltages. It can be estimated using Equation 4.

$$I_{L(PEAK)} = \frac{V_{IN} \cdot D}{2 \cdot f \cdot L} + \frac{I_{OUT}}{(1-D)} \quad \text{with} \quad D = 1 - \frac{V_{IN} \cdot \eta}{V_{OUT}} \tag{4}$$

Selecting an inductor with insufficient saturation current can lead to excessive peak current in the converter. This could eventually harm the device and reduce its reliability.

When selecting the inductor, as well as the inductance, parameters of importance are: the maximum current rating, series resistance, and operating temperature. The inductor DC current rating should be greater (by some margin) than the maximum input average current, refer to Equation 5 for more details.

$$I_{L(DC)} = \frac{V_{OUT}}{V_{IN}} \cdot \frac{1}{\eta} \cdot I_{OUT} \tag{5}$$

The TPS6125xA series of step-up converters could support operating with an effective inductance in the range of 0.33 µH to 1.3 µH and with effective output capacitance in the range of 3.5 µF to 30 µF. The internal compensation is optimized for an output filter of the inductance between 0.56 µH and 1 µH and output capacitance from 5 µF to10 µF. Larger or smaller inductor and capacitor values can be used to optimize the performance of the device for specific operating conditions. For more details, see the *Checking Loop Stability* section.

In high-frequency converter applications, the efficiency is essentially affected by the inductor AC resistance (i.e. quality factor) and to a smaller extent by the inductor DCR value. To achieve high efficiency operation, care should be taken in selecting inductors featuring a quality factor above 25 at the switching frequency. Increasing the inductor value produces lower RMS current, but degrades transient response. For a given physical inductor size, increased inductance usually results in an inductor with lower saturation current.

The total losses of the coil consist of both the losses in the DC resistance, $R_{(DC)}$, and the following frequency-dependent components:

- The losses in the core material (magnetic hysteresis loss, especially at high switching frequencies)
- Additional losses in the conductor from the skin effect (current displacement at high frequencies)
- Magnetic field losses of the neighboring windings (proximity effect)
- Radiation losses

The following inductor series from different suppliers have been used with the TPS6125xA converters.

Copyright © 2017, Texas Instruments Incorporated

Table 4. List of Inductors

MANUFACTURER(1)	SERIES	DESCRIPTION	DIMENSIONS (W × L × H)
Coilcraft	XEL3515-561MEB	0.56 µH, 21.5 mΩ DCR, 6.5 A I_{sat}	3.2 mm x 3.5 mm x 1.5 mm
Murata	1277AS-H-1R0M=P2	1 µH, 34 mΩ DCR, 4.6 A I_{sat}	3.2 mm x 2.5 mm x 1.2 mm

(1) See *Third-party Products Discalimer*

9.2.4 Output Capacitor

For the output capacitor, it is recommended to use small ceramic capacitors placed as close as possible to the VOUT and GND pins of the IC. If, for any reason, the application requires the use of large capacitors which can not be placed close to the IC, using a smaller ceramic capacitor in parallel to the large one is highly recommended. This small capacitor should be placed as close as possible to the VOUT and GND pins of the IC. To get an estimate of the recommended minimum output capacitance, Equation 6 can be used.

$$C_{MIN} = \frac{I_{OUT} \cdot (V_{OUT} - V_{IN})}{f \cdot \Delta V \cdot V_{OUT}} \tag{6}$$

Where f is the switching frequency which is 3.8 MHz (typ.) and ΔV is the maximum allowed output ripple.

With a chosen ripple voltage of 25mV, a minimum effective capacitance of 7 µF is needed for maximum 1500mA load. The capacitor could be smaller if the load is lower or the ripple can be larger. The total ripple is larger due to the ESR of the output capacitor. This additional component of the ripple can be calculated using Equation 7

$$V_{ESR} = I_{OUT} \cdot R_{ESR} \tag{7}$$

An MLCC capacitor with twice the value of the calculated minimum should be used due to DC bias effects. This is required to maintain control loop stability. The output capacitor requires either an X7R or X5R dielectric. Y5V and Z5U dielectric capacitors, aside from their wide variation in capacitance over temperature, become resistive at high frequencies. There are no additional requirements regarding minimum ESR. Larger capacitors cause lower output voltage ripple as well as lower output voltage drop during load transients but the total effective output capacitance value should not exceed ca. 30µF.

DC bias effect: high cap. ceramic capacitors exhibit DC bias effects, which have a strong influence on the device's effective capacitance. Therefore the right capacitor value has to be chosen very carefully. Package size and voltage rating in combination with material are responsible for differences between the rated capacitor value and effective capacitance. For instance, a 10-µF X5R 6.3-V 0603 MLCC capacitor would typically show an effective capacitance of less than 4 µF under 5 V bias condition.

9.2.5 Input Capacitor

Multilayer ceramic capacitors are an excellent choice for input decoupling of the step-up converter as they have extremely low ESR and are available in small footprints. Input capacitors should be located as close as possible to the device. While a 4.7-µF input capacitor is sufficient for most applications, larger values may be used to reduce input current ripple without limitations.

Take care when using only ceramic input capacitors. When a ceramic capacitor is used at the input and the power is being supplied through long wires, such as from a wall adapter, a load step at the output can induce ringing at the VIN pin. This ringing can couple to the output and be mistaken as loop instability or could even damage the part. Additional "bulk" capacitance (electrolytic or tantalum) should in this circumstance be placed between C_{IN} and the power source lead to reduce ringing that can occur between the inductance of the power source leads and C_{IN}.

9.2.6 Checking Loop Stability

The first step of circuit and stability evaluation is to look from a steady-state perspective at the following signals:

- Switching node, SW
- Inductor current, I_L
- Output ripple voltage, $V_{OUT(AC)}$

These are the basic signals that need to be measured when evaluating a switching converter. When the switching waveform shows large duty cycle jitter or the oscillation happens for the output voltage or inductor current , the regulation loop may be unstable. This is often a result of board layout and/or L-C combination.

As a next step in the evaluation of the regulation loop, the load transient response is tested. The time between the application of the load transient and the turn on of the high-side FET, the output capacitor must supply all of the current required by the load. V_{OUT} immediately shifts by an amount equal to $\Delta I_{(LOAD)}$ x ESR, where ESR is the effective series resistance of C_{OUT}. $\Delta I_{(LOAD)}$ begins to charge or discharge C_{OUT} generating a feedback error signal used by the regulator to return V_{OUT} to its steady-state value. The results are most easily interpreted when the device operates in PWM mode.

During this recovery time, V_{OUT} can be monitored for settling time, overshoot or ringing that helps judge the converter's stability. Without any ringing, the loop has usually more than 45° of phase margin. Because the damping factor of the circuitry is directly related to several resistive parameters (e.g., MOSFET $r_{DS(on)}$) that are temperature dependant, the loop stability analysis has to be done over the input voltage range, load current range, and temperature range.

9.2.7 Application Curves

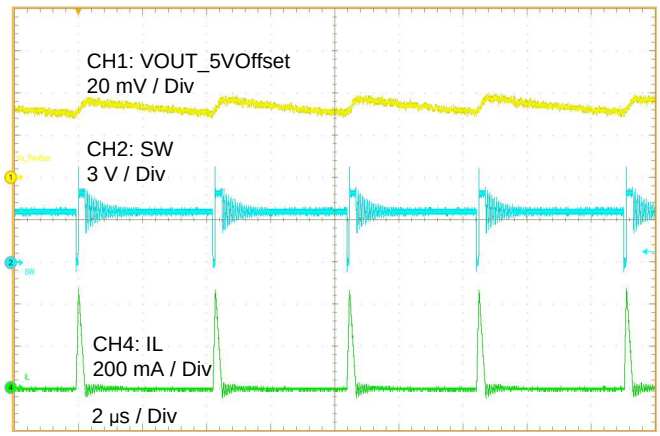

VIN = 3.6 V | VOUT = 5 V | L = 0.56 µH
COUT = 10 µF + 2×4 .7 µF | Load = 10 mA | Auto PFM

Figure 23. Steady 10 mA

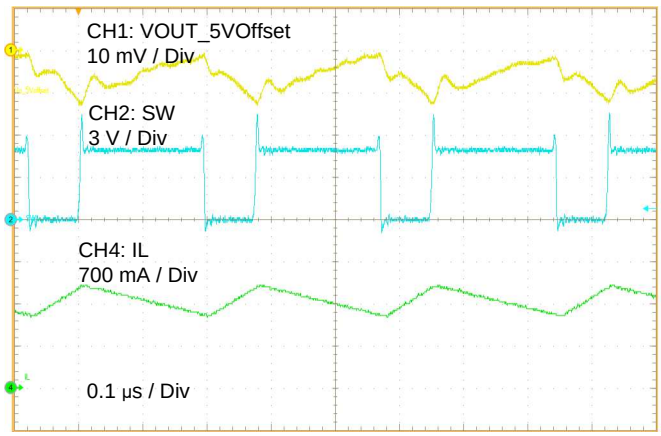

VIN = 3.6 V | VOUT = 5 V | L = 0.56 µH
COUT = 10 µF + 2×4 .7 µF | Load = 1000 mA | Auto PFM

Figure 24. Steady 1000 mA

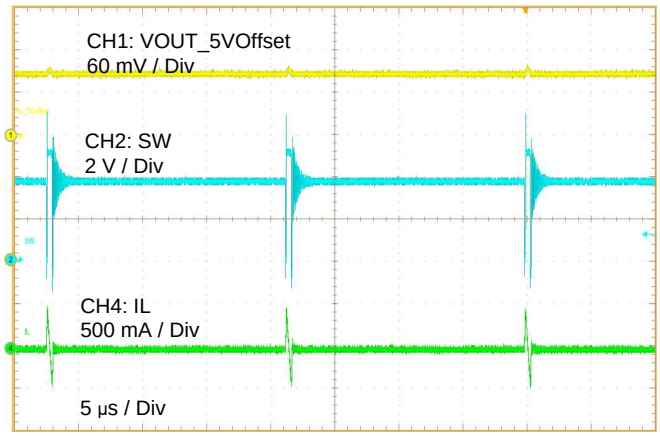

VIN = 3.6 V | VOUT = 5 V | L = 0.56 µH
COUT = 10 µF + 2×4 .7 µF | No Load | Ultrasonic Mode

Figure 25. Steady Ultrasonic Mode

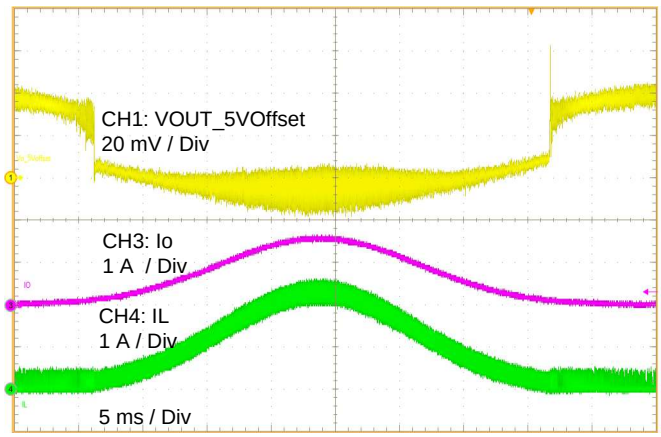

VIN = 3.6 V | VOUT = 5 V | L = 0.56 µH
COUT = 10 µF + 2×4 .7 µF | Auto PFM

Figure 26. Load Sweep

Copyright © 2017, Texas Instruments Incorporated

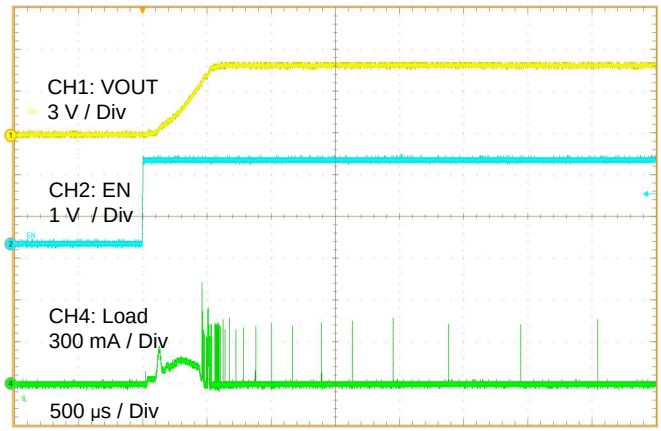

VIN = 3.6 V
COUT = 10 µF + 2×4 .7 µF
VOUT = 5 V
Load = 0 mA
L = 0.56 µH
Auto PFM

Figure 27. Startup by EN

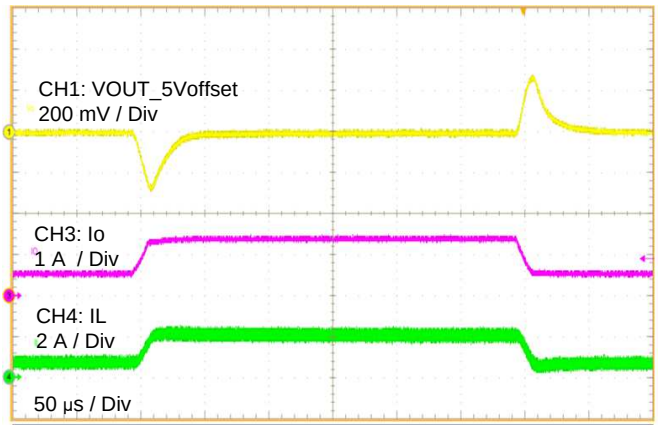

VIN = 3.6 V
COUT = 10 µF + 2×4 .7 µF
VOUT = 5 V
Load = 0.5 A to 1 A , 20 µs / A
L = 0.56 µH
Auto PFM

Figure 28. Load Transient

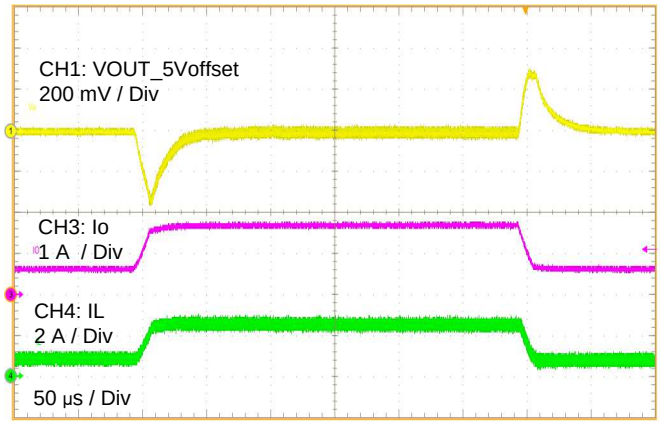

VIN = 3.6 V
COUT = 10 µF
VOUT = 5 V
Load = 0.5 A to 1 A , 20 µs / A
L = 0.56 µH
Auto PFM

Figure 29. Load Transient with 10 µF C_{OUT}

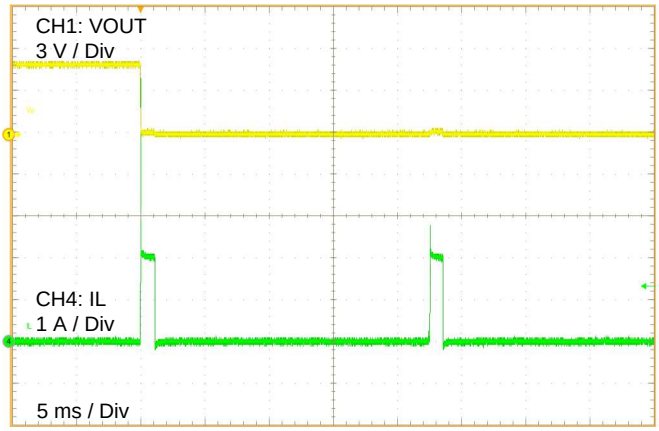

VIN = 3.6 V
COUT = 10 µF + 2×4.7 µF
VOUT = 5 V
Auto PFM
L = 0.56 µH

Figure 30. Short Output

9.3 System Examples

For the < 1000 mA output current application, the output capacitors could be less. Figure 31 shows the typical application circuit for the lower current applications.

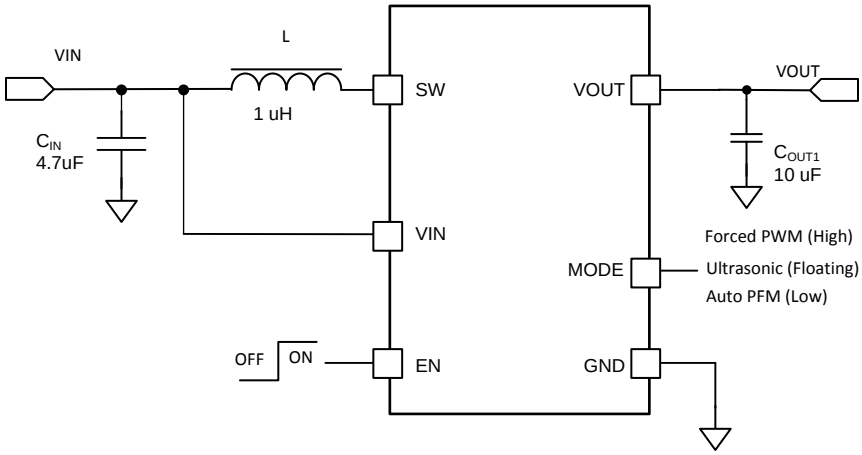

Figure 31. Typical Application with Minimum Output Capacitance

10 Power Supply Recommendations

The power supply can be three-cell alkaline, NiCd or NiMH, or one-cell Li-Ion or Li-Polymer battery. The input supply should be well regulated with the rating of TPS6125xA. If the input supply is located more than a few inches from the device, additional bulk capacitance may be required in addition to the ceramic bypass capacitors. An electrolytic or tantalum capacitor with a value of 47 µF is a typical choice.

Copyright © 2017, Texas Instruments Incorporated

11 Layout

11.1 Layout Guidelines

For all switching power supplies, the layout is an important step in the design, especially at high peak currents and high switching frequencies. If the layout is not carefully done, the regulator could show stability problems as well as EMI problems. Therefore, use wide and short traces for the main current path and for the power ground tracks. The input capacitor, output capacitor, and the inductor should be placed as close as possible to the IC. Use a common ground node for power ground and a different one for control ground to minimize the effects of ground noise. Connect these ground nodes at any place close to the ground pins of the IC.

11.2 Layout Example

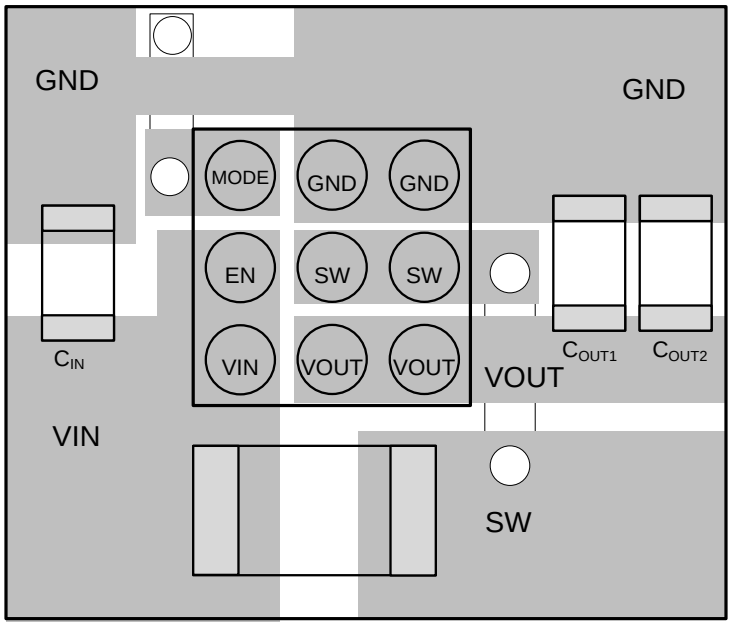

Figure 32. Recommended Layout

11.3 Thermal Considerations

Implementation of integrated circuits in low-profile and fine-pitch surface-mount packages typically requires special attention to power dissipation. Many system-dependent issues such as thermal coupling, airflow, added heat sinks and convection surfaces, and the presence of other heat-generating components affect the power-dissipation limits of a given component.

Three basic approaches for enhancing thermal performance are listed below:

- Improving the power dissipation capability of the PCB design
- Improving the thermal coupling of the component to the PCB
- Introducing airflow in the system

As power demand in portable designs is more and more important, designers must figure the best trade-off between efficiency, power dissipation and solution size. Due to integration and miniaturization, junction temperature can increase significantly which could lead to bad application behaviors (i.e. premature thermal shutdown or worst case reduce device reliability).

Junction-to-ambient thermal resistance is highly application and board-layout dependent. In applications where high maximum power dissipation exists, special care must be paid to thermal dissipation issues in board design. The device operating junction temperature (T_J) should be kept below 125°C.

12 Device and Documentation Support

12.1 Device Support

12.1.1 Development Support

12.1.1.1 Custom Design With WEBENCH® Tools

Click here to create a custom design using the TPS61253A device with the WEBENCH® Power Designer.

1. Start by entering the input voltage (V_{IN}), output voltage (V_{OUT}), and output current (I_{OUT}) requirements.
2. Optimize the design for key parameters such as efficiency, footprint, and cost using the optimizer dial.
3. Compare the generated design with other possible solutions from Texas Instruments.

The WEBENCH Power Designer provides a customized schematic along with a list of materials with real-time pricing and component availability.

In most cases, these actions are available:

- Run electrical simulations to see important waveforms and circuit performance
- Run thermal simulations to understand board thermal performance
- Export customized schematic and layout into popular CAD formats
- Print PDF reports for the design, and share the design with colleagues

Get more information about WEBENCH tools at www.ti.com/WEBENCH.

12.1.2 Third-Party Products Disclaimer

TI'S PUBLICATION OF INFORMATION REGARDING THIRD-PARTY PRODUCTS OR SERVICES DOES NOT CONSTITUTE AN ENDORSEMENT REGARDING THE SUITABILITY OF SUCH PRODUCTS OR SERVICES OR A WARRANTY, REPRESENTATION OR ENDORSEMENT OF SUCH PRODUCTS OR SERVICES, EITHER ALONE OR IN COMBINATION WITH ANY TI PRODUCT OR SERVICE.

12.2 Documentation Support

12.2.1 Related Documentation

For related documentation see the following:

TPS61253AEVM-803 User's Guide, SLVUAP5

12.3 Community Resources

The following links connect to TI community resources. Linked contents are provided "AS IS" by the respective contributors. They do not constitute TI specifications and do not necessarily reflect TI's views; see TI's Terms of Use.

TI E2E™ Online Community ***TI's Engineer-to-Engineer (E2E) Community.*** Created to foster collaboration among engineers. At e2e.ti.com, you can ask questions, share knowledge, explore ideas and help solve problems with fellow engineers.

Design Support ***TI's Design Support*** Quickly find helpful E2E forums along with design support tools and contact information for technical support.

12.4 Trademarks

E2E is a trademark of Texas Instruments.
WEBENCH is a registered trademark of Texas Instruments.
All other trademarks are the property of their respective owners.

12.5 Electrostatic Discharge Caution

These devices have limited built-in ESD protection. The leads should be shorted together or the device placed in conductive foam during storage or handling to prevent electrostatic damage to the MOS gates.

Copyright © 2017, Texas Instruments Incorporated

12.6 Glossary

SLYZ022 — *TI Glossary*.

This glossary lists and explains terms, acronyms, and definitions.

13 Mechanical, Packaging, and Orderable Information

The following pages include mechanical, packaging, and orderable information. This information is the most current data available for the designated devices. This data is subject to change without notice and revision of this document. For browser-based versions of this data sheet, refer to the left-hand navigation.

PACKAGING INFORMATION

Orderable Device	Status (1)	Package Type	Package Drawing	Pins	Package Qty	Eco Plan (2)	Lead/Ball Finish (6)	MSL Peak Temp (3)	Op Temp (°C)	Device Marking (4/5)	Samples
TPS61253AYFFR	ACTIVE	DSBGA	YFF	9	3000	Green (RoHS & no Sb/Br)	SNAGCU	Level-1-260C-UNLIM	-40 to 85	17NI	Samples
TPS61253AYFFT	ACTIVE	DSBGA	YFF	9	250	Green (RoHS & no Sb/Br)	SNAGCU	Level-1-260C-UNLIM	-40 to 85	17NI	Samples

(1) The marketing status values are defined as follows:
ACTIVE: Product device recommended for new designs.
LIFEBUY: TI has announced that the device will be discontinued, and a lifetime-buy period is in effect.
NRND: Not recommended for new designs. Device is in production to support existing customers, but TI does not recommend using this part in a new design.
PREVIEW: Device has been announced but is not in production. Samples may or may not be available.
OBSOLETE: TI has discontinued the production of the device.

(2) Eco Plan - The planned eco-friendly classification: Pb-Free (RoHS), Pb-Free (RoHS Exempt), or Green (RoHS & no Sb/Br) - please check http://www.ti.com/productcontent for the latest availability information and additional product content details.
TBD: The Pb-Free/Green conversion plan has not been defined.
Pb-Free (RoHS): TI's terms "Lead-Free" or "Pb-Free" mean semiconductor products that are compatible with the current RoHS requirements for all 6 substances, including the requirement that lead not exceed 0.1% by weight in homogeneous materials. Where designed to be soldered at high temperatures, TI Pb-Free products are suitable for use in specified lead-free processes.
Pb-Free (RoHS Exempt): This component has a RoHS exemption for either 1) lead-based flip-chip solder bumps used between the die and package, or 2) lead-based die adhesive used between the die and leadframe. The component is otherwise considered Pb-Free (RoHS compatible) as defined above.
Green (RoHS & no Sb/Br): TI defines "Green" to mean Pb-Free (RoHS compatible), and free of Bromine (Br) and Antimony (Sb) based flame retardants (Br or Sb do not exceed 0.1% by weight in homogeneous material)

(3) MSL, Peak Temp. - The Moisture Sensitivity Level rating according to the JEDEC industry standard classifications, and peak solder temperature.

(4) There may be additional marking, which relates to the logo, the lot trace code information, or the environmental category on the device.

(5) Multiple Device Markings will be inside parentheses. Only one Device Marking contained in parentheses and separated by a "~" will appear on a device. If a line is indented then it is a continuation of the previous line and the two combined represent the entire Device Marking for that device.

(6) Lead/Ball Finish - Orderable Devices may have multiple material finish options. Finish options are separated by a vertical ruled line. Lead/Ball Finish values may wrap to two lines if the finish value exceeds the maximum column width.

Important Information and Disclaimer: The information provided on this page represents TI's knowledge and belief as of the date that it is provided. TI bases its knowledge and belief on information provided by third parties, and makes no representation or warranty as to the accuracy of such information. Efforts are underway to better integrate information from third parties. TI has taken and continues to take reasonable steps to provide representative and accurate information but may not have conducted destructive testing or chemical analysis on incoming materials and chemicals. TI and TI suppliers consider certain information to be proprietary, and thus CAS numbers and other limited information may not be available for release.

In no event shall TI's liability arising out of such information exceed the total purchase price of the TI part(s) at issue in this document sold by TI to Customer on an annual basis.

TAPE AND REEL INFORMATION

REEL DIMENSIONS

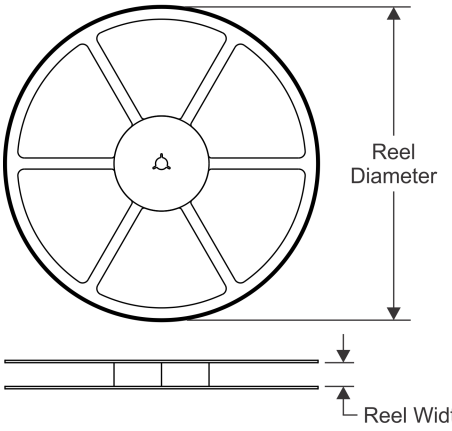

TAPE DIMENSIONS

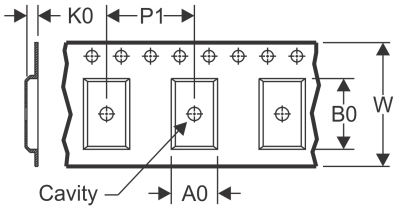

A0	Dimension designed to accommodate the component width
B0	Dimension designed to accommodate the component length
K0	Dimension designed to accommodate the component thickness
W	Overall width of the carrier tape
P1	Pitch between successive cavity centers

QUADRANT ASSIGNMENTS FOR PIN 1 ORIENTATION IN TAPE

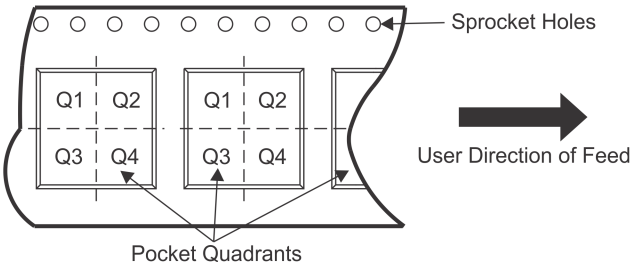

*All dimensions are nominal

Device	Package Type	Package Drawing	Pins	SPQ	Reel Diameter (mm)	Reel Width W1 (mm)	A0 (mm)	B0 (mm)	K0 (mm)	P1 (mm)	W (mm)	Pin1 Quadrant
TPS61253AYFFR	DSBGA	YFF	9	3000	180.0	8.4	1.31	1.41	0.69	4.0	8.0	Q1
TPS61253AYFFT	DSBGA	YFF	9	250	180.0	8.4	1.31	1.41	0.69	4.0	8.0	Q1

TAPE AND REEL BOX DIMENSIONS

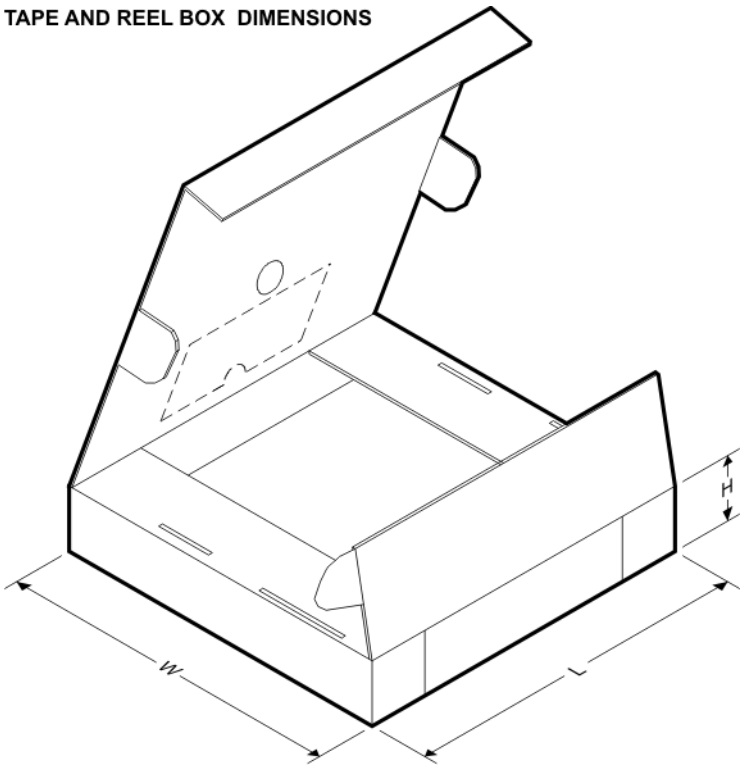

*All dimensions are nominal

Device	Package Type	Package Drawing	Pins	SPQ	Length (mm)	Width (mm)	Height (mm)
TPS61253AYFFR	DSBGA	YFF	9	3000	182.0	182.0	20.0
TPS61253AYFFT	DSBGA	YFF	9	250	182.0	182.0	20.0

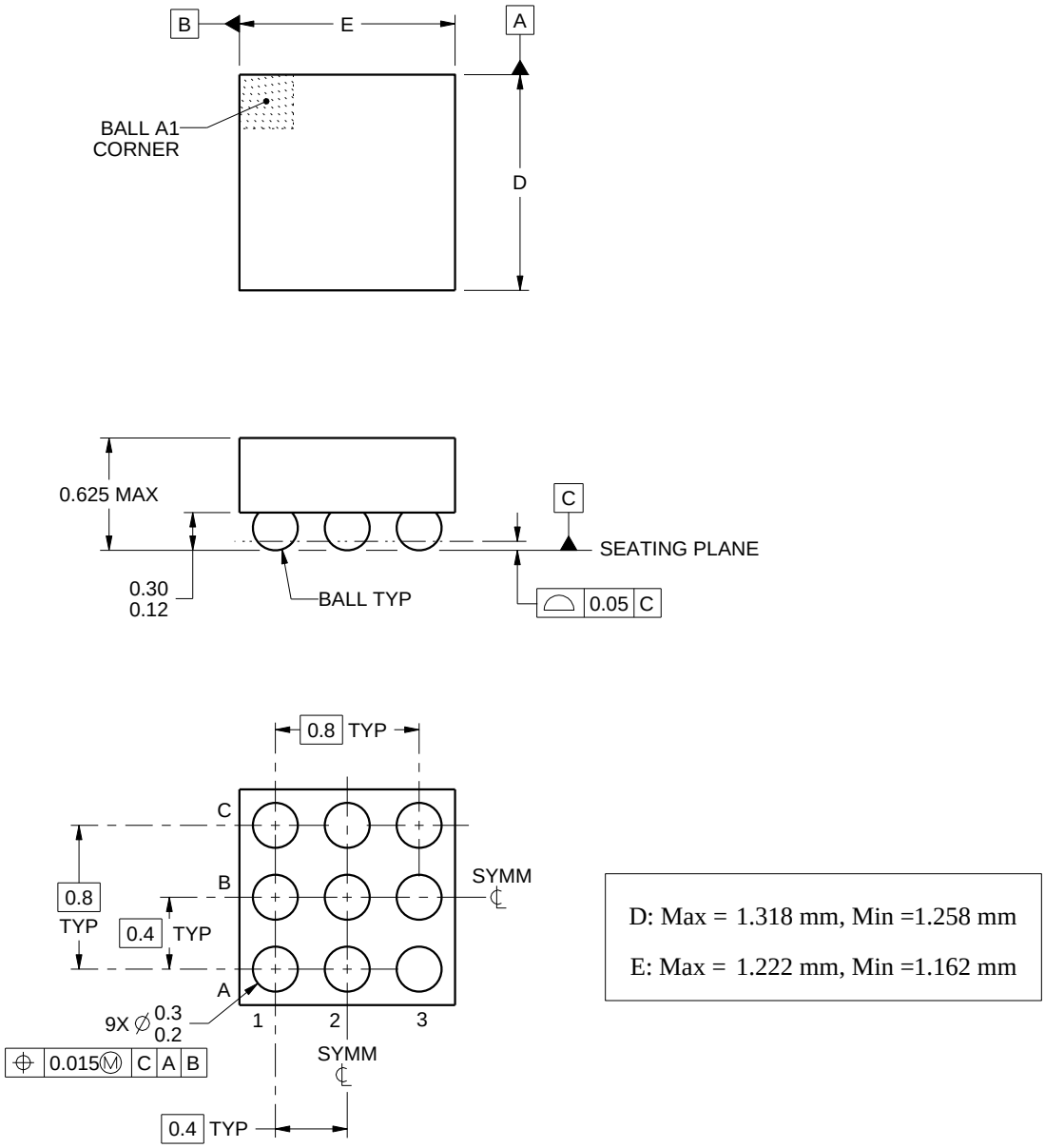

4219552/A 05/2016

NOTES:

1. All linear dimensions are in millimeters. Any dimensions in parenthesis are for reference only. Dimensioning and tolerancing per ASME Y14.5M.
2. This drawing is subject to change without notice.

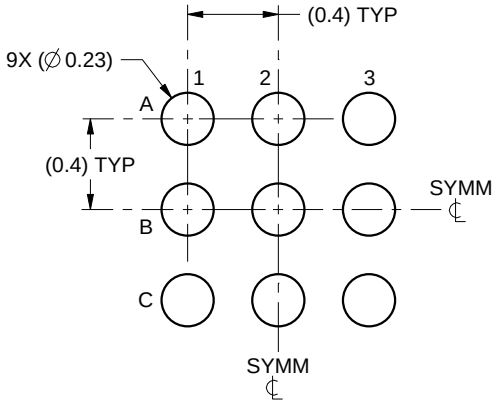

LAND PATTERN EXAMPLE
SCALE:30X

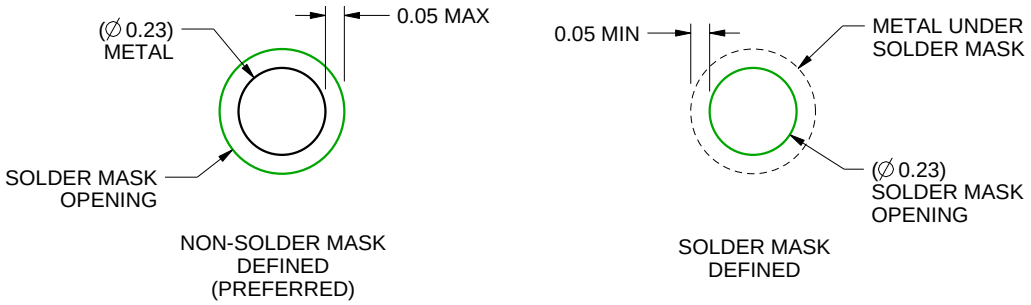

SOLDER MASK DETAILS
NOT TO SCALE

4219552/A 05/2016

NOTES: (continued)

3. Final dimensions may vary due to manufacturing tolerance considerations and also routing constraints. For more information, see Texas Instruments literature number SNVA009 (www.ti.com/lit/snva009).

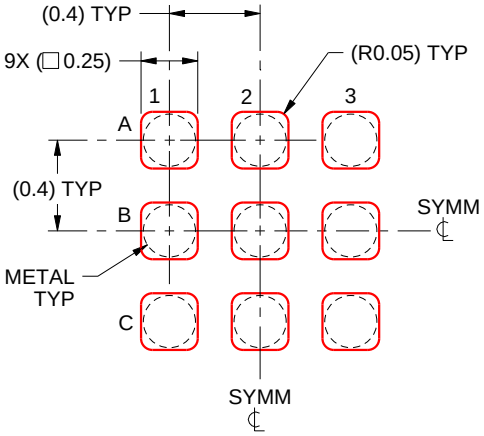

SOLDER PASTE EXAMPLE
BASED ON 0.1 mm THICK STENCIL
SCALE:30X

4219552/A 05/2016

NOTES: (continued)

4. Laser cutting apertures with trapezoidal walls and rounded corners may offer better paste release.

IMPORTANT NOTICE

Texas Instruments Incorporated (TI) reserves the right to make corrections, enhancements, improvements and other changes to its semiconductor products and services per JESD46, latest issue, and to discontinue any product or service per JESD48, latest issue. Buyers should obtain the latest relevant information before placing orders and should verify that such information is current and complete.

TI's published terms of sale for semiconductor products (http://www.ti.com/sc/docs/stdterms.htm) apply to the sale of packaged integrated circuit products that TI has qualified and released to market. Additional terms may apply to the use or sale of other types of TI products and services.

Reproduction of significant portions of TI information in TI data sheets is permissible only if reproduction is without alteration and is accompanied by all associated warranties, conditions, limitations, and notices. TI is not responsible or liable for such reproduced documentation. Information of third parties may be subject to additional restrictions. Resale of TI products or services with statements different from or beyond the parameters stated by TI for that product or service voids all express and any implied warranties for the associated TI product or service and is an unfair and deceptive business practice. TI is not responsible or liable for any such statements.

Buyers and others who are developing systems that incorporate TI products (collectively, "Designers") understand and agree that Designers remain responsible for using their independent analysis, evaluation and judgment in designing their applications and that Designers have full and exclusive responsibility to assure the safety of Designers' applications and compliance of their applications (and of all TI products used in or for Designers' applications) with all applicable regulations, laws and other applicable requirements. Designer represents that, with respect to their applications, Designer has all the necessary expertise to create and implement safeguards that (1) anticipate dangerous consequences of failures, (2) monitor failures and their consequences, and (3) lessen the likelihood of failures that might cause harm and take appropriate actions. Designer agrees that prior to using or distributing any applications that include TI products, Designer will thoroughly test such applications and the functionality of such TI products as used in such applications.

TI's provision of technical, application or other design advice, quality characterization, reliability data or other services or information, including, but not limited to, reference designs and materials relating to evaluation modules, (collectively, "TI Resources") are intended to assist designers who are developing applications that incorporate TI products; by downloading, accessing or using TI Resources in any way, Designer (individually or, if Designer is acting on behalf of a company, Designer's company) agrees to use any particular TI Resource solely for this purpose and subject to the terms of this Notice.

TI's provision of TI Resources does not expand or otherwise alter TI's applicable published warranties or warranty disclaimers for TI products, and no additional obligations or liabilities arise from TI providing such TI Resources. TI reserves the right to make corrections, enhancements, improvements and other changes to its TI Resources. TI has not conducted any testing other than that specifically described in the published documentation for a particular TI Resource.

Designer is authorized to use, copy and modify any individual TI Resource only in connection with the development of applications that include the TI product(s) identified in such TI Resource. NO OTHER LICENSE, EXPRESS OR IMPLIED, BY ESTOPPEL OR OTHERWISE TO ANY OTHER TI INTELLECTUAL PROPERTY RIGHT, AND NO LICENSE TO ANY TECHNOLOGY OR INTELLECTUAL PROPERTY RIGHT OF TI OR ANY THIRD PARTY IS GRANTED HEREIN, including but not limited to any patent right, copyright, mask work right, or other intellectual property right relating to any combination, machine, or process in which TI products or services are used. Information regarding or referencing third-party products or services does not constitute a license to use such products or services, or a warranty or endorsement thereof. Use of TI Resources may require a license from a third party under the patents or other intellectual property of the third party, or a license from TI under the patents or other intellectual property of TI.

TI RESOURCES ARE PROVIDED "AS IS" AND WITH ALL FAULTS. TI DISCLAIMS ALL OTHER WARRANTIES OR REPRESENTATIONS, EXPRESS OR IMPLIED, REGARDING RESOURCES OR USE THEREOF, INCLUDING BUT NOT LIMITED TO ACCURACY OR COMPLETENESS, TITLE, ANY EPIDEMIC FAILURE WARRANTY AND ANY IMPLIED WARRANTIES OF MERCHANTABILITY, FITNESS FOR A PARTICULAR PURPOSE, AND NON-INFRINGEMENT OF ANY THIRD PARTY INTELLECTUAL PROPERTY RIGHTS. TI SHALL NOT BE LIABLE FOR AND SHALL NOT DEFEND OR INDEMNIFY DESIGNER AGAINST ANY CLAIM, INCLUDING BUT NOT LIMITED TO ANY INFRINGEMENT CLAIM THAT RELATES TO OR IS BASED ON ANY COMBINATION OF PRODUCTS EVEN IF DESCRIBED IN TI RESOURCES OR OTHERWISE. IN NO EVENT SHALL TI BE LIABLE FOR ANY ACTUAL, DIRECT, SPECIAL, COLLATERAL, INDIRECT, PUNITIVE, INCIDENTAL, CONSEQUENTIAL OR EXEMPLARY DAMAGES IN CONNECTION WITH OR ARISING OUT OF TI RESOURCES OR USE THEREOF, AND REGARDLESS OF WHETHER TI HAS BEEN ADVISED OF THE POSSIBILITY OF SUCH DAMAGES.

Unless TI has explicitly designated an individual product as meeting the requirements of a particular industry standard (e.g., ISO/TS 16949 and ISO 26262), TI is not responsible for any failure to meet such industry standard requirements.

Where TI specifically promotes products as facilitating functional safety or as compliant with industry functional safety standards, such products are intended to help enable customers to design and create their own applications that meet applicable functional safety standards and requirements. Using products in an application does not by itself establish any safety features in the application. Designers must ensure compliance with safety-related requirements and standards applicable to their applications. Designer may not use any TI products in life-critical medical equipment unless authorized officers of the parties have executed a special contract specifically governing such use. Life-critical medical equipment is medical equipment where failure of such equipment would cause serious bodily injury or death (e.g., life support, pacemakers, defibrillators, heart pumps, neurostimulators, and implantables). Such equipment includes, without limitation, all medical devices identified by the U.S. Food and Drug Administration as Class III devices and equivalent classifications outside the U.S.

TI may expressly designate certain products as completing a particular qualification (e.g., Q100, Military Grade, or Enhanced Product). Designers agree that it has the necessary expertise to select the product with the appropriate qualification designation for their applications and that proper product selection is at Designers' own risk. Designers are solely responsible for compliance with all legal and regulatory requirements in connection with such selection.

Designer will fully indemnify TI and its representatives against any damages, costs, losses, and/or liabilities arising out of Designer's non-compliance with the terms and provisions of this Notice.

Mailing Address: Texas Instruments, Post Office Box 655303, Dallas, Texas 75265
Copyright © 2017, Texas Instruments Incorporated