SPEAr300

Embedded MPU with ARM926 core, flexible memory support, powerful connectivity features and human machine interface

Features

- ARM926EJ-S core up to 333 MHz
- High-performance 8-channel DMA
- Dynamic power-saving features
- Configurable peripheral functions on 102 shared I/Os (please refer to *Table 11: PL_GPIO multiplexing scheme*)
- Memory
  - 32 KB ROM and 56 KB internal SRAM
  - LPDDR-333/DDR2-666 external memory interface (up to 1 GB addressable memory)
  - SDIO/MMC card interface
  - Serial Flash memory interface (SMI)
  - Flexible static memory controller (FSMC) up to 16-bit data bus width, supporting external SRAM, NAND/NOR Flash and FPGAs
  - Serial SPI Flash interface
- Connectivity
  - 2 x USB 2.0 Host
  - USB 2.0 Device
  - Fast Ethernet (MII port)
  - 1x SSP Synchronous serial peripheral (SPI, Microwire or TI protocol)
  - 1x I^2C
  - 1x I^2S,
  - 1x fast IrDA interface
  - 1x UART interface
  - TDM bus (512 timeslots)
  - Up to 8 additional I^2C/SPI chip selects
- Security
  - C3 cryptographic accelerator
- Peripherals supported
  - Camera interface (ITU-601/656 and CSI2 support)
  - TFT/STN LCD controller (resolution up to 1024 x 768 and up to 24 bpp)

LFBGA289 (15 x 15 x 1.7 mm)

  - Touchscreen support (using the ADC)
  - 9 x 9 keyboard controller
  - Glueless management of up to 8 SLICs/CODECs
- Miscellaneous functions
  - Integrated real time clock, watchdog, and system controller
  - 8-channel 10-bit ADC, 1 Msps
  - 1-bit DAC
  - JPEG codec accelerator
  - Six 16-bit general purpose timers with capture mode and programmable prescaler
  - Up to 62 GPIOs

Applications

- SPEAr300 embedded MPU is configurable in 13 sets of peripheral functions targeting a range of applications:
  - General purpose NAND Flash or NOR Flash based devices
  - Digital photo frames
  - WiFi or IP phones (low end or high end)
  - ATA PABX systems (with or without I^2S)
  - 8-bit or 14-bit camera (with or without LCD)

Table 1. Device summary

Order code	Temp range, °C	Package	Packing
SPEAR300-2	- 40 to 85 °C	LFBGA289 (15x15 mm) pitch 0.8 mm	Tray

Contents

1 Description 8

1.1 Main features: 9

2 Architecture overview 11

2.1 ARM926EJ-S CPU 11

2.2 System controller 12

2.2.1 Clock and reset system 12

2.2.2 Power saving system mode control 13

2.3 Vectored interrupt controller (VIC) 14

2.4 General purpose timers 14

2.5 Watchdog timer 14

2.6 RTC oscillator 15

2.7 Multichannel DMA controller 15

2.8 Embedded memory units 15

2.9 Mobile DDR/DDR2 memory controller 15

2.10 Serial memory interface 15

2.11 Flexible static memory controller (FSMC) 17

2.12 UART 17

2.13 Fast IrDA controller (FIrDA) 17

2.14 Synchronous serial port (SSP) 18

2.15 I2C 19

2.16 SPI_I2C multiple slave control 20

2.17 TDM interface 20

2.18 I^2S interface 21

2.19 GPIOs 21

2.20 Keyboard controller 22

2.21 CLCD controller 22

2.22 Camera interface 23

2.23 SDIO controller/MMC card interface 24

2.24 Ethernet controller 25

2.25 USB2 host controller 25

2.26 USB2 device controller 26
2.27 JPEG (CODEC) 26
2.28 Cryptographic co-processor (C3) 27
2.29 8-channel ADC 27
2.30 1-bit DAC 27

3 Pin description 29
3.1 Required external components 29
3.2 Dedicated pins 29
3.3 Shared I/O pins (PL_GPIOs) 35
3.3.1 PL_GPIO pin description 35
3.3.2 Configuration modes 35
3.3.3 Alternate functions 39
3.3.4 Boot pins 39
3.3.5 GPIOs 39
3.3.6 Multiplexing scheme 39
3.4 PL_GPIO pin sharing for debug modes 47

4 Memory mapping 50

5 Electrical characteristics 52
5.1 Absolute maximum ratings 52
5.2 Maximum power consumption 52
5.3 DC electrical characteristics 53
5.4 Overshoot and undershoot 53
5.5 3.3V I/O characteristics 54
5.6 LPDDR and DDR2 pin characteristics 54
5.7 Power up sequence 55
5.8 Removing power supplies for power saving 55
5.9 Power on reset (MRESET) 56

6 Timing requirements 57
6.1 DDR2 timing characteristics 57
6.1.1 DDR2 read cycle timings 57
6.1.2 DDR2 write cycle timings 58

6.1.3 DDR2 command timings 59
6.2 CLCD timing characteristics 59
6.2.1 CLCD timing characteristics direct clock 60
6.2.2 CLCD timing characteristics divided clock 61
6.3 I^2C timing characteristics 62
6.4 FSMC timing characteristics 64
6.4.1 8-bit NAND Flash configuration 65
6.4.2 16-bit NAND Flash configuration 67
6.5 Ether MAC 10/100 Mbps timing characteristics 69
6.5.1 MII transmit timing specifications 69
6.5.2 MII receive timing specifications 70
6.5.3 MDIO timing specifications 70
6.6 SMI - Serial memory interface 72
6.7 SSP timing characteristics 75
6.7.1 SPI master mode timings (clock phase = 0) 76
6.7.2 SPI master mode timings (clock phase = 1) 77
6.8 UART (Universal asynchronous receiver/transmitter) 78

7 Package information 80

8 Revision history 82

List of tables

Table 1. Device summary . . . 1
Table 2. Master clock, RTC, Reset and 3.3 V comparator pin descriptions . . . 29
Table 3. Power supply pin description . . . 29
Table 4. Debug pin descriptions . . . 30
Table 5. Serial memory interface (SMI) pin description . . . 31
Table 6. USB pin descriptions . . . 32
Table 7. ADC pin description . . . 32
Table 8. DDR pin description . . . 33
Table 9. PL_GPIO pin description . . . 35
Table 10. Available peripherals in each configuration mode . . . 41
Table 11. PL_GPIO multiplexing scheme . . . 42
Table 12. Table shading . . . 47
Table 13. Ball sharing during debug . . . 48
Table 14. Memory mapping . . . 50
Table 15. Absolute maximum ratings . . . 52
Table 16. Maximum power consumption . . . 52
Table 17. Recommended operating conditions . . . 53
Table 18. Overshoot and undershoot specifications . . . 53
Table 19. Low voltage TTL DC input specification (3 V< V_{DD} <3.6 V) . . . 54
Table 20. Low voltage TTL DC output specification (3 V< V_{DD} <3.6 V) . . . 54
Table 21. Pull-up and pull-down characteristics . . . 54
Table 22. DC characteristics . . . 54
Table 23. Driver characteristics . . . 54
Table 24. On die termination . . . 55
Table 25. Reference voltage . . . 55
Table 26. DDR2 Read cycle timings . . . 57
Table 27. DDR2 Write cycle timings . . . 58
Table 28. DDR2 Command timings . . . 59
Table 29. CLCD timings with CLCP direct . . . 60
Table 30. CLCD timings with CLCP divided . . . 61
Table 31. Output delays for I^2C signals . . . 62
Table 32. Time characteristics for I^2C in high-speed mode . . . 63
Table 33. Time characteristics for I^2C in fast speed mode . . . 63
Table 34. Time characteristics for I^2C in standard speed mode . . . 63
Table 35. Time characteristics for 8-bit NAND Flash configuration . . . 66
Table 36. Time characteristics for 16-bit NAND Flash configuration . . . 68
Table 37. MII TX timings . . . 69
Table 38. MDC/MDIO timing . . . 71
Table 39. SMIDATAIN timings . . . 72
Table 40. SMIDATAIN timings . . . 73
Table 41. SMICSn fall timings . . . 73
Table 42. SMICSn rise timings . . . 74
Table 43. Timing requirements for SMI . . . 74
Table 44. Timing requirements for SSP (all modes) . . . 75
Table 45. Timing requirements for SPI master mode (clock phase = 0) . . . 76
Table 46. Switching characteristics over recommended operating conditions for SPI master mode (clock phase = 0) . . . 76
Table 47. Timing requirements for SPI master mode (clock phase = 1) . . . 77

Table 48. Switching characteristics over recommended operating conditions for SPI master mode (clock phase = 1) 77
Table 49. UART transmit timing characteristics 79
Table 50. UART receive timing characteristics 79
Table 51. LFBGA289 (15 x 15 x 1.7 mm) mechanical data 80
Table 52. Thermal resistance characteristics 81
Table 53. Document revision history 82

List of figures

Figure 1. Functional block diagram . . . 8
Figure 2. SPEAr300 overview . . . 11
Figure 3. Clock generator overview . . . 13
Figure 4. Multiplexing scheme . . . 40
Figure 5. Power-up sequence . . . 55
Figure 6. Power-down sequence . . . 56
Figure 7. DDR2 Read cycle waveforms . . . 57
Figure 8. DDR2 Read cycle path . . . 57
Figure 9. DDR2 Write cycle waveforms . . . 58
Figure 10. DDR2 Write cycle path . . . 58
Figure 11. DDR2 Command waveforms . . . 59
Figure 12. DDR2 Command path . . . 59
Figure 13. CLCD waveform with CLCP direct . . . 60
Figure 14. CLCD block diagram with CLCP direct . . . 60
Figure 15. CLCD waveform with CLCP divided . . . 61
Figure 16. CLCD block diagram with CLCP divided . . . 61
Figure 17. I^2C output pins . . . 62
Figure 18. I^2C input pins . . . 62
Figure 19. Output signal waveforms for I^2C signals . . . 63
Figure 20. RC delay circuit . . . 64
Figure 21. Output pads for 8-bit NAND Flash configuration . . . 65
Figure 22. Input pads for 8-bit NAND Flash configuration . . . 65
Figure 23. Output command signal waveforms for 8-bit NAND Flash configuration . . . 65
Figure 24. Output address signal waveforms for 8-bit NAND Flash configuration . . . 66
Figure 25. In/out data address signal waveforms for 8-bit NAND Flash configuration . . . 66
Figure 26. Output pads for 16-bit NAND Flash configuration . . . 67
Figure 27. Input pads for 16-bit NAND Flash configuration . . . 67
Figure 28. Output command signal waveforms 16-bit NAND Flash configuration . . . 67
Figure 29. Output address signal waveforms 16-bit NAND Flash configuration . . . 68
Figure 30. In/out data signal waveforms for 16-bit NAND Flash configuration . . . 68
Figure 31. MII TX waveforms . . . 69
Figure 32. Block diagram of MII TX pins . . . 69
Figure 33. MII RX waveforms . . . 70
Figure 34. Block diagram of MII RX pins . . . 70
Figure 35. MDC waveforms . . . 70
Figure 36. Paths from MDC/MDIO pads . . . 71
Figure 37. SMIDATAIN data path . . . 72
Figure 38. SMIDATAOUT/SMICSn data paths . . . 72
Figure 39. SMIDATAOUT timings . . . 73
Figure 40. SMICSn fall timings . . . 73
Figure 41. SMICSn rise timings . . . 74
Figure 42. SSP_CLK timings . . . 75
Figure 43. SPI master mode external timing (clock phase = 0) . . . 77
Figure 44. SPI master mode external timing (clock phase = 1) . . . 78
Figure 45. UART transmit and receive timings . . . 78
Figure 46. LFBGA289 package dimensions . . . 81

1 Description

The SPEAr300 is a member of the SPEAr family of embedded MPUs for networked devices. It is based on the powerful ARM926EJ-S processor (up to 333 MHz), widely used in applications where high computation performance is required.

In addition, SPEAr300 has an MMU that allows virtual memory management -- making the system compliant with advanced operating systems like Linux. It also offers 16 KB of data cache, 16 KB of instruction cache, JTAG and ETM (embedded trace macro-cell) for debug operations.

A full set of peripherals allows the system to be used in many applications, some typical applications being HMI, Security and VoIP phones.

Figure 1. Functional block diagram

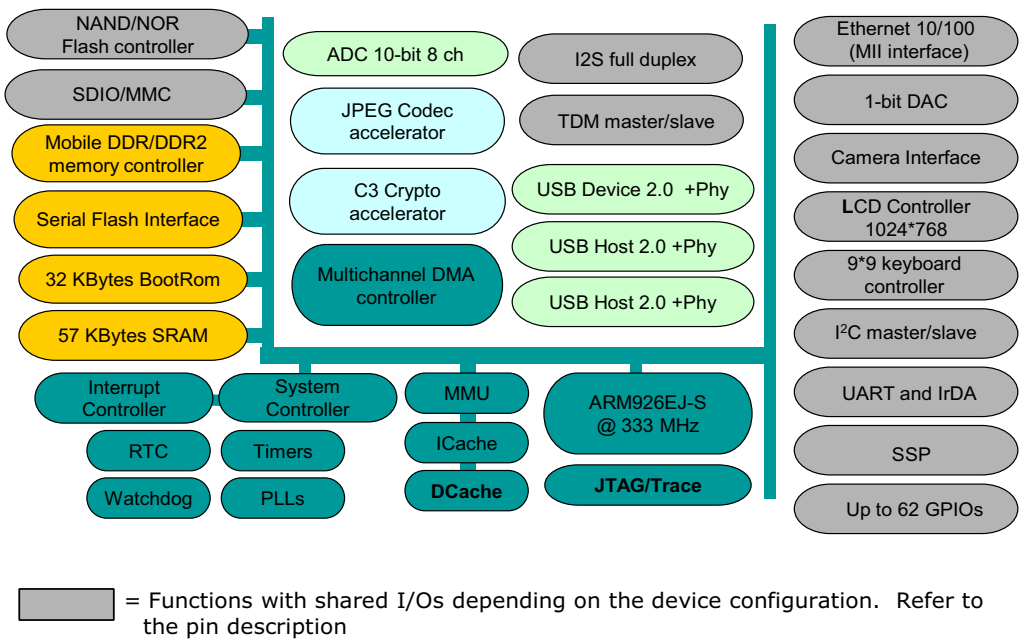

1.1 Main features:

- ARM926EJ-S 32-bit RISC CPU, up to 333 MHz
  - 16 Kbytes of instruction cache, 16 Kbytes of data cache
  - 3 instruction sets: 32-bit for high performance, 16-bit (Thumb) for efficient code density, bytecode Java mode (Jazelle™) for direct execution of Java code.
  - AMBA bus interface
- 32-KByte on-chip BootROM
- 8-KByte on-chip SRAM
- 16-bit mobile DDR/DDR2 memory controller (up to 333 MHz)
- Serial memory interface
- SDIO/MMC interface supporting SPI, SD1, SD4 and SD8 mode with card detect, write protect, LED
- 8/16-bits NOR Flash/NAND Flash controller
- Boot capability from NAND Flash, serial/parallel NOR Flash, Ethernet and UART
- Boot and field upgrade capability from USB
- Multichannel DMA controller
- Color LCD Controller for STN/TFT display panels
  - up to 1024 x 768 resolution
  - 24 bpp true color
- Up to 62 GPIOs (muxed with peripheral I/Os), up to 22 with interrupt capability
- JPEG CODEC accelerator, 1 clock/pixel
- Camera interface ITU-601 with external or embedded synchronization (ITU-656 or CSI2). Picture limit is given by the line length that must be stored in a 2048 x 32 buffer
- C3 Crypto accelerator (DES/3DES/AES/SHA1)
- TDM master/slave
  - Up to 512 timeslots
  - Any input timeslot can be switched to any output timeslot, and/or can be buffered for computation
  - Up to 16 channels of 1 to 4 timeslots buffered during 32 ms
  - Up to 16 buffers can be played in output timeslots
- I^2S interface, full duplex with data buffer for left and right channels allowing up to 64 ms of voice buffer (for 32 bit samples).
- 10-bit ADC, 1 Msps, 8 inputs/1-bit DAC
- 9 x 9 keyboard controller
- Ethernet MAC 10/100 Mbps (MII PHY interface)
- Two USB2.0 host (high-full-low speed) with integrated PHY transceiver
- One USB2.0 device (high-full-low speed) with integrated PHY transceiver
- SSP master/slave (Motorola SPI, Texas instruments, National semiconductor protocols) up to 50 Mbps
- I^2C (slow- fast-high speed, up to 1.2 Mb/s) master/slave
- I/O peripherals
  - UART (speed rate up to 3 Mbps)
  - IrDA (FIR/MIR/SIR) 9.6 kbps to 4 Mbps speed-rate

- Advanced power saving features
  - Normal, Slow, Doze and Sleep modes
  - CPU clock with software-programmable frequency
  - Enhanced dynamic power-domain management
  - Clock gating functionality
  - Low frequency operating mode
  - Automatic power saving controlled from application activity demands
- Vectored interrupt controller
- System and peripheral controller
  - 3 pairs of 16-bit general purpose timers with programmable prescaler.
  - RTC with separate power supply allowing battery connection
  - Watchdog timer
  - Miscellaneous registers array for embedded MPU configuration
- Programmable PLL for CPU and system clocks
- JTAG IEEE 1149.1
- Boundary scan
- ETM functionality multiplexed on primary pins
- Supply voltages
  - 1.2 V core, 1.8 V/2.5 V DDR, 2.5 V PLLs, 1.5 V RTC and 3.3 V I/Os
- Operating temperature: - 40 to 85 °C
- LFBGA289 (15 x15 mm, pitch 0.8 mm)

2 Architecture overview

The SPEAr300 internal architecture is based on several shared subsystem logic blocks interconnected through a multilayer interconnection matrix.

The switch matrix structure allows different subsystem dataflow to be executed in parallel improving the core platform efficiency.

High performance master agents are directly interconnected with the memory controller reducing the memory access latency. The overall memory bandwidth assigned to each master port can be programmed and optimized through an internal efficient weighted round-robin arbitration mechanism.

Figure 2. SPEAr300 overview

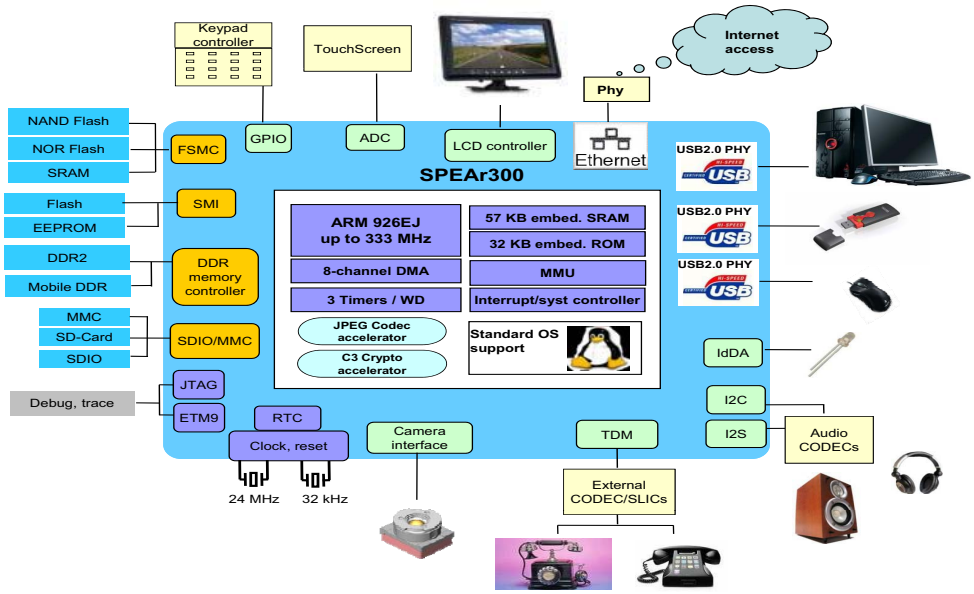

Note: Some interfaces share I/Os. Not all interfaces shown in the figure can be used concurrently

2.1 ARM926EJ-S CPU

The core of the SPEAr300 is an ARM926EJ-S reduced instruction set computer (RISC) processor.

It supports the 32-bit ARM and 16-bit Thumb instruction sets, enabling the user to trade off between high performance and high code density and includes features for efficient execution of Java byte codes.

The ARM CPU and is clocked at a frequency up to 333 MHz. It has a 16-Kbyte instruction cache, a 16-Kbyte data cache, and features a memory management unit (MMU) which makes it fully compliant with Linux and WindowsCE operating systems.

It also includes an embedded trace module (ETM Medium+) for real-time CPU activity tracing and debugging. It supports 4-bit and 8-bit normal trace mode and 4-bit demultiplexed trace mode, with normal or half-rate clock.

2.2 System controller

The System Controller provides an interface for controlling the operation of the overall system.

Main features:

- Power saving system mode control
- Crystal oscillator and PLL control
- Configuration of system response to interrupts
- Reset status capture and soft reset generation
- Watchdog and timer module clock enable
- Remap control
- General purpose peripheral control r
- System and peripheral clock control and status

2.2.1 Clock and reset system

The clock system is a fully programmable block that generates all the clocks for the SPEAr300.

The default operating clock frequencies are:

- CPU_CLK @ 333 MHz for the CPU.
- HCLK @ 166 MHz for AHB bus and AHB peripherals.
- PCLK @ 83 MHz for, APB bus and APB peripherals.
- DDR_CLK @ 100-333 MHz for DDR memory interface.

The above frequencies are the maximum allowed values. The clock frequencies can be modified by programming the clock system registers.

The clock system consists of 2 main parts: a multi clock generator block and two internal PLLs.

Figure 3. Clock generator overview

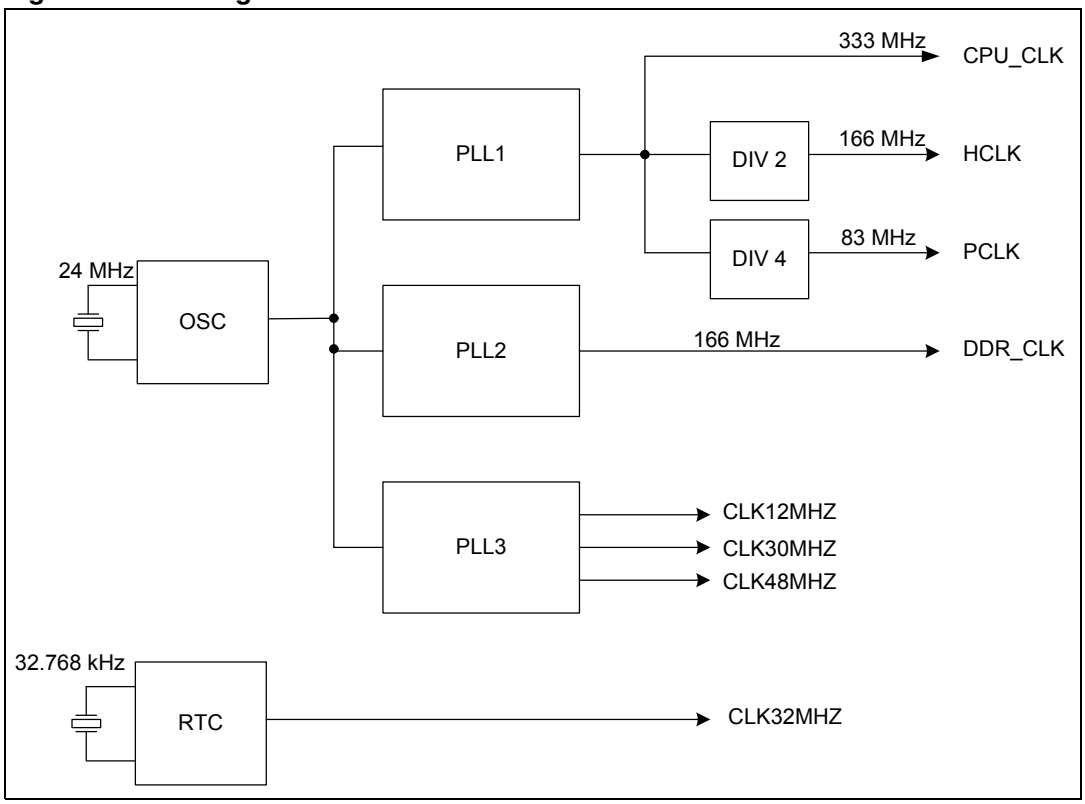

The multi clock generator block, takes a reference signal (which is usually delivered by the PLL), generates all clocks for the IPs of SPEAr300 according to dedicated programmable registers.

Each PLL uses an oscillator input of 24 MHz to generate a clock signal at a frequency corresponding to the highest of the group. This is the reference signal used by the multi clock generator block to obtain all the other required clocks for the group. Its main feature is electromagnetic interference reduction capability.

The user can set up the PLL in order to modulate the VCO with a triangular wave. The resulting signal has a spectrum (and power) spread over a small programmable range of frequencies centered on F0 (the VCO frequency), obtaining minimum electromagnetic emissions. This method replaces all the other traditional methods of EMI reduction, such as filtering, ferrite beads, chokes, adding power layers and ground planes to PCBs, metal shielding and so on. This gives the customer appreciable cost savings.

In sleep mode the SPEAr300 runs with the PLL disabled so the available frequency is 24 MHz or a sub-multiple (/2, /4, /8).

2.2.2 Power saving system mode control

Using three mode control bits, the system controller switch the SPEAr300 to any one of four different modes: DOZE, SLEEP, SLOW and NORMAL.

- **SLEEP mode**: In this mode the system clocks, HCLK and CPU_CLK, are disabled and the System Controller clock is driven by a low speed oscillator (nominally 32768 Hz). When either a FIQ or an IRQ interrupt is generated (through the VIC) the system enters

DOZE mode. Additionally, the operating mode setting in the system control register automatically changes from SLEEP to DOZE.

- **DOZE mode**: In this mode the system clocks, HCLK and CPU_CLK, and the System Controller clock are driven by a low speed oscillator. The System Controller moves into SLEEP mode from DOZE mode only when none of the mode control bits are set and the processor is in Wait-for-interrupt state. If SLOW mode or NORMAL mode is required the system moves into the XTAL control transition state to initialize the crystal oscillator.
- **SLOW mode**: During this mode, both the system clocks and the System Controller clock are driven by the crystal oscillator. If NORMAL mode is selected, the system goes into the "PLL control" transition state. If neither the SLOW nor the NORMAL mode control bits are set, the system goes into the "Switch from XTAL" transition state.
- **NORMAL mode**: In NORMAL mode, both the system clocks and the System Controller clock are driven by the PLL output. If the NORMAL mode control bit is not set, then the system goes into the "Switch from PLL" transition state.

2.3 Vectored interrupt controller (VIC)

The VIC allows the OS interrupt handler to quickly dispatch interrupt service routines in response to peripheral interrupts. There are 32 interrupt lines and the VIC uses a separate bit position for each interrupt source. Software controls each request line to generate software interrupts.

2.4 General purpose timers

SPEAr300 provides three general purpose timers (GPTs) acting as APB slaves.

Each GPT consists of 2 channels, each one made up of a programmable 16-bit counter and a dedicated 8-bit timer clock prescaler. The programmable 8-bit prescaler performs a clock division by 1 up to 256, and different input frequencies can be chosen through SPEAr300 configuration registers (frequencies ranging from 3.96 Hz to 48 MHz can be synthesized).

Two different modes of operation are available:

- Auto-reload mode, an interrupt source is activated, the counter is automatically cleared and then it restarts incrementing.
- Single-shot mode, an interrupt source is activated, the counter is stopped and the GPT is disabled.

2.5 Watchdog timer

The watchdog timer consists of a 32-bit down counter with a programmable timeout interval that has the capability to generate an interrupt and a reset signal on timing out. The watchdog module is intended to be used to apply a reset to a system in the event of a software failure.

2.6 RTC oscillator

The RTC provides a 1-second resolution clock. This keeps time when the system is inactive and can be used to wake the system up when a programmed alarm time is reached. It has a clock trimming feature to compensate for the accuracy of the 32.768 kHz crystal and a secured time update.

2.7 Multichannel DMA controller

Within its basic subsystem, SPEAr300 provides an DMA controller (DMAC) able to service up to 8 independent DMA channels for sequential data transfers between single source and destination (i.e., memory-to-memory, memory-to-peripheral, peripheral to- memory, and peripheral-to-peripheral).

Each DMA channel can support a unidirectional transfer, with internal four-word FIFO per channel.

2.8 Embedded memory units

- 32 Kbytes of BootROM
- Up to 57 Kbytes of SRAM

The size of available SRAM varies according to the peripheral configuration mode See *Table 10.*:

- 57 Kbytes in modes 1 and 2
- 8 Kbytes in modes 3 to 13.

2.9 Mobile DDR/DDR2 memory controller

SPEAr300 integrates a high performances multi-channel memory controller able to support low power Mobile DDR and DDR2 double data rate memory devices. The multi-port architecture ensures memory is shared efficiently among different high-bandwidth client modules.

It has 6 internal ports. One of them is reserved for register access during the controller initialization while the other five are used to access the external memory.

It also include the physical layer (PHY) and some DLLs that allow fine tuning of all the timing parameters to maximize the data valid windows at any frequency in the allowed range.

2.10 Serial memory interface

SPEAr300 provides a serial memory interface (SMI) to SPI-compatible off-chip memories. These serial memories can be used for both data storage and code execution.

Main features:

- Supports the following SPI-compatible Flash and EEPROM devices:
  - STMicroelectronics M25Pxxx, M45Pxxx
  - STMicroelectronics M95xxx, except M95040, M95020 and M95010
  - ATMEL AT25Fxx
  - YMC Y25Fxx
  - SST SST25LFxx
- Acts always as a SPI master and up to 2 SPI slave memory devices are supported (through as many chip select signals), with up to 16 MB address space each
- SMI clock signal (SMICLK) is generated by SMI (and input to all slaves)
- SMICLK can be up to 50 MHz in fast read mode (or 20 MHz in normal mode). It can be controlled by 7 programmable bits.

2.11 Flexible static memory controller (FSMC)

SPEAr300 provides a Flexible Static Memory Controller (FSMC) which interfaces the AHB bus to external NAND/NOR Flash memories and to asynchronous SRAM memories.

Main features:

- Provides an interface between AHB system bus and external parallel memory devices
- Interfaces static memory-mapped devices including RAM, ROM and synchronous burst Flash.
- For SRAM and Flash 8/16-bit wide, external memory and data paths are provided
- FSMC performs only one access at a time and only one external device is accessed.
- Supports little-endian and big-endian memory architectures
- AHB burst transfer handling to reduce access time to external devices
- Supplies an independent configuration for each memory bank
- Programmable timings to support a wide range of devices
  - Programmable wait states (up to 31)
  - Programmable bus turnaround cycles (up to 15)
  - Programmable output enable and write enable delays (up to 15)
- Provides independent chip select control for each memory bank
- Shares the address bus and the data bus with all the external peripherals. Only the chip selects are unique for each peripheral
- External asynchronous wait control

2.12 UART

Main features:

- Hardware/software flow control
- Modem control signals
- Separate 16 x 8 (16 locations deep x 8-bit wide) transmit and 16 x 12 receive FIFOs to reduce CPU interrupts
- Speed up to 3 Mbps.

2.13 Fast IrDA controller (FIrDA)

The fast IrDA controller is a programmable infrared controller that acts as an interface to an off-chip infrared transceiver. This controller is able to perform the modulation and the demodulation of the infrared signals and the wrapping of the IrDA link access protocol (IrLAP) frames.

Main features:

- Supports IrDA serial infrared physical layer specification (IrPHY), version 1.3
- Supports IrDA link access protocol (IrLAP), version 1.1
- Serial infrared (SIR), with rates 9.6 Kbps, 19.2 Kbps, 38.4 Kbps, 57.6 Kbps and
- 115.2 Kbps
- Medium infrared (MIR), with rates 576 Kbps and 1.152 Mbps
- Fast infrared (FIR), with rate 4 Mbps.
- Transceiver interface compliant with all IrDA transceivers with configurable TX and RX signal polarity.
- Half-duplex infrared frame transmission and reception.
- 16-bit CRC algorithm for SIR and MIR, and 32-bit CRC algorithm for FIR.

2.14 Synchronous serial port (SSP)

SPEAr300 provides one synchronous serial port (SSP) block that offers a master or slave interface for synchronous serial communication with slave or master peripherals

Main features:

- Maximum speed of 41.5 Mbps
- Master and slave mode capability
- Programmable clock bit rate and prescale
- Separate transmit and receive first-in, first-out memory buffers, 16 bits wide, 8 locations deep
- Programmable choice of interface operation:
  - SPI (Motorola)
  - Microwire (National Semiconductor)
  - TI synchronous serial
- Programmable data frame size from 4 to 16-bit.
- Independent masking of transmit FIFO, receive FIFO, and receive overrun interrupts
- DMA interface

2.15 I2C

The I2C controller, acts as an APB slave interface to the two-wire serial I2C bus.

Main features:

- Compliance to the I2C-bus specification (Philips)
- I^2C v2.0 compatible.
- Operates in three different speed modes:
  - Standard (100 kbps)
  - Fast (400 kbps)
  - High-speed (3.4 Mbps)
- Master and slave mode configuration possible
- 7-bit or 10-bit addressing
- 7-bit or 10-bit combined format transfers
- Slave bulk data transfer capability.
- Connection with general purpose DMA is provided to reduce the CPU load.
- Interrupt or polled-mode operation

2.16 SPI_I2C multiple slave control

The SPI interface has only one slave select signal, SS0.

The I^2C interface does not allow control of several devices with the same address, which is frequently required for CODECs.

The SPI_I2C extension allows management of up to 8 SPI devices, or 8 I^2C devices at the same address (total SPI+I^2C devices=8).

The SPI extension is made by generating three more slave select signals SS1, SS2 and SS3.

The I^2C extension is done by replicating the I2C_SCL signal if the corresponding pin is set active.Otherwise the pin remains low, so that the start condition is not met.

Each of the 8 pins can reproduce either the SPI SS0 signal, or the I2C_SCL signal. The selection is made through a register.

2.17 TDM interface

The TDM block implements time division multiplexing.

Main features:

- TDM interface with 512 timeslots and up to 16 bufferization channels.
- 32 ms bufferization for 16 channels (of 4 bytes each)
- Supports master and slave mode operation
- Programmable clock and synchronization signal generation in master mode
- Clock & synchronization signal recovery in slave mode
- 8 programmable synchronization signals for CODECs
- Uses 11 pins:
  - SYNC7-0 are dedicated frame syncs for CODECs without timeslot recognition
  - CLK is the TDM clock
  - DIN is the TDM input and receives the data
  - DOUT is the TDM output and transmits the data. It can be high impedance on a unused timeslot
- The TDM interface can be the master or a slave of the CLK or SYNC0 signals.
- Timeslots can be used for switching or bufferization purposes:
  - Switching and bufferization can be used concurrently for different timeslots on the same TDM
  - The only limitation is that an output timeslot can not be switched and bufferized at the same time.
  - Timeslot switching: any of the output time slots can receive any input timeslot of the previous frame. The connection memory is part of the action memory, indicating which timeslot has to be output.
  - Timeslot bufferization: data from DIN is stored in an input buffer and data from an output buffer is played on DOUT. When the number of samples stored/played reaches the buffer size, the processor is interrupted in order to read the input buffer and prepare a new output buffer (or a DMA request is generated).

2.18 I^{2}S interface

The I^{2}S interface is very similar to the TDM block, but the frame sync is limited to Philips I^{2}S definition. It is composed of 4 signals:

- I2S_LRCK; Left and right channels synchronization (Master/slave)
- I2S_CLK: I^{2}S clock (Master/slave)
- I2S_DIN: I^{2}S clock (Master/slave)
- I2S DOUT: I^{2}S output (tri-state)

The DOUT line can be high impedance when out of samples. Data is always stored in 32 bit format in the buffer. A shift left operation is possible to left align the data.

Main features:

- Can be master or slave for the clock and sync signals
- Buffering of up to 1024 samples (512 left and 512 right samples representing 64 ms of voice). Data is stored always on 32 bits.
- Left and right channels are stored in two different buffers.
- Two banks are used to exchange data with the processor.
- In master mode, LRCK can be adjusted for 8, 16 or 32 bits width.
- Data width can be less than LRCK width. Input (received on I2S_DIN) and output (transmitted on DOUT) can be 8, 16 or 32 bits.

2.19 GPIOs

The General Purpose Input/Outputs (GPIOs) provide programmable inputs or outputs.

Main features:

- Individually programmable input/output pins implemented in 3 blocks:
  - Up to 6 base GPIOs in the basic subsystem (basGPIO)
  - Up to 18 GPIOs in the RAS subsystem (G10 and G8)
  - Up to 18 GPIOs in the keyboard controller
  - Up to 8 GPIOs in the independent GPIO block (GPIO[7:0])
- Programmable interrupt generation capability up to 22 pins.
- Base GPIOs and independent GPIOs support bit masking in both read and write operation through address lines.

Up to 62 general purpose I/Os are available in Mode 4 (LEND_IP_ph) (see *Table 10*).

- In this mode the application can use:
  - 10 GPIOs in G10 block
  - 8 GPIOs in G8 block (0 to 3 in output mode only)
  - 18 GPIO (keyboard controller I/Os in GPIO mode)
  - 6 base GPIOs (basGPIO) (enabled as alternate functions (see *Table 11*)
  - 8 IT pins (input only, with interrupt capability)
  - 4 SYNC outputs (SYNC4-7)
  - 8 SPI_I2C outputs

2.20 Keyboard controller

SPEAr300 provides a GPIO/keyboard controller block which is a two-mode input and output port.

Main features:

- The selection between the two modes is an APB Bus programmable bit.
- Keyboard interface uses 18 pins
- 18-bit general-purpose parallel port with input or output single pin programmability
- Pins can be used as general purpose I/O or to drive a 9 x 9 keyboard (81 keys)
- Keyboard scan period can be adjusted between 10 ms and 80 ms
- Supports auto-scanning with debouncing.

2.21 CLCD controller

SPEAr300 has a color liquid crystal display controller (CLCDC) that provides all the necessary control signals to interface directly to a variety of color and monochrome LCD panels.

Main features:

- Resolution programmable up to 1024 x 768
- 16-bpp true-color non-palletized, for color STN and TFT
- 24-bpp true-color non-palletized, for color TFT
- Supports single and dual panel mono super twisted nematic (STN) displays with 4 or 8-bit interfaces
- Supports single and dual-panel color and monochrome STN displays
- Supports thin film transistor (TFT) color displays
- 15 gray-level mono, 3375 color STN, and 32 K color TFT support
- 1, 2, or 4 bits per pixel (bpp) palletized displays for mono STN
- 1, 2, 4 or 8-bpp palletized color displays for color STN and TFT
- Programmable timing for different display panels
- 256 entry, 16-bit palette RAM, arranged as a 128 x 32-bit RAM physically frame, line and pixel clock signals
- AC bias signal for STN and data enable signal for TFT panels patented gray scale algorithm
- Supports little and big-endian

2.22 Camera interface

The camera interface receives data from a sensor in parallel mode (8 to 14-bits) by storing a full line in a buffer memory, then requesting a DMA transfer or interrupting the processor.

When all the lines of a frame are transferred, a frame sync interrupt is generated.

Main features:

- Supports both hardware synchronization (HSYNC and VSYNC signals) and embedded synchronization (ITU656 or CSI2).
- Data carried by the bus can be:
  - Raw Bayer10 (10-14 bits/pixel – 2 Bytes), Raw Bayer8 (8 bits/pixel – 1 Byte),
  - YCbCr400 (1 Byte/pixel – 1 Byte), YCbCr422 (4 Bytes/ 2 pixels – 2*2 Bytes), YCbCr444 (3 Bytes/ pixel – 4 Bytes)
  - RGB444 (2 Bytes/ pixel – 2 Bytes), RGB565 (2 Bytes/ pixel – 2 Bytes), RGB888 (3 Bytes/ pixel – 4 Bytes)
  - JPEG compressed
- Data is stored in a 2048 x 32 buffer memory
- The camera interface can be assigned to two different set of pins. When using data greater than 8-bits, it is not possible to use the MII interface.
- Max pixel clock frequency is 100 MHz

2.23 SDIO controller/MMC card interface

The SDIO host controller has an AMBA compatible interface and conforms to the SD host controller standard specification version 2.0. It handles SD/SDIO protocol at transmission level, packing data, adding cyclic redundancy check (CRC), start/end bit, and checking for transaction format correctness.

Main features:

- Meets the following standard specifications:
  - SD host controller standard specification version 2.0
  - SDIO card specification version 2.0
  - SD memory card specification draft version 2.0
  - SD memory card security specification version 1.01
  - MMC specification version 3.31 and 4.2
- Supports both DMA and non-DMA mode of operation
- Supports MMC plus and MMC mobile
- Card detection (insertion/removal)
- Password protection of cards
- Host clock rate variable between 0 and 48 MHz
- Supports 1-bit, 4-bit and 8-bit SD modes and SPI mode
- Supports Multi Media Card interrupt mode
- Allows card to interrupt host in 1-bit, 4-bit, 8-bit SD modes and SPI mode.
- Up to 100 Mbit/s data rate using 4 parallel data lines (sd4-bit mode)
- Up to 416 Mbit/s data rate using 8-bit parallel data lines (sd8-bit mode)
- Cyclic redundancy check CRC7 for command and CRC16 for data integrity
- Designed to work with I/O cards, read-only cards and read/write cards
- Error correction code (ECC) support for MMC4.2 cards
- Supports read wait control, suspend/resume operation
- Supports FIFO overrun and underrun condition by stopping the SD clock
- Conforms to AMBA specification AHB (2.0)

2.24 Ethernet controller

SPEAr300 provides an Ethernet MAC 10/100 Universal (commonly referred to as GMAC-UNIV), enabling to transmit and receive data over Ethernet in compliance with the IEEE 802.3-2002 standard.

Note: GMAC is a hardware block implementing Ethernet MAC layer 2 processing. GMAC is configured for 10/100 Mbps operation on SPEAr3xx family and up to 1 Gbps on SPEAr600.

Main features:

- Compliant with the IEEE 802.3-2002 standard
- Supports the default MII interface to the external PHY
- Supports 10/100 Mbps data transfer rates
- Local FIFO available (4 Kbyte RX, 2 Kbyte TX)
- Supports both half-duplex and full-duplex operation. In half-duplex operation, CSMA/CD protocol is provided for, as well as packet bursting and frame extension at 100 Mbps
- Programmable frame length to support both standard and jumbo Ethernet frames with size up to 16 Kbyte
- A variety of flexible address~~es~~ filtering modes are supported
- A set of control and status registers (CSRs) to control MAC core operation
- Native DMA with single-channel transmit and receive engines
- DMA implements dual-buffer (ring) or linked-list (chained) descriptor chaining
- An AHB slave acting as programming interface to access all CSRs, for both DMA and MAC core subsystems
- An AHB master for data transfer to system memory
- 32-bit AHB master bus width, supporting 32, 64, and 128-bit wide data transactions
- It supports both little and big endian memory architectures

2.25 USB2 host controller

SPEAr300 has a fully independent USB 2.0 host controller, consisting of the following six major blocks:

- An EHCI block for high-speed transfers (HS mode, 480 Mbps)
- 2 OHCI blocks for full and low speed transfers (FS and LS modes, 12 and 1.5 Mbps)
- Local 2-Kbyte FIFO
- Local DMA
- Integrated USB2 transceiver (PHY)

This host can manage an external power switch, providing a control line to enable or disable the power, and an input line to sense any over-current condition detected by the external switch.

The Host controller is capable of managing two different devices at a time on its two downstream ports.

- An HS device connected to either of the two ports is managed by the EHCI.
- An FS/LS device connected to port0 is managed by OHCI0.
- An FS/LS device connected to port1 is managed by OHCI1.

2.26 USB2 device controller

Main features:

- Supports the 480 Mbps high-speed mode (HS) for USB 2.0, as well as the 12 Mbps full-speed (FS) and the 1.5 Mbps low-speed (LS modes) for USB 1.1
- Supports 16 physical endpoints, which can be assigned to different interfaces and configurations to implement logical endpoints
- Integrated USB transceiver (PHY)
- Local 4 Kbyte FIFO shared by all endpoints
- DMA mode and slave-only mode are supported
- In DMA mode, the UDC supports descriptor-based memory structures in application memory
- In both modes, an AHB slave is provided by UDC-AHB, acting as programming interface to access to memory-mapped control and status registers (CSRs)
- An AHB master for data transfer to system memory is provided, supporting 8, 16, and 32-bit wide data transactions on the AHB bus
- A USB plug detect (UPD) which detects the connection of a cable.

2.27 JPEG (CODEC)

SPEAr300 provides a JPEG CODEC with header processing (JPGC), able to decode (or encode) image data contained in the RAM memory, from the JPEG (or MCU) format to the MCU (or JPEG) format.

Main features:

- Compliance with the baseline JPEG standard (ISO/IEC 10918-1)
- Single-clock per pixel encoding/decoding
- Support for up to four channels of component color
- 8-bit/channel pixel depths
- Programmable quantization tables (up to four)
- Programmable Huffman tables (two AC and two DC)
- Programmable minimum coded unit (MCU)
- Configurable JPEG headers processing
- Support for restart marker insertion
- Use of two DMA channels and of two 8 x 32-bits FIFO's (local to the JPEG) for efficient transferring and buffering of encoded/decoded data from/to the CODEC core.

2.28 Cryptographic co-processor (C3)

Main features:

- Supported cryptographic algorithms:
  - Advanced encryption standard (AES) cipher in ECB, CBC, CTR modes
  - Data encryption standard (DES) cipher in ECB and CBC modes.
  - SHA-1, HMAC-SHA-1, MD5, HMAC-MD5 digests.
- Instruction driven DMA based programmable engine.
- AHB master port for data access from/to system memory.
- AHB slave port for co-processor register accesses and initial engine-setup
- The co-processor is fully autonomous (DMA input reading, cryptographic operation execution, DMA output writing) after being set up by the host processor
- The co-processor executes programs written by the host in memory, it can execute an unlimited list of programs.
- The co-processor supports hardware chaining of cryptographic blocks for optimized execution of data-flow requiring multiple algorithms processing over the same set of data (for example encryption + hashing on the fly)

2.29 8-channel ADC

Main features:

- Successive approximation conversion method
- 10-bit resolution @1 Msps
- Hardware supporting up to 13.5 bits resolution at 8 ksps by oversampling and accumulation
- Eight analog input (AIN) channels, ranging from 0 to 2.5 V
- INL ± 1 LSB, DNL ± 1 LSB
- Programmable conversion speed, (min. conversion time is 1 s)
- Programmable average results from 1 (no averaging) up to 128
- Programmable auto scan for all the eight channels.
- Normal or enhanced mode;
  - In normal mode the conversion start upon CPU request
  - In enhanced mode the ADC converts continuously the selected channels inserting a selectable amount of time between two conversions.

2.30 1-bit DAC

The one-bit DAC is a second-order noise shaper based on the TDM hardware. The action memory determines whether a new sample needs to be sent to the DAC during the next byte. Samples are read from the buffer memory.

Main features:

- Input data must be 32-bits wide, either in 2's complement or binary form.
- Oversampling min 32, max 256
- S/N ratio is 82 dB, THD is 72 dB (Measured on a 1 kHz sine wave x64 over sampled by the processor and x32 by the DAC)
- Dynamic: 80% of full scale
- Optionally, the order of the noise shaper can be set to 1

3 Pin description

The following tables describe the pinout of the SPEAr300 listed by functional block.

List of abbreviations:

PU = Pull Up

PD = Pull Down

3.1 Required external components

1. DDR_COMP_1V8: place an external 121 kΩ resistor between ball P4 and ball R4
2. USB_TX_RTUNE: connect an external 43.2 kΩ pull-down resistor to ball K5
3. DIGITAL_REXT: place an external 121 kΩ resistor between ball G4 and ball F4.

3.2 Dedicated pins

Table 2. Master clock, RTC, Reset and 3.3 V comparator pin descriptions

Group	Signal name	Ball	Direction	Function	Pin type
Master Clock	MCLK_XI	P1	Input	24 MHz (typical) crystal in	Oscillator 2.5 V capable
	MCLK_XO	P2	Output	24 MHz (typical) crystal out	
RTC	RTC_XI	E2	Input	32 kHz crystal in	Oscillator 1.5 V capable
	RTC_XO	E1	Output	32 kHz crystal out	
Reset	MRESET#	M17	Input	Main Reset	TTL Schmitt trigger input buffer, 3.3 V tolerant, PU
3.3 V Comp.	DIGITAL_REXT	G4	Output	Configuration	Analog, 3.3 V capable
	DIGITAL_GND_REX	F4	Power	Power	Power

Table 3. Power supply pin description

Group	Signal name	Ball	Value
DIGITAL GROUND	GND	G6, G7, G8, G9, G10, G11, H6, H7, H8, H9, H10, H11, J6, J7, J8, J9, J10, J11, K6, K7, K8, K9, K10, K11, L6, L7, L8, L9, L10, M8, M9, M10	0 V
ANALOG GROUND	AGND	F2, G1, J2, L1, L3, L5, N2, N4, P3, R3,N12	0 V
I/O	VDD3	F5, F6, F7, F10, F11, F12, G5, J12, K12, L12, M12	3.3 V

Table 3. Power supply pin description (continued)

Group	Signal name	Ball	Value
CORE	VDD	F8, F9, G12, H5, H12, J5, L11, M6, M7, M11	1.2 V
USB HOST0 PHY	HOST0_VDDbc	L2	2.5 V
	HOST0_VDDb3	K4	3.3 V
	HOST0_VDDbs	M3	1.2 V
USB HOST 1 PHY	HOST1_VDDbc	K3	2.5 V
	HOST1_VDDb3	J1	3.3 V
	HOST1_VDDbs	M3	1.2 V
USB DEVICE PHY	DEVICE_VDDbc	N1	2.5 V
	DEVICE_VDDb3	N3	3.3 V
	HOST0_VDDbs	M3	1.2V
OSCI (master clock)	MCLK_VDD	R1	1.2V
	MCLK_VDD2v5	R2	2.5 V
PLL1	DITH1_AVDD	G2	2.5 V
PLL2	DITH2_AVDD	M4	2.5 V
DDR I/O	SSTL_VDDe	M5, N5, N6, N7, N8, N9, N10, N11	1.8 V
ADC	ADC_AVDD	N13	2.5 V
OSCI RTC	RTC VDD	F1	1.5 V

Table 4. Debug pin descriptions

Group	Signal name	Ball	Direction	Function	Pin type
DEBUG	TEST_0	K16	Input	Test[4:0] configuration ports. For functional mode, they have to be set to 00110.	TTL input buffer, 3.3 V tolerant, PD
	TEST_1	K15			
	TEST_2	K14			
	TEST_3	K13			
	TEST_4	J15			
	BOOT_SEL	J14			
	nTRST	L16	Input	Test reset input	TTL Schmitt trigger input buffer, 3.3 V tolerant, PU
	TDO	L15	Output	Test data output	TTL output buffer, 3.3 V capable 4 mA
	TCK	L17	Input	Test clock	TTL Schmitt trigger input buffer, 3.3 V tolerant, PU
	TDI	L14	Input	Test data input	
	TMS	L13	Input	Test mode select	

Table 5. Serial memory interface (SMI) pin description

Group	Signal name	Ball	Direction	Function	Pin type
SMI	SMI_DATAIN	M13	Input	Serial Flash input data	TTL Input Buffer 3.3 V tolerant, PU
	SMI_DATAOUT	M14	Output	Serial Flash output data	TTL output buffer 3.3 V capable 4 mA
	SMI_CLK	N17	I/O	Serial Flash clock	
	SMI_CS_0	M15	Output	Serial Flash chip select	
	SMI_CS_1	M16			

Table 6. USB pin descriptions

Group	Signal name	Ball	Direction	Function	Pin type
USB DEV	DEV_DP	M1	I/O	USB Device D+	Bidirectional analog buffer 5 V tolerant
	DEV_DM	M2		USB Device D-	
	DEV_VBUS	G3	Input	USB Device VBUS	TTL input buffer 3.3 V tolerant, PD
	HOST1_DP	H1	I/O	USB HOST1 D+	Bidirectional analog buffer 5 V tolerant
	HOST1_DM	H2		USB HOST1 D-	
USB HOST	HOST1_VBUS	H3	Output	USBHOST1 VBUS	TTL output buffer 3.3 V capable, 4 mA
	HOST1_OVRC	J4	Input	USB Host1 Over-Current	TTL input buffer 3.3 V tolerant, PD
	HOST0_DP	K1	I/O	USB HOST0 D+	Bidirectional analog buffer 5 V tolerant
	HOST0_DM	K2		USB HOST0 D-	
	HOST0_VBUS	J3	Output	USB HOST0 VBUS	TTL output buffer 3.3 V capable, 4 mA
	HOST0_OVRC	H4	Input	USB Host0 Over-current	TTL Input Buffer 3.3 V tolerant, PD
	USB_TXRTUNE	K5	Output	Reference resistor	Analog
	USB_ANALOG_TEST	L4	Output	Analog Test Output	Analog

Table 7. ADC pin description

Group	Signal name	Ball	Direction	Function	Pin type
ADC	AIN_0	N16	Input	ADC analog input channel	Analog buffer 2.5 V tolerant
	AIN_1	N15			
	AIN_2	P17			
	AIN_3	P16			
	AIN_4	P15			
	AIN_5	R17			
	AIN_6	R16			
	AIN_7	R15			
	ADC_VREFN	N14		ADC negative voltage reference	
	ADC_VREFP	P14		ADC positive voltage reference	

Table 8. DDR pin description

Group	Signal name	Ball	Direction	Function	Pin type
DDR	DDR_ADD_0	T2	Output	Address Line	SSTL_2/SSTL_18
	DDR_ADD_1	T1			
	DDR_ADD_2	U1			
	DDR_ADD_3	U2			
	DDR_ADD_4	U3			
	DDR_ADD_5	U4			
	DDR_ADD_6	U5			
	DDR_ADD_7	T5			
	DDR_ADD_8	R5			
	DDR_ADD_9	P5			
	DDR_ADD_10	P6			
	DDR_ADD_11	R6			
	DDR_ADD_12	T6			
	DDR_ADD_13	U6			
	DDR_ADD_14	R7			
	DDR_BA_0	P7	Output	Bank select	
	DDR_BA_1	P8			
	DDR_BA_2	R8			
	DDR_RAS	U8	Output	Row Add. Strobe	
	DDR_CAS	T8	Output	Col. Add. Strobe	
	DDR_WE	T7	Output	Write enable	
	DDR_CLKEN	U7	Output	Clock enable	
	DDR_CLK_P	T9	Output	Differential clock	Differential SSTL_2/SSTL_18
	DDR_CLK_N	U9			

Table 8. DDR pin description (continued)

Group	Signal name	Ball	Direction	Function	Pin type
DDR	DDR_CS_0	P9	Output	Chip Select	SSTL_2/SSTL_18
	DDR_CS_1	R9			
	DDR_ODT_0	T3	I/O	On-Die Termination Enable lines	
	DDR_ODT_1	T4			
	DDR_DATA_0	P11	I/O	Data Lines (Lower byte)	
	DDR_DATA_1	R11			
	DDR_DATA_2	T11			
	DDR_DATA_3	U11			
	DDR_DATA_4	T12			
	DDR_DATA_5	R12			
	DDR_DATA_6	P12			
	DDR_DATA_7	P13			
	DDR_DQS_0	U10	Output	Lower Data Strobe	Differential SSTL_2/SSTL_18
	DDR_nDQS_0	T10			
	DDR_DM_0	U12	Output	Lower Data Mask	SSTL_2/SSTL_18
	DDR_GATE_0	R10	I/O	Lower Gate Open	
	DDR_DATA_8	T17	I/O	Data Lines (Upper byte)	
	DDR_DATA_9	T16			
	DDR_DATA_10	U17			
	DDR_DATA_11	U16			
	DDR_DATA_12	U14			
	DDR_DATA_13	U13			
	DDR_DATA_14	T13			
	DDR_DATA_15	R13			
	DDR_DQS_1	U15	I/O	Upper Data Strobe	Differential SSTL_2/SSTL_18
	DDR_nDQS_1	T15			
	DDR_DM_1	T14	I/O	Upper Data Mask	SSTL_2/SSTL_18
	DDR_GATE_1	R14		Upper Gate Open	
	DDR_VREF	P10	Input	Reference Voltage	Analog
	DDR_MEM_COMP_GND	R4	Power	Return for Ext. Resistors	Power
	DDR_MEM_COMP_REXT	P4	Power	Ext. Resistor	Analog
	DDR2_EN	J13	Input	Configuration	TTL Input Buffer 3.3 V Tolerant, PU

3.3 Shared I/O pins (PL_GPIOs)

SPEAr300 devices feature, in the Reconfigurable Array Subsystem (RAS), specific sets of IPs as well as groups of software controllable GPIOs (that can be used alternatively). In the SPEAr300 the following IPs are implemented in the RAS:

- FSMC NAND/NOR Flash interface
- GPIO/Keyboard controller
- 8-bit camera interface
- CLCD controller interface
- Digital-to-analog converter (DAC)
- I2S
- 4 SPI/I2C control signals
- TDM block
- SDIO interface
- GPIOs

The 98 PL_GPIO and 4 PL_CLK pins have the following characteristics:

- Output buffer: TTL 3.3 V capable up to 10 mA
- Input buffer: TTL, 3.3 V tolerant, selectable internal pull up/pull down (PU/PD)

The PL_GPIOs can be configured in 13 different modes. This allows SPEAr300 to be tailored for use in various applications, see *Section 3.3.2*.

3.3.1 PL_GPIO pin description

Table 9. PL_GPIO pin description

Group	Signal name	Ball	Direction	Function	Pin type
PL_GPIOs	PL_GPIO_97... PL_GPIO_0	(see *Table 11*)	I/O	General purpose I/O or multiplexed pins (see *Table 11*)	(see the introduction of the *Section 3.3* above)
	PL_CLK1... PL_CLK4			Programmable logic external clocks	

3.3.2 Configuration modes

This section describes the main operating modes created by using a selection of the embedded IPs.

13 configurations are available selected by RAS register 2. The peripherals available in each configuration are shown in *Table 10: Available peripherals in each configuration mode* Details of each PL_GPIO pin are given for each mode in *Table 11: PL_GPIO multiplexing scheme*.

The following modes can be selected by programming some control registers present in the reconfigurable array subsystem.

- NAND mode
- NOR Mode
- PHOTO_FRAME Mode (PHOTO FRAME)
- LEND_IP_PHONE Mode (LOW END IP PHONE)
- HEND_IP_PHONEMode (HIGH END IP PHONE)
- LEND_WIFI_PHONE Mode (LOW END WI-FI PHONE)
- HEND_WIFI_PHONE Mode (HIGH END WI-FI PHONE)
- ATA_PABX_wI2S Mode (ATA PABX without I2S)
- ATA_PABX_I2S Mode (ATA PABX with I2S)
- CAMl_LCDw Mode (8-bit CAMERA without LCD)
- CAMu_LCD Mode (14-bit camera with LCD)
- CAMu_wLCD Mode (14-bit camera without LCD)
- CAMl_LCD Mode (8-bit camera with LCD)

Configuration 1 is the default mode for SPEAr300. It supports the FSMC interface for NAND Flash connectivity and boot pins used for selecting the boot mode.

Mode 1: NAND interface

NAND mode mainly provides:

- NAND Flash interface (16 bits, 5 control signals)

Mode 2: NOR interface

NOR mode mainly provides:

- External Memory Interface (16 data bits, 24 address bits and 4 chip selects)

Mode 3: Photo frame

Photo frame mode mainly provides:

- NAND Flash interface (16 bits, 5 control signals)
- CLCD controller interface
- TDM for voice/music capabilities
- SDIO interface supporting SPI, SD1, SD4 and SD8 mode
- GPIOs with interrupt capability

Mode 4: Low end IP phone

Low end IP phone mode mainly provides:

- 9x9 keyboard
- 8 SPI/I2C control signals
- I2S block
- GPIOs with interrupt capability
- Digital-to-analog converter (DAC)

Mode 5: High end IP phone

Main features:

- 9x9 keyboard
- CLCD controller interface
- 4 SPI/I2C control signals
- Digital-to-analog converter (DAC)
- TDM block capable of communicating with 2 external devices
- I2S block
- SDIO interface supporting SPI, SD1, SD4 and SD8 mode
- GPIOs with interrupt capability

Mode 6: Low end Wifi phone

Main features:

- 9x9 keyboard
- 8 SPI/I2C control signals
- Digital-to-analog converter (DAC)
- TDM block capable of communicating with 8 external devices
- I2S block
- SDIO interface supporting SPI, SD1, SD4 and SD8 mode
- GPIOs with interrupt capability

Mode 7: High end Wifi phone

Main features:

- 9x9 keyboard
- CLCD controller interface
- 4 SPI/I2C control signals
- Digital-to-analog converter (DAC)
- TDM block capable of communicating with 2 external devices
- I2S block
- SDIO interface supporting SPI, SD1, SD4 and SD8 mode
- GPIOs with interrupt capability

Mode 8: ATA PABX without I2S

Main features:

- 8 SPI/I2C control signals
- TDM block capable of communicating with 8 external devices
- SDIO interface supporting SPI, SD1 and SD4 mode
- External Memory Interface (8 data bits, 8 address bits and 4 control signals)
- GPIOs with interrupt capability

Mode 9: ATA PABX with I2S

Main features:

- NAND Flash interface (8 bits, 5 control signals)
- External Memory Interface (8 data bits, 8 address bits and 4 control signals)
- 8 SPI/I2C control signals
- Digital-to-analog converter (DAC)
- I2S block
- TDM block capable of communicating with 4 external devices
- SDIO interface supporting SPI, SD1 and SD4 mode
- GPIOs with interrupt capability

Mode 10: 8-bit camera without LCD

Main features:

- 8-bit camera interface
- 9x9 keyboard
- 4 SPI/I2C control signals
- Digital-to-analog converter (DAC)
- I2S block
- TDM block capable of communicating with 2 external devices
- SDIO interface supporting SPI, SD1, SD4 and SD8 mode
- GPIOs with interrupt capability

Mode 11: 14-bit camera with LCD

Main features:

- 14-bit camera interface
- 7x5 keyboard
- CLCD controller interface
- Digital-to-analog converter (DAC)
- I2S block
- TDM block capable of communicating with 2 external devices
- SDIO interface supporting SPI, SD1, SD4 and SD8 mode
- GPIOs with interrupt capability

Mode 12: 14-bit camera without LCD

Main features:

- 14-bit camera interface
- 7x5 keyboard
- Digital-to-analog converter (DAC)
- I2S block
- TDM block capable of communicating with 2 external devices
- SDIO interface supporting SPI, SD1, SD4 and SD8 mode
- GPIOs with interrupt capability

Mode 13: 8-bit camera with LCD

Main features:

- 8-bit camera interface
- 9x9 keyboard
- CLCD controller interface
- Digital-to-analog converter (DAC)
- I2S block
- 4 SPI/I2C control signals
- TDM block capable of communicating with 2 external devices
- SDIO interface supporting SPI, SD1, SD4 and SD8 mode
- GPIOs with interrupt capability

3.3.3 Alternate functions

Other peripheral functions are listed in the Alternate Functions column of *Table 11: PL_GPIO multiplexing scheme* and can be enabled/disabled using by via RAS register 1. Refer to the user manual for the register descriptions.

3.3.4 Boot pins

The status of the boot pins is read at startup by the BootROM. Refer to the description of the Boot register in the SPEAr300 user manual.

3.3.5 GPIOs

Some PL_GPIO pins can be used as software controlled general purpose I/Os (GPIOs) .

- 6 base GPIOs can be enabled as alternate functions on PL_GPIO.
- 18 GPIO are provided by the RAS IPs G8 and G10 on PL_GPIO.
- 18 GPIOs are available if the GPIO/ keyboard controller is configured in GPIO mode.

3.3.6 Multiplexing scheme

The two multiplexers shown in *Figure 4* are controlled by different registers. The first multiplexer selects the I/O functions of the RAS IPs in one of 13 modes shown in “Configuration mode” columns in *Table 11*). This selection is programmable via 4 bits in RAS register 2.

The second multiplexer is controlled by RAS register 1 and allows you to enable the I/O functions shown in alternate functions column of *Table 11*.

To get more information about these registers, please refer to the SPEAr300 user manual.

Figure 4. Multiplexing scheme

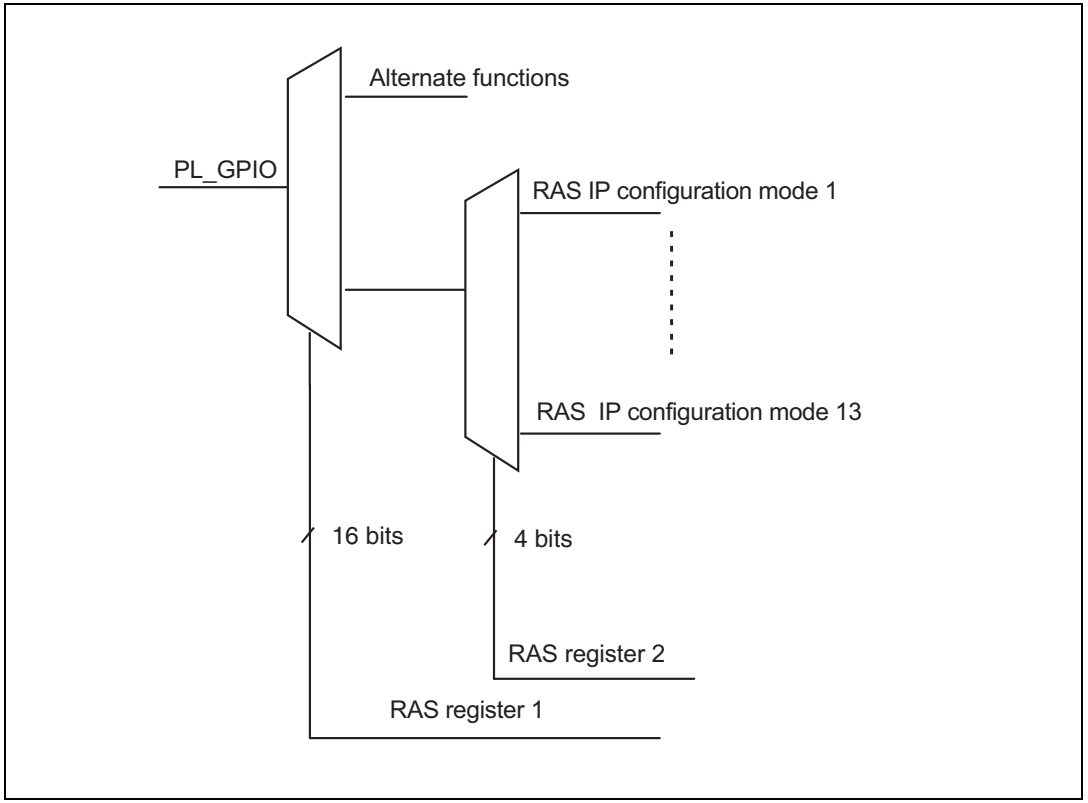

Table 10. Available peripherals in each configuration mode

Modes	FSMC	Boot pins	SPI/I2C Multi slave control	I2S	CLCD	DAC	Camera interface	TDM No of voice devices	SDIO/MMC data lines	Keyboard keys	GPIOs					
											Max. no. of I/Os	Bidirectional	Input only	Output only	Special outputs (sync)	Max. no. of I/Os with Interrupt
1	16-bit NAND	4									18	6	12			6
2	16-bit NOR	4									18	6	12			6
3	16-bit NAND				1			1	8		28	28				22
4			8	1		1		8	8	9*9	62	38	8	12	4	14
5			4	1	1	1		2	8	9*9	42	38		4		14
6			8	1		1		8	8	9*9	58	38	8	8	4	14
7			4	1	1	1		2	8	9*9	42	38		4		14
8	8-bit NOR		8					8	4		44	24	8	8	4	14
9	8-bit NAND /NOR		8	1		1		4	4		42	24	8	8	2	14
10			4	1		1	8-bit	2	8	9*9	36	32		4		10
11				1	1	1	14-bit	2	8	7*5	26	26				10
12				1		1	14-bit	2	8	7*5	26	26				10
13			4	1	1	1	8-bit	2	8	9*9	32	28		4		6

TDM interfacing using GPIOs

In some configuration modes where less than 8 TDM devices are indicated in *Table 10*, additional TDM devices can be supported by using GPIO pins. The TDM needs a dedicated interrupt line, an SPI and an independent frame sync signal to interface each device. When enough SPI chip selects signals are not available (SPI_I2C signals), the chip select can be performed by a GPIO. In this case the number of possible TDM devices supported is:

Modes 5, 7, 8 and 9: up to 8 devices

Modes 3 and 10: up to 6 devices

Modes 11 and 12: up to 4 devices

Table 11. PL_GPIO multiplexing scheme

PL_GPIO_# / ball number	Configuration mode (enabled by RAS register 2)													Alternate function (enabled by RAS register 1)
	1	2	3	4	5	6	7	8	9	10	11	12	13	
PL_GPIO_97/H16	/E1	/E1	/E1	1	1	1	1	/E1	/E1	1	1	1	1	
PL_GPIO_96/H15	D0	DQ0	D0	COL0	COL0	COL0	COL0	D0	D0	COL0	COL0	COL0	COL0	
PL_GPIO_95/H14	D1	DQ1	D1	COL1	COL1	COL1	COL1	D1	D1	COL1	COL1	COL1	COL1	
PL_GPIO_94/H13	D2	DQ2	D2	COL2	COL2	COL2	COL2	D2	D2	COL2	COL2	COL2	COL2	
PL_GPIO_93/G17	D3	DQ3	D3	COL3	COL3	COL3	COL3	D3	D3	COL3	COL3	COL3	COL3	
PL_GPIO_92/G16	D4	DQ4	D4	COL4	COL4	COL4	COL4	D4	D4	COL4	COL4	COL4	COL4	
PL_GPIO_91/G15	D5	DQ5	D5	COL5	COL5	COL5	COL5	D5	D5	COL5	DIO0_1	DIO0_1	COL5	
PL_GPIO_90/G14	D6	DQ6	D6	COL6	COL6	COL6	COL6	D6	D6	COL6	DIO1_1	DIO1_1	COL6	
PL_GPIO_89/F17	D7	DQ7	D7	COL7	COL7	COL7	COL7	D7	D7	COL7	DIO2_1	DIO2_1	COL7	
PL_GPIO_88/F16	D8	DQ8	D8	COL8	COL8	COL8	COL8	G8_0	G8_0	COL8	DIO3_1	DIO3_1	COL8	
PL_GPIO_87/G13	D9	DQ9	D9	ROW0	ROW0	ROW0	ROW0	G8_1	G8_1	ROW0	ROW0	ROW0	ROW0	
PL_GPIO_86/E17	D10	DQ10	D10	ROW1	ROW1	ROW1	ROW1	G8_2	G8_2	ROW1	ROW1	ROW1	ROW1	
PL_GPIO_85/F15	D11	DQ11	D11	ROW2	ROW2	ROW2	ROW2	G8_3	G8_3	ROW2	ROW2	ROW2	ROW2	
PL_GPIO_84/D17	D12	DQ12	D12	ROW3	ROW3	ROW3	ROW3	G8_4	G8_4	ROW3	ROW3	ROW3	ROW3	
PL_GPIO_83/E16	D13	DQ13	D13	ROW4	ROW4	ROW4	ROW4	G8_5	G8_5	ROW4	ROW4	ROW4	ROW4	
PL_GPIO_82/E15	D14	DQ14	D14	ROW5	ROW5	ROW5	ROW5	G8_6	G8_6	ROW5	ROW5	ROW5	ROW5	
PL_GPIO_81/C17	D15	DQ15 A-1	D15	ROW6	ROW6	ROW6	ROW6	G8_7	G8_7	ROW6	ROW6	ROW6	ROW6	
PL_GPIO_80/D16	0	A0	CLD0	G8_0 (out)	CLD0	0	CLD0	A0	A0	Reserved	CLD0	Reserved	CLD0	
PL_GPIO_79/F14	0	A1	CLD1	G8_1 (out)	CLD1	0	CLD1	A1	A1	Reserved	CLD1	Reserved	CLD1	
PL_GPIO_78/D15	0	A2	CLD2	G8_2 (out)	CLD2	0	CLD2	A2	A2	Reserved	CLD2	Reserved	CLD2	
PL_GPIO_77/B17	0	A3	CLD3	G8_3 (out)	CLD3	0	CLD3	A3	A3	Reserved	CLD3	Reserved	CLD3	
PL_GPIO_76/F13	0	A4	CLD4	G8_4(out)	CLD4	0	CLD4	A4	A4	Reserved	CLD4	Reserved	CLD4	
PL_GPIO_75/E14	0	A5	CLD5	G8_5 (out)	CLD5	0	CLD5	A5	A5	Reserved	CLD5	Reserved	CLD5	
PL_GPIO_74/C16	0	A6	CLD6	G8_6 (out)	CLD6	0	CLD6	A6	A6	Reserved	CLD6	Reserved	CLD6	

Table 11. PL_GPIO multiplexing scheme (continued)

PL_GPIO_# / ball number	Configuration mode (enabled by RAS register 2)													Alternate function (enabled by RAS register 1)
	1	2	3	4	5	6	7	8	9	10	11	12	13	
PL_GPIO_73/A17	0	A7	CLD7	G8_7 (out)	CLD7	0	CLD7	A7	A7	Reserved	CLD7	Reserved	CLD7	
PL_GPIO_72/B16	0	A8	CLD8	IT0	CLD8	IT0	CLD8	IT0	IT0	Reserved	CLD8	Reserved	CLD8	
PL_GPIO_71/D14	0	A9	CLD9	IT1	CLD9	IT1	CLD9	IT1	IT1	Reserved	CLD9	Reserved	CLD9	
PL_GPIO_70/C15	0	A10	CLD10	IT2	CLD10	IT2	CLD10	IT2	IT2	Reserved	CLD10	Reserved	CLD10	
PL_GPIO_69/A16	0	A11	CLD11	IT3	CLD11	IT3	CLD11	IT3	IT3	Reserved	CLD11	Reserved	CLD11	
PL_GPIO_68/B15	0	A12	CLD12	IT4	CLD12	IT4	CLD12	IT4	IT4	Reserved	CLD12	Reserved	CLD12	
PL_GPIO_67/C14	0	A13	CLD13	IT5	CLD13	IT5	CLD13	IT5	IT5	Reserved	CLD13	Reserved	CLD13	
PL_GPIO_66/E13	0	A14	CLD14	IT6	CLD14	IT6	CLD14	IT6	IT6	Reserved	CLD14	Reserved	CLD14	
PL_GPIO_65/B14	0	A15	CLD15	IT7	CLD15	IT7	CLD15	IT7	IT7	Reserved	CLD15	Reserved	CLD15	
PL_GPIO_64/D13	0	A16	CLD16	SPI_I2C4	CLD16	SPI_I2C4	CLD16	SPI_I2C4	SPI_I2C4	Reserved	CLD16	Reserved	CLD16	
PL_GPIO_63/C13	0	A17	CLD17	SPI_I2C5	CLD17	SPI_I2C5	CLD17	SPI_I2C5	SPI_I2C5	Reserved	CLD17	Reserved	CLD17	
PL_GPIO_62/A15	0	A18	CLD18	SPI_I2C6	CLD18	SPI_I2C6	CLD18	SPI_I2C6	SPI_I2C6	Reserved	CLD18	Reserved	CLD18	
PL_GPIO_61/E12	0	A19	CLD19	SPI_I2C7	CLD19	SPI_I2C7	CLD19	SPI_I2C7 /DOUT	SPI_I2C7 /DOUT	Reserved	CLD19	Reserved	CLD19	
PL_GPIO_60/A14	0	A20	CLD20	TDM_ SYNC4	CLD20	TDM_ SYNC4	CLD20	TDM_ SYNC4	TDM_ SYNC4	Reserved	CLD20	Reserved	CLD20	
PL_GPIO_59/B13	0	A21	CLD21	TDM_ SYNC5	CLD21	TDM_ SYNC5	CLD21	TDM_ SYNC5	TDM_ SYNC5	Reserved	CLD21	Reserved	CLD21	
PL_GPIO_58/D12	CL	A22	CL	TDM_ SYNC6	CLD22	TDM_ SYNC6	CLD22	TDM_ SYNC6	CL	Reserved	CLD22	Reserved	CLD22	
PL_GPIO_57/E11	AL	A23	AL	TDM_ SYNC7	CLD23	TDM_ SYNC7	CLD23	TDM_ SYNC7	AL	Reserved	CLD23	Reserved	CLD23	
PL_GPIO_56/C12	/W	/W	/W	ROW7	ROW7	ROW7	ROW7	/W	/W	ROW7	VSYNC_1	VSYNC_1	ROW7	
PL_GPIO_55/A13	/R	/G	/R	ROW8	ROW8	ROW8	ROW8	/R	/R	ROW8	HSYNC_1	HSYNC_1	ROW8	
PL_GPIO_54/E10	0	0	CLAC	G10_9	CLAC	G10_9	CLAC	G10_9	G10_9	G10_9	CLAC	G10_9	CLAC	
PL_GPIO_53/D11	0	0	CLCP	G10_8	CLCP	G10_8	CLCP	G10_8	G10_8	G10_8	CLCP	G10_8	CLCP	
PL_GPIO_52/B12	0	0	CLFP	G10_7	CLFP	G10_7	CLFP	G10_7	G10_7	G10_7	CLFP	G10_7	CLFP	

Table 11. PL_GPIO multiplexing scheme (continued)

PL_GPIO_# / ball number	Configuration mode (enabled by RAS register 2)													Alternate function (enabled by RAS register 1)
	1	2	3	4	5	6	7	8	9	10	11	12	13	
PL_GPIO_51/D10	0	0	CLLP	G10_6	CLLP	G10_6	CLLP	G10_6	G10_6	G10_6	CLLP	G10_6	CLLP	
PL_GPIO_50/A12	0	0	CLLE	G10_5	CLLE	G10_5	CLLE	G10_5	G10_5	G10_5	CLLE	G10_5	CLLE	TMR_CPTR4
PL_GPIO_49/C11	0	0	CLPP	G10_4	CLPP	G10_4	CLPP	G10_4	G10_4	G10_4	CLPP	G10_4	CLPP	TMR_CPTR3
PL_GPIO_48/B11	B0	B0	CLD22	SPI_I2C0	SPI_I2C0	SPI_I2C0	SPI_I2C0	SPI_I2C0	SPI_I2C0	SPI_I2C0	DIO4_1	DIO4_1	SPI_I2C0	TMR_CPTR2
PL_GPIO_47/C10	B1	B1	CLD23	SPI_I2C1	SPI_I2C1	SPI_I2C1	SPI_I2C1	SPI_I2C1	SPI_I2C1	SPI_I2C1	DIO5_1	DIO5_1	SPI_I2C1	TMR_CPTR1
PL_GPIO_46/A11	B2	B2	GPIO7	SPI_I2C2	SPI_I2C2	SPI_I2C2	SPI_I2C2	SPI_I2C2	SPI_I2C2	SPI_I2C2	DIO6_1	DIO6_1	SPI_I2C2	TMR_CLK4
PL_GPIO_45/B10	B3	B3	GPIO6	SPI_I2C3	SPI_I2C3	SPI_I2C3	SPI_I2C3	SPI_I2C3	SPI_I2C3	SPI_I2C3	DIO7_1	DIO7_1	SPI_I2C3	TMR_CLK3
PL_GPIO_44/A10	H0	H0	GPIO5	G10_3/ DAC_O0	G10_3/ DAC_O0	G10_3/ DAC_O0	G10_3/ DAC_O0	G10_3	DAC_O0	DAC_O0	DAC_O0	DAC_O0	DAC_O0	TMR_CLK2
PL_GPIO_43/E9	H1	H1	GPIO4	G10_2/ DAC_O1	G10_2/ DAC_O1	G10_2/ DAC_O1	G10_2/ DAC_O1	G10_2	DAC_O1	DAC_O1	DAC_O1	DAC_O1	DAC_O1	TMR_CLK1
PL_GPIO_42/D9	H2	H2	GPIO3	I2S_DIN	I2S_DIN	I2S_DIN	I2S_DIN	G10_1	I2S_DIN	I2S_DIN	I2S_DIN	I2S_DIN	I2S_DIN	UART_DTR
PL_GPIO_41/C9	H3	H3	GPIO2	I2S_ LRCK	I2S_ LRCK	I2S_ LRCK	I2S_ LRCK	G10_0	I2S_LRC K	I2S_LRCK	I2S_LRCK	I2S_LRCK	I2S_LRCK	UART_RI
PL_GPIO_40/B9	H4	H4	GPIO1	I2S_CLK	I2S_CLK	I2S_CLK	I2S_CLK	TDM_SY NC3	I2S_CLK	I2S_CLK	I2S_CLK	I2S_CLK	I2S_CLK	UART_DSR
PL_GPIO_39/A9	H5	H5	GPIO0	I2S_ DOUT	I2S_ DOUT	I2S_ DOUT	I2S_ DOUT	TDM_SY NC2	DOUT	I2S_DOUT	I2S_DOUT	I2S_DOUT	I2S_DOUT	UART_DCD
PL_GPIO_38/A8	H6	H6	TDM_ SYNC1	TDM_ SYNC1	TDM_ SYNC1	TDM_ SYNC1	TDM_ SYNC1	TDM_ SYNC1	TDM_ SYNC1	TDM_ SYNC1	TDM_ SYNC1	TDM_ SYNC1	TDM_ SYNC1	UART_CTS
PL_GPIO_37/B8	H7	H7	TDM_ DOUT	TDM_ DOUT	TDM_ DOUT	TDM_ DOUT	TDM_ DOUT	TDM_ DOUT	TDM_ DOUT	TDM_ DOUT	TDM_ DOUT	TDM_ DOUT	TDM_ DOUT	UART_RTS
PL_GPIO_36/C8	0	0	TDM_ SYNC0	TDM_ SYNC0	TDM_ SYNC0	TDM_ SYNC0	TDM_ SYNC0	TDM_ SYNC0	TDM_ SYNC0	TDM_ SYNC0	TDM_ SYNC0	TDM_ SYNC0	TDM_ SYNC0	SSP_CS4
PL_GPIO_35/D8	Reserved	Reserved	TDM_CLK	TDM_CLK	TDM_CLK	TDM_CLK	TDM_CLK	TDM_CLK	TDM_CLK	TDM_CLK	TDM_CLK	TDM_CLK	TDM_CLK	SSP_CS3
PL_GPIO_34/E8	0	0	TDM_DIN	TDM_DIN	TDM_DIN	TDM_DIN	TDM_DIN	TDM_DIN	TDM_DIN	TDM_DIN	TDM_DIN	TDM_DIN	TDM_DIN	SSP_CS2
PL_GPIO_33/E7	0	0	SD_CMD	SD_CMD	SD_CMD	SD_CMD	SD_CMD	SD_CMD	SD_CMD	SD_CMD	SD_CMD	SD_CMD	SD_CMD	BasGPIO5
PL_GPIO_32/D7	0	0	SD_CLK	SD_CLK	SD_CLK	SD_CLK	SD_CLK	SD_CLK	SD_CLK	SD_CLK	SD_CLK	SD_CLK	SD_CLK	BasGPIO4
PL_GPIO_31/C7	0	0	SD_DAT0	SD_DAT0	SD_DAT0	SD_DAT0	SD_DAT0	SD_DAT0	SD_DAT0	SD_DAT0	SD_DAT0	SD_DAT0	SD_DAT0	BasGPIO3

Table 11. PL_GPIO multiplexing scheme (continued)

PL_GPIO_# / ball number	Configuration mode (enabled by RAS register 2)													Alternate function (enabled by RAS register 1)
	1	2	3	4	5	6	7	8	9	10	11	12	13	
PL_GPIO_30/B7	0	0	SD_DAT1	SD_DAT1	SD_DAT1	SD_DAT1	SD_DAT1	SD_DAT1	SD_DAT1	SD_DAT1	SD_DAT1	SD_DAT1	SD_DAT1	BasGPIO2
PL_GPIO_29/A7	0	0	SD_DAT2	SD_DAT2	SD_DAT2	SD_DAT2	SD_DAT2	SD_DAT2	SD_DAT2	SD_DAT2	SD_DAT2	SD_DAT2	SD_DAT2	BasGPIO1
PL_GPIO_28/A6	0	0	SD_SDAT3	SD_SDAT3	SD_SDAT3	SD_SDAT3	SD_SDAT3	SD_SDAT3	SD_SDAT3	SD_SDAT3	SD_SDAT3	SD_SDAT3	SD_SDAT3	BasGPIO0
PL_GPIO_27/B6	0	0	SD_SDAT4	SD_SDAT4	SD_SDAT4	SD_SDAT4	SD_SDAT4	G8_0	G8_0	SD_SDAT4	SD_SDAT4	SD_SDAT4	SD_SDAT4	MII_TX_CLK
PL_GPIO_26/A5	0	0	SD_SDAT5	SD_SDAT5	SD_SDAT5	SD_SDAT5	SD_SDAT5	G8_1	G8_1	SD_SDAT5	SD_SDAT5	SD_SDAT5	SD_SDAT5	MII_TXD0
PL_GPIO_25/C6	0	0	SD_SDAT6	SD_SDAT6	SD_SDAT6	SD_SDAT6	SD_SDAT6	G8_2	G8_2	SD_SDAT6	SD_SDAT6	SD_SDAT6	SD_SDAT6	MII_TXD1
PL_GPIO_24/B5	0	0	SD_SDAT7	SD_SDAT7	SD_SDAT7	SD_SDAT7	SD_SDAT7	G8_3	G8_3	SD_SDAT7	SD_SDAT7	SD_SDAT7	SD_SDAT7	MII_TXD2
PL_GPIO_23/A4	0	0	G8_4	G8_4	G8_4	G8_4	G8_4	G8_4	G8_4	G8_4	G8_4	G8_4	G8_4	MII_TXD3
PL_GPIO_22/D6	0	0	G8_5	G8_5	G8_5	G8_5	G8_5	G8_5	G8_5	G8_5	G8_5	G8_5	G8_5	MII_TX_EN
PL_GPIO_21/C5	0	0	G8_6	G8_6	G8_6	G8_6	G8_6	G8_6	G8_6	DIO7	DIO8_1	DIO8_1	DIO7	MII_TX_ER
PL_GPIO_20/B4	0	0	G8_7	G8_7	G8_7	G8_7	G8_7	G8_7	G8_7	DIO6	DIO9_1	DIO9_1	DIO6	MII_RX_CLK
PL_GPIO_19/A3	0	0	G10_0	G10_0	G10_0	G10_0	G10_0	G10_0	G10_0	DIO5	DIO10_1	DIO10_1	DIO5	MII_RX_DV
PL_GPIO_18/D5	0	0	G10_1	G10_1	G10_1	G10_1	G10_1	G10_1	G10_1	DIO4	DIO11_1	DIO11_1	DIO4	MII_RX_ERR
PL_GPIO_17/C4	0	0	G10_2	G10_2	G10_2	G10_2	G10_2	G10_2	G10_2	DIO3	DIO12_1	DIO12_1	DIO3	MII_RXD0
PL_GPIO_16/E6	0	0	G10_3	G10_3	G10_3	G10_3	G10_3	G10_3	G10_3	DIO2	DIO13_1	DIO13_1	DIO2	MII_RXD1
PL_GPIO_15/B3	0	0	G10_4	G10_4	G10_4	G10_4	G10_4	G10_4	G10_4	DIO1	G10_4	G10_4	DIO1	MII_RXD2
PL_GPIO_14/A2	0	0	G10_5	G10_5	G10_5	G10_5	G10_5	G10_5	G10_5	DIO0	G10_5	G10_5	DIO0	MII_RXD3
PL_GPIO_13/A1	0	0	G10_6	G10_6	G10_6	G10_6	G10_6	G10_6	G10_6	VSYNC	G10_6	G10_6	VSYNC	MII_COL
PL_GPIO_12/D4	0	0	G10_7	G10_7	G10_7	G10_7	G10_7	G10_7	G10_7	HSYNC	G10_7	G10_7	HSYNC	MII_CRS
PL_GPIO_11/E5	0	0	G10_8	G10_8	G10_8	G10_8	G10_8	G10_8	G10_8	G10_8	G10_8	G10_8	G10_8	MII_MDC
PL_GPIO_10/C3	0	0	G10_9	G10_9	G10_9	G10_9	G10_9	G10_9	G10_9	G10_9	G10_9	G10_9	G10_9	MII_MDIO
PL_GPIO_9/B2	0	0	SD_CD	SD_CD	SD_CD	SD_CD	SD_CD	SD_CD	SD_CD	SD_CD	SD_CD	SD_CD	SD_CD	SSP_MOSI

Table 11. PL_GPIO multiplexing scheme (continued)

PL_GPIO_# / ball number	Configuration mode (enabled by RAS register 2)													Alternate function (enabled by RAS register 1)
	1	2	3	4	5	6	7	8	9	10	11	12	13	
PL_GPIO_8/C2	0	0	SD_WP	SD_WP	SD_WP	SD_WP	SD_WP	SD_WP	SD_WP	SD_WP	SD_WP	SD_WP	SD_WP	SSP_SCLK
PL_GPIO_7/D3	0	0	0	0	0	0	0	0	0	0	0	0	0	SSP_SS
PL_GPIO_6/B1	0	0	SD_LED	SD_LED	SD_LED	SD_LED	SD_LED	SD_LED	SD_LED	SD_LED	SD_LED	SD_LED	SD_LED	SSP_MISO
PL_GPIO_5/D2	0	0	0	0	0	0	0	0	0	0	0	0	0	I2C_SDA
PL_GPIO_4/C1	0	0	0	0	0	0	0	0	0	0	0	0	0	I2C_SCL
PL_GPIO_3/D1	/E4	/E4	/E4	1	1	1	1	1	1	1	1	1	1	UART_RX
PL_GPIO_2/E4	/E3	/E3	/E3	1	1	1	1	1	1	1	1	1	1	UART_TX
PL_GPIO_1/E3	/E2	/E2	/E2	1	1	1	1	1	1	1	1	1	1	IrDA_RX
PL_GPIO_0/F3	R/B	R/B	R/B	1	1	1	1	R/B	R/B	1	1	1	1	IrDA_TX
PL_CK1/K17	TCLK*	TCLK*	CCLK/ TCLK*	TCLK*	CCLK/TC LK*	TCLK*	CCLK/ TCLK*	TCLK*	TCLK*	TCLK*	CCLK/ TCLK*	TCLK*	CCLK/ TCLK*	PL_CLK1
Pl_CK2/J17	Reserved	Reserved	int_CLK	int_CLK	int_CLK	int_CLK	int_CLK	int_CLK	int_CLK	int_CLK	int_CLK	int_CLK	int_CLK	PL_CLK2
PL_CK3/J16	Reserved	Reserved	\int_CLK	\int_CLK	\int_CLK	\int_CLK	\int_CLK	\int_CLK	\int_CLK	CLK	CLK	CLK	CLK	PL_CLK3
PL_CK4/H17	Reserved	Reserved	2.048 MHz	2.048 MHz	2.048 MHz	2.048 MHz	2.048 MHz	2.048 MHz	2.048 MHz	PCLK	PCLK	PCLK	PCLK	PL_CLK4

Notes/legend for *Table 11*:

GPIO (General purpose I/O):

basGPIO: Base GPIOs in the basic subsystem (enabled as alternate functions)

G10 and G8: GPIOs in the RAS subsystem

GPIOx: GPIOs in the independent GPIO block in the RAS subsystem

TDM_ : TDM interface signals

SD_ : SDIO interface

IT pins: interrupts

Table cells filled with ‘0’ or ‘1’ are unused and unless otherwise configured as Alternate function or GPIO, the corresponding pin is held at low or high level respectively by the internal logic.

Table cells filled with ‘Reserved’ denote pins that must be left unconnected.

Table 12. Table shading

Shading	Pin group
FSMC	FSMC pins: NAND or NOR Flash
Keyboard	Keyboard pins ROWs are outputs, COLs are inputs
CLCD	Color LCD controller pins
CAMERA	Camera pins
UART	UART pins
Ethernet MAC	MII/SMII Ethernet Mac pins
SDIO/MMC	SD card controller pins
GPT	Timer pins
IrDa	IrDa pins
SSP	SSP pins
I2C	I2C pins

3.4 PL_GPIO pin sharing for debug modes

In some cases the PL_GPIO pins may be used in different ways for debugging purposes. There are three different cases (see also *Table 13*):

1. Case 1 - All the PL_GPIO get values from Boundary scan registers during Ex-test instruction of JTAG . Typically this configuration is used to verify correctness of the soldering process during the production flow .
2. Case 2 - All the PL_GPIO maintain their original meaning but the JTAG Interface is connected to the processor. This configuration is useful during the development phase but offers only "static" debug.
3. Case 3 - Some PL_GPIO, as shown in *Table 13: Ball sharing during debug*, are used to connect the ETM9 lines to an external box. This configuration is typically used only during the development phase. It offers a very powerful debug capability. When the processor reaches a breakpoint it is possible, by analyzing the trace buffer, to understand the reason why the processor has reached the break.

Table 13. Ball sharing during debug

Signal	Case 1 - Board Debug	Case 2 - Static Debug	Case 3 - Full Debug
Test[0]	0	1	0
Test[1]	0	0	1
Test[2]	0	0/1	0/1
Test[3]	0	0/1	0/1
Test[4]	1	0	0
nTRST	nTRST_bscan	nTRST_ARM	nTRST_ARM
TCK	TCK_bscan	TCK_ARM	TCK_ARM
TMS	TSM_bscan	TMS_ARM	TSM_ARM
TDI	TDI_bscan	TDI_ARM	TDI_ARM
TDO	TDO_bscan	TDO_ARM	TDO_ARM
PL_GPIO[97]	BSR Value	Functional I/O	ARM_TRACE_CLK
PL_GPIO[96]	BSR Value	Functional I/O	ARM_TRACE_PKTA[0]
PL_GPIO[95]	BSR Value	Functional I/O	ARM_TRACE_PKTA[1]
PL_GPIO[94]	BSR Value	Functional I/O	ARM_TRACE_PKTA[2]
PL_GPIO[93]	BSR Value	Functional I/O	ARM_TRACE_PKTA[3]
PL_GPIO[92]	BSR Value	Functional I/O	ARM_TRACE_PKTB[0]
PL_GPIO[91]	BSR Value	Functional I/O	ARM_TRACE_PKTB[1]
PL_GPIO[90]	BSR Value	Functional I/O	ARM_TRACE_PKTB[2]
PL_GPIO[89]	BSR Value	Functional I/O	ARM_TRACE_PKTB[3]
PL_GPIO[88]	BSR Value	Functional I/O	ARM_TRACE_SYNCA
PL_GPIO[87]	BSR Value	Functional I/O	ARM_TRACE_SYNCB
PL_GPIO[86]	BSR Value	Functional I/O	ARM_PIPESTATA[0]
PL_GPIO[85]	BSR Value	Functional I/O	ARM_PIPESTATA[1]
PL_GPIO[84]	BSR Value	Functional I/O	ARM_PIPESTATA[2]
PL_GPIO[83]	BSR Value	Functional I/O	ARM_PIPESTATB[0]
PL_GPIO[82]	BSR Value	Functional I/O	ARM_PIPESTATB[1]
PL_GPIO[81]	BSR Value	Functional I/O	ARM_PIPESTATB[2]
PL_GPIO[80]	BSR Value	Functional I/O	ARM_TRACE_PKTA[4]
PL_GPIO[79]	BSR Value	Functional I/O	ARM_TRACE_PKTA[5]
PL_GPIO[78]	BSR Value	Functional I/O	ARM_TRACE_PKTA[6]
PL_GPIO[77]	BSR Value	Functional I/O	ARM_TRACE_PKTA[7]
PL_GPIO[76]	BSR Value	Functional I/O	ARM_TRACE_PKTB[4]
PL_GPIO[75]	BSR Value	Functional I/O	ARM_TRACE_PKTB[5]
PL_GPIO[74]	BSR Value	Functional I/O	ARM_TRACE_PKTB[6]

Table 13. Ball sharing during debug (continued)

Signal	Case 1 - Board Debug	Case 2 - Static Debug	Case 3 - Full Debug
PL_GPIO[73]	BSR Value	Functional I/O	ARM_TRACE_PKTB[7]
PL_GPIO[72:0]			

4 Memory mapping

Table 14. Memory mapping

Start address	End address	Peripheral	Description
0x0000.0000	0x3FFF.FFFF	External DRAM	Low power DDR or DDR2
0x4000.0000	0x4FFF.FFFF	C3	
0x5000.0000	0x5000.FFFF	Telecom register	
0x5001.0000	0x5001.0FFF	TDM	Action memory
0x5003.0000	0x5003.7FFF	TDM	Buffer memory
0x5004.0000	0x5004.0FFF	TDM	Sync memory
0x5005.0000	0x5005.0FFF	I2S	I2S memory bank 1
0x5005.1000	0x5005.1FFF	I2S	I2S memory bank 2
0x6000.0000	0x6FFF.FFFF	CLCD	
0x7000.0000	0x7FFF.FFFF	SDIO	
0x8000.0000	0x83FF.FFFF	Static memory controller	NAND bank0
0x8400.0000	0x87FF.FFFF	Static memory controller	NAND bank1
0x8800.0000	0x8BFF.FFFF	Static memory controller	NAND bank2
0x8C00.0000	0x8FFF.FFFF	Static memory controller	NAND bank3
0x9000.0000	0x90FF.FFFF	Static memory controller	NOR bank0
0x9100.0000	0x91FF.FFFF	Static memory controller	NOR bank1
0x9200.0000	0x91FF.FFFF	Static memory controller	NOR bank2
0x9300.0000	0x93FF.FFFF	Static memory controller	NOR bank3
0x9400.0000	0x98FF.FFFF	Static memory controller	Register
0x9900.0000	0x9FFF.FFFF	Registers	
0xA000.0000	0xA8FF.FFFF	Keyboard	
0xA900.0000	0xAFFF.FFFF	GPIO	
0xB000.0000	0xBFFF.FFFF	-	Reserved
0xC000.0000	0xCFFF.FFFF	-	Reserved
0xD000.0000	0xD007.FFFF	UART	
0xD008.0000	0xD00F.FFFF	ADC	
0xD010.0000	0xD017.FFFF	SPI	
0xD018.0000	0xD01F.FFFF	I2C	
0xD020.0000	0xD07F.FFFF	-	Reserved
0xD080.0000	0xD0FF.FFFF	JPEG CODEC	
0xD100.0000	0xD17F.FFFF	IrDA	
0xD180.0000	0xD1FF.FFFF	-	Reserved

Table 14. Memory mapping (continued)

Start address	End address	Peripheral	Description
0xD280.0000	0xD2FF.FFFF	SRAM	Static RAM shared memory (57 Kbytes)
0xD300.0000	0xE07F.FFFF	-	Reserved
0xE0800.0000	0xE0FF.FFFF	Ethernet controller	MAC
0xE100.0000	0xE10F.FFFF	USB 2.0 device	FIFO
0xE110.0000	0xE11F.FFFF	USB 2.0 device	Configuration registers
0xE120.0000	0xE12F.FFFF	USB 2.0 device	Plug detect
0xE130.0000	0xE17F.FFFF	-	Reserved
0xE180.0000	0xE18F.FFFF	USB2.0 EHCI 0-1	
0xE190.0000	0xE19F.FFFF	USB2.0 OHCI 0	
0xE1A0.0000	0xE20F.FFFF	-	Reserved
0xE210.0000	0xE21F.FFFF	USB2.0 OHCI 1	
0xE220.0000	0xE27F.FFFF	-	Reserved
0xE280.0000	0xE28F.FFFF	ML USB ARB	Configuration register
0xE290.0000	0xE7FF.FFFF	-	Reserved
0xE800.0000	0xEFFF.FFFF	-	Reserved
0xF000.0000	0xF00F.FFFF	Timer	
0xF010.0000	0xF10F.FFFF	-	Reserved
0xF110.0000	0xF11F.FFFF	VIC	
0xF120.0000	0xF7FF.FFFF	-	Reserved
0xF800.0000	0xFBFF.FFFF	Serial Flash memory	
0xFC00.0000	0xFC1F.FFFF	Serial Flash controller	
0xFC20.0000	0xFC3F.FFFF	-	Reserved
0xFC40.0000	0xFC5F.FFFF	DMA controller	
0xFC60.0000	0xFC7F.FFFF	DRAM controller	
0xFC80.0000	0xFC87.FFFF	Timer 1	
0xFC88.0000	0xFC8F.FFFF	Watchdog timer	
0xFC90.0000	0xFC97.FFFF	Real-time clock	
0xFC98.0000	0xFC9F.FFFF	General purpose I/O	
0xFCA0.0000	0xFCA7.FFFF	System controller	
0xFCA8.0000	0xFCAF.FFFF	Miscellaneous registers	
0xFCB0.0000	0xFCB7.FFFF	Timer 2	
0xFCB8.0000	0xFCFF.FFFF	-	Reserved
0xFD00.0000	0xFEFF.FFFF	-	Reserved
0xFF00.0000	0xFFFF.FFFF	Internal ROM	Boot

5 Electrical characteristics

5.1 Absolute maximum ratings

This product contains devices to protect the inputs against damage due to high/low static voltages. However it is advisable to take normal precaution to avoid application of any voltage higher/lower than the specified maximum/minimum rated voltages.

The absolute maximum rating is the maximum stress that can be applied to a device without causing permanent damage. However, extended exposure to minimum/maximum ratings may affect long-term device reliability.

Table 15. Absolute maximum ratings

Symbol	Parameter	Minimum value	Maximum value	Unit
V_{DD} 1.2	Supply voltage for the core	- 0.3	1.44	V
V_{DD} 3.3	Supply voltage for the I/Os	- 0.3	3.9	V
V_{DD} 2.5	Supply voltage for the analog blocks	- 0.3	3	V
V_{DD} 1.8	Supply voltage for the DRAM interface	- 0.3	2.16	V
V_{DD} RTC	RTC supply voltage	-0.3	2.16	V
T_{STG}	Storage temperature	-55	150	°C
T_J	Junction temperature	-40	125	°C

5.2 Maximum power consumption

Note: These values take into consideration the worst cases of process variation and voltage range and must be used to design the power supply section of the board.

Table 16. Maximum power consumption

Symbol	Description	Max	Unit
V_{DD} 1.2	Supply voltage for the core	420	mA
V_{DD} 1.8	Supply voltage for the DRAM interface (1)	160	mA
V_{DD} RTC	RTC supply voltage	8	µA
V_{DD} 2.5	Supply voltage for the analog blocks	35	mA
V_{DD} 3.3	Supply voltage for the I/Os (2)	15	mA
P_D	Maximum power consumption	930(3)	mW

1. Peak current with Linux memory test (50% write and 50% read) plus DMA reading memory.
2. With 30 logic channels connected to the device and simultaneously switching at 10 MHz.

3. The maximum current and power values listed above, obtained with typical supply voltages, are not guaranteed to be the highest obtainable. These values are dependent on many factors including the type of applications running, clock rates, use of internal functional capabilities, external interface usage, case temperature, and the power supply voltages. Your specific application can produce significantly different results.

   1.2 V current and power are primarily dependent on the applications running and the use of internal chip functions (DMA, USB, Ethernet, and so on).

   3.3 V current and power are primarily dependent on the capacitive loading, frequency, and utilization of the external buses.

5.3 DC electrical characteristics

The recommended operating conditions are listed in the following table:

Table 17. Recommended operating conditions

Symbol	Parameter	Min	Typ	Max	Unit
V_{DD} 1.2	Supply voltage for the core	1.14	1.2	1.3	V
V_{DD} 3.3	Supply voltage for the I/Os	3	3.3	3.6	V
V_{DD} 2.5	Supply voltage for the analog blocks	2.25	2.5	2.75	V
V_{DD} 1.8	Supply voltage for DRAM interface	1.70	1.8	1.9	V
V_{DD} RTC	RTC supply voltage	1.3	1.5	1.8	V
T_C	Case temperature	-40		85	°C

5.4 Overshoot and undershoot

This product can support the following values of overshoot and undershoot.

Table 18. Overshoot and undershoot specifications

Parameter	3V3 I/Os	2V5 I/Os	1V8 I/Os
Amplitude	500 mV	500 mV	500 mV
Ratio of overshoot (or undershoot) duration with respect to pulse width	1/3	1/3	1/3

If the amplitude of the overshoot/undershoot increases (decreases), the ratio of overshoot/undershoot width to the pulse width decreases (increases). The formula relating the two is:

Amplitude of OS/US = 0.75*(1- ratio of OS (or US) duration with respect to pulse width)

Note: The value of overshoot/undershoot should not exceed the value of 0.5 V. However, the duration of the overshoot/undershoot can be increased by decreasing its amplitude.

5.5 3.3V I/O characteristics

The 3.3 V I/Os are compliant with JEDEC standard JESD8b

Table 19. Low voltage TTL DC input specification (3 V< V_{DD} <3.6 V)

Symbol	Parameter	Min	Max	Unit
V_{IL}	Low level input voltage		0.8	V
V_{IH}	High level input voltage	2		V
V_{hyst}	Schmitt trigger hysteresis	300	800	mV

Table 20. Low voltage TTL DC output specification (3 V< V_{DD} <3.6 V)

Symbol	Parameter	Test condition	Min	Max	Unit
V_{OL}	Low level output voltage	I_{OL}= X mA (1)		0.3	V
V_{OH}	High level output voltage	I_{OH}= -X mA (1)	V_{DD} - 0.3		V

1. For the max current value (X mA) refer to *Section 2.29: 8-channel ADC*.

Table 21. Pull-up and pull-down characteristics

Symbol	Parameter	Test condition	Min	Max	Unit
R_{PU}	Equivalent pull-up resistance	V_I = 0 V	29	67	kΩ
R_{PD}	Equivalent pull-down resistance	V_I = V_{DDE}3V3	29	103	kΩ

5.6 LPDDR and DDR2 pin characteristics

Table 22. DC characteristics

Symbol	Parameter	Test condition	Min	Max	Unit
V_{IL}	Low level input voltage	SSTL2	-0.3	V_{REF}-0.15	V
		SSTL18	-0.3	V_{REF}-0.125	V
V_{IH}	High level input voltage	SSTL2	V_{REF}+0.15	V_{DDE}2V5+0.3	V
		SSTL18	V_{REF}+0.125	V_{DDE}1V8+0.3	V
V_{hyst}	Input voltage hysteresis		200		mV

Table 23. Driver characteristics

Symbol	Parameter	Min	Typ	Max	Unit
R_O	Output impedance (strong value)	40.5	45	49.5	Ω
	Output impedance (weak value)	44.1	49	53.9	Ω

Table 24. On die termination

Symbol	Parameter	Min	Typ	Max	Unit
RT1*	Termination value of resistance for on die termination		75		Ω
RT2*	Termination value of resistance for on die termination		150		Ω

Table 25. Reference voltage

Symbol	Parameter	Min	Typ	Max	Unit
V_{REFIN}	Voltage applied to core/pad	0.49 * V_{DDE}	0.500 * V_{DDE}	0.51 * V_{DDE}	V

5.7 Power up sequence

It is recommended to power up the power supplies in the order shown in *Figure 5*. V_{DD} 1.2 is brought up first, followed by V_{DD} 1.8, then V_{DD} 2.5 and finally V_{DD} 3.3.

Figure 5. Power-up sequence

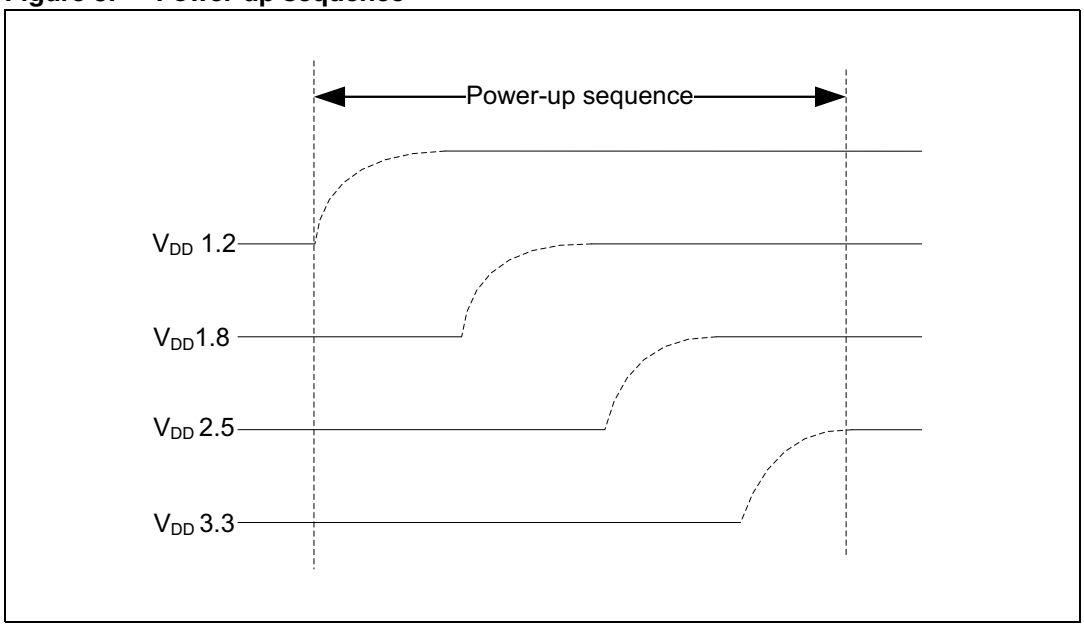

5.8 Removing power supplies for power saving

It is recommended to remove the the power supplies in the order shown in *Figure 6*. So V_{DD} 3.3 supply is to be removed first, then the V_{DD} 2.5 supply, followed by the V_{DD} 1.8 supply and last the V_{DD} 1.2.

Figure 6. Power-down sequence

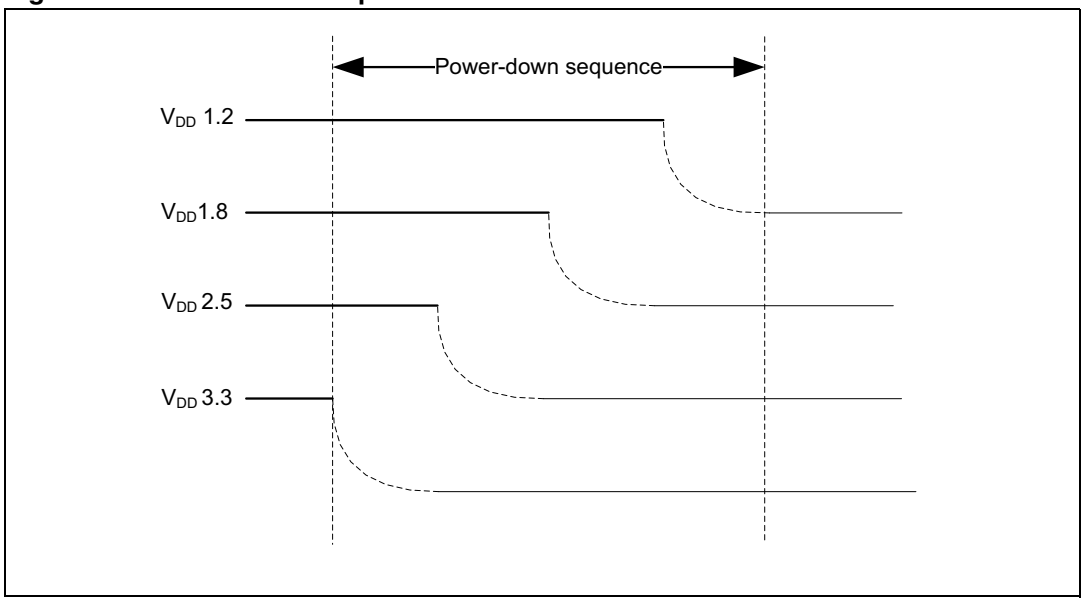

5.9 Power on reset (MRESET)

The MRESET must remain active for at least 10 ms after all the power supplies are in the correct range and should become active in no more than 10 µs when one of the power supplies goes out of the correct range.

6 Timing requirements

6.1 DDR2 timing characteristics

The characterization timing is done considering an output load of 10 pF on all the DDR pads. The operating conditions are in worst case V = 0.90 V T_A = 125° C and in best case V=1.10 V T_A = 40° C.

6.1.1 DDR2 read cycle timings

Figure 7. DDR2 Read cycle waveforms

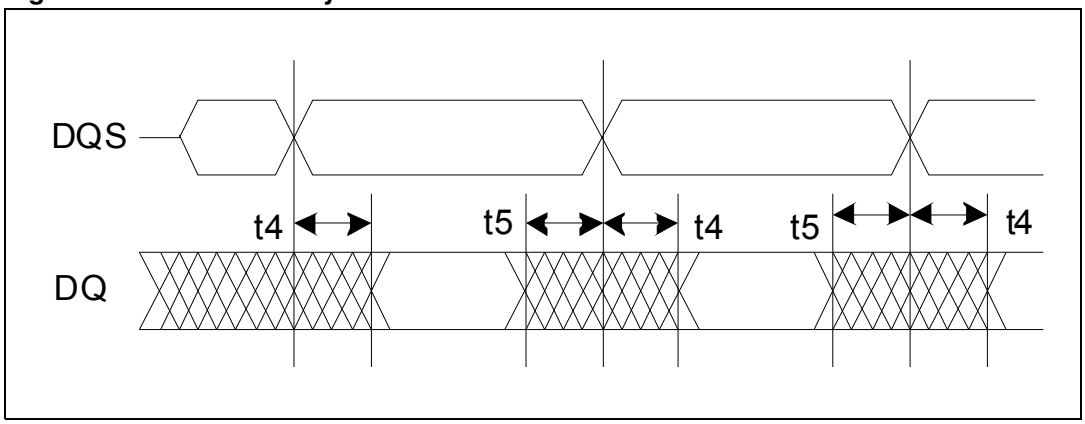

Figure 8. DDR2 Read cycle path

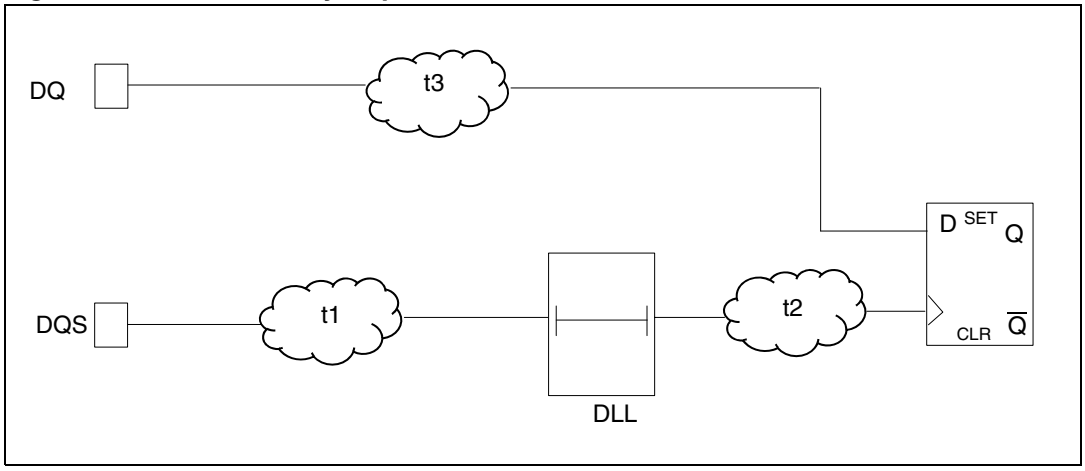

Table 26. DDR2 Read cycle timings

Frequency	t4 max	t5 max
333 MHz	1.24 ns	-495 ps
266 MHz	1.43 ns	-306 ps
200 MHz	1.74 ns	4 ps

Table 26. DDR2 Read cycle timings (continued)

Frequency	t4 max	t5 max
166 MHz	2.00 ns	260 ps
133 MHz	2.37 ns	634 ps

6.1.2 DDR2 write cycle timings

Figure 9. DDR2 Write cycle waveforms

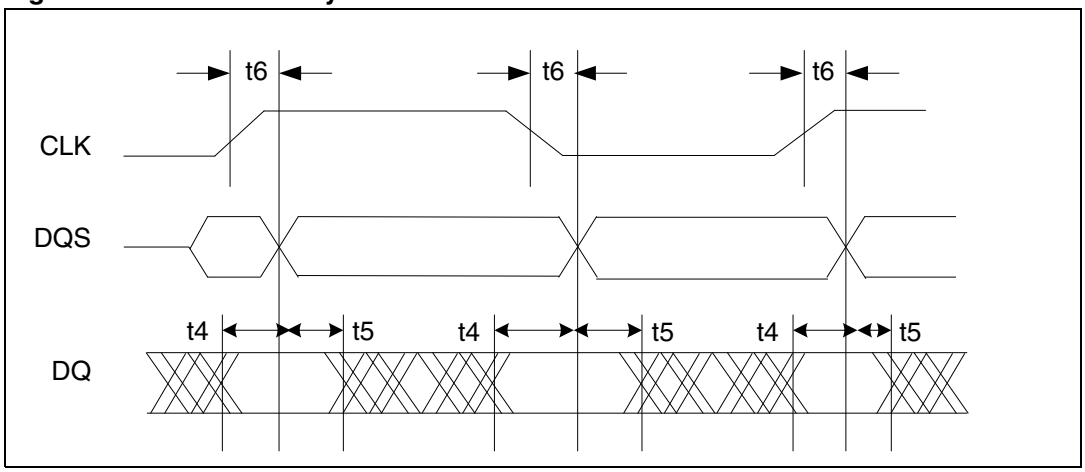

Figure 10. DDR2 Write cycle path

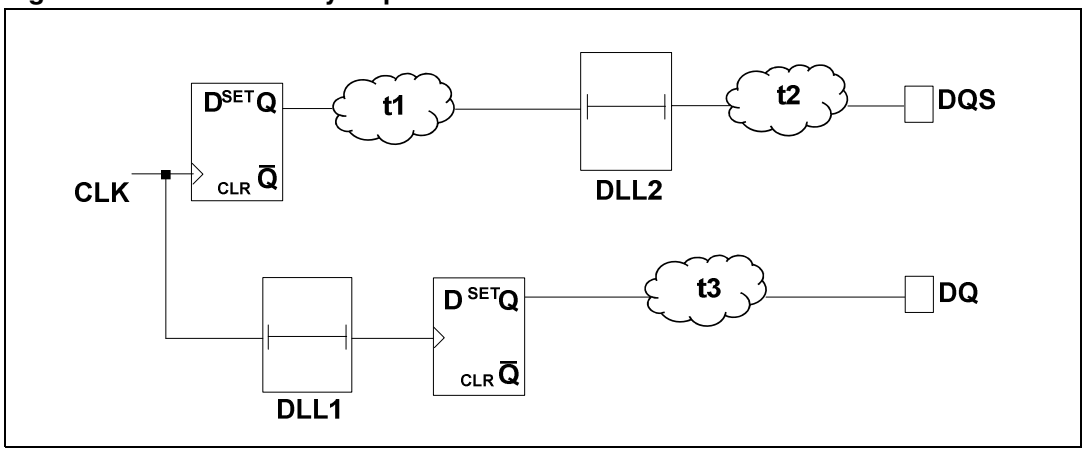

Table 27. DDR2 Write cycle timings

Frequency	t4 max	t5 max	Unit
333 MHz	1.36	-1.55	ns
266 MHz	1.55	-1.36	ns
200 MHz	1.86	-1.05	ns
166 MHz	2.11	- 794	ns
133 MHz	2.49	-420	ns

6.1.3 DDR2 command timings

Figure 11. DDR2 Command waveforms

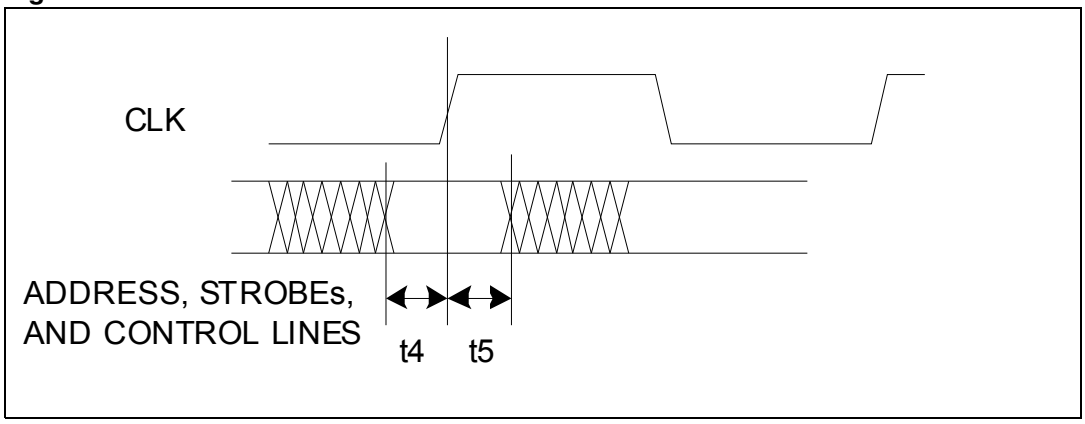

Figure 12. DDR2 Command path

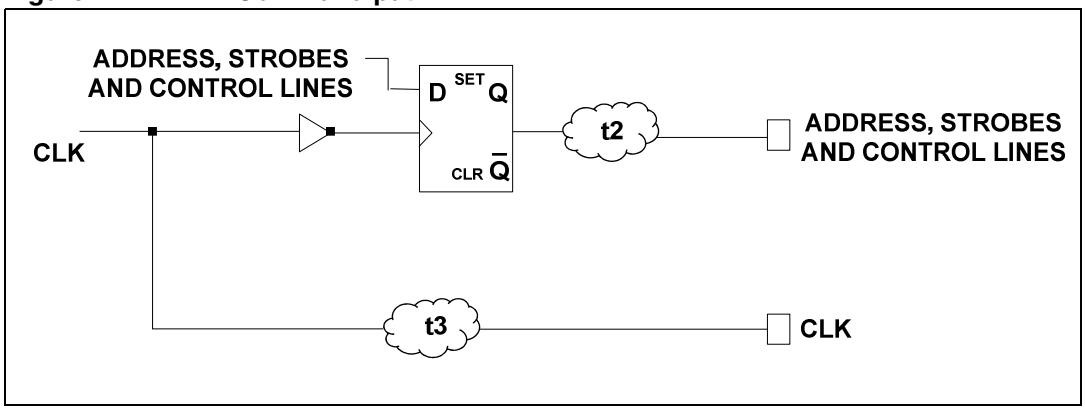

Table 28. DDR2 Command timings

Frequency	t4 max	t5 max	Unit
333 MHz	1.39	1.40	ns
266 MHz	1.77	1.78	ns
200 MHz	2.39	2.40	ns
166 MHz	2.90	2.91	ns
133 MHz	3.65	3.66	ns

6.2 CLCD timing characteristics

The characterization timing is done considering an output load of 10 pF on all the outputs.The operating conditions are in worst case V=0.90 V T=125 °C and in best case V =1.10 V T= 40° C.

The CLCD has a wide variety of configurations and setting and the parameters change accordingly. Two main scenarios will be considered, one with direct clock to output (166

MHz), setting BCD bit to '1', and the second one with the clock passing through a clock divider (83 MHz), setting BCD bit to '0'.

6.2.1 CLCD timing characteristics direct clock

Figure 13. CLCD waveform with CLCP direct

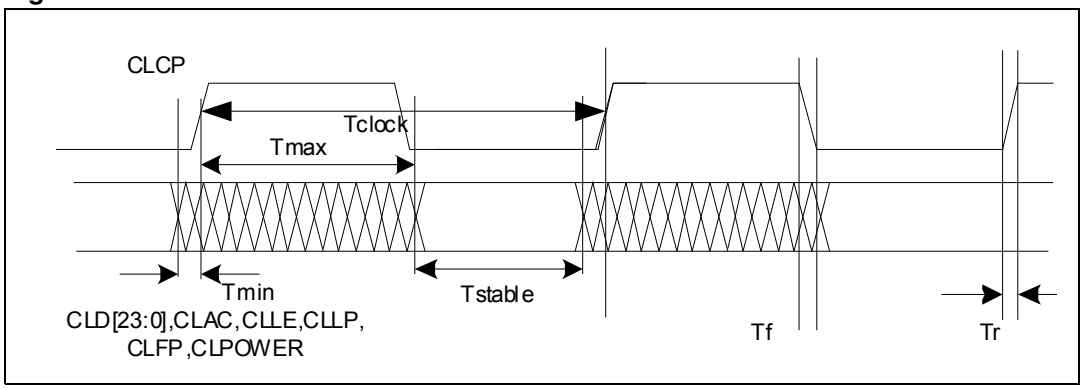

Figure 14. CLCD block diagram with CLCP direct

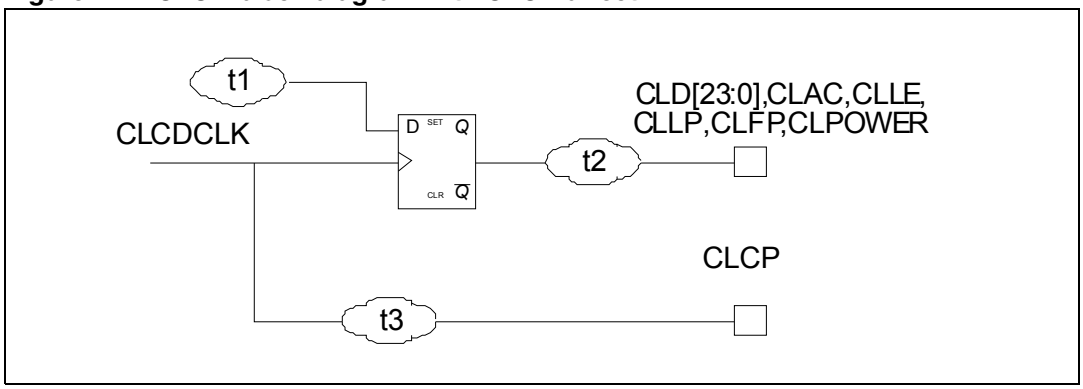

Table 29. CLCD timings with CLCP direct

Parameter	Value	Frequency
t_{CLOCK} direct max (t_{CLOCK})	6 ns	166 MHz
t_{CLOCK} direct max rise (t_r)	0.81 ns	
t_{CLOCK} direct max (t_f)	0.87 ns	
t_{min}	-0.04 ns	
t_{max}	3.62 ns	
t_{STABLE}	2.34 ns	

Note: 1 $t_{STABLE} = t_{CLOCK}$ *direct max* - $(t_{max} + t_{min})$

2 *For* t_{max} *the maximum value is taken from the worst case and best case, while for* t_{min} *the minimum value is taken from the worst case and best case.*

3 *CLCP should be delayed by* $\{t_{max} + [t_{CLOCK}$ *direct max* - $(t_{max} + t_{min})]/2\} = 4.7915$ *ns*

6.2.2 CLCD timing characteristics divided clock

Figure 15. CLCD waveform with CLCP divided

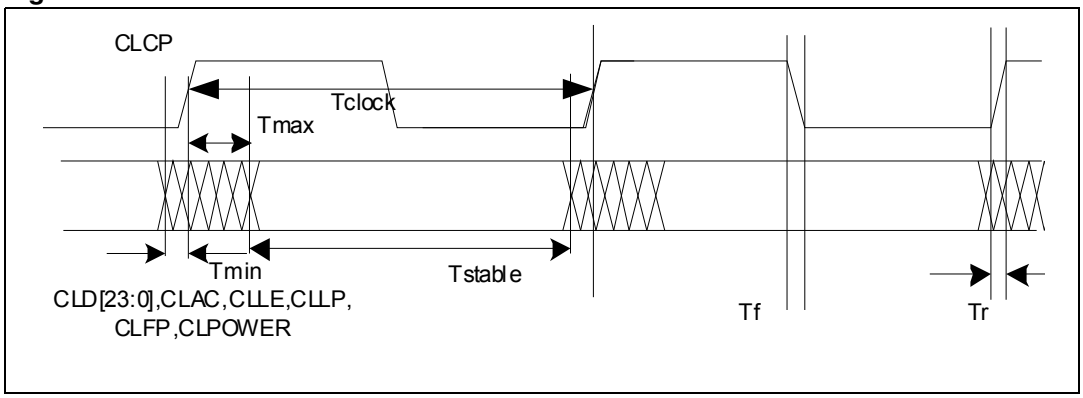

Figure 16. CLCD block diagram with CLCP divided

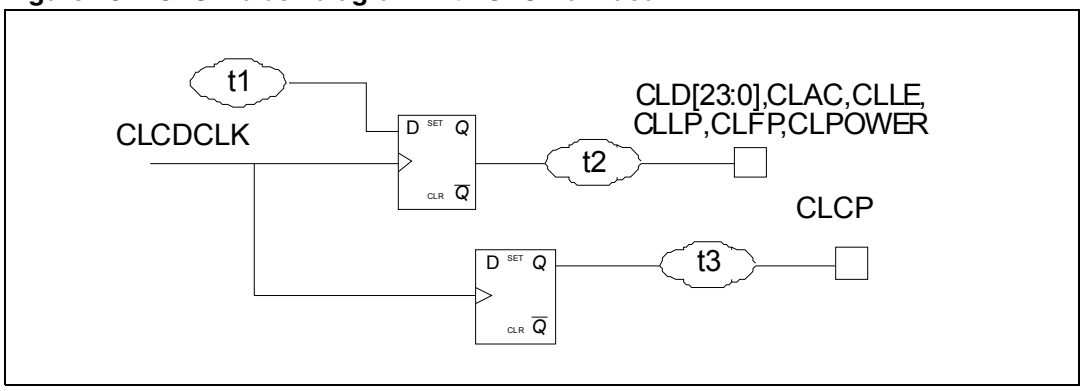

Table 30. CLCD timings with CLCP divided

Parameter	Value	Frequency
t_{CLOCK} divided max	12 ns	83.3 MHz
t_{CLOCK} divided max rise (t_r)	0.81 ns	
t_{CLOCK} divided max (t_f)	0.87 ns	
t_{min}	-0.49 ns	
t_{max}	2.38 ns	
t_{STABLE}	9.13 ns	

Note: 1 $t_{STABLE} = t_{CLOCK}$ *direct max - (tmax + tmin)*

2 *For* t_{max} *the maximum value is taken from the worst case and for* t_{min} *the minimum value is taken from the best case.*

3 *CLCP should be delayed by* $\{t_{max} + [t_{CLOCK}$ *direct max* $- (t_{max} + t_{min})]/2\} = 6.945$ *ns*

6.3 I²C timing characteristics

The characterization timing is done considering an output load of 10 pF on SCL and SDA. The operating conditions are V = 0.90 V, T_A=125° C in worst case and V =1.10 V, T_A= 40° C in best case.

Figure 17. I²C output pins

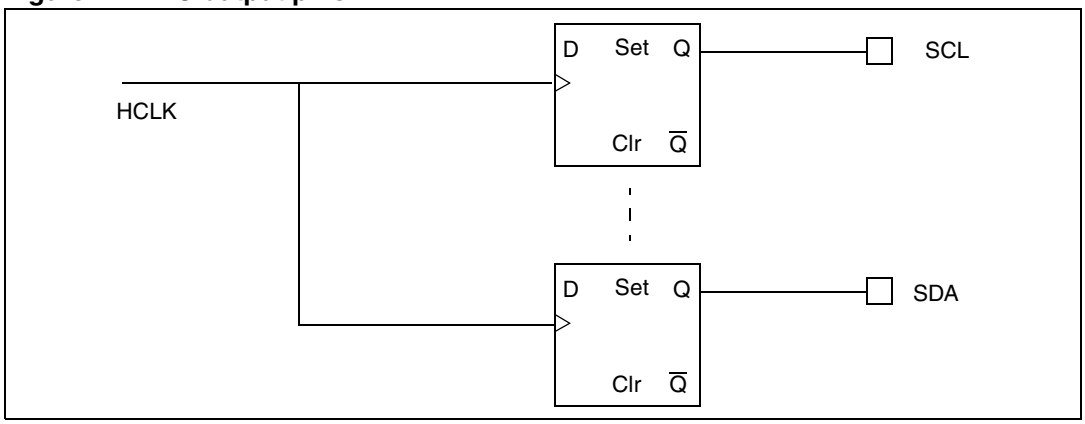

Figure 18. I²C input pins

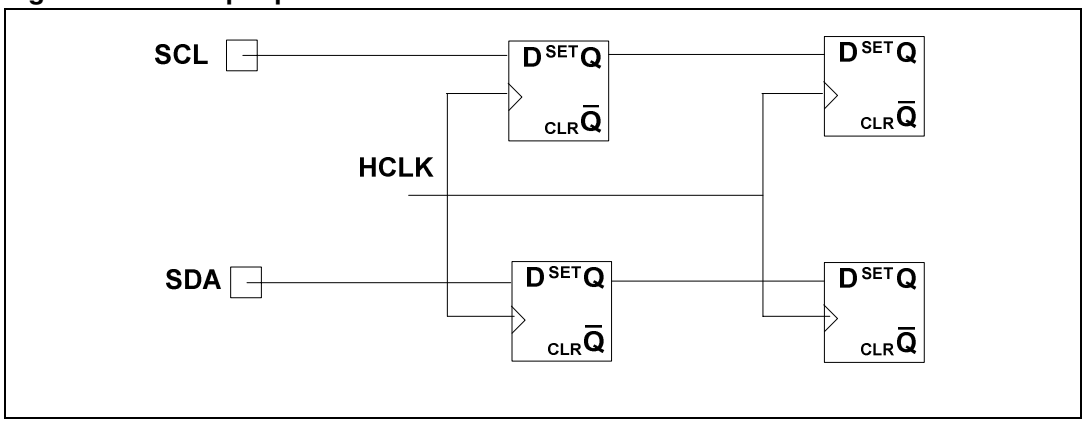

The flip-flops used to capture the incoming signals are re-synchronized with the AHB clock (HCLK): so, no input delay calculation is required.

Table 31. Output delays for I²C signals

Parameter	Min	Max	Unit
$t_{HCLK->SCLH}$	8.1067	11.8184	ns
$t_{HCLK->SCLL}$	7.9874	12.6269	ns
$t_{HCLK->SDAH}$	7.5274	11.2453	ns
$t_{HCLK->SDAL}$	7.4081	12.0530	ns

Those values are referred to the common internal source clock which has a period of:

t_{HCLK} = 6 ns.

Figure 19. Output signal waveforms for I²C signals

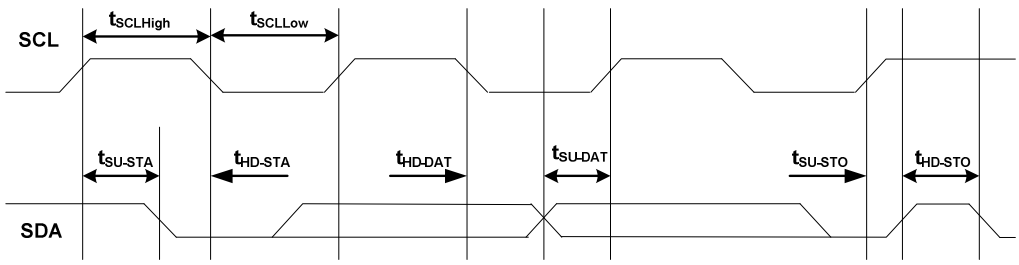

The timing of high and low level of SCL ($t_{SCLHigh}$ and t_{SCLLow}) are programmable.

Table 32. Time characteristics for I²C in high-speed mode

Parameter	Min	Unit
t_{SU-STA}	157.5897	ns
t_{HD-STA}	325.9344	
t_{SU-DAT}	314.0537	
t_{HD-DAT}	0.7812	
t_{SU-STO}	637.709	
t_{HD-STO}	4742.1628	

Table 33. Time characteristics for I²C in fast speed mode

Parameter	Min	Unit
t_{SU-STA}	637.5897	ns
t_{HD-STA}	602.169	
t_{SU-DAT}	1286.0537	
t_{HD-DAT}	0.7812	
t_{SU-STO}	637.709	
t_{HD-STO}	4742.1628	

Table 34. Time characteristics for I²C in standard speed mode

Parameter	Min	Unit
t_{SU-STA}	4723.5897	ns
t_{HD-STA}	3991.9344	
t_{SU-DAT}	4676.0537	
t_{HD-DAT}	0.7812	
t_{SU-STO}	4027.709	
t_{HD-STO}	4742.1628	

Note: 1 The timings shown in Figure 19 depend on the programmed value of $T_{SCLHigh}$ and T_{SCLLow}, so the values present in the three tables here above have been calculated using the minimum programmable values of :

IC_HS_SCL_HCNT=19 and IC_HS_SCL_LCNT=53 registers (for High-Speed mode);

IC_FS_SCL_HCNT=99 and IC_FS_SCL_LCNT=215 registers (for Fast-Speed mode);

IC_SS_SCL_HCNT=664 and IC_SS_SCL_LCNT=780 registers (for Standard-Speed mode).

Note: 1 These minimum values depend on the AHB clock (HCLK) frequency, which is 166 MHz.

2 A device may internally require a hold time of at least 300 ns for the SDA signal (referred to the V_{IHmin} of the SCL signal) to bridge the undefined region of the falling edge of SCL (Please refer to the I^2C Bus Specification v3-0 Jun 2007). However, the SDA data hold time in the I^2C controller of SPEAr300 is one-clock cycle based (6 ns with the HCLK clock at 166 MHz). This time may be insufficient for some slave devices. A few slave devices may not receive the valid address due to the lack of SDA hold time and will not acknowledge even if the address is valid. If the SDA data hold time is insufficient, an error may occur.

*3 **Workaround:** If a device needs more SDA data hold time than one clock cycle, an RC delay circuit is needed on the SDA line as illustrated in the following figure:*

Figure 20. RC delay circuit

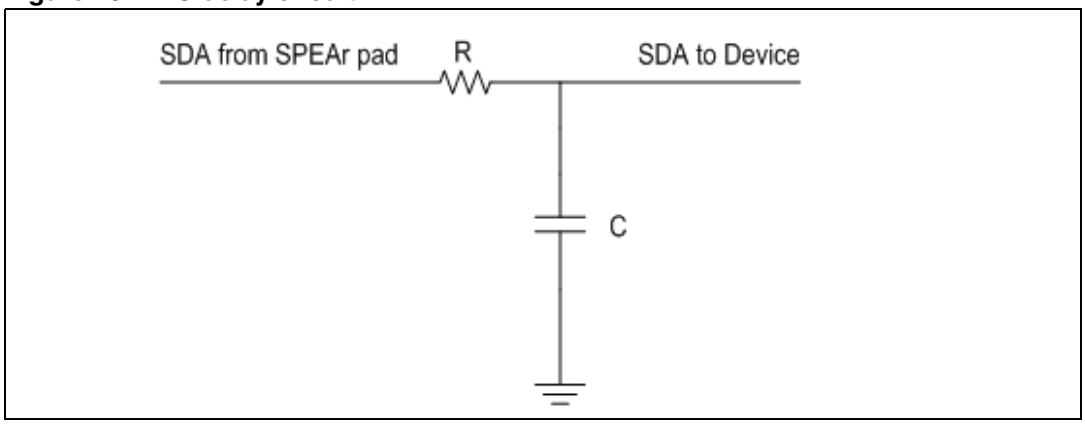

For example, R= K and C = 200 pF.

6.4 FSMC timing characteristics

The characterization timing is done considering an output load of 3 pF on the data, 15 pF on NF_CE, NF_RE and NF_WE and 10 pF on NF_ALE and NF_CLE.

The operating conditions are V= 0.90 V, T=125 °C in worst case and V=1.10 V, T= 40 °C in best case.

6.4.1 8-bit NAND Flash configuration

Figure 21. Output pads for 8-bit NAND Flash configuration

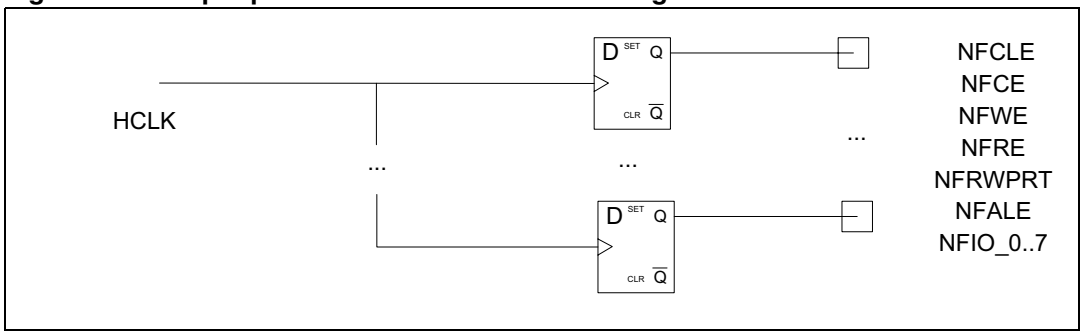

Figure 22. Input pads for 8-bit NAND Flash configuration

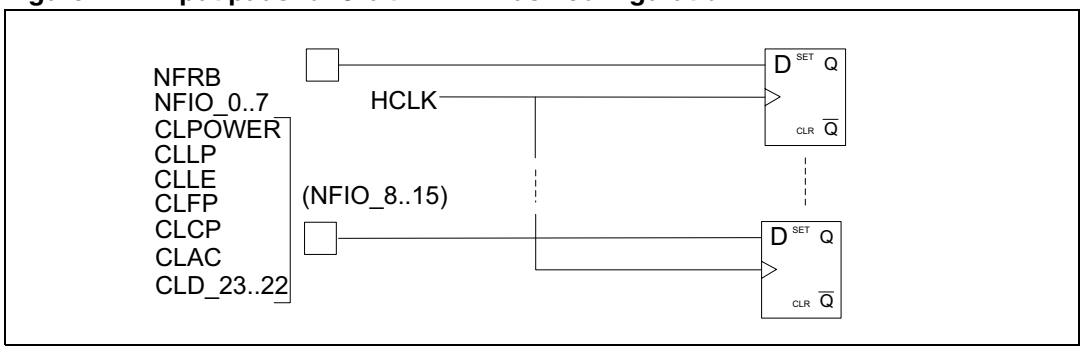

Figure 23. Output command signal waveforms for 8-bit NAND Flash configuration

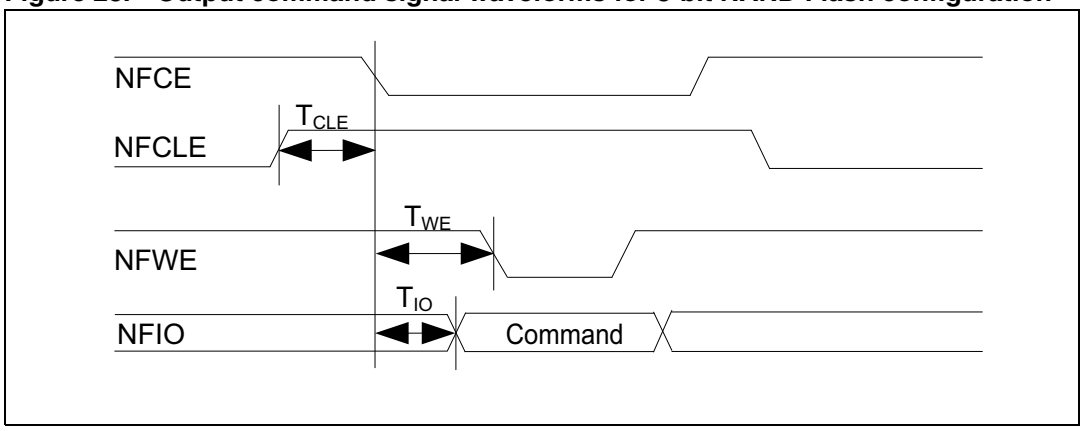

Figure 24. Output address signal waveforms for 8-bit NAND Flash configuration

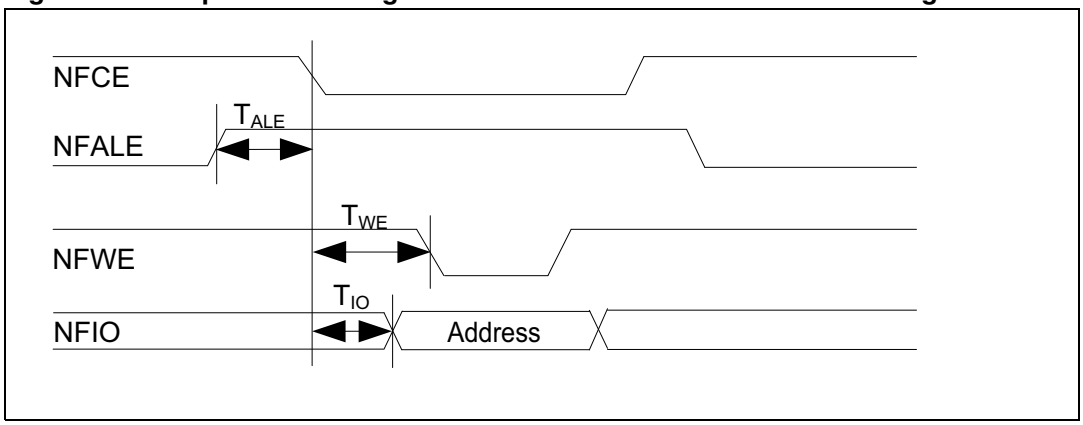

Figure 25. In/out data address signal waveforms for 8-bit NAND Flash configuration

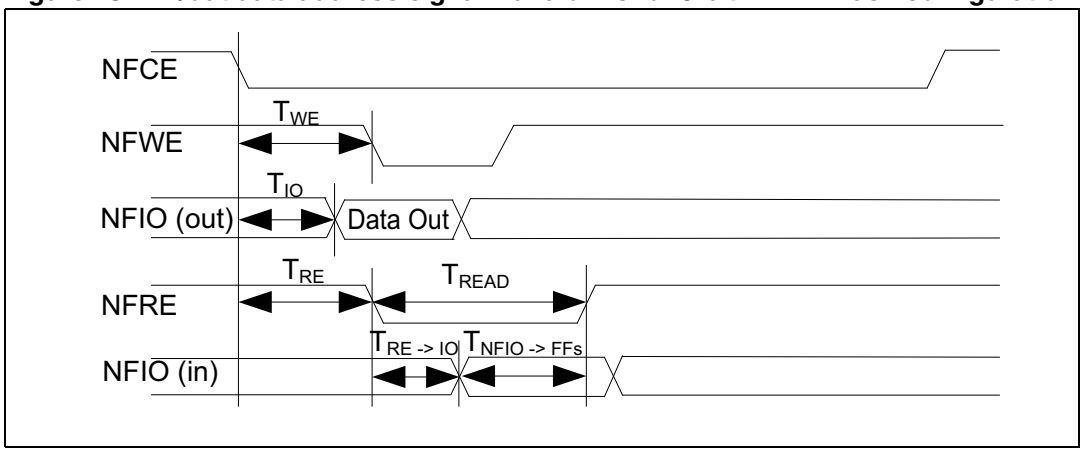

Table 35. Time characteristics for 8-bit NAND Flash configuration

Parameter	Min	Max
TCLE	-16.85 ns	-19.38 ns
TALE	-16.84 ns	-19.37 ns
TWE (s=1)	11.10 ns	13.04 ns
TRE (s=1)	11.18 ns	13.05 ns
TIO (h=1)	3.43 ns	8.86 ns

Note: Values in Table 35 are referred to the common internal source clock which has a period of THCLK = 6 ns.

6.4.2 16-bit NAND Flash configuration

Figure 26. Output pads for 16-bit NAND Flash configuration

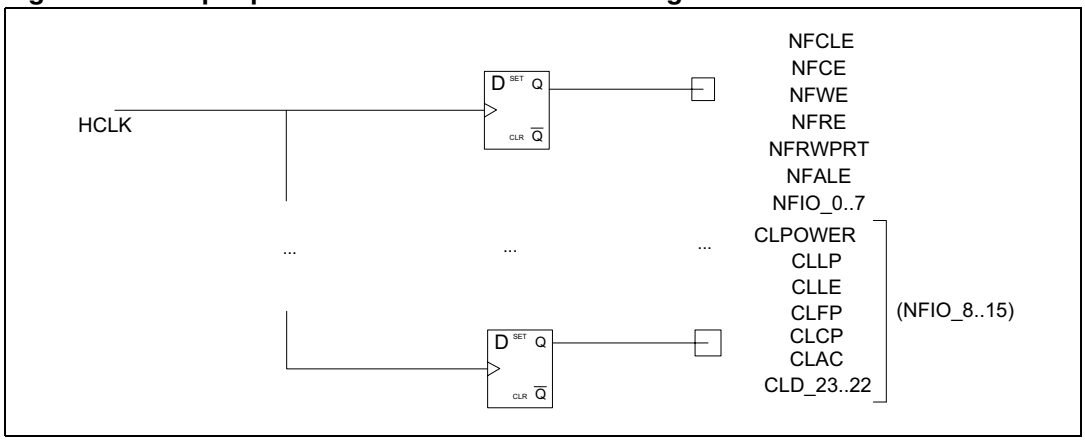

Figure 27. Input pads for 16-bit NAND Flash configuration

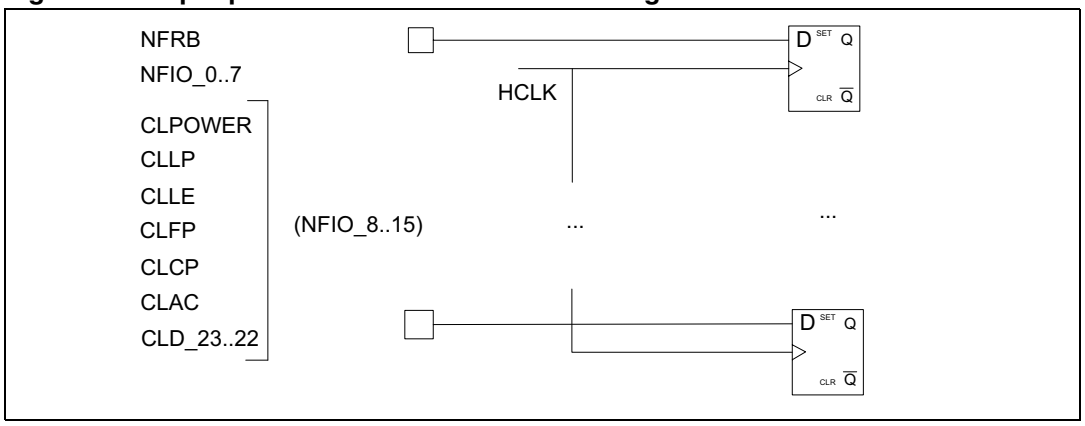

Figure 28. Output command signal waveforms 16-bit NAND Flash configuration

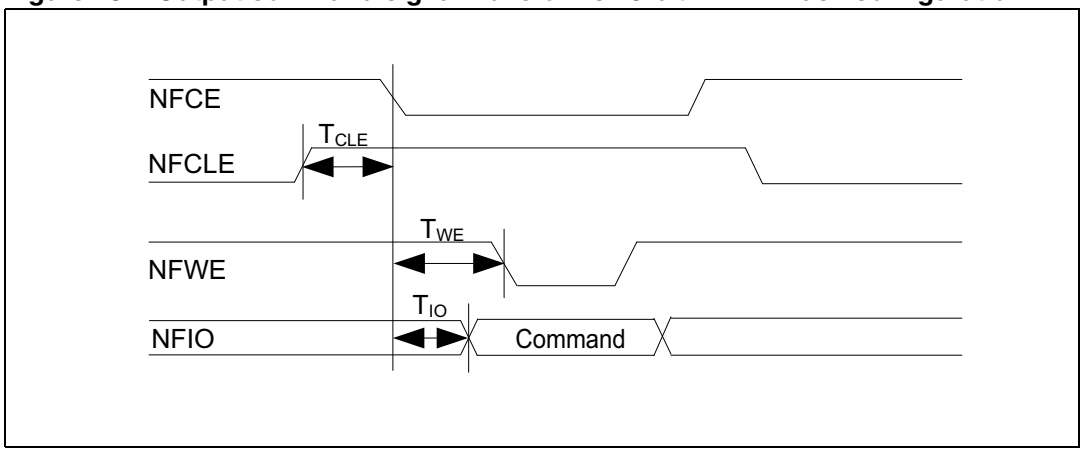

Figure 29. Output address signal waveforms 16-bit NAND Flash configuration

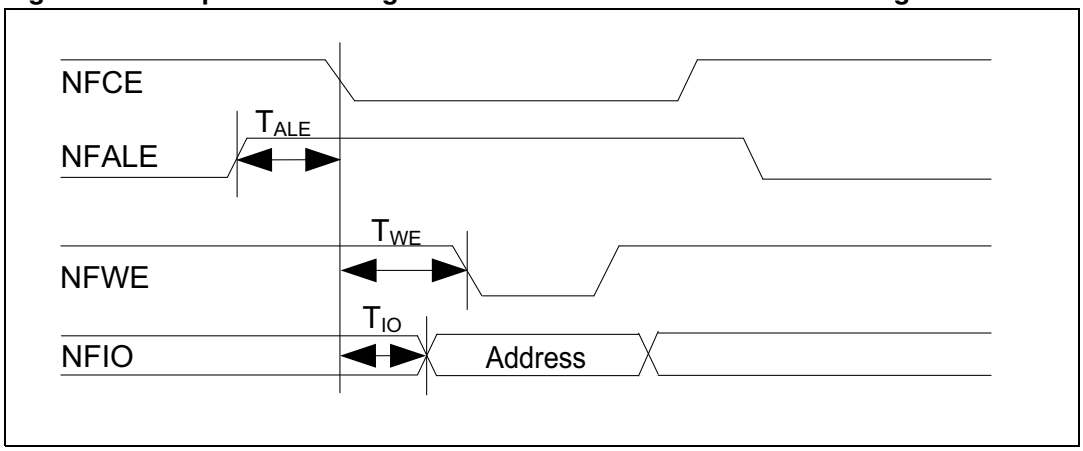

Figure 30. In/out data signal waveforms for 16-bit NAND Flash configuration

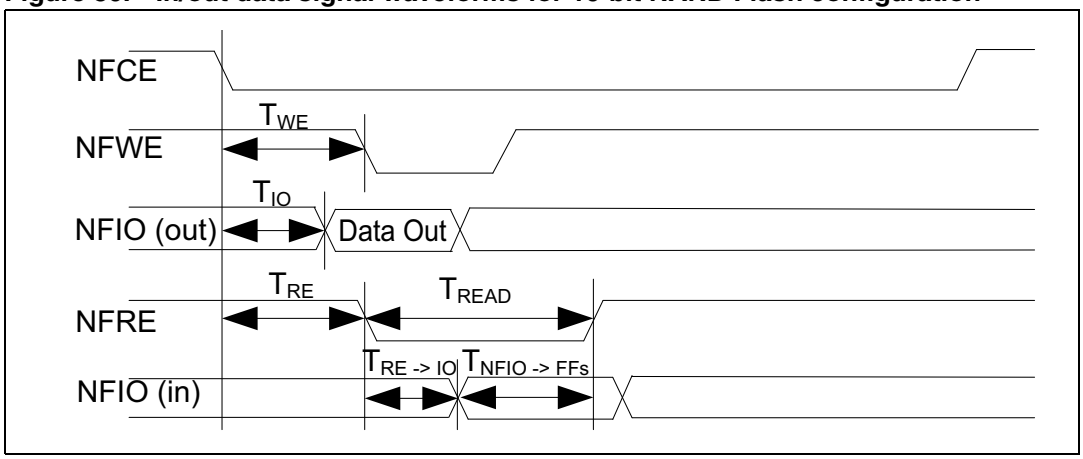

Table 36. Time characteristics for 16-bit NAND Flash configuration

Parameter	Min	Max
TCLE	-16.85 ns	-19.38 ns
TALE	-16.84 ns	-19.37 ns
TWE (s=1)	11.10 ns	13.04 ns
TRE (s=1)	11.18 ns	13.05 ns
TIO (h=1)	3.27 ns	11.35 ns

Note: Values in Table 36 are referred to the common internal source clock which has a period of THCLK = 6 ns.

6.5 Ether MAC 10/100 Mbps timing characteristics

The characterization timing is given for an output load of 5 pF on the MII TX clock and 10 pF on the other pads. The operating conditions are in worst case V=0.90 V T=125° C and in best case V=1.10 V T= 40° C.

6.5.1 MII transmit timing specifications

Figure 31. MII TX waveforms

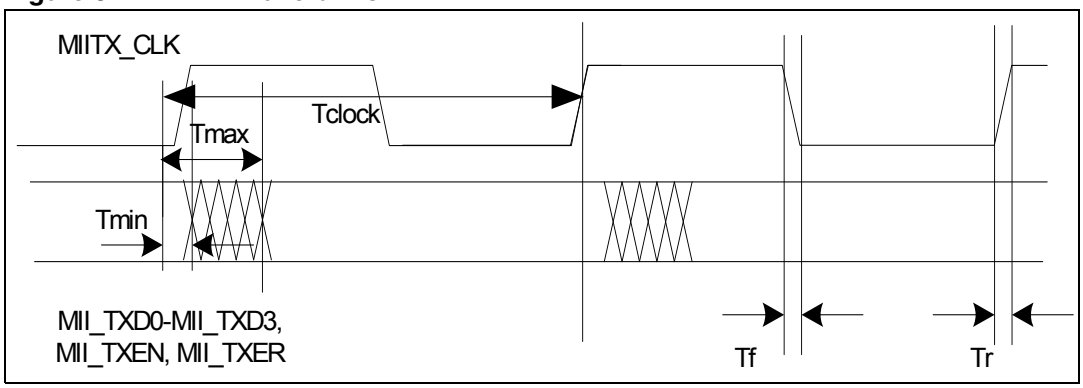

Figure 32. Block diagram of MII TX pins

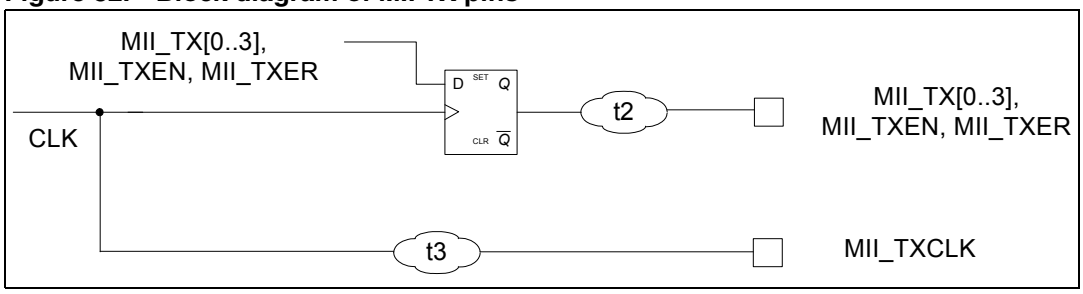

Table 37. MII TX timings

Parameter	Value using MII 10 Mb [t_{CLK} period = 40 ns 25 MHz]	Value using MII 100 Mb [t_{CLK} period = 400 ns 2.5 MHz]
t_{max}= $t2_{max}$- $t3_{min}$	6.8 ns	6.8 ns
t_{min}= $t2_{min}$- $t3_{max}$	2.9 ns	2.9 ns
t_{SETUP}	33.2 ns	393.2 ns

Note: To calculate the t_{SETUP} value for the PHY you have to consider the next t_{CLK} rising edge, so you have to apply the following formula: $t_{SETUP} = t_{CLK} - t_{max}$

6.5.2 MII receive timing specifications

Figure 33. MII RX waveforms

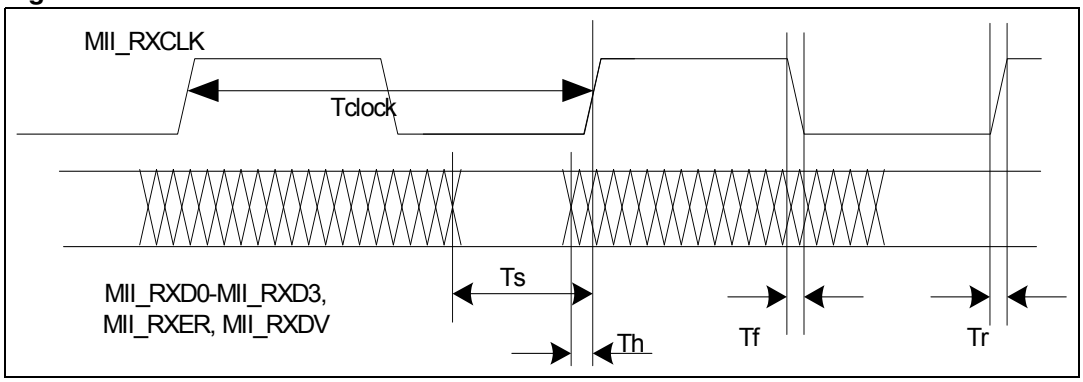

Figure 34. Block diagram of MII RX pins

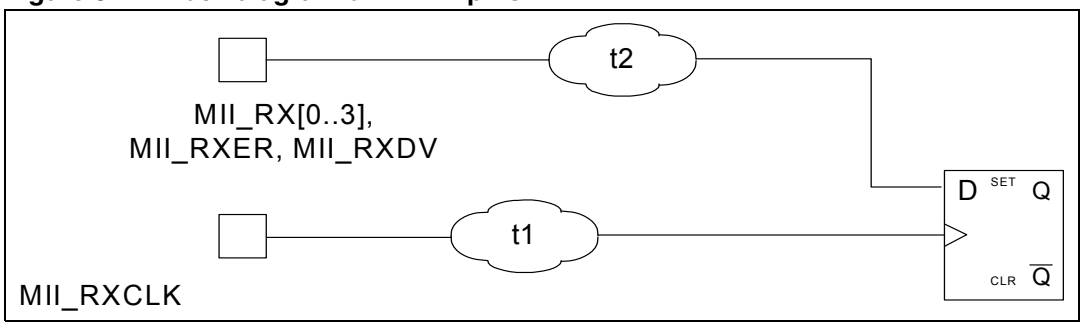

6.5.3 MDIO timing specifications

Figure 35. MDC waveforms

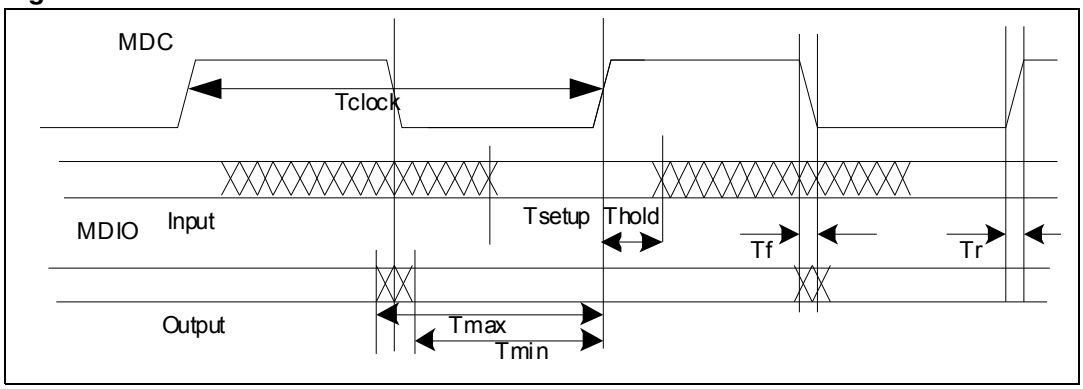

Figure 36. Paths from MDC/MDIO pads

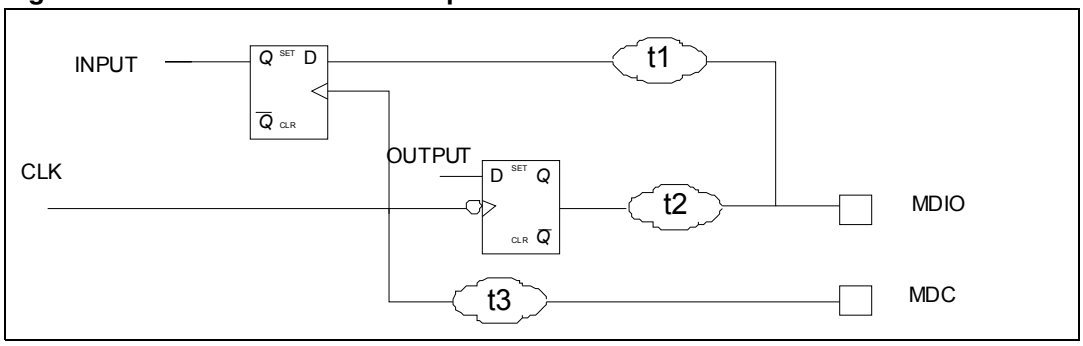

Table 38. MDC/MDIO timing

Parameter	Value	Frequency
t_{CLK} period	614.4 ns	1.63 MHz
t_{CLK} fall (t_f)	1.18 ns	
t_{CLK} rise (t_r)	1.14 ns	
Output		
$t_{max} = \sim t_{CLK}/2$	307 ns	
$t_{min} = \sim t_{CLK}/2$	307 ns	
Input		
$t_{SETUPmax} = t1_{max} - t3_{min}$	6.88 ns	
$t_{HOLDmin} = t1_{min} - t3_{max}$	-1.54 ns	

Note: When MDIO is used as output the data are launched on the falling edge of the clock as shown in Figure 35.

6.6 SMI - Serial memory interface

Figure 37. SMIDATAIN data path

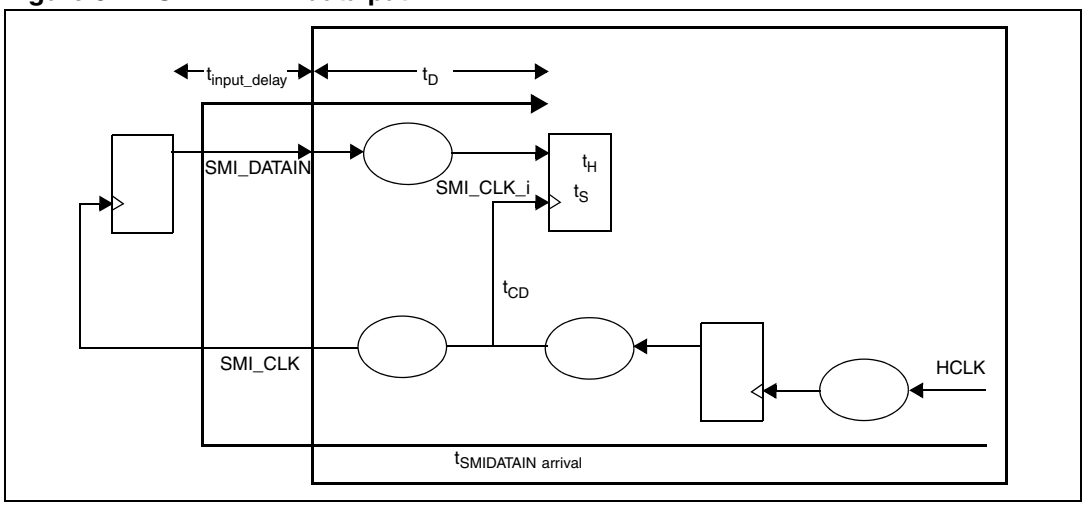

Table 39. SMIDATAIN timings

Signal	Parameter	Value
SMI_DATAIN	t_{d_max}	$t_{SMIDATAIN_arrival_max} - t_{input_delay}$
	t_{d_min}	$t_{SMIDATAIN_arrival_min} - t_{input_delay}$
	t_{cd_min}	$t_{SMI_CLK_i_arrival_min}$
	t_{cd_max}	$t_{SMI_CLK_i_arrival_max}$
	t_{SETUP_max}	$t_s + t_{d_max} - t_{cd_min}$
	t_{HOLD_min}	$t_h - t_{d_min} + t_{cd_max}$

Figure 38. SMIDATAOUT/SMICSn data paths

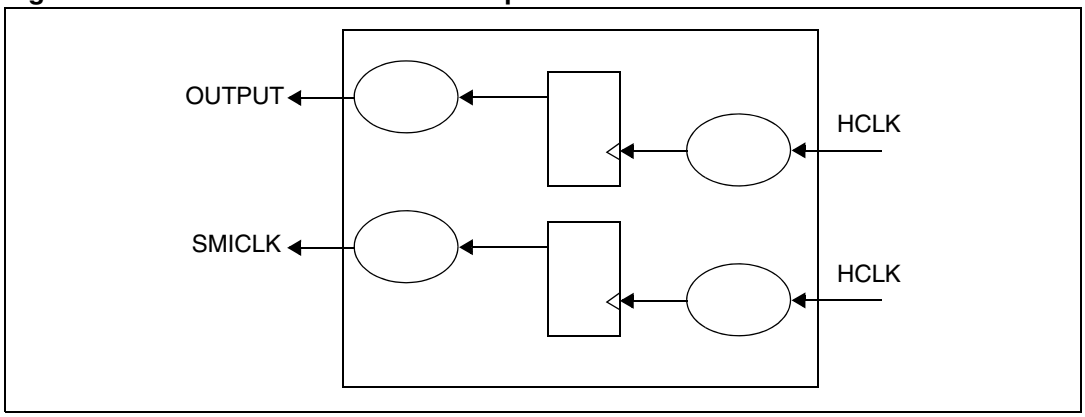

Figure 39. SMIDATAOUT timings

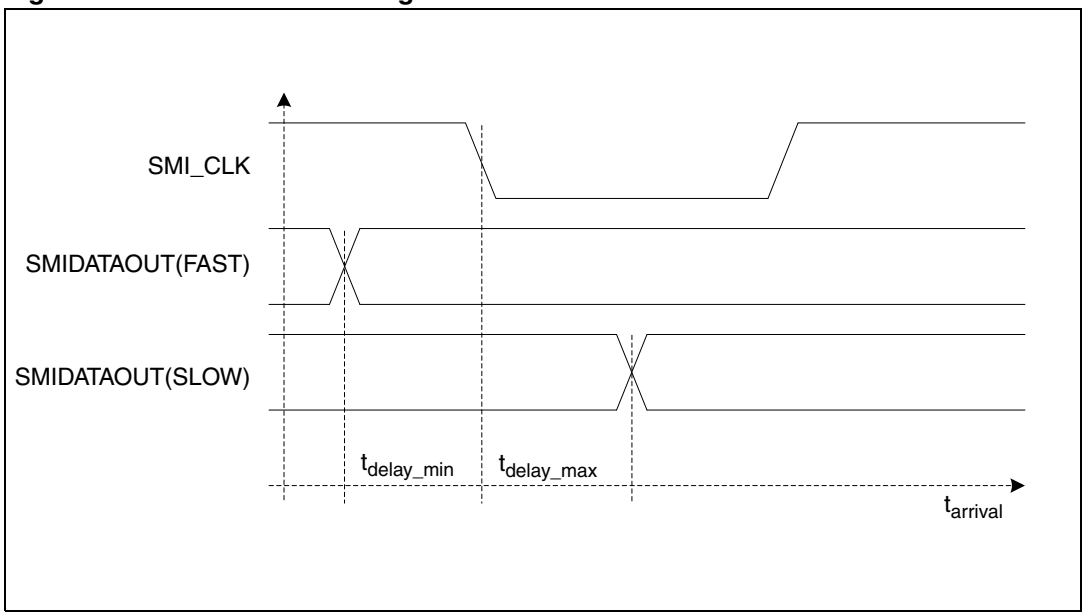

Table 40. SMIDATAIN timings

Signal	Parameter	Value
SMI_DATAOUT	t_{delay_max}	$t_{arrivalSMIDATAOUT_max}$ - $t_{arrival_SMI_CLK_min}$
	t_{delay_min}	$t_{arrivalSMIDATAOUT_min}$ - $t_{arrival_SMI_CLK_max}$

Figure 40. SMICSn fall timings

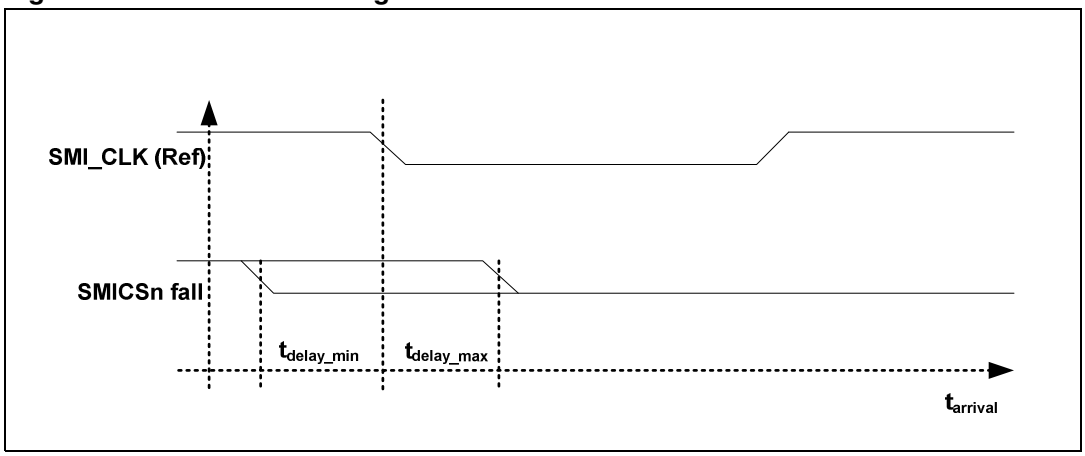

Table 41. SMICSn fall timings

Signal	Parameter	Value
SMI_CSn fall	t_{delay_max}	$t_{arrivalSMICSn_max_fall}$ - $t_{arrival_SMI_CLK_min_fall}$
	t_{delay_min}	$t_{arrivalSMICSn_min_fall}$ - $t_{arrival_SMI_CLK_max_fall}$

Figure 41. SMICSn rise timings

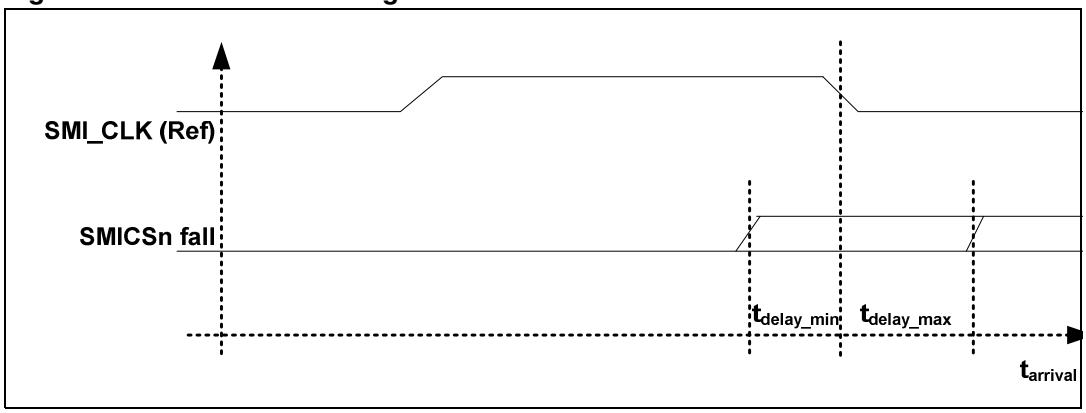

Table 42. SMICSn rise timings

Signal	Parameter	Value
SMI_CSn rise	t_{delay_max}	$t_{arrivalSMICSn_max_rise}$ - $t_{arrival_SMI_CLK_min_fall}$
	t_{delay_min}	$t_{arrivalSMICSn_min_rise}$ - $t_{arrival_SMI_CLK_max_fall}$

Table 43. Timing requirements for SMI

Parameter		Input setup-hold/output delay		
		Max	Min	Unit
SMI_CLK	Fall time	1.82	1.40	ns
	Rise time	1.63	1.19	
SMIDATAIN	Input setup time	8.27		
	Input hold time	-2.59		
SMIDATAOUT Output valid time		2.03		
SMICS_0 Output valid time	fall	1.92		
	rise	1.69		
SMICS_1Output valid time	fall	1.78		
	rise	1.63		

6.7 SSP timing characteristics

This module provides a programmable length shift register which allows serial communication with other SSP devices through a 3 or 4 wire interface (SSP_CLK, SSP_MISO, SSP_MOSI and SSP_CSn). The SSP supports the following features:

- Master/Slave mode operations
- Chip-selects for interfacing to multiple slave SPI devices.
- 3 or 4 wire interface (SSP_SCK, SSP_MISO, SSP_MOSI and SSP_CSn)
- Single interrupt
- Separate DMA events for SPI Receive and Transmit
- 16-bit shift register
- Receive buffer register
- Programmable character length (2 to 16 bits)
- Programmable SSP clock frequency range
- 8-bit clock pre-scaler
- Programmable clock phase (delay or no delay)
- Programmable clock polarity

Note: The following tables and figures show the characterization of the SSP using the SPI protocol.

Table 44. Timing requirements for SSP (all modes)

No.	Parameters		Value	Unit
1	$T_{c(CLK)}$	Cycle time, SSP_CLK	24	ns
2	$T_{w(CLKH)}$	Pulse duration, SSP_CLK high	0.49T - 0.51T	ns
3	$T_{w(CLKL)}$	Pulse duration, SSP_CLK low	0.51T - 0.49T	ns

T = Tc(CLK) = SSP_CLK period is equal to the SSP module master clock divided by a configurable divider.

Figure 42. SSP_CLK timings

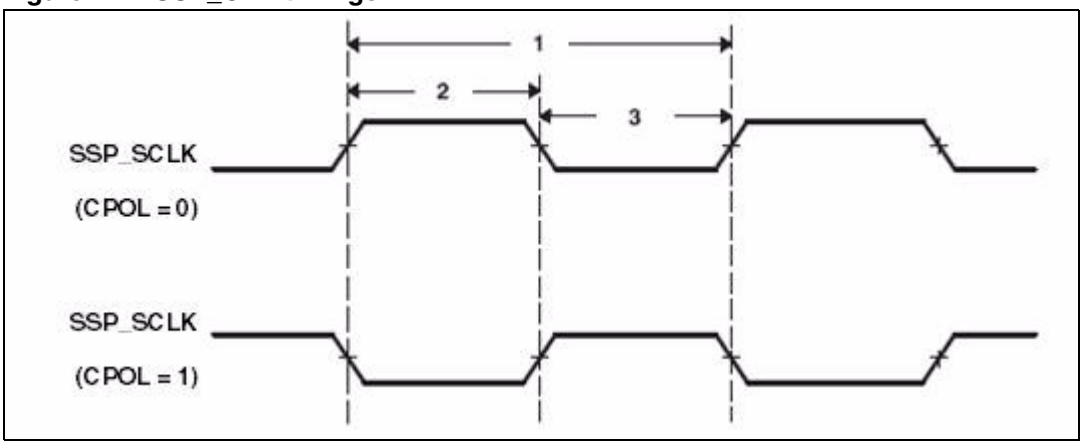

6.7.1 SPI master mode timings (clock phase = 0)

Table 45. Timing requirements for SPI master mode (clock phase = 0)

No.	Parameters			Min	Max	Unit
13	$t_{su(DIV-CLKL)}$	Setup time, MISO (input) valid before SSP_CLK (output) rising edge	Clock Polarity = 0	-0.411	-0.342	ns
14	$t_{su(DIV-CLKH)}$	Setup time, MISO (input) valid before SSP_CLK (output) falling edge	Clock Polarity = 1	-0.411	-0.342	ns
15	$t_{h(CLKL-DIV)}$	Hold time, MISO (input)valid after SSP_CLK (output) rising edge	Clock Polarity = 0	0.912	1.720	ns
16	$t_{h(CLKH-DIV)}$	Hold time, MISO (input) valid after SSP_CLK (output) falling edge	Clock Polarity = 1	0.912	1.720	ns

P = 1/SSP_CLK in nanoseconds (ns). For example, if the SSP_CLK frequency is 83 MHz, use P = 12.048 ns

Table 46. Switching characteristics over recommended operating conditions for SPI master mode (clock phase = 0)

No.	Parameters			Min	Max	Unit
17	$t_{d(CLKH-DOV)}$	Delay time, SSP_CLK (output) falling edge to MOSI (output) transition	Clock Polarity = 0	-3.138	2.175	ns
18	$t_{d(CLKL-DOV)}$	Delay time, SSP_CLK (output) rising edge to MOSI (output) transition	Clock Polarity = 1	-3.138	2.175	ns
19	$t_{d(ENL-CLKH/L)}$	Delay time, SSP_CSn (output) falling edge to first SSP_CLK (output) rising or falling edge		T/2		ns
20	$t_{d(CLKH/L-ENH)}$	Delay time, SSP_CLK (output) rising or falling edge to SSP_CSn (output) rising edge		T		ns

Figure 43. SPI master mode external timing (clock phase = 0)

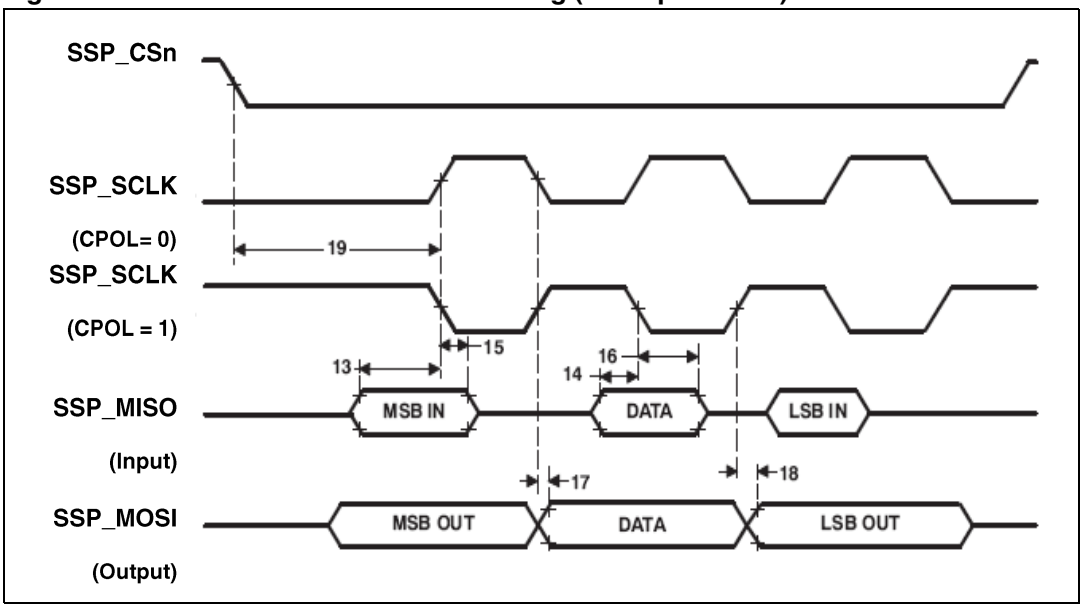

6.7.2 SPI master mode timings (clock phase = 1)

Table 47. Timing requirements for SPI master mode (clock phase = 1)

No.	Parameters			Min	Max	Unit
4	$t_{su(DIV-CLKL)}$	Setup time, MISO (input) valid before SSP_CLK (output) falling edge	Clock polarity = 0	-0.411	-0.342	ns
5	$t_{su(DIV-CLKH)}$	Setup time, MISO (input) valid before SSP_CLK (output) rising edge	Clock polarity = 1	-0.411	-0.342	ns
6	$t_{h(CLKL-DIV)}$	Hold time, MISO (input) valid after SSP_CLK (output) falling edge	Clock polarity = 0	0.912	1.720	ns
7	$t_{h(CLKH-DIV)}$	Hold time, MISO (input) valid after SSP_CLK (output) rising edge	Clock polarity = 1	0.912	1.720	ns

Table 48. Switching characteristics over recommended operating conditions for SPI master mode (clock phase = 1)

No.	Parameters			Min	Max	Unit
8	$t_{d(CLKH-DOV)}$	Delay time, SSP_CLK (output) rising edge to MOSI (output) transition	Clock Polarity = 0	-3.138	2.175	ns
9	$t_{d(CLKL-DOV)}$	Delay time, SSP_CLK (output) falling edge to MOSI (output) transition	Clock Polarity = 1	-3.138	2.175	ns

Table 48. Switching characteristics over recommended operating conditions for SPI master mode (clock phase = 1) (continued)

No.	Parameters		Min	Max	Unit
10	$t_{d(ENL-CLKH/L)}$	Delay time, SSP_CSn (output) falling edge to first SSP_CLK (output) rising or falling edge	T		ns
11	$td_{(CLKH/L-ENH)}$	Delay time, SSP_CLK (output) rising or falling edge to SSP_CSn (output) rising edge	T/2		ns

Figure 44. SPI master mode external timing (clock phase = 1)

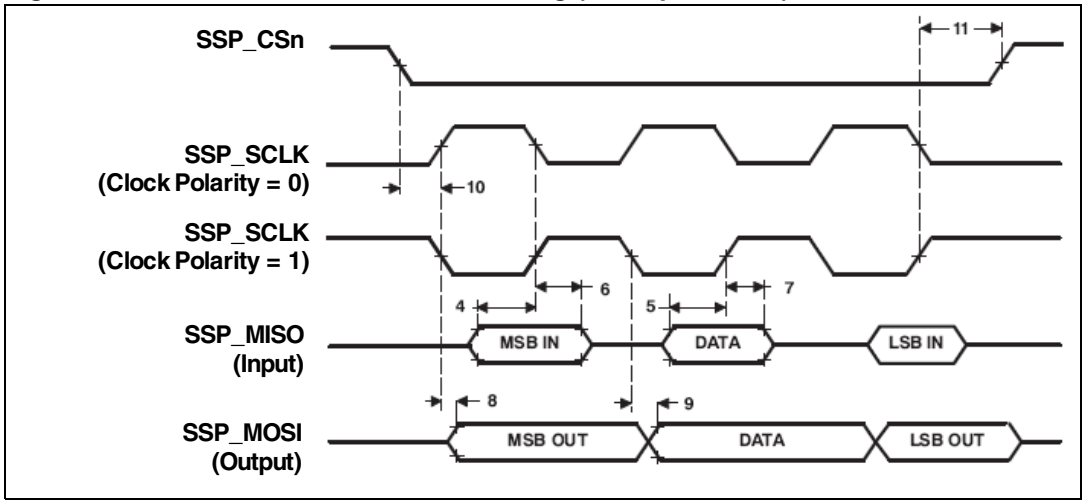

6.8 UART (Universal asynchronous receiver/transmitter)

Figure 45. UART transmit and receive timings

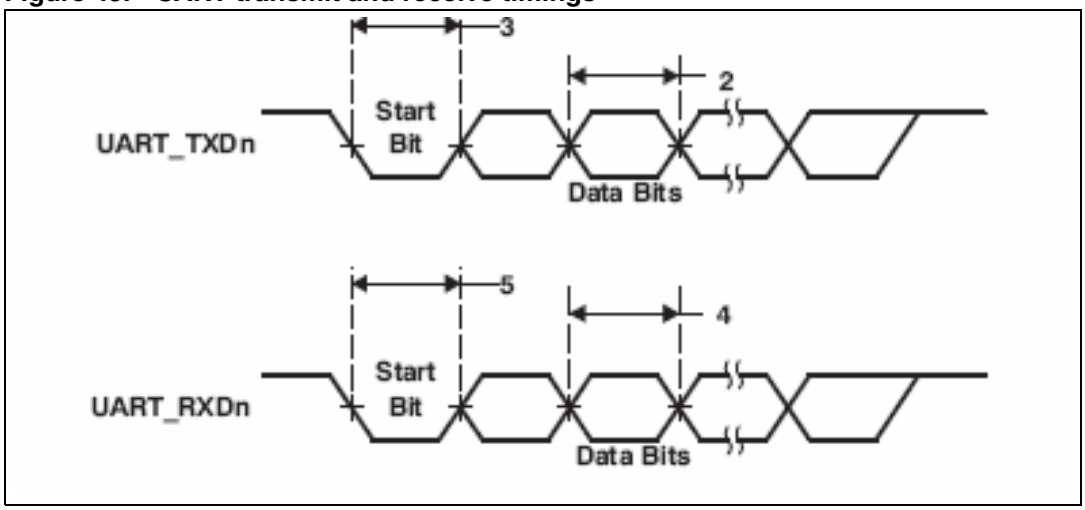

Table 49. UART transmit timing characteristics

S.No.	Parameters	Min	Max	Unit
1	UART Maximum Baud Rate		3	Mbps
2	UART Pulse Duration Transmit Data (TxD)	$0.99B_{(1)}$	$B_{(1)}$	ns
3	UART Transmit Start Bit	$0.99B_{(1)}$	$B_{(1)}$	ns

Table 50. UART receive timing characteristics

S.No.	Parameters	Min	Max	Units
4	UART Pulse Duration Receive Data (RxD)	$0.97B_{(1)}$	$1.06B_{(1)}$	ns
5	UART Receive Start Bit	$0.97B_{(1)}$	$1.06B_{(1)}$	ns

where (1) B = UART baud rate

7 Package information

In order to meet environmental requirements, ST offers these devices in different grades of ECOPACK® packages, depending on their level of environmental compliance. ECOPACK® specifications, grade definitions and product status are available at: *www.st.com*. ECOPACK® is an ST trademark.

Table 51. LFBGA289 (15 x 15 x 1.7 mm) mechanical data

Dim.	mm			inches		
	Min.	Typ.	Max.	Min.	Typ.	Max.
A			1.700			0.0669
A1	0.270			0.0106		
A2		0.985			0.0387	
A3		0.200			0.0078	
A4			0.800			0.0315
b	0.450	0.500	0.550	0.0177	0.0197	0.0217
D	14.850	15.000	15.150	0.5846	0.5906	0.5965
D1		12.800			0.5039	
E	14.850	15.000	15.150	0.5846	0.5906	0.5965
E1		12.800			0.5039	
e		0.800			0.0315	
F		1.100			0.0433	
ddd			0.200			0.0078
eee			0.150			0.0059
fff			0.080			0.0031

Figure 46. LFBGA289 package dimensions

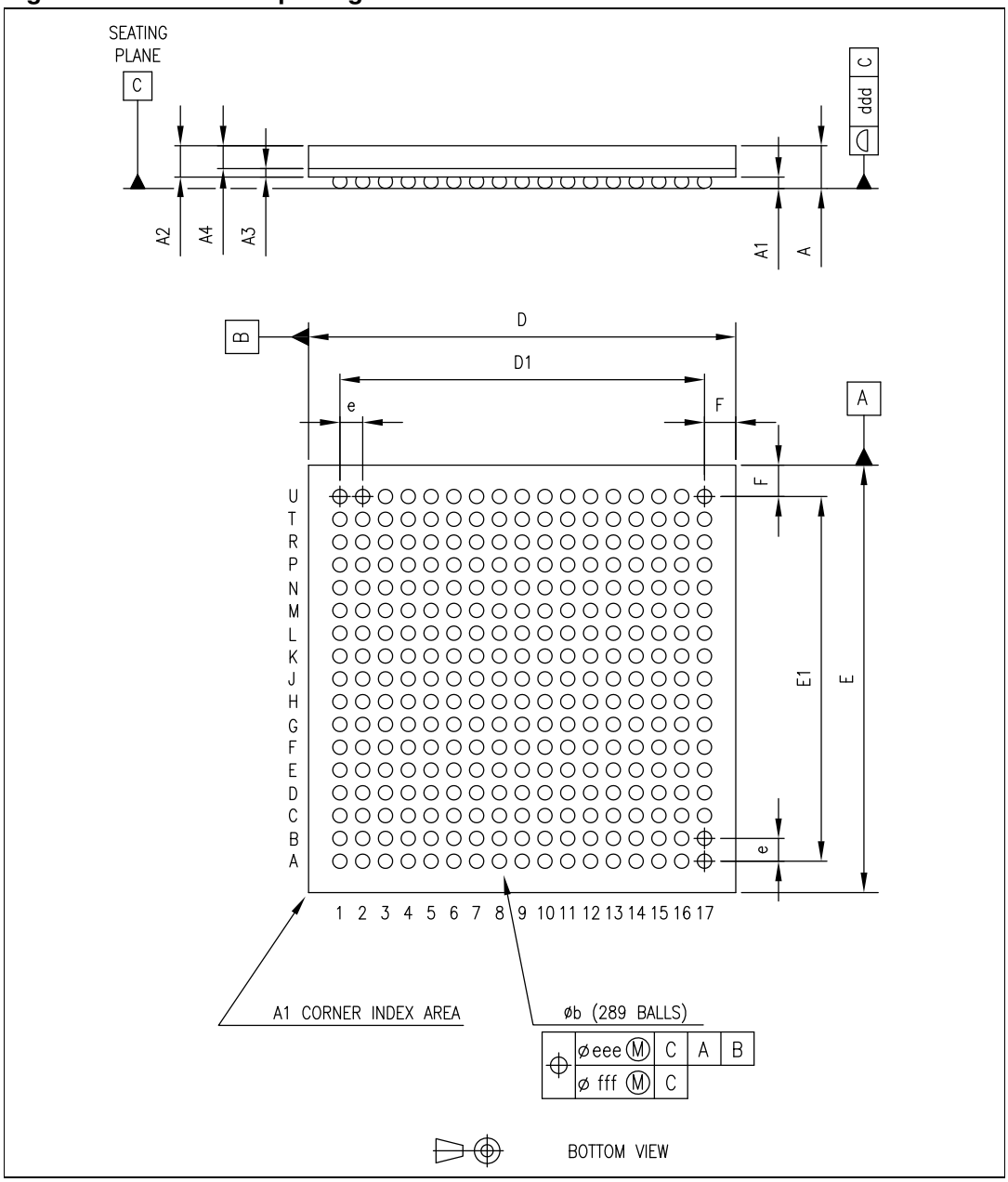

Table 52. Thermal resistance characteristics

Package	Θ_{JC} (°C/W)	Θ_{JB} (°C/W)
LFBGA289	18.5	24.5

8 Revision history

Table 53. Document revision history

Date	Revision	Changes
15-Oct-2009	1	Initial release.
29-Apr-2010	2	Changed the order of chapters in *Section 2: Architecture overview* Updated *Section 3.3: Shared I/O pins (PL_GPIOs) on page 35* Updated number of GPIOs in *Table 10 on page 41* Updated *Table 11: PL_GPIO multiplexing scheme on page 42* Added *Section 3.4: PL_GPIO pin sharing for debug modes on page 47* Updated *Section 5: Electrical characteristics*, *Section 6.1: DDR2 timing characteristics*, *Section 6.3: I^2C timing characteristics*, *Section 6.4: FSMC timing characteristics* and *Section 6.7: SSP timing characteristics* Added *Table 52: Thermal resistance characteristics* in Package information.

Please Read Carefully:

Information in this document is provided solely in connection with ST products. STMicroelectronics NV and its subsidiaries (“ST”) reserve the right to make changes, corrections, modifications or improvements, to this document, and the products and services described herein at any time, without notice.

All ST products are sold pursuant to ST’s terms and conditions of sale.

Purchasers are solely responsible for the choice, selection and use of the ST products and services described herein, and ST assumes no liability whatsoever relating to the choice, selection or use of the ST products and services described herein.

No license, express or implied, by estoppel or otherwise, to any intellectual property rights is granted under this document. If any part of this document refers to any third party products or services it shall not be deemed a license grant by ST for the use of such third party products or services, or any intellectual property contained therein or considered as a warranty covering the use in any manner whatsoever of such third party products or services or any intellectual property contained therein.

UNLESS OTHERWISE SET FORTH IN ST’S TERMS AND CONDITIONS OF SALE ST DISCLAIMS ANY EXPRESS OR IMPLIED WARRANTY WITH RESPECT TO THE USE AND/OR SALE OF ST PRODUCTS INCLUDING WITHOUT LIMITATION IMPLIED WARRANTIES OF MERCHANTABILITY, FITNESS FOR A PARTICULAR PURPOSE (AND THEIR EQUIVALENTS UNDER THE LAWS OF ANY JURISDICTION), OR INFRINGEMENT OF ANY PATENT, COPYRIGHT OR OTHER INTELLECTUAL PROPERTY RIGHT.

UNLESS EXPRESSLY APPROVED IN WRITING BY AN AUTHORIZED ST REPRESENTATIVE, ST PRODUCTS ARE NOT RECOMMENDED, AUTHORIZED OR WARRANTED FOR USE IN MILITARY, AIR CRAFT, SPACE, LIFE SAVING, OR LIFE SUSTAINING APPLICATIONS, NOR IN PRODUCTS OR SYSTEMS WHERE FAILURE OR MALFUNCTION MAY RESULT IN PERSONAL INJURY, DEATH, OR SEVERE PROPERTY OR ENVIRONMENTAL DAMAGE. ST PRODUCTS WHICH ARE NOT SPECIFIED AS "AUTOMOTIVE GRADE" MAY ONLY BE USED IN AUTOMOTIVE APPLICATIONS AT USER’S OWN RISK.

Resale of ST products with provisions different from the statements and/or technical features set forth in this document shall immediately void any warranty granted by ST for the ST product or service described herein and shall not create or extend in any manner whatsoever, any liability of ST.

ST and the ST logo are trademarks or registered trademarks of ST in various countries.

Information in this document supersedes and replaces all information previously supplied.

The ST logo is a registered trademark of STMicroelectronics. All other names are the property of their respective owners.

© 2010 STMicroelectronics - All rights reserved

STMicroelectronics group of companies

Australia - Belgium - Brazil - Canada - China - Czech Republic - Finland - France - Germany - Hong Kong - India - Israel - Italy - Japan - Malaysia - Malta - Morocco - Philippines - Singapore - Spain - Sweden - Switzerland - United Kingdom - United States of America

www.st.com