CATEGORY	DESCRIPTION	P/N #
CONNECTOR	Modular Jack, 8P8C, Straddle DIP	MJ88B-XX11-RVLX1-X

料号由原MJ88B-BX11-RVLX1-X
变更为 MJ88B-XX11-RVLX1-X

REV.	ECN NO	DESCRIPTION	REVISED	DATE
A01	———	New Release	XSY	2013.10.09
A02	———	变更料号	XSY	2016.05.05
A03	———	增加塑胶材质选项	XSY	2018.01.04

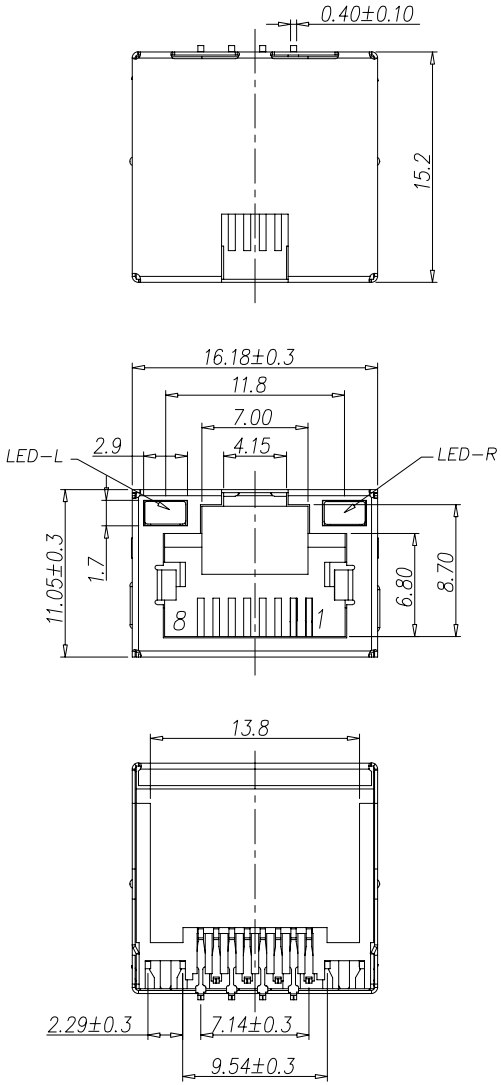

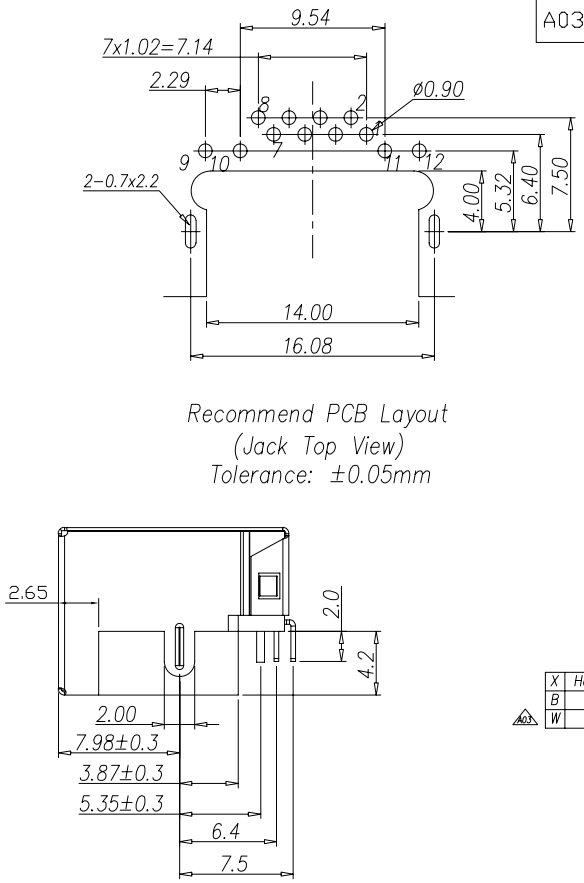

Recommend PCB Layout
(Jack Top View)
Tolerance: ±0.05mm

SPECIFICATIONS:

1. RJ Electrical Characteristics
   - 1-1: Voltage: 150V AC RMS
   - 1-2: Current Rating: 1.5A
   - 1-3: Contact Resistance: 40mΩ MAX.
   - 1-4: Insulation Resistance: 500MΩ MIN.
   - 1-5: Dielectric Withstang Voltage :1000V AC
   - 1-6: Operature Temperature: -40°C~80°C

MJ88B-XX11-RVLX1-X

X	包装方式	
C	载带包装	
P	吸塑包装	
C1	载带包装（热封式）	

Table 2

	X	Housing Color	Housing Material
A03	B	Black	LCP UL94V-0
	W	White	PA9T UL94V-0

Table 1

X	LED TYPE	LED-L	LED-R
1	LED 塑胶主体透明白色	Yellow	Green
2	LED 塑胶主体透明带颜色区分		
3	LED 塑胶主体透明带颜色区分	Green	Yellow
4	LED 塑胶主体透明白色	Green	Yellow

Material & Plating

X	Terminal Plating
0	Au 1u" Plating
1	Au 3u" Plating
2	Au 6u" Plating
3	Au 15u" Plating
4	Au 30u" Plating
5	Au 50u" Plating

東莞市合陵電子有限公司
Connector DongGuan HeLing Electronic Co.,LTD

NO.	PART NAME	Q'TY	MATERIAL	PLATING & COLOR
e	LED-R	1	See Table 1	Tin Plating
d	LED-L	1	See Table 1	Tin Plating
c	Shielding	1	Brass, T=0.2mm	Ni Plating
b	Terminal	8	Phosphor Bronze, T=0.3mm	Au/Tin Plating
a	Housing	1	See Table 2	See Table 2

UNLESS OTHERWISE SPECIFED TOLERANCES

DECIMALS: X :±0.5, X.X :±0.3, X.XX :±0.2
ANGLES: X :±2°, X.X :±1°

SCALE:1/1	UNIT: mm		DWG.NO:
SIZE: A3	PAGE:1 OF 1	REV:A03	WI-061-001

APPROVED BY	CHECKED BY	PREPARED BY
DICK	XSY	XSY

CUSTOMER COPY