Package Information Datasheet for Mature Altera Devices

DS-PKG-16.8

This datasheet provides package and thermal resistance information for mature Altera® devices. Package information includes the ordering code reference, package acronym, leadframe material, lead finish (plating), JEDEC outline reference, lead coplanarity, weight, moisture sensitivity level, and other special information. The thermal resistance information includes device pin count, package name, and resistance values.

This datasheet includes the following sections:

- "Device and Package Cross Reference" on page 1
- "Thermal Resistance" on page 23
- "Package Outlines" on page 44

For more package and thermal resistance information about Altera devices that are not listed in this datasheet, refer to the Package and Thermal Resistance page of the Altera website.

For information about trays, tubes, and dry packs, refer to *AN 71: Guidelines for Handling J-Lead, QFP, and BGA Devices*.

RoHS-compliant devices are compatible with leaded-reflow temperatures. For more information, refer to Altera's RoHS-Compliant Devices literature page.

Device and Package Cross Reference

Table 2 through Table 22 lists the device, package type, and number of pins for each Altera device listed in this datasheet. Altera devices listed in this datasheet are available in the following packages:

- Ball-Grid Array (BGA)
- Ceramic Pin-Grid Array (PGA)
- FineLine BGA (FBGA)
- Hybrid FineLine BGA (HBGA)
- Plastic Dual In-Line Package (PDIP)
- Plastic Enhanced Quad Flat Pack (EQFP)
- Plastic J-Lead Chip Carrier (PLCC)
- Plastic Quad Flat Pack (PQFP)
- Power Quad Flat Pack (RQFP)
- Thin Quad Flat Pack (TQFP)
- Ultra FineLine BGA (UBGA)

Table 1 lists the Altera devices and the associated table locations.

Table 1. Mature Altera Device and Package Cross Reference

Altera Device	Table locations
Arria® series FPGAs	■ Arria GX Devices: Table 2 on page 3
Stratix® series FPGAs	■ Stratix II Devices: Table 3 on page 3 ■ Stratix Devices: Table 4 on page 5
Cyclone® series FPGAs	■ Cyclone II Devices: Table 5 on page 7 ■ Cyclone Devices: Table 6 on page 8
MAX® series CPLDs	■ MAX 9000 Devices: Table 7 on page 8 ■ MAX 7000 Devices: Table 8 on page 9 ■ MAX 3000A Devices: Table 9 on page 10
HardCopy® series ASICs	■ HardCopy II Devices: Table 10 on page 11 ■ HardCopy Devices: Table 11 on page 11 ■ HardCopy APEX Devices: Table 12 on page 12
APEX™ series FPGAs	■ APEX II Devices: Table 13 on page 13 ■ APEX 20KE Devices: Table 14 on page 13 ■ APEX 20KC Devices: Table 15 on page 15 ■ APEX 20K Devices: Table 16 on page 15
ACEX® 1K FPGAs	ACEX 1K Devices: Table 17 on page 16
Mercury™ FPGAs	Mercury Devices: Table 18 on page 17
FLEX® series FPGAs	■ FLEX 10KA Devices: Table 19 on page 17 ■ FLEX 10KS Devices: Table 20 on page 18 ■ FLEX 10KE Devices: Table 21 on page 18
Excalibur™ FPGAs	Excalibur Devices: Table 22 on page 21
Configuration devices	Configuration Devices: Table 23 on page 22
Enhanced configuration devices	Enhanced Configuration Devices: Table 24 on page 22

Arria GX Devices

Table 2 lists the device name, package type, and number of pins for the Arria GX device family.

☞ The package type entries with "Option #" refer to instances where multiple package options exist for a given package type and pin count. The option number identifies the specific type used by the corresponding device density.

Table 2. Arria GX Devices

Device	Package	Pins
EP1AGX20	Dual-Piece Lid: FBGA, Flip Chip, Option 1 Single-Piece Lid: FBGA, Flip Chip, Option 4	484
	Dual-Piece Lid: FBGA, Flip Chip, Option 1 Single-Piece Lid: FBGA, Flip Chip, Option 3	780
EP1AGX35	Dual-Piece Lid: FBGA, Flip Chip, Option 1 Single- Piece Lid: FBGA, Flip Chip, Option 4	484
	Dual-Piece Lid: FBGA, Flip Chip, Option 1 Single-Piece Lid: FBGA, Flip Chip, Option 3	780
EP1AGX50	Channel Lid: FBGA, Flip Chip, Option 1	484
	Dual-Piece Lid: FBGA, Flip Chip, Option 1 Single-Piece Lid: FBGA, Flip Chip, Option 3	780
	Dual-Piece Lid: FBGA, Flip Chip, Option 1 Single-Piece Lid: FBGA, Flip Chip, Option 2	1152
EP1AGX60	Channel Lid: FBGA, Flip Chip, Option 1	484
	Dual-Piece Lid: FBGA, Flip Chip, Option 1 Single-Piece Lid: FBGA, Flip Chip, Option 3	780
	Dual-Piece Lid: FBGA, Flip Chip, Option 1 Single-Piece Lid: FBGA, Flip Chip, Option 2	1152
EP1AGX90	Dual-Piece Lid: FBGA, Flip Chip, Option 1 Single-Piece Lid: FBGA, Flip Chip, Option 2	1152

Stratix II Devices

Table 3 lists the device name, package type, and number of pins for the Stratix II device family.

☞ The package type entries with "Option #" refer to instances where multiple package options exist for a given package type and pin count. The option number identifies the specific type used by the corresponding device density.

Table 3. Stratix II Devices (Part 1 of 2)

Device	Package	Pins
EP2S15	Dual-Piece Lid: FBGA, Flip Chip, Option 1 Single-Piece Lid: FBGA, Flip Chip, Option 4	484
	Dual-Piece Lid: FBGA, Flip Chip, Option 1 Single-Piece Lid: FBGA, Flip Chip, Option 4	672

Table 3. Stratix II Devices (Part 2 of 2)

Device	Package	Pins
EP2S30	Dual-Piece Lid: FBGA, Flip Chip, Option 1 Single-Piece Lid: FBGA, Flip Chip, Option 4	484
	Dual-Piece Lid: FBGA, Flip Chip, Option 1 Single-Piece Lid: FBGA, Flip Chip, Option 4	672
EP2S60	Dual-Piece Lid: FBGA, Flip Chip, Option 1	484
	Dual-Piece Lid: FBGA, Flip Chip, Option 1 Single-Piece Lid: FBGA, Flip Chip, Option 4	672
	Dual-Piece Lid: FBGA, Flip Chip, Option 1 Single-Piece Lid: FBGA, Flip Chip, option 2	1020
EP2S90	Channel Lid: HBGA, Flip Chip	484
	Dual-Piece Lid: FBGA, Flip Chip, Option 1 Single-Piece Lid: FBGA, Flip Chip, Option 3	780
	Dual-Piece Lid: FBGA, Flip Chip, Option 1 Single-Piece Lid: FBGA, Flip Chip, Option 2	1020
	Dual-Piece Lid: FBGA, Flip Chip, Option 1 Single-Piece Lid: FBGA, Flip Chip, Option 2	1508
EP2S130	Channel Lid: FBGA, Flip Chip, Option 1	780
	Dual-Piece Lid: FBGA, Flip Chip, Option 1 Single-Piece Lid: FBGA, Flip Chip, Option 2	1020
	Dual-Piece Lid: FBGA, Flip Chip, Option 1 Single-Piece Lid: FBGA, Flip Chip, Option 2	1508
EP2S180	Dual-Piece Lid: FBGA, Flip Chip, Option 1 Single-Piece Lid: FBGA, Flip Chip, Option 2	1020
	Dual-Piece Lid: FBGA, Flip Chip, Option 1 Single-Piece Lid: FBGA, Flip Chip, Option 2	1508
EP2SGX30	Dual-Piece Lid: FBGA, Flip Chip, Option 1 Single-Piece Lid: FBGA, Flip Chip, Option 3	780
EP2SGX60	Dual-Piece Lid: FBGA, Flip Chip, Option 1 Single-Piece Lid: FBGA, Flip Chip, Option 3	780
	Dual-Piece Lid: FBGA, Flip Chip, Option 1 Single-Piece Lid: FBGA, Flip Chip, Option 2	1152
EP2SGX90	Dual-Piece Lid: FBGA, Flip Chip, Option 1 Single-Piece Lid: FBGA, Flip Chip, Option 2	1152
	Dual-Piece Lid: FBGA, Flip Chip, Option 1 Single-Piece Lid: FBGA, Flip Chip, Option 2	1508
EP2SGX130	Dual-Piece Lid: FBGA, Flip Chip, Option 1 Single-Piece Lid: FBGA, Flip Chip, Option 2	1508

Stratix Devices

Table 4 lists the device name, package type, and number of pins for the Stratix device family.

☞ The package type entries with "Option #" refer to instances where multiple package options exist for a given package type and pin count. The option number identifies the specific type used by the corresponding device density.

Table 4. Stratix Devices (Part 1 of 2)

Device	Package	Pins
EP1SGX10	Dual-Piece Lid: FBGA, Flip Chip, Option 1 Single-Piece Lid: FBGA, Flip Chip, Option 4	672
EP1SGX25	Dual-Piece Lid: FBGA, Flip Chip, Option 1 Single-Piece Lid: FBGA, Flip Chip, Option 4	672
	Dual-Piece Lid: FBGA, Flip Chip, Option 1 Single-Piece Lid: FBGA, Flip Chip, Option 2	1020
EP1SGX40	Dual-Piece Lid: FBGA, Flip Chip, Option 1 Single-Piece Lid: FBGA, Flip Chip, Option 2	1020
EP1S10	Dual-Piece Lid: FBGA, Flip Chip, Option 1 Single-Piece Lid: FBGA, Flip Chip, Option 4	484
	BGA, Wire Bond	672
	FBGA, Wire Bond, Option 2	672
	Dual-Piece Lid: FBGA, Flip Chip, Option 1 Single-Piece Lid: FBGA, Flip Chip, Option 3	780
EP1S20	Dual-Piece Lid: FBGA, Flip Chip, Option 1 Single-Piece Lid: FBGA, Flip Chip, Option 4	484
	BGA, Wire Bond	672
	FBGA, Wire Bond, Option 2	672
	Dual-Piece Lid: FBGA, Flip Chip, Option 1 Single-Piece Lid: FBGA, Flip Chip, Option 3	780
EP1S25	BGA, Wire Bond	672
	FBGA, Wire Bond, Option 2	672
	Dual-Piece Lid: FBGA, Flip Chip, Option 1 Single-Piece Lid: FBGA, Flip Chip, Option 3	780
	Dual-Piece Lid: FBGA, Flip Chip, Option 1 Single-Piece Lid: FBGA, Flip Chip, Option 2	1020
EP1S30	Dual-Piece Lid: FBGA, Flip Chip, Option 1 Single-Piece Lid: FBGA, Flip Chip, Option 3	780
	Dual-Piece Lid: BGA, Flip Chip, Option 1 Single-Piece Lid: BGA, Flip Chip, Option 2	956
	Dual-Piece Lid: FBGA, Flip Chip, Option 1 Single-Piece Lid: FBGA, Flip Chip, Option 2	1020

Table 4. Stratix Devices (Part 2 of 2)

Device	Package	Pins
EP1S40	Dual-Piece Lid: FBGA, Flip Chip, Option 1 Single-Piece Lid: FBGA, Flip Chip, Option 3	780
	Dual-Piece Lid: BGA, Flip Chip, Option 1 Single-Piece Lid: BGA, Flip Chip, Option 2	956
	Dual-Piece Lid: FBGA, Flip Chip, Option 1 Single-Piece Lid: FBGA, Flip Chip, Option 2	1020
	Dual-Piece Lid: FBGA, Flip Chip, Option 1 Single-Piece Lid: FBGA, Flip Chip, Option 2	1508
EP1S60	Dual-Piece Lid: BGA, Flip Chip, Option 1 Single-Piece Lid: BGA, Flip Chip, Option 2	956
	Dual-Piece Lid: FBGA, Flip Chip, Option 1 Single-Piece Lid: FBGA, Flip Chip, Option 2	1020
	Dual-Piece Lid: FBGA, Flip Chip, Option 1 Single-Piece Lid: FBGA, Flip Chip, Option 2	1508
EP1S80	Dual-Piece Lid: BGA, Flip Chip, Option 1 Single-Piece Lid: BGA, Flip Chip, Option 2	956
	Dual-Piece Lid: FBGA, Flip Chip, Option 1	1020
	Dual-Piece Lid: FBGA, Flip Chip, Option 1 Single-Piece Lid: FBGA, Flip Chip, Option 2	1508

© December 2011 Altera Corporation

Cyclone II Devices

Table 5 lists the device name, package type, and number of pins for the Cyclone II device family.

☞ The package type entries with "Option #" refer to instances where multiple package options exist for a given package type and pin count. The option number identifies the specific type used by the corresponding device density.

Table 5. Cyclone II Devices

Device	Package	Pins
EP2C5	TQFP, Wire Bond	144
	PQFP, Wire Bond	208
	FBGA, Wire Bond, Option 2, Thin	256
EP2C8	TQFP, Wire Bond	144
	PQFP, Wire Bond	208
	FBGA, Wire Bond, Option 2, Thin	256
EP2C8A	FBGA, Wire Bond, Option 2, Thin	256
EP2C15A	FBGA, Wire Bond, Option 2, Thin	256
	FBGA, Wire Bond, A:2.40	484
EP2C20	PQFP, Wire Bond	240
	FBGA, Wire Bond, Option 2, Thin	256
	FBGA, Wire Bond, A:2.40	484
EP2C20A	FBGA, Wire Bond, Option 2, Thin	256
	FBGA, Wire Bond, A:2.40	484
EP2C35	FBGA, Wire Bond, A:2.40	484
	UBGA, Wire Bond	484
	FBGA, Wire Bond, A:2.40	672
EP2C50	FBGA, Wire Bond, A:2.40	484
	UBGA, Wire Bond	484
	FBGA, Wire Bond, A:2.40	672
EP2C70	FBGA, Wire Bond, A:2.40	672
	FBGA, Wire Bond, A:2.40	896

Cyclone Devices

Table 6 lists the device name, package type, and number of pins for the Cyclone device family.

☞ The package type entries with "Option #" refer to instances where multiple package options exist for a given package type and pin count. The option number identifies the specific type used by the corresponding device density.

Table 6. Cyclone Devices

Device	Package	Pins
EP1C3	TQFP, Wire Bond	100
	TQFP, Wire Bond	144
EP1C4	FBGA, Wire Bond, Option 1	324
	FBGA, Wire Bond	400
EP1C6	TQFP, Wire Bond	144
	PQFP, Wire Bond	240
	FBGA, Wire Bond, Option 1	256
EP1C12	PQFP, Wire Bond	240
	FBGA, Wire Bond, Option 1	256
	FBGA, Wire Bond, Option 1	324
EP1C20	FBGA, Wire Bond, Option 1	324
	FBGA, Wire Bond	400

MAX 9000 Devices

Table 7 lists the device name, package type, and number of pins for the MAX 9000 device family.

Table 7. MAX 9000 Devices

Device	Package	Pins
EPM9320	BGA, Wire Bond	356
EPM9320A	BGA, Wire Bond	356
EPM9560	BGA, Wire Bond	356

MAX 7000 Devices

Table 8 lists the device name, package type, and number of pins for the MAX 7000 device family.

☞ The package type entries with "Option #" refer to instances where multiple package options exist for a given package type and pin count. The option number identifies the specific type used by the corresponding device density.

Table 8. MAX 7000 Devices (Part 1 of 2)

Device	Package	Pins
EPM7032B	PLCC, Wire Bond	44
	TQFP, Wire Bond	44
	UBGA, Wire Bond	49
EPM7064B	TQFP, Wire Bond	44
	UBGA, Wire Bond	49
	FBGA, Wire Bond, Option 1	100
	TQFP, Wire Bond	100
EPM7128B	UBGA, Wire Bond	49
	TQFP, Wire Bond	100
	FBGA, Wire Bond, Option 1	100
	TQFP, Wire Bond	144
	UBGA, Wire Bond	169
	FBGA, Wire Bond, Option 1	256
EPM7256B	TQFP, Wire Bond	100
	TQFP, Wire Bond	144
	UBGA, Wire Bond	169
	PQFP, Wire Bond	208
	FBGA, Wire Bond, Option 1	256
EPM7512B	TQFP, Wire Bond	144
	UBGA, Wire Bond	169
	PQFP, Wire Bond	208
	FBGA, Wire Bond, Option 1	256
	BGA, Wire Bond, Option 1	256
EPM7032AE	PLCC, Wire Bond	44
	TQFP, Wire Bond	44
EPM7064AE	PLCC, Wire Bond	44
	UBGA, Wire Bond	49
	FBGA, Wire Bond, Option 1	100
	TQFP, Wire Bond	44
	TQFP, Wire Bond	100
	FBGA, Wire Bond, Option 1	256
EPM7128AE	PLCC, Wire Bond	84
	FBGA, Wire Bond, Option 1	100
	TQFP, Wire Bond	100
	TQFP, Wire Bond	144
	UBGA, Wire Bond	169
	FBGA, Wire Bond, Option 1	256

Table 8. MAX 7000 Devices (Part 2 of 2)

Device	Package	Pins
EPM7256AE	TQFP, Wire Bond	100
	FBGA, Wire Bond, Option 1	100
	TQFP, Wire Bond	144
	PQFP, Wire Bond	208
	FBGA, Wire Bond, Option 1	256
EPM7512AE	TQFP, Wire Bond	144
	PQFP, Wire Bond	208
	BGA, Wire Bond, Option 1	256
	FBGA, Wire Bond, Option 1	256
EPM7032A	PLCC, Wire Bond	44
	TQFP, Wire Bond	44
EPM7128A	PLCC, Wire Bond	84
	TQFP, Wire Bond	100
	FBGA, Wire Bond	100
	TQFP, Wire Bond	144
	FBGA, Wire Bond, Option 1	256
EPM7256A	TQFP, Wire Bond	100
	TQFP, Wire Bond	144
	PQFP, Wire Bond	208
	FBGA, Wire Bond, Option 1	256
EPM7192E	PGA, Wire Bond	160
	PQFP, Wire Bond	160

MAX 3000A Devices

Table 8 lists the device name, package type, and number of pins for the MAX 3000A device family.

☞ The package type entries with "Option #" refer to instances where multiple package options exist for a given package type and pin count. The option number identifies the specific type used by the corresponding device density.

Table 9. MAX 3000A Devices (Part 1 of 2)

Device	Package	Pins
EPM3032A	PLCC, Wire Bond	44
	TQFP, Wire Bond	44
EPM3064A	TQFP, Wire Bond	44
	PLCC, Wire Bond	44
	TQFP, Wire Bond	100
EPM3128A	TQFP, Wire Bond	100

Table 9. MAX 3000A Devices (Part 2 of 2)

Device	Package	Pins
EPM3256A	TQFP, Wire Bond	144
	PQFP, Wire Bond	208
EPM3512A	PQFP, Wire Bond	208
	FBGA, Wire Bond, Option 1	256

HardCopy II Devices

Table 10 lists the device name, package type, and number of pins for the HardCopy II device family.

☞ The package type entries with "Option #" refer to instances where multiple package options exist for a given package type and pin count. The option number identifies the specific type used by the corresponding device density.

Table 10. HardCopy II Devices

Device	Package	Pins
HC210	FBGA, Wire Bond, A:2.40	484
HC220	Single-Piece Lid: FBGA, Flip Chip, Option 4	672
	Single-Piece Lid: FBGA, Flip Chip, Option 3	780
HC230	Single-Piece Lid: FBGA, Flip Chip, Option 2	1020
HC240	Single-Piece Lid: FBGA, Flip Chip, Option 2	1020
	Single-Piece Lid: FBGA, Flip Chip, Option 2	1508

HardCopy Devices

Table 11 lists the device name, package type, and number of pins for the HardCopy device family.

☞ The package type entries with "Option #" refer to instances where multiple package options exist for a given package type and pin count. The option number identifies the specific type used by the corresponding device density.

Table 11. HardCopy Devices

Device	Package	Pins
HC1S25	FBGA, Wire Bond, A:2.40	672
	BGA, Wire Bond	672
HC1S30	Dual-Piece Lid: FBGA, Flip Chip, Option 1	780
HC1S40	Dual-Piece Lid: FBGA, Flip Chip, Option 1	780
HC1S60	Dual-Piece Lid: FBGA, Flip Chip, Option 1	1020
HC1S80	Dual-Piece Lid: FBGA, Flip Chip, Option 1	1020

HardCopy APEX Devices

Table 12 lists the device name, package type, and number of pins for the HardCopy APEX device family.

☞ The package type entries with "Option #" refer to instances where multiple package options exist for a given package type and pin count. The option number identifies the specific type used by the corresponding device density.

Table 12. HardCopy APEX Devices

Device	Package	Pins
HC20K400	BGA, Wire Bond, Option 3	652
HC20K600	BGA, Wire Bond, Option 3	652
	Dual-Piece Lid: FBGA, Flip Chip, Option 1	672

APEX II Devices

Table 13 lists the device name, package type, and number of pins for the APEX II device family.

☞ The package type entries with "Option #" refer to instances where multiple package options exist for a given package type and pin count. The option number identifies the specific type used by the corresponding device density.

Table 13. APEX II Devices

Device	Package	Pins
EP2A15	Dual-Piece Lid: FBGA, Flip Chip, Option 1	672
	Dual-Piece Lid: BGA, Flip Chip	724
EP2A25	Channel Lid: FBGA, Flip Chip, Option 1	672
	Dual-Piece Lid: BGA, Flip Chip	724
	Dual-Piece Lid: FBGA, Flip Chip, Option 1	1020
EP2A40	Channel Lid: FBGA, Flip Chip, Option 1	672
	Dual-Piece Lid: BGA, Flip Chip	724
	Dual-Piece Lid: FBGA, Flip Chip, Option 1	1020
EP2A70	Dual-Piece Lid: BGA, Flip Chip	724
	Dual-Piece Lid: FBGA, Flip Chip, Option 1	1508

APEX 20KE Devices

Table 14 lists the device name, package type, and number of pins for the APEX 20KE device family.

☞ The package type entries with "Option #" refer to instances where multiple package options exist for a given package type and pin count. The option number identifies the specific type used by the corresponding device density.

Table 14. APEX 20KE Devices (Part 1 of 2)

Device	Package	Pins
EP20K30E	FBGA, Wire Bond	144
	TQFP, Wire Bond	144
	PQFP, Wire Bond	208
	FBGA, Wire Bond, Option 1	324
EP20K60E	FBGA, Wire Bond	144
	TQFP, Wire Bond	144
	PQFP, Wire Bond	208
	PQFP, Wire Bond	240
	FBGA, Wire Bond, Option 1	324
	BGA, Wire Bond	356

Table 14. APEX 20KE Devices (Part 2 of 2)

Device	Package	Pins
EP20K100E	FBGA, Wire Bond	144
	TQFP, Wire Bond	144
	PQFP, Wire Bond	208
	PQFP, Wire Bond	240
	FBGA, Wire Bond, Option 1	324
	BGA, Wire Bond	356
EP20K160E	TQFP, Wire Bond	144
	PQFP, Wire Bond	208
	PQFP, Wire Bond	240
	BGA, Wire Bond	356
	FBGA, Wire Bond, Option 2	484
EP20K200E	PQFP, Wire Bond	208
	PQFP, Wire Bond	240
	BGA, Wire Bond	356
	FBGA, Wire Bond, Option 2	484
	BGA, Wire Bond, Option 2	652
	FBGA, Wire Bond, Option 2	672
EP20K300E	PQFP, Wire Bond	240
	BGA, Wire Bond, Option 2	652
	FBGA, Wire Bond, Option 2	672
EP20K400E	BGA, Wire Bond, Option 3	652
	FBGA, Flip Chip, Option 1	672
EP20K600E	BGA, Wire Bond, Option 3	652
	FBGA, Flip Chip, Option 1	672
	FBGA, Flip Chip, Option 1	1020
EP20K1000E	BGA, Flip Chip	652
	FBGA, Flip Chip, Option 1	672
	FBGA, Flip Chip, Option 1	1020
EP20K1500E	BGA, Flip Chip	652
	FBGA, Flip Chip, Option 1	1020

APEX 20KC Devices

Table 15 lists the device name, package type, and number of pins for the APEX 20KC device family.

☞ The package type entries with "Option #" refer to instances where multiple package options exist for a given package type and pin count. The option number identifies the specific type used by the corresponding device density.

Table 15. APEX 20KC Devices

Device	Package	Pins
EP20K200C	PQFP, Wire Bond	208
	PQFP, Wire Bond	240
	BGA, Wire Bond	356
	FBGA, Wire Bond, Option 2	484
EP20K400C	BGA, Wire Bond, Option 3	652
	FBGA, Flip Chip, Option 1	672
EP20K600C	BGA, Wire Bond, Option 3	652
	FBGA, Flip Chip, Option 1	672
	FBGA, Flip Chip, Option 1	1020
EP20K1000C	BGA, Flip Chip	652
	FBGA, Flip Chip, Option 1	672
	FBGA, Flip Chip, Option 1	1020

APEX 20K Devices

Table 16 lists the device name, package type, and number of pins for the APEX 20K device family.

☞ The package type entries with "Option #" refer to instances where multiple package options exist for a given package type and pin count. The option number identifies the specific type used by the corresponding device density.

Table 16. APEX 20K Devices (Part 1 of 2)

Device	Package	Pins
EP20K100	TQFP, Wire Bond	144
	PQFP, Wire Bond	208
	PQFP, Wire Bond	240
	FBGA, Wire Bond, Option 1	324
	BGA, Wire Bond	356
EP20K160	PQFP, Wire Bond	240
	TQFP, Wire Bond	144

Table 16. APEX 20K Devices (Part 2 of 2)

Device	Package	Pins
EP20K200	PQFP, Wire Bond	208
	PQFP, Wire Bond	240
	BGA, Wire Bond	356
	FBGA, Wire Bond, Option 2	484
EP20K300	FBGA, Wire Bond, Option 2	672
EP20K400	BGA, Wire Bond, Option 3	652
	PGA, Wire Bond	655
	FBGA, Flip Chip, Option 1	672

ACEX 1K Devices

Table 17 lists the device name, package type, and number of pins for the ACE 1K device family.

☞ The package type entries with "Option #" refer to instances where multiple package options exist for a given package type and pin count. The option number identifies the specific type used by the corresponding device density.

Table 17. ACEX 1K Devices

Device	Package	Pins
EP1K10	TQFP, Wire Bond	100
	TQFP, Wire Bond	144
	PQFP, Wire Bond	208
	FBGA, Wire Bond, Option 1	256
EP1K30	TQFP, Wire Bond	144
	PQFP, Wire Bond	208
	FBGA, Wire Bond, Option 1	256
EP1K50	TQFP, Wire Bond	144
	PQFP, Wire Bond	208
	FBGA, Wire Bond, Option 1	256
	FBGA, Wire Bond, Option 2	484
EP1K100	PQFP, Wire Bond	208
	FBGA, Wire Bond, Option 1	256
	FBGA, Wire Bond, Option 2	484

Mercury Devices

Table 18 lists the device name, package type, and number of pins for the Mercury device family.

☞ The package type entries with "Option #" refer to instances where multiple package options exist for a given package type and pin count. The option number identifies the specific type used by the corresponding device density.

Table 18. Mercury Devices

Device	Package	Pins
EP1M120	Dual-Piece Lid: FBGA, Flip Chip, Option 1	484
EP1M350	Dual-Piece Lid: FBGA, Flip Chip, Option 1	780

FLEX 10KA Devices

Table 19 lists the device name, package type, and number of pins for the FLEX 10KA device family.

☞ The package type entries with "Option #" refer to instances where multiple package options exist for a given package type and pin count. The option number identifies the specific type used by the corresponding device density.

Table 19. FLEX 10KA Devices

Device	Package	Pins
EPF10K10A	TQFP, Wire Bond	100
	TQFP, Wire Bond	144
	PQFP, Wire Bond	208
	FBGA, Wire Bond, Option 1	256
EPF10K30A	TQFP, Wire Bond	144
	PQFP, Wire Bond	208
	PQFP, Wire Bond	240
	FBGA, Wire Bond, Option 1	256
	BGA, Wire Bond	356
	FBGA, Wire Bond, Option 2	484
EPF10K100A	RQFP, Wire Bond	240
	BGA, Wire Bond	356
	FBGA, Wire Bond, Option 2	484
	BGA, Wire Bond	600
EPF10K250A	PGA, Wire Bond	599
	BGA, Wire Bond	600

FLEX 10KS Devices

Table 20 lists the device name, package type, and number of pins for the FLEX 10KS device family.

The package type entries with "Option #" refer to instances where multiple package options exist for a given package type and pin count. The option number identifies the specific type used by the corresponding device density.

Table 20. FLEX 10KS Devices

Device	Package	Pins
EPF10K50S	TQFP, Wire Bond	144
	PQFP, Wire Bond	208
	PQFP, Wire Bond	240
	FBGA, Wire Bond, Option 1	256
	BGA, Wire Bond	356
	FBGA, Wire Bond, Option 2	484
EPF10K200S	RQFP, Wire Bond	240
	BGA, Wire Bond	356
	FBGA, Wire Bond, Option 2	484
	BGA, Wire Bond	600
	FBGA, Wire Bond, Option 2	672

FLEX 10KE Devices

Table 21 lists the device name, package type, and number of pins for the FLEX 10KE device family.

The package type entries with "Option #" refer to instances where multiple package options exist for a given package type and pin count. The option number identifies the specific type used by the corresponding device density.

Table 21. FLEX 10KE Devices (Part 1 of 3)

Device	Package	Pins
EPF10K30E	TQFP, Wire Bond	144
	PQFP, Wire Bond	208
	FBGA, Wire Bond, Option 1	256
	FBGA, Wire Bond, Option 2	484
EPF10K50E	TQFP, Wire Bond	144
	PQFP, Wire Bond	208
	PQFP, Wire Bond	240
	FBGA, Wire Bond, Option 1	256
	BGA, Wire Bond	356
	FBGA, Wire Bond, Option 2	484

Table 21. FLEX 10KE Devices (Part 2 of 3)

Device	Package	Pins
EPF10K100E	PQFP, Wire Bond	208
	PQFP, Wire Bond	240
	FBGA, Wire Bond, Option 1	256
	BGA, Wire Bond	356
	FBGA, Wire Bond, Option 2	484
EPF10K130E	PQFP, Wire Bond	240
	BGA, Wire Bond	356
	FBGA, Wire Bond, Option 2	484
	BGA, Wire Bond	600
	FBGA, Wire Bond, Option 2	672
EPF10K200E	PGA, Wire Bond	599
	BGA, Wire Bond	600
	FBGA, Wire Bond, Option 2	672
EPF10K10	PLCC, Wire Bond	84
	TQFP, Wire Bond	144
	PQFP, Wire Bond	208
EPF10K20	TQFP, Wire Bond	144
	RQFP, Wire Bond	208
	RQFP, Wire Bond	240
EPF10K30	RQFP, Wire Bond	208
	RQFP, Wire Bond	240
	BGA, Wire Bond	356
EPF10K40	RQFP, Wire Bond	208
	RQFP, Wire Bond	240
EPF10K50	RQFP, Wire Bond	240
	BGA, Wire Bond	356
	PGA, Wire Bond	403
EPF10K50V	RQFP, Wire Bond	240
	PQFP, Wire Bond	240
	BGA, Wire Bond	356
	FBGA, Wire Bond	484
EPF10K70	RQFP, Wire Bond	240
	PGA, Wire Bond	503
EPF10K100	PGA, Wire Bond	503
EPF10K130V	PGA, Wire Bond	599
	BGA, Wire Bond	600
EPF6010A	TQFP, Wire Bond	100
	TQFP, Wire Bond	144
	PQFP, Wire Bond	208

Table 21. FLEX 10KE Devices (Part 2 of 3)

Device	Package	Pins
EPF10K100E	PQFP, Wire Bond	208
	PQFP, Wire Bond	240
	FBGA, Wire Bond, Option 1	256
	BGA, Wire Bond	356
	FBGA, Wire Bond, Option 2	484
EPF10K130E	PQFP, Wire Bond	240
	BGA, Wire Bond	356
	FBGA, Wire Bond, Option 2	484
	BGA, Wire Bond	600
	FBGA, Wire Bond, Option 2	672
EPF10K200E	PGA, Wire Bond	599
	BGA, Wire Bond	600
	FBGA, Wire Bond, Option 2	672
EPF10K10	PLCC, Wire Bond	84
	TQFP, Wire Bond	144
	PQFP, Wire Bond	208
EPF10K20	TQFP, Wire Bond	144
	RQFP, Wire Bond	208
	RQFP, Wire Bond	240
EPF10K30	RQFP, Wire Bond	208
	RQFP, Wire Bond	240
	BGA, Wire Bond	356
EPF10K40	RQFP, Wire Bond	208
	RQFP, Wire Bond	240
EPF10K50	RQFP, Wire Bond	240
	BGA, Wire Bond	356
	PGA, Wire Bond	403
EPF10K50V	RQFP, Wire Bond	240
	PQFP, Wire Bond	240
	BGA, Wire Bond	356
	FBGA, Wire Bond	484
EPF10K70	RQFP, Wire Bond	240
	PGA, Wire Bond	503
EPF10K100	PGA, Wire Bond	503
EPF10K130V	PGA, Wire Bond	599
	BGA, Wire Bond	600
EPF6010A	TQFP, Wire Bond	100
	TQFP, Wire Bond	144
	PQFP, Wire Bond	208

Table 21. FLEX 10KE Devices (Part 3 of 3)

Device	Package	Pins
EPF6016	TQFP, Wire Bond	144
	PQFP, Wire Bond	208
	PQFP, Wire Bond	240
	BGA, Wire Bond, Option 2	256
EPF6016A	TQFP, Wire Bond	100
	FBGA, Wire Bond	100
	TQFP, Wire Bond	144
	PQFP, Wire Bond	208
	FBGA, Wire Bond, Option 1	256
EPF6024A	TQFP, Wire Bond	144
	PQFP, Wire Bond	208
	PQFP, Wire Bond	240
	BGA, Wire Bond, Option 2	256
	FBGA, Wire Bond, Option 1	256
EPF8282A	PLCC, Wire Bond	84
	TQFP, Wire Bond	100
EPF8452A	TQFP, Wire Bond	100
	PQFP, Wire Bond	160

Excalibur Devices

Table 22 lists the device name, package type, and number of pins for the Excalibur device family.

The package type entries with "Option #" refer to instances where multiple package options exist for a given package type and pin count. The option number identifies the specific type used by the corresponding device density.

Table 22. Excalibur Devices

Device	Package	Pins
EPXA1	FBGA, Wire Bond, Option 2	484
	Dual-Piece Lid: FBGA, Flip Chip, Option 1	672
EPXA4	Dual-Piece Lid: FBGA, Flip Chip, Option 1	672
	Dual-Piece Lid: FBGA, Flip Chip, Option 1	1020
EPXA10	Dual-Piece Lid: FBGA, Flip Chip, Option 1	1020

Configuration Devices

Table 23 lists the device name, package type, and number of pins for the Configuration device family.

The package type entries with "Option #" refer to instances where multiple package options exist for a given package type and pin count. The option number identifies the specific type used by the corresponding device density.

Table 23. Configuration Devices

Device	Package	Pins
EPC1	PDIP, Wire Bond	8
	PLCC, Wire Bond	20
EPC2	PLCC, Wire Bond	20
	TQFP, Wire Bond	32
EPC1064	PDIP, Wire Bond	8
	PLCC, Wire Bond	20
EPC1213	PDIP, Wire Bond	8
	PLCC, Wire Bond	20
EPC1441	PDIP, Wire Bond	8
	PLCC, Wire Bond	20
	TQFP, Wire Bond	32

Enhanced Configuration Devices

Table 24 lists the device name, package type, and number of pins for the Enhanced configuration device family.

The package type entries with "Option #" refer to instances where multiple package options exist for a given package type and pin count. The option number identifies the specific type used by the corresponding device density.

Table 24. Enhanced Configuration Devices

Device	Package	Pins
EPC4	PQFP, Wire Bond	100
EPC8	PQFP, Wire Bond	100
EPC16	UBGA, Wire Bond	88
	PQFP, Wire Bond	100

Thermal Resistance

Altera follows JEDEC JESD51 series standards to provide thermal resistances. The purpose of the JESD51 standards is to compare the thermal performance of various packages under standardized test conditions. While standardized thermal resistances can help compare the relative thermal performance of different packages, they cannot apply directly to the many specific applications because JESD51 test conditions may not match a specific application. Several factors affect the thermal performance of a device in a user's application. These include power dissipation in the component; airflow velocity, direction and turbulence level; power in adjacent components; two-sided vs. one-sided active component mounting; printed circuit board (PCB) orientation & construction; and adjacent boards and their power dissipation. It may be necessary to test or model specific applications. This testing and modeling of a component user's specific applications is the user's responsibility.

Table 26 through Table 43 provide θ_{JA} (junction-to-ambient thermal resistance) and θ_{JC} (junction-to-case thermal resistance) values for the Altera device families. Altera reserves the right to make changes to thermal resistances without notice in the future.

Table 25 lists the mature Altera devices and the associated table locations.

Table 25. Thermal Resistance

Altera Device	Table Location
Arria series FPGAs	■ Arria GX Devices: Table 26 on page 24
Stratix series FPGAs	■ Stratix II Devices: Table 27 on page 25 ■ Stratix Devices: Table 28 on page 26
Cyclone series FPGAs	■ Cyclone II Devices: Table 29 on page 27 ■ Cyclone Devices: Table 30 on page 28
MAX series CPLDs	■ MAX 9000 Devices: Table 31 on page 29 ■ MAX 7000 Devices: Table 32 on page 30 ■ MAX 3000A Devices: Table 33 on page 33
HardCopy series ASICs	■ HardCopy II Devices: Table 34 on page 34 ■ HardCopy Devices: Table 35 on page 34
APEX series FPGAs	■ APEX II Devices: Table 36 on page 35 ■ APEX 20K: Table 37 on page 36
ACEX 1K FPGAs	ACEX 1K Devices: Table 38 on page 38
Mercury FPGAs	Mercury Devices: Table 39 on page 39
FLEX series FPGAs	■ FLEX 10K Devices: Table 40 on page 39 ■ FLEX 8000 Devices: Table 41 on page 41 ■ FLEX 6000 Devices: Table 42 on page 42
Excalibur FPGAs	Excalibur Devices: Table 43 on page 43

Altera is transitioning to an industry-standard copper lid for its thermally enhanced BGA and thermally enhanced Flip Chip FBGA package offerings.

For more information, refer to *Process Change Notice PCN0214*.

This change affects the APEX 20KE, APEX 20KC, APEX II, Mercury, and Excalibur device families. Therefore, two thermal resistance specifications are provided for devices affected by this change. The older packages are identified as using the aluminum silicon carbide (AlSiC) lid, while the newer packages are identified as using the copper (Cu) lid.

Thermally enhanced BGA and thermally enhanced Flip Chip FBGA packages offered in the newer Altera families, including Stratix and Stratix GX, were introduced using an industry-standard Cu lid. Therefore, these device specifications include only a single thermal resistance specification.

☞ Contact Altera if you need typical +/– values of A dimensions for thermal analysis. The max numbers are provided for physical layout.

Arria Series Devices Thermal Resistance

Table 26 provides thermal resistance values for Arria series devices.

Arria GX Devices

Table 26 lists the thermal resistance of Arria GX devices.

Table 26. Thermal Resistance of Arria GX Devices

Device	Package	Pin Count	θ_{JA} (° C/W) Still Air	θ_{JA} (° C/W) 100 ft./min.	θ_{JA} (° C/W) 200 ft./min.	θ_{JA} (° C/W) 400 ft./min.	θ_{JC} (° C/W)	θ_{JB} (° C/W)
EP1AGX20	FBGA	484	12.8	10.3	8.7	7.5	0.3	3.1
	FBGA	780	11.1	8.6	7.2	6.0	0.2	3.1
EP1AGX35	FBGA	484	12.8	10.3	8.7	7.5	0.3	3.1
	FBGA	780	11.1	8.6	7.2	6.0	0.2	3.1
EP1AGX50	FBGA	484	12.7	10.2	8.6	7.3	0.2	2.9
	FBGA	780	10.9	8.4	6.9	5.8	0.2	2.9
	FBGA	1152	9.9	7.5	6.1	5.0	0.2	2.5
EP1AGX60	FBGA	484	12.7	10.2	8.6	7.3	0.2	2.9
	FBGA	780	10.9	8.4	6.9	5.8	0.2	2.8
	FBGA	1152	9.9	7.5	6.1	5.0	0.2	2.5
EP1AGX90	FBGA	1152	9.6	7.3	5.9	4.9	0.1	2.3

Stratix Series Devices Thermal Resistance

Table 27 to Table 28 provide thermal resistance values for Stratix series devices.

Stratix II Devices

Table 27 lists the thermal resistance of Stratix II devices.

Table 27. Thermal Resistance of Stratix II Devices (Part 1 of 2)

Device	Package	Pin Count	θ_{JC} (° C/W)	θ_{JA} (° C/W) Still Air	θ_{JA} (° C/W) 100 ft./min.	θ_{JA} (° C/W) 200 ft./min.	θ_{JA} (° C/W) 400 ft./min.	θ_{JB} (° C/W)
EP2S15	FBGA, Flip Chip	484	0.4	13.1	11.1	9.6	8.3	4.2
	FBGA, Flip Chip	672	0.4	12.2	10.2	8.8	7.6	4.1
EP2S30	FBGA, Flip Chip	484	0.2	12.6	10.6	9.1	7.9	3.7
	FBGA, Flip Chip	672	0.2	11.7	9.7	8.3	7.1	3.4
EP2S60	FBGA, Flip Chip	484	0.1	12.3	10.3	8.8	7.5	3.4
	FBGA, Flip Chip	672	0.1	11.4	9.4	7.8	6.7	3.0
	FBGA, Flip Chip	1020	0.1	10.4	8.4	7.0	5.9	2.7
EP2S90	HBGA, Flip Chip	484	0.1	12.0	9.9	8.3	7.1	3.7
	FBGA, Flip Chip	780	0.1	10.8	8.8	7.3	6.1	2.6
	FBGA, Flip Chip	1020	0.1	10.2	8.2	6.8	5.7	2.4
	FBGA, Flip Chip	1508	0.1	9.3	7.4	6.1	5.0	2.2
EP2S130	FBGA, Flip Chip	780	0.1	10.1	8.7	7.2	6.0	2.4
	FBGA, Flip Chip	1020	0.1	9.5	8.1	6.7	5.5	2.2
	FBGA, Flip Chip	1508	0.1	8.6	7.3	6.0	4.8	2.1
EP2S180	FBGA, Flip Chip	1020	0.1	9.0	7.9	6.5	5.4	2.1
	FBGA, Flip Chip	1508	0.1	8.1	7.1	5.8	4.7	1.9
EP2SGX30	FBGA, Flip Chip	780	0.2	11.1	8.6	7.2	6.0	3.1
EP2SGX60	FBGA, Flip Chip	780	0.2	10.9	8.4	6.9	5.8	2.8
	FBGA, Flip Chip	1152	0.2	9.9	7.5	6.1	5.0	2.5

Table 27. Thermal Resistance of Stratix II Devices (Part 2 of 2)

Device	Package	Pin Count	θ_{JC} (° C/W)	θ_{JA} (° C/W) Still Air	θ_{JA} (° C/W) 100 ft./min.	θ_{JA} (° C/W) 200 ft./min.	θ_{JA} (° C/W) 400 ft./min.	θ_{JB} (° C/W)
EP2SGX90	FBGA, Flip Chip	1152	0.1	9.6	7.3	5.9	4.9	2.3
	FBGA, Flip Chip	1508	0.1	9.0	6.7	5.4	4.4	1.9
EP2SGX130	FBGA, Flip Chip	1508	0.1	8.3	6.6	5.3	4.3	1.8

Stratix Devices

Table 28 lists the thermal resistance of Stratix devices.

Table 28. Thermal Resistance of Stratix Devices (Part 1 of 2)

Device	Package	Pin Count	θ_{JC} (° C/W)	θ_{JA} (° C/W) Still Air	θ_{JA} (° C/W) 100 ft./min.	θ_{JA} (° C/W) 200 ft./min.	θ_{JA} (° C/W) 400 ft./min.
EP1SGX10C EP1SGX10D	FBGA, Flip Chip	672	0.4	11.1	9.1	7.7	6.5
EP1SGX25C EP1SGX25D	FBGA, Flip Chip	672	0.2	10.8	8.8	7.4	6.2
EP1SGX25D EP1SGX25F	FBGA, Flip Chip	1020	0.2	9.9	7.9	6.5	5.4
EP1SGX40D EP1SGX40G	FBGA, Flip Chip	1020	0.2	9.8	7.7	6.4	5.3
EP1S10	FBGA, Flip Chip	484	0.4	11.9	9.8	8.4	7.2
	BGA	672	3.2	16.8	13.7	11.9	10.5
	FBGA	672	3.4	17.2	14.0	12.2	10.8
	FBGA, Flip Chip	780	0.4	10.9	8.8	7.4	6.3
EP1S20	FBGA, Flip Chip	484	0.3	11.8	9.7	8.3	7.1
	BGA	672	2.5	15.5	12.4	10.7	9.3
	FBGA	672	2.7	16.0	12.8	11.0	9.6
	FBGA, Flip Chip	780	0.3	10.7	8.6	7.2	6.1
EP1S25	BGA	672	2.2	14.8	11.7	10.0	8.7
	FBGA	672	2.3	15.3	12	10.4	9.0
	FBGA, Flip Chip	780	0.3	10.5	8.5	7.1	6.0
	FBGA, Flip Chip	1020	0.3	10.0	8.0	6.6	5.5

Table 28. Thermal Resistance of Stratix Devices (Part 2 of 2)

Device	Package	Pin Count	θ_{JC} (° C/W)	θ_{JA} (° C/W) Still Air	θ_{JA} (° C/W) 100 ft./min.	θ_{JA} (° C/W) 200 ft./min.	θ_{JA} (° C/W) 400 ft./min.
EP1S30	FBGA, Flip Chip	780	0.2	10.4	8.4	7.0	5.9
	BGA, Flip Chip	956	0.2	9.1	7.1	5.8	4.8
	FBGA, Flip Chip	1020	0.2	9.9	7.9	6.5	5.4
EP1S40	FBGA, Flip Chip	780	0.2	10.4	8.3	6.9	5.8
	BGA, Flip Chip	956	0.2	9.0	7.0	5.7	4.7
	FBGA, Flip Chip	1020	0.2	9.8	7.8	6.4	5.3
	FBGA, Flip Chip	1508	0.2	9.1	7.1	5.8	4.7
EP1S60	BGA, Flip Chip	956	0.1	8.9	6.9	5.6	4.6
	FBGA, Flip Chip	1020	0.1	9.7	7.7	6.3	5.2
	FBGA, Flip Chip	1508	0.1	8.9	7.0	5.6	4.6
EP1S80	BGA, Flip Chip	956	0.1	8.8	6.8	5.5	4.5
	FBGA, Flip Chip	1020	0.1	9.6	7.6	6.2	5.1
	FBGA, Flip Chip	1508	0.1	8.8	6.9	5.5	4.5

Cyclone Series Devices Thermal Resistance

Table 29 to Table 30 provide thermal resistance values for Cyclone series devices.

Cyclone II Devices

Table 29 lists the thermal resistance of Cyclone II devices.

Table 29. Thermal Resistance of Cyclone II Devices (Part 1 of 2)

Device	Package	Pin Count	θ_{JC} (° C/W)	θ_{JA} (° C/W) Still Air	θ_{JA} (° C/W) 100 ft./min.	θ_{JA} (° C/W) 200 ft./min.	θ_{JA} (° C/W) 400 ft./min.
EP2C5	TQFP, Wire Bond	144	10.0	31.0	29.3	27.9	25.5
	PQFP, Wire Bond	208	5.5	30.4	29.2	27.3	22.3
	FBGA, Wire Bond	256	8.7	30.2	26.1	23.6	21.7

Table 29. Thermal Resistance of Cyclone II Devices (Part 2 of 2)

Device	Package	Pin Count	θ_{JC} (° C/W)	θ_{JA} (° C/W) Still Air	θ_{JA} (° C/W) 100 ft./min.	θ_{JA} (° C/W) 200 ft./min.	θ_{JA} (° C/W) 400 ft./min.
EP2C8	TQFP, Wire Bond	144	9.9	29.8	28.3	26.9	24.9
	PQFP, Wire Bond	208	5.4	30.2	28.8	26.9	21.7
	FBGA, Wire Bond	256	7.1	27.0	23.0	20.5	18.5
EP2C15	FBGA, Wire Bond	256	5.5	24.2	20.0	17.8	16.0
	FBGA, Wire Bond	484	4.2	21.0	17.0	14.8	13.1
EP2C20	PQFP, Wire Bond	240	4.2	26.6	24.0	21.4	17.4
	FBGA, Wire Bond	256	5.5	24.2	20.0	17.8	16.0
	FBGA, Wire Bond	484	4.2	21.0	17.0	14.8	13.1
EP2C35	FBGA, Wire Bond	484	3.3	19.4	15.4	13.3	11.7
	UBGA, Wire Bond	484	5.0	20.6	16.6	14.5	12.8
	FBGA, Wire Bond	672	3.1	18.6	14.6	12.6	11.1
EP2C50	FBGA, Wire Bond	484	2.8	18.4	14.4	12.4	10.9
	UBGA, Wire Bond	484	4.4	19.6	15.6	13.6	11.9
	FBGA, Wire Bond	672	2.6	17.7	13.7	11.8	10.2
EP2C70	FBGA, Wire Bond	672	2.2	16.9	13.0	11.1	9.7
	FBGA, Wire Bond	896	2.1	16.3	11.9	10.5	9.1

Cyclone Devices

Table 30 lists the thermal resistance of Cyclone devices.

Table 30. Thermal Resistance of Cyclone Devices (Part 1 of 2)

Device	Package	Pin Count	θ_{JC} (° C/W)	θ_{JA} (° C/W) Still Air	θ_{JA} (° C/W) 100 ft./min.	θ_{JA} (° C/W) 200 ft./min.	θ_{JA} (° C/W) 400 ft./min.
EP1C3	TQFP	100	11.0	37.5	35.4	33.4	29.8
	TQFP	144	10.0	31.1	29.4	27.9	25.5
EP1C6	TQFP	144	9.8	29.4	28.0	26.7	24.7
	PQFP	240	4.3	27.2	24.7	22.1	17.8
	FBGA	256	8.8	28.7	24.5	22.3	20.5

Table 30. Thermal Resistance of Cyclone Devices (Part 2 of 2)

Device	Package	Pin Count	θ_{JC} (° C/W)	θ_{JA} (° C/W) Still Air	θ_{JA} (° C/W) 100 ft./min.	θ_{JA} (° C/W) 200 ft./min.	θ_{JA} (° C/W) 400 ft./min.
EP1C12	PQFP	240	4.0	26.0	23.4	20.8	17.1
	FBGA	256	6.6	24.3	20.2	18.1	16.4
	FBGA	324	6.1	23.0	19.8	17.7	16.1
EP1C20	FBGA	324	5.0	21.0	17.7	15.6	14.1
	FBGA	400	4.7	20.7	17.5	15.5	13.9

MAX Series Devices Thermal Resistance

Table 31 through Table 33 provide thermal resistance values for MAX series devices.

MAX 9000 Devices

Table 31 lists the thermal resistance of MAX 9000 devices.

Table 31. Thermal Resistance of MAX 9000 Devices

Device	Package	Pin Count	θ_{JC} (° C/W)	θ_{JA} (° C/W) Still Air	θ_{JA} (° C/W) 100 ft./min.	θ_{JA} (° C/W) 200 ft./min.	θ_{JA} (° C/W) 400 ft./min.
EPM9320	PLCC	84	9.0	29.0	27.0	25.0	23.0
	RQFP	208	1.0	17.0	16.0	15.0	13.0
	PGA	280	2.0	14.0	10.0	7.0	5.0
	BGA	356	2.0	14.0	12.0	11.0	10.0
EPM9320A	PLCC	84	9.0	29.0	27.0	26.0	23.0
	RQFP	208	2.0	17.0	16.0	15.0	13.0
	BGA	356	1.0	12.0	11.0	10.0	9.0
EPM9400	PLCC	84	9.0	29.0	27.0	25.0	23.0
	RQFP	208	1.0	17.0	16.0	15.0	13.0
	RQFP	240	1.0	14.0	12.0	11.0	10.0
EPM9480	RQFP	208	1.0	17.0	16.0	15.0	12.0
	RQFP	240	1.0	12.0	11.0	10.0	9.0
EPM9560	RQFP	208	1.0	17.0	16.0	15.0	12.0
	RQFP	240	1.0	12.0	11.0	10.0	9.0
	BGA	356	1.0	12.0	11.0	10.0	9.0
EPM9560A	RQFP	208	1.0	17.0	16.0	15.0	12.0
	RQFP	240	1.0	11.0	10.0	9.0	8.0
	BGA	356	1.0	12.0	11.0	10.0	9.0

MAX 7000 Devices

Table 32 lists the thermal resistance of MAX 7000 devices.

Table 32. Thermal Resistance of MAX 7000 Devices (Part 1 of 3)

Device	Package	Pin Count	θ_{JC} (° C/W)	θ_{JA} (° C/W) Still Air	θ_{JA} (° C/W) 100 ft./min.	θ_{JA} (° C/W) 200 ft./min.	θ_{JA} (° C/W) 400 ft./min.
EPM7032	PLCC	44	10.0	33.0	31.0	30.0	27.0
	PQFP		15.0	48.0	46.0	45.0	42.0
	TQFP		14.0	46.0	44.0	43.0	40.0
EPM7032B	PLCC	44	10.0	33.0	31.0	30.0	27.0
	TQFP		14.0	46.0	44.0	43.0	40.0
	UBGA	49	23.0	69.0	67.0	66.0	62.0
EPM7032S	PLCC	44	10.0	33.0	31.0	30.0	27.0
	TQFP		14.0	46.0	44.0	43.0	40.0
EPM7032V	PLCC	44	9.0	31.0	30.0	28.0	25.0
	TQFP		14.0	45.0	44.0	42.0	39.0
EPM7032AE	PLCC	44	9.0	31.0	30.0	28.0	25.0
	TQFP		14.0	46.0	45.0	43.0	40.0
EPM7064S	PLCC	44	9.0	31.0	30.0	28.0	25.0
	TQFP		14.0	46.0	44.0	43.0	40.0
	PLCC	84	9.0	28.0	26.0	25.0	23.0
	TQFP	100	11.0	39.0	37.0	35.0	32.0
EPM7064	PLCC	44	9.0	31.0	30.0	28.0	25.0
	TQFP		13.0	44.0	43.0	41.0	38.0
	PLCC	84	9.0	28.0	26.0	25.0	22.0
	PQFP	100	6.0	33.0	32.0	31.0	30.0
EPM7064AE EPM7064B	PLCC	44	9.0	31.0	30.0	28.0	25.0
	TQFP		14.0	46.0	45.0	43.0	40.0
	UBGA	49	23.0	56.0	53.0	51.0	47.0
	TQFP	100	12.0	39.0	37.0	35.0	31.0
	FBGA		21.0	49.0	47.0	44.0	40.0
EPM7096	PLCC	68	9.0	29.0	27.0	26.0	23.0
	PLCC	84	9.0	28.0	26.0	24.0	22.0
EPM7128A	PLCC	84	9.0	28.0	26.0	25.0	22.0
	TQFP	100	11.0	37.0	35.0	33.0	30.0
	FBGA		18.0	44.0	42.0	39.0	35.0
	TQFP	144	9.0	31.0	29.0	28.0	25.0
	FBGA	256	12.0	38.0	36.0	34.0	31.0

Table 32. Thermal Resistance of MAX 7000 Devices (Part 2 of 3)

Device	Package	Pin Count	θ_{JC} (° C/W)	θ_{JA} (° C/W) Still Air	θ_{JA} (° C/W) 100 ft./min.	θ_{JA} (° C/W) 200 ft./min.	θ_{JA} (° C/W) 400 ft./min.
EPM7128B	UBGA	49	22.0	53.0	50.0	48.0	44.0
	TQFP	100	11.0	38.0	36.0	34.0	31.0
	FBGA		19.0	46.0	44.0	41.0	37.0
	TQFP	144	9.0	32.0	30.0	29.0	26.0
	UBGA	169	16.0	44.0	42.0	39.0	35.0
	FBGA	256	13.0	40.0	38.0	36.0	33.0
EPM7128E	PLCC	84	10.0	29.0	28.0	26.0	23.0
	PQFP	100	6.0	32.0	31.0	30.0	29.0
	PQFP	160	6.0	32.0	31.0	30.0	28.0
EPM7128S	PLCC	84	10.0	30.0	28.0	26.0	23.0
	TQFP	100	12.0	38.0	36.0	34.0	30.0
	PQFP		10.0	35.0	34.0	33.0	32.0
	PQFP	160	7.0	33.0	32.0	31.0	30.0
EPM7128AE	PLCC	84	11.0	30.0	28.0	26.0	23.0
	TQFP	100	12.0	38.0	36.0	34.0	30.0
	FBGA		14.0	43.0	40.0	38.0	37.0
	TQFP	144	11.0	33.0	30.0	28.0	26.0
	UBGA	169	14.0	42.0	40.0	38.0	36.0
	FBGA	256	12.0	39.0	37.0	35.0	31.0
EPM7160E	PLCC	84	10.0	29.0	28.0	26.0	23.0
	PQFP	100	6.0	32.0	31.0	30.0	29.0
	PQFP	160	6.0	33.0	32.0	31.0	30.0
EPM7160S	PLCC	84	10.0	35.0	28.0	26.0	23.0
	TQFP	100	12.0	37.0	35.0	33.0	30.0
	PQFP	160	6.0	33.0	32.0	31.0	30.0
EPM7192S	PQFP	160	6.0	32.0	31.0	30.0	29.0
EPM7192E	PGA	160	6.0	20.0	13.0	10.0	8.0
	PQFP		6.0	32.0	31.0	30.0	26.0
EPM7256A	TQFP	100	9.0	36.0	34.0	32.0	30.0
	TQFP	144	8.0	32.0	27.0	25.0	24.0
	PQFP	208	5.0	30.0	28.0	26.0	21.0
	FBGA	256	12.0	34.0	32.0	29.0	28.0
EPM7256B	TQFP	100	12.0	37.0	35.0	33.0	30.0
	TQFP	144	9.0	33.0	29.0	27.0	25.0
	UBGA	169	13.0	40.0	38.0	36.0	34.0
	PQFP	208	5.0	31.0	29.0	27.0	22.0
	FBGA	256	9.0	34.0	32.0	30.0	28.0

Table 32. Thermal Resistance of MAX 7000 Devices (Part 3 of 3)

Device	Package	Pin Count	θ_{JC} (° C/W)	θ_{JA} (° C/W) Still Air	θ_{JA} (° C/W) 100 ft./min.	θ_{JA} (° C/W) 200 ft./min.	θ_{JA} (° C/W) 400 ft./min.
EPM7256E	PGA	192	6.0	20.0	13.0	10.0	8.0
	PQFP	160	6.0	31.0	30.0	29.0	25.0
	RQFP	208	1.0	17.0	16.0	15.0	13.0
EPM7256S	PQFP	208	5.0	30.0	29.0	26.0	21.0
	RQFP		1.0	18.0	17.0	16.0	15.0
EPM7256AE	FBGA	100	13.0	42.0	39.0	37.0	36.0
	TQFP	100	12.0	37.0	35.0	33.0	30.0
	TQFP	144	9.0	33.0	29.0	27.0	25.0
	PQFP	208	5.0	31.0	29.0	27.0	22.0
	FBGA	256	9.0	34.0	32.0	30.0	28.0
EPM7512AE	TQFP	144	10.0	32.0	27.0	25.0	23.0
	PQFP	208	5.0	30.0	28.0	25.0	21.0
	BGA	256	1.2	14.0	12.0	11.0	10.0
	FBGA		11.0	32.0	30.0	28.0	22.0
EPM7512B	TQFP	144	10.0	32.0	27.0	25.0	24.0
	UBGA	169	12.0	35.0	33.0	31.0	30.0
	PQFP	208	5.0	30.0	28.0	25.0	21.0
	BGA	256	1.2	14.0	12.0	11.0	10.0
	FBGA	256	11.0	32.0	30.0	28.0	27.0

MAX 3000A Devices

Table 33 lists the thermal resistance of MAX 3000A devices.

Table 33. Thermal Resistance of MAX 3000A Devices

Device	Package	Pin Count	θ_{JC} (° C/W)	θ_{JA} (° C/W) Still Air	θ_{JA} (° C/W) 100 ft./min.	θ_{JA} (° C/W) 200 ft./min.	θ_{JA} (° C/W) 400 ft./min.
EPM3032A	TQFP	44	14.0	46.0	45.0	43.0	40.0
	PLCC		9.0	31.0	30.0	28.0	25.0
EPM3064A	TQFP	44	14.0	46.0	45.0	43.0	40.0
	PLCC		9.0	31.0	30.0	28.0	25.0
	TQFP	100	12.0	39.0	37.0	35.0	31.0
EPM3128A	TQFP	100	12.0	38.0	36.0	34.0	30.0
EPM3256A	TQFP	144	9.0	33.0	29.0	27.0	25.0
	PQFP	208	5.0	31.0	29.0	27.0	22.0
EPM3512A	PQFP	208	5.0	30.0	28.0	25.0	21.0
	FBGA	256	11.0	32.0	30.0	28.0	22.0

HardCopy Series Devices Thermal Resistance

Table 34 to Table 35 provide thermal resistance values for HardCopy series devices.

HardCopy II Devices

Table 34 lists the thermal resistance of HardCopy II devices.

Table 34. Thermal Resistance of HardCopy II Devices

Device	Package	Pin Count	θ_{JC} (° C/W)	θ_{JA} (° C/W) Still Air	θ_{JA} (° C/W) 100 ft./min.	θ_{JA} (° C/W) 200 ft./min.	θ_{JA} (° C/W) 400 ft./min.	θ_{JB} (° C/W)
HC210	FBGA, Wire Bond	484	5.5	21.3	17.4	15.3	13.8	9.6
HC220	FBGA, Flip Chip	672	0.5	12.1	9.9	8.3	7.1	3.6
	FBGA, Flip Chip	780	0.5	11.7	9.5	8.0	6.8	3.5
HC230	FBGA, Flip Chip	1020	0.3	10.8	8.6	7.1	6.0	2.9
HC240	FBGA, Flip Chip	1020	0.2	10.6	8.4	6.9	5.8	2.7
	FBGA, Flip Chip	1508	0.2	9.7	7.5	6.1	5.0	2.6

HardCopy Devices

Table 35 lists the thermal resistance of HardCopy devices.

Table 35. Thermal Resistance of HardCopy Devices

Device	Package	Pin Count	θ_{JC} (° C/W)	θ_{JA} (° C/W) Still Air	θ_{JA} (° C/W) 100 ft./min.	θ_{JA} (° C/W) 200 ft./min.	θ_{JA} (° C/W) 400 ft./min.
HC20K400	BGA, Flip Chip	652	0.5	9.1	7.9	6.4	5.3
HC20K600	FBGA, Flip Chip	672	1.0	13.0	10.2	8.6	7.3
HC1S25	FBGA, Wire Bond	672	3.7	19.7	15.8	13.9	12.4
	BGA, Wire Bond		3.4	19.3	15.6	13.8	12.3
HC1S30	FBGA, Flip Chip	780	0.4	10.9	8.8	7.4	6.3
HC1S40	FBGA, Flip Chip	780	0.4	10.9	8.8	7.4	6.3
HC1S60	FBGA, Flip Chip	1020	0.3	10.3	8.54	7.0	5.8
HC1S80	FBGA, Flip Chip	1020	0.3	10.3	8.54	7.0	5.8

APEX Series Devices Thermal Resistance

Table 36 to Table 37 list thermal resistance values for APEX series devices.

APEX II Devices

Table 36 lists the thermal resistance of APEX II devices.

Table 36. Thermal Resistance of APEX II Devices

Device	Package	Pin Count	θ_{JC} (° C/W)	θ_{JA} (° C/W) Still Air	θ_{JA} (° C/W) 100 ft./min.	θ_{JA} (° C/W) 200 ft./min.	θ_{JA} (° C/W) 400 ft./min.
EP2A15	FBGA, Flip Chip (Cu lid)	672	0.2	10.8	8.8	7.4	6.2
	FBGA, Flip Chip (AlSiC lid)		0.3	11.6	9.6	8.0	6.6
	BGA, Flip Chip (Cu lid)	724	0.2	9.7	7.7	6.4	5.3
	BGA, Flip Chip (AlSiC lid)		0.4	10.0	8.2	6.6	5.4
EP2A25	FBGA (Cu lid)	672	0.2	10.7	8.7	7.2	6.1
	FBGA, Flip Chip (AlSiC lid)		0.3	11.5	9.6	8.0	6.6
	BGA, Flip Chip (Cu lid)	724	0.2	9.6	7.6	6.2	5.2
	BGA, Flip Chip (AlSiC lid)		0.3	10.0	8.2	6.6	5.4
	FBGA, Flip Chip (Cu lid)	1020	0.2	9.8	7.8	6.4	5.3
	FBGA, Flip Chip (AlSiC lid)		0.3	10.4	8.5	6.9	5.7
EP2A40	FBGA, Flip Chip (Cu lid)	672	0.2	10.0	8.2	6.9	5.9
	FBGA, Flip Chip (AlSiC lid)		0.2	10.0	8.2	6.9	5.9
	BGA, Flip Chip (Cu lid)	724	0.2	9.5	7.5	6.1	5.1
	BGA, Flip Chip (AlSiC lid)		0.2	9.5	7.5	6.1	5.1
	FBGA, Flip Chip (Cu lid)	1020	0.2	9.7	7.7	6.3	5.2
	FBGA, Flip Chip (AlSiC lid)		0.2	9.7	7.7	6.3	5.2
EP2A70	BGA, Flip Chip (Cu lid)	724	0.1	9.3	7.3	6.0	4.9
	BGA, Flip Chip (AlSiC lid)		0.1	10.0	7.9	6.4	5.3
	FBGA, Flip Chip (Cu lid)	1508	0.1	8.8	6.8	5.5	4.5
	FBGA, Flip Chip (AlSiC lid)		0.1	9.3	7.3	5.8	4.7

APEX 20K Devices

Table 37 lists the thermal resistance of APEX 20KE, 20KC, and 20K devices.

Table 37. Thermal Resistance of APEX 20KE, 20KC, and 20K Devices (Part 1 of 3)

Device	Package	Pin Count	θ_{JC} (° C/W)	θ_{JA} (° C/W) Still Air	θ_{JA} (° C/W) 100 ft./min.	θ_{JA} (° C/W) 200 ft./min.	θ_{JA} (° C/W) 400 ft./min.
EP20K30E	TQFP	144	8.0	29.0	28.0	26.0	25.0
	PQFP	208	5.0	30.0	29.0	27.0	22.0
	FBGA	144	14.0	36.0	34.0	32.0	29.0
	FBGA	324	9.0	31.0	29.0	28.0	25.0
EP20K60E	TQFP	144	7.0	28.0	26.0	25.0	24.0
	FBGA	144	11.0	33.0	32.0	30.0	27.0
	PQFP	208	5.0	30.0	28.0	26.0	21.0
	PQFP	240	4.0	26.0	24.0	21.0	17.0
	FBGA	324	7.0	29.0	28.0	26.0	24.0
	BGA	356	1.0	12.0	11.0	10.0	9.0
EP20K100	TQFP	144	7.0	26.0	25.0	24.0	23.0
	PQFP	208	5.0	29.0	27.0	25.0	20.0
	PQFP	240	4.0	25.0	23.0	20.0	17.0
	FBGA	324	6.0	28.0	26.0	25.0	23.0
	BGA	356	1.0	12.0	11.0	10.0	9.0
EP20K100E	TQFP	144	7.0	26.0	25.0	24.0	23.0
	FBGA	144	9.0	32.0	30.0	29.0	26.0
	PQFP	208	5.0	29.0	27.0	25.0	20.0
	PQFP	240	4.0	25.0	23.0	20.0	17.0
	FBGA	324	6.0	28.0	26.0	25.0	23.0
	BGA	356	1.0	12.0	11.0	10.0	9.0
EP20K160E	TQFP	144	6.0	25.0	24.0	23.0	22.0
	PQFP	208	5.0	28.0	26.0	23.0	19.0
	PQFP	240	4.0	24.0	21.0	19.0	16.0
	BGA	356	1.0	12.0	11.0	10.0	9.0
	FBGA	484	5.0	24.0	23.0	22.0	21.0
EP20K200	PQFP	208	4.0	25.0	23.0	20.0	17.0
	PQFP	240	3.0	21.0	19.0	17.0	15.0
	BGA	356	1.0	12.0	11.0	10.0	9.0
	FBGA	484	5.0	22.0	21.0	20.0	19.0
EP20K200E	PQFP	208	4.0	25.0	23.0	20.0	17.0
	PQFP	240	3.0	22.0	19.0	18.0	16.0
	BGA	356	2.0	12.0	11.0	10.0	9.0
	FBGA	484	5.0	23.0	22.0	21.0	20.0
	BGA	652	1.0	12.0	11.0	10.0	9.0
	FBGA	672	5.0	21.0	20.0	19.0	18.0

Table 37. Thermal Resistance of APEX 20KE, 20KC, and 20K Devices (Part 2 of 3)

Device	Package	Pin Count	θ_{JC} (° C/W)	θ_{JA} (° C/W) Still Air	θ_{JA} (° C/W) 100 ft./min.	θ_{JA} (° C/W) 200 ft./min.	θ_{JA} (° C/W) 400 ft./min.
EP20K200C	PQFP	208	4.0	25.0	23.0	20.0	17.0
	PQFP	240	3.0	22.0	19.0	18.0	16.0
	BGA	356	2.0	12.0	11.0	10.0	9.0
	FBGA	484	5.0	23.0	22.0	21.0	20.0
EP20K300E	PQFP	240	3.0	19.0	18.0	16.0	15.0
	BGA	652	1.0	12.0	11.0	10.0	9.0
	FBGA	672	5.0	20.0	19.0	18.0	17.0
EP20K400	BGA	652	0.5	9.0	8.0	7.0	6.0
	PGA	655	1.0	8.0	7.0	6.0	4.0
	FBGA	672	0.4	11.6	9.6	7.9	6.5
	FBGA w/ fin *(1)*	672	0.5	7.0	4.0	3.0	2.6
EP20K400E EP20K400C	BGA	652	0.5	9.0	8.0	7.0	6.0
	FBGA (Cu lid)	672	0.3	10.9	8.8	7.4	6.3
	FBGA (AlSiC lid)		0.4	11.7	9.7	8.0	6.7
	FBGA w/ fin *(1)*	672	0.5	7.0	4.0	3.0	2.6
EP20K600E EP20K600C	BGA	652	0.5	9.0	8.0	7.0	6.0
	FBGA (Cu lid)	672	0.2	10.8	8.7	7.3	6.1
	FBGA (AlSiC lid)		0.3	11.6	9.6	7.9	6.5
	FBGA w/ fin *(1)*	672	0.5	5.0	3.0	3.0	2.0
	FBGA (Cu lid)	1,020	0.2	9.9	7.8	6.5	5.4
	FBGA (AlSiC lid)		0.3	10.4	8.4	6.8	5.6
	FBGA w/ fin *(1)*	1,020	0.5	5.0	3.0	3.0	2.0
EP20K1000E EP20K1000C	BGA (Cu lid)	652	0.1	8.3	7.0	5.6	4.5
	BGA (AlSiC lid)		0.2	9.3	7.4	6.0	4.9
	FBGA w/ fin *(1)*	652	0.5	4.0	3.0	3.0	2.0
	FBGA (Cu lid)	672	0.1	10.6	8.6	7.2	6.0
	FBGA (AlSiC lid)		0.2	11.4	9.4	7.7	6.3
	FBGA w/ fin *(1)*	672	0.5	6.0	4.0	3.0	2.0
	FBGA (Cu lid)	1,020	0.1	9.7	7.7	6.3	5.2
	FBGA (AlSiC lid)		0.2	10.2	8.2	6.6	5.4
	FBGA w/ fin *(1)*	1,020	0.5	5.0	3.0	2.0	2.0

Table 37. Thermal Resistance of APEX 20KE, 20KC, and 20K Devices (Part 3 of 3)

Device	Package	Pin Count	θ_{JC} (° C/W)	θ_{JA} (° C/W) Still Air	θ_{JA} (° C/W) 100 ft./min.	θ_{JA} (° C/W) 200 ft./min.	θ_{JA} (° C/W) 400 ft./min.
EP20K1500E	BGA (Cu lid)	652	0.1	8.2	6.9	5.5	4.4
	BGA (AlSiC lid)		0.2	9.2	7.3	5.8	4.8
	FBGA	652	0.1	9.2	7.3	5.8	4.8
	FBGA w/ fin *(1)*	652	0.5	4.0	3.0	2.5	2.0
	FBGA (Cu lid)	1,020	0.1	9.6	7.6	6.2	5.1
	FBGA (AlSiC lid)		0.2	10.1	8.1	6.4	5.3
	FBGA w/ fin *(1)*	1,020	0.5	5.0	3.0	2.5	2.0

Note to Table 37:

(1) "fin" is an extra heat sink that customers can add to the device. Several vendors make heat sinks, and they all have different sizes. Altera performed the thermal calculations in Table 37 using the following fin specifications: width: 0.25 mm; height: 7.0 mm; pitch: 1.5 mm; base thickness: 0.5 mm.

ACEX 1K Devices Thermal Resistance

Table 38 provides thermal resistance values for ACEX 1K devices.

Table 38. Thermal Resistance of ACEX 1K Devices

Device	Package	Pin Count	θ_{JC} (° C/W)	θ_{JA} (° C/W) Still Air	θ_{JA} (° C/W) 100 ft./min.	θ_{JA} (° C/W) 200 ft./min.	θ_{JA} (° C/W) 400 ft./min.
EP1K10	TQFP	100	11.0	37.0	35.0	33.0	29.0
	TQFP	144	8.0	31.0	29.0	28.0	25.0
	PQFP	208	6.0	30.0	29.0	27.0	22.0
	FBGA	256	12.0	37.0	35.0	33.0	30.0
EP1K30	TQFP	144	8.0	28.0	27.0	26.0	24.0
	PQFP	208	5.0	30.0	28.0	26.0	21.0
	FBGA	256	9.0	31.0	29.0	28.0	25.0
EP1K50	TQFP	144	7.0	26.0	25.0	24.0	23.0
	PQFP	208	5.0	29.0	28.0	25.0	20.0
	FBGA	256	7.0	30.0	28.0	27.0	24.0
	FBGA	484	5.0	25.0	24.0	23.0	22.0
EP1K100	PQFP	208	5.0	28.0	26.0	23.0	18.0
	FBGA	256	6.0	28.0	26.0	25.0	23.0
	FBGA	484	5.0	24.0	23.0	22.0	21.0

Mercury Devices Thermal Resistance

Table 39 provides thermal resistance values for Mercury devices.

Table 39. Thermal Resistance of Mercury Devices

Device	Package	Pin Count	θ_{JC} (° C/W)	θ_{JA} (° C/W) Still Air	θ_{JA} (° C/W) 100 ft./min.	θ_{JA} (° C/W) 200 ft./min.	θ_{JA} (° C/W) 400 ft./min.
EP1M120	FBGA (Cu lid)	484	0.6	12.2	10.1	8.7	7.5
	FBGA (AlSiC lid)	484	0.9	13.0	11.1	9.3	7.9
EP1M350	FBGA (Cu lid)	780	0.2	10.5	8.5	7.1	5.9
	FBGA (AlSiC lid)	780	0.3	11.0	9.2	7.6	6.3

FLEX Series Devices Thermal Resistance

Table 40 through Table 42 provide thermal resistance values for FLEX series devices.

FLEX 10K Devices

Table 40 lists the thermal resistance of FLEX 10K devices.

Table 40. Thermal Resistance of FLEX 10K Devices (Part 1 of 3)

Device	Package	Pin Count	θ_{JC} (° C/W)	θ_{JA} (° C/W) Still Air	θ_{JA} (° C/W) 100 ft./min.	θ_{JA} (° C/W) 200 ft./min.	θ_{JA} (° C/W) 400 ft./min.
EPF10K10	PLCC	84	9.0	28.0	26.0	24.0	22.0
	TQFP	144	7.0	26.0	25.0	24.0	23.0
	PQFP	208	5.0	29.0	27.0	25.0	20.0
EPF10K10A	TQFP	100	10.0	35.0	33.0	31.0	28.0
	TQFP	144	7.0	29.0	28.0	26.0	25.0
	PQFP	208	5.0	30.0	29.0	27.0	21.0
	FBGA	256	7.0	33.0	30.0	28.0	26.0
EPF10K20	TQFP	144	6.0	24.0	23.0	22.0	21.0
	RQFP	208	1.0	17.0	16.0	15.0	13.0
	RQFP	240	1.0	14.0	12.0	11.0	10.0
EPF10K30	RQFP	208	1.0	17.0	16.0	15.0	12.0
	RQFP	240	1.0	13.0	12.0	11.0	10.0
	BGA	356	1.0	12.0	11.0	10.0	9.0
EPF10K30A	TQFP	144	7.0	25.0	24.0	23.0	22.0
	PQFP	208	5.0	29.0	27.0	24.0	19.0
	PQFP	240	4.0	25.0	22.0	20.0	17.0
	FBGA	256	6.0	28.0	26.0	24.0	23.0
	BGA	356	1.0	12.0	11.0	10.0	9.0
	FBGA	484	5.0	24.0	22.0	21.0	20.0
EPF10K30E	TQFP	144	9.0	28.0	27.0	26.0	24.0
	PQFP	208	5.0	30.0	28.0	26.0	21.0
	FBGA	256	9.0	31.0	29.0	28.0	25.0
	FBGA	484	6.0	26.0	25.0	24.0	22.0

Table 40. Thermal Resistance of FLEX 10K Devices (Part 2 of 3)

Device	Package	Pin Count	θ_{JC} (° C/W)	θ_{JA} (° C/W) Still Air	θ_{JA} (° C/W) 100 ft./min.	θ_{JA} (° C/W) 200 ft./min.	θ_{JA} (° C/W) 400 ft./min.
EPF10K40	RQFP	208	1.0	17.0	16.0	15.0	12.0
	RQFP	240	1.0	13.0	12.0	11.0	10.0
EPF10K50	RQFP	240	1.0	12.0	11.0	10.0	9.0
	BGA	356	1.0	12.0	11.0	10.0	9.0
	PGA	403	3.0	12.0	10.0	9.0	8.0
	PGA *(1)*		3.0	10.0	8.0	7.0	6.0
EPF10K50V	PQFP	240	4.0	25.0	22.0	20.0	17.0
	RQFP	240	1.0	13.0	12.0	11.0	10.0
	BGA	356	1.0	12.0	11.0	10.0	9.0
	FBGA	484	5.0	23.0	22.0	21.0	20.0
EPF10K50E	TQFP	144	9.0	26.0	25.0	24.0	23.0
	PQFP	208	5.0	29.0	27.0	24.0	19.0
	PQFP	240	4.0	25.0	22.0	20.0	17.0
	FBGA	256	6.0	29.0	27.0	26.0	24.0
	FBGA	484	5.0	25.0	24.0	23.0	21.0
EPF10K50S	TQFP	144	9.0	26.0	25.0	24.0	23.0
	PQFP	208	5.0	29.0	28.0	25.0	20.0
	PQFP	240	4.0	26.0	23.0	20.0	17.0
	FBGA	256	7.0	30.0	28.0	27.0	24.0
	BGA	356	1.0	12.0	11.0	10.0	9.0
	FBGA	484	5.0	25.0	24.0	23.0	22.0
EPF10K70	RQFP	240	1.0	12.0	11.0	10.0	9.0
	PGA	503	1.0	8.0	7.0	6.0	4.0
EPF10K100	PGA	503	1.0	8.0	7.0	6.0	4.0
	PGA *(1)*		1.0	6.0	5.0	4.0	3.0
	PGA *(2)*		—	2.0	—	—	—
EPF10K100A	RQFP	240	1.0	13.0	11.0	10.0	9.0
	BGA	356	1.0	12.0	11.0	10.0	9.0
	FBGA	484	5.0	22.0	21.0	20.0	18.0
	BGA	600	0.5	10.0	9.0	8.0	7.0
EPF10K100E	PQFP	208	5.0	28.0	26.0	23.0	18.0
	PQFP	240	4.0	23.0	21.0	19.0	16.0
	FBGA	256	6.0	28.0	26.0	25.0	23.0
	BGA	356	1.0	12.0	11.0	10.0	9.0
	FBGA	484	5.0	24.0	23.0	22.0	21.0
EPF10K130V	PGA	599	1.0	8.0	7.0	6.0	4.0
	BGA	600	0.5	10.0	9.0	8.0	7.0

Table 40. Thermal Resistance of FLEX 10K Devices (Part 3 of 3)

Device	Package	Pin Count	θ_{JC} (° C/W)	θ_{JA} (° C/W) Still Air	θ_{JA} (° C/W) 100 ft./min.	θ_{JA} (° C/W) 200 ft./min.	θ_{JA} (° C/W) 400 ft./min.
EPF10K130E	PQFP	240	4.0	21.0	19.0	17.0	15.0
	BGA	356	1.0	12.0	11.0	10.0	9.0
	FBGA	484	5.0	23.0	22.0	21.0	20.0
	BGA	600	0.5	10.0	9.0	8.0	7.0
	FBGA	672	5.0	21.0	20.0	19.0	18.0
EPF10K200E	PGA	599	1.0	8.0	7.0	6.0	4.0
	BGA	600	0.5	10.0	9.0	8.0	7.0
	FBGA	672	5.0	20.0	19.0	18.0	17.0
EPF10K200S	RQFP	240	1.0	13.0	11.0	10.0	9.0
	BGA	356	1.0	12.0	11.0	10.0	9.0
	FBGA	484	5.0	22.0	21.0	20.0	19.0
	BGA	600	0.5	10.0	9.0	8.0	7.0
	FBGA	672	5.0	21.0	20.0	19.0	18.0
EPF10K250A	PGA	599	1.0	8.0	7.0	6.0	4.0
	BGA	600	0.5	10.0	9.0	8.0	7.0

Notes to Table 40:

(1) With attached pin-fin heat sink.

(2) With attached motor-driven fan heat sink.

FLEX 8000 Devices

Table 41 lists the thermal resistance of FLEX 8000 devices.

Table 41. Thermal Resistance of FLEX 8000 Devices (Part 1 of 2)

Device	Package	Pin Count	θ_{JC} (° C/W)	θ_{JA} (° C/W) Still Air	θ_{JA} (° C/W) 100 ft./min.	θ_{JA} (° C/W) 200 ft./min.	θ_{JA} (° C/W) 400 ft./min.
EPF8282A	PLCC	84	10.0	30.0	28.0	26.0	23.0
	TQFP	100	11.0	36.0	34.0	32.0	29.0
EPF8452A	PLCC	84	10.0	30.0	28.0	26.0	23.0
	TQFP	100	11.0	35.0	33.0	31.0	28.0
	PQFP	160	6.0	32.0	31.0	30.0	28.0
EPF8636A	PLCC	84	10.0	29.0	28.0	26.0	23.0
	PQFP	160	6.0	32.0	31.0	30.0	27.0
	PGA	192	6.0	16.0	11.0	8.0	6.0
	PQFP	208	5.0	30.0	38.0	26.0	20.0
	RQFP	208	1.0	17.0	16.0	15.0	14.0

Table 41. Thermal Resistance of FLEX 8000 Devices (Part 2 of 2)

Device	Package	Pin Count	θ_{JC} (° C/W)	θ_{JA} (° C/W) Still Air	θ_{JA} (° C/W) 100 ft./min.	θ_{JA} (° C/W) 200 ft./min.	θ_{JA} (° C/W) 400 ft./min.
EPF8820A	TQFP	144	9.0	26.0	25.0	24.0	23.0
	PQFP	160	6.0	32.0	31.0	30.0	27.0
	PQFP	208	5.0	29.0	27.0	25.0	20.0
	RQFP	208	1.0	17.0	16.0	15.0	14.0
	BGA	225	6.0	28.0	19.0	14.0	11.0
EPF81188A	PQFP	208	5.0	28.0	26.0	24.0	19.0
	PGA	232	2.0	14.0	10.0	7.0	5.0
	PQFP	240	4.0	24.0	21.0	19.0	16.0
	RQFP	240	1.0	14.0	12.0	11.0	10.0
EPF81500A	PQFP	240	4.0	22.0	20.0	19.0	16.0
	RQFP	240	1.0	13.0	12.0	11.0	10.0
	PGA	280	2.0	14.0	10.0	7.0	5.0

FLEX 6000 Devices

Table 42 lists the thermal resistance of FLEX 6000 devices.

Table 42. Thermal Resistance of FLEX 6000 Devices

Device	Package	Pin Count	θ_{JC} (° C/W)	θ_{JA} (° C/W) Still Air	θ_{JA} (° C/W) 100 ft./min.	θ_{JA} (° C/W) 200 ft./min.	θ_{JA} (° C/W) 400 ft./min.
EPF6010A	TQFP	100	11.0	35.0	33.0	31.0	28.0
	TQFP	144	10.0	28.0	26.0	25.0	24.0
EPF6016	TQFP	144	10.0	28.0	26.0	25.0	24.0
	PQFP	208	5.0	30.0	28.0	26.0	21.0
	PQFP	240	4.0	26.0	24.0	21.0	17.0
	BGA	256	6.0	28.0	22.0	20.0	19.0
EPF6016A	TQFP	100	11.0	35.0	33.0	31.0	28.0
	FBGA		14.0	36.0	34.0	32.0	29.0
	TQFP	144	10.0	29.0	28.0	26.0	24.0
	PQFP	208	5.0	30.0	29.0	26.0	21.0
	FBGA	256	10.0	32.0	30.0	29.0	26.0
EPF6024A	TQFP	144	10.0	27.0	26.0	25.0	24.0
	PQFP	208	5.0	29.0	28.0	26.0	20.0
	PQFP	240	4.0	26.0	23.0	21.0	17.0
	BGA	256	6.0	28.0	22.0	20.0	19.0
	FBGA		8.0	30.0	29.0	27.0	25.0

Excalibur Devices Thermal Resistance

Table 43 provides thermal resistance values for Excalibur devices.

Table 43. Thermal Resistance of Excalibur Embedded Processor Solutions

Device	Package	Pin Count	θ_{JC} (° C/W)	θ_{JA} (° C/W) Still Air	θ_{JA} (° C/W) 100 ft./min.	θ_{JA} (° C/W) 200 ft./min.	θ_{JA} (° C/W) 400 ft./min.
EPXA1	FBGA	484	4.0	20.0	18.3	15.8	13.9
	FBGA, Flip Chip (Cu lid)	672	0.5	11.3	9.3	7.9	6.7
	FBGA, Flip Chip (AlSiC lid)	672	0.8	12.2	10.2	8.6	7.2
EPXA4	FBGA, Flip Chip (Cu lid)	672	0.2	10.8	8.8	7.3	6.2
	FBGA, Flip Chip (AlSiC lid)	672	0.3	11.6	9.6	7.9	6.6
	FBGA, Flip Chip (Cu lid)	1,020	0.2	9.9	7.9	6.5	5.4
	FBGA, Flip Chip (AlSiC lid)	1,020	0.3	10.4	8.5	6.9	5.7
EPXA10	FBGA, Flip Chip (Cu lid)	1,020	0.1	9.6	7.6	6.2	5.1
	FBGA, Flip Chip (AlSiC lid)	1,020	0.2	10.0	8.0	6.4	5.7

Package Outlines

The package outlines on the following pages are listed in order of ascending pin count. Altera package outlines meet the requirements of *JEDEC Publication No. 95*.

All lidless flip chip and wire bond packages are non-vented packages. All other flip chip packages are vented packages.

8-Pin Plastic Dual In-Line Package (PDIP)—Wire Bond

- All dimensions and tolerances conform to ASME Y14.5M - 1994.
- Controlling dimension is in inches.
- Pin 1 may be indicated by an ID dot, or a special feature, in its proximity on package surface.

Package Information	
Description	**Specification**
Ordering Code Reference	P
Package Acronym	PDIP
Leadframe Material	Copper
Lead Finish (Plating)	Regular: 85Sn:15Pb (Typ.) Pb-free: Matte Sn
JEDEC Outline Reference	MS-001 Variation: BA
Lead Coplanarity	NA
Weight	0.6 g (Typ.)
Moisture Sensitivity Level	Printed on moisture barrier bag

Package Outline Dimension Table			
Symbol	**Inches**		
	Min.	**Nom.**	**Max.**
A	—	—	0.170
A1	0.015	—	—
A2	0.130 TYP		
D	0.360	—	0.380
E	0.300	0.310	0.325
E1	0.240	0.250	0.260
L	0.125	—	0.135
b	0.016	0.018	0.020
c	0.008	0.010	0.014
e	0.100 BSC		

Package Outline

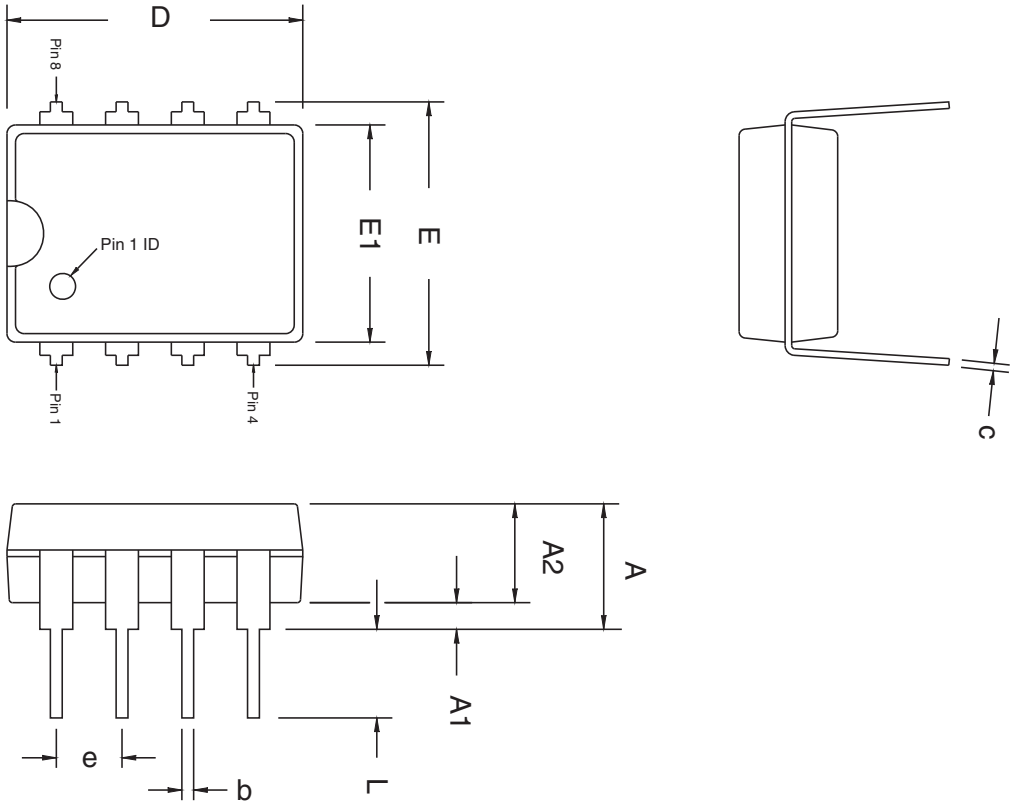

20-Pin Plastic J-Lead Chip Carrier (PLCC)—Wire Bond

- All dimensions and tolerances conform to ASME Y14.5M – 1994.
- Controlling dimension is in inches.
- Pin 1 is generally indicated by an indentation in the plastic body, in Pin 1's proximity, on package surface.

Package Information	
Description	**Specification**
Ordering Code Reference	L
Package Acronym	PLCC
Leadframe Material	Copper
Lead Finish (Plating)	Regular: 85Sn:15Pb (Typ.) Pb-free: Matte Sn
JEDEC Outline Reference	MS-018 Variation: AA
Lead Coplanarity	0.004 inches (0.10mm)
Weight	0.8 g (Typ.)
Moisture Sensitivity Level	Printed on moisture barrier bag

Package Outline Dimension Table			
Symbol	**Inches**		
	Min.	**Nom.**	**Max.**
A	0.165	0.172	0.180
A1	0.020	—	—
A2	0.150 TYP		
D	0.385	0.390	0.395
D1	0.350	0.353	0.356
D2	0.290	0.310	0.330
E	0.385	0.390	0.395
E1	0.350	0.353	0.356
E2	0.290	0.310	0.330
b	0.013	—	0.021
c	0.010 TYP		
e	0.050 TYP		

Package Outline

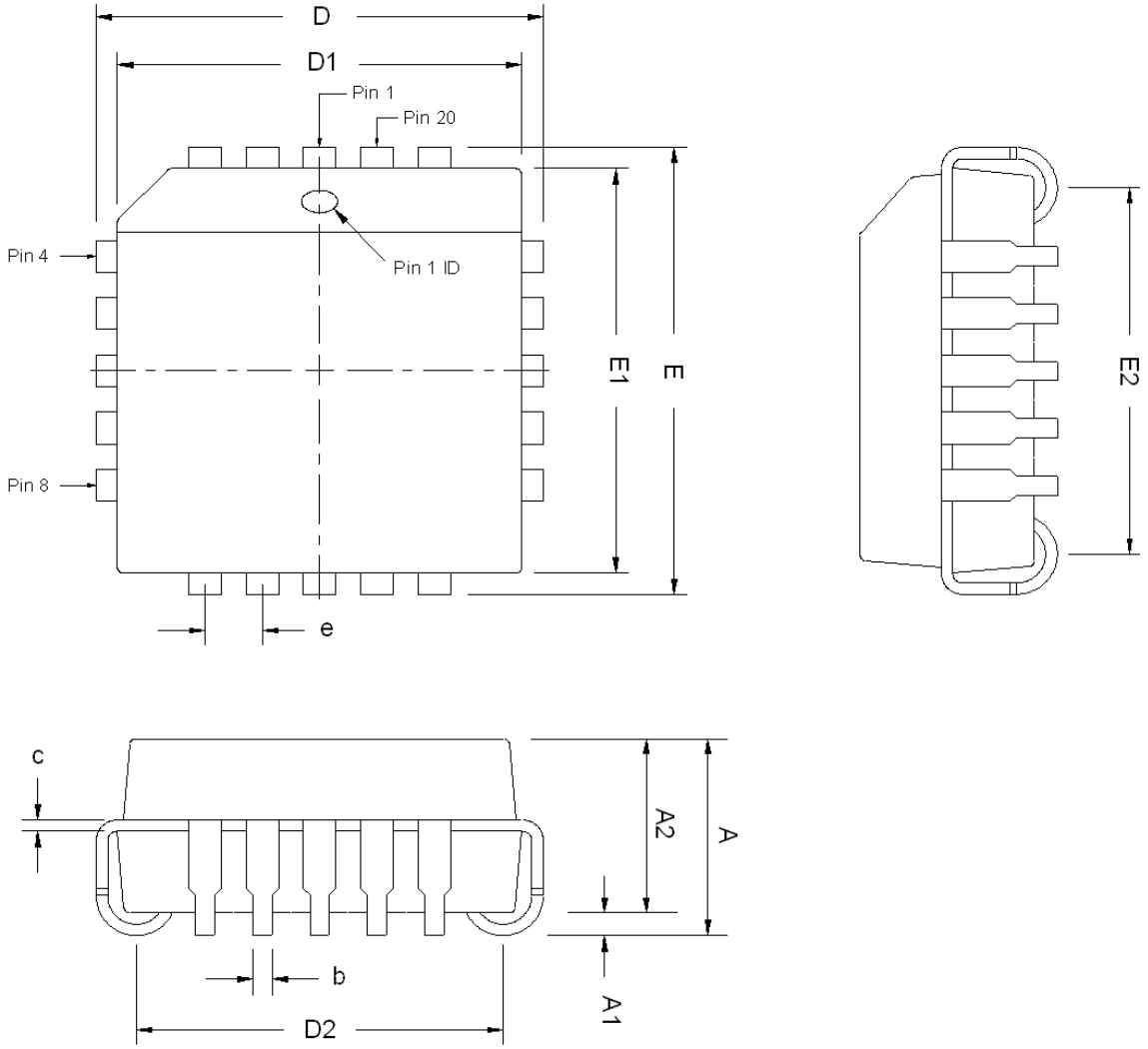

32-Pin Plastic Thin Quad Flat Pack (TQFP)—Wire Bond

- All dimensions and tolerances conform to ASME Y14.5M – 1994.
- Controlling dimension is in millimeters.
- Pin 1 may be indicated by an ID dot, or a special feature, in its proximity on package surface.

Package Information	
Description	**Specification**
Ordering Code Reference	T
Package Acronym	TQFP
Leadframe Material	Copper
Lead Finish (Plating)	Regular: 85Sn:15Pb (Typ.) Pb-free: Matte Sn
JEDEC Outline Reference	MS-026 Variation: ABA
Lead Coplanarity	0.004 inches (0.1mm)
Weight	0.2 g (Typ.)
Moisture Sensitivity Level	Printed on moisture barrier bag

Package Outline Dimension Table			
Symbol	**Millimeters**		
	Min.	**Nom.**	**Max.**
A	—	—	1.20
A1	0.05	—	0.15
A2	0.95	1.00	1.05
D	9.00 BSC		
D1	7.00 BSC		
E	9.00 BSC		
E1	7.00 BSC		
L	0.45	0.60	0.75
L1	1.00 REF		
S	0.20	—	—
b	0.30	0.37	0.45
c	0.09	—	0.20
e	0.80 BSC		
θ	0°	3.5°	7°

Package Outline

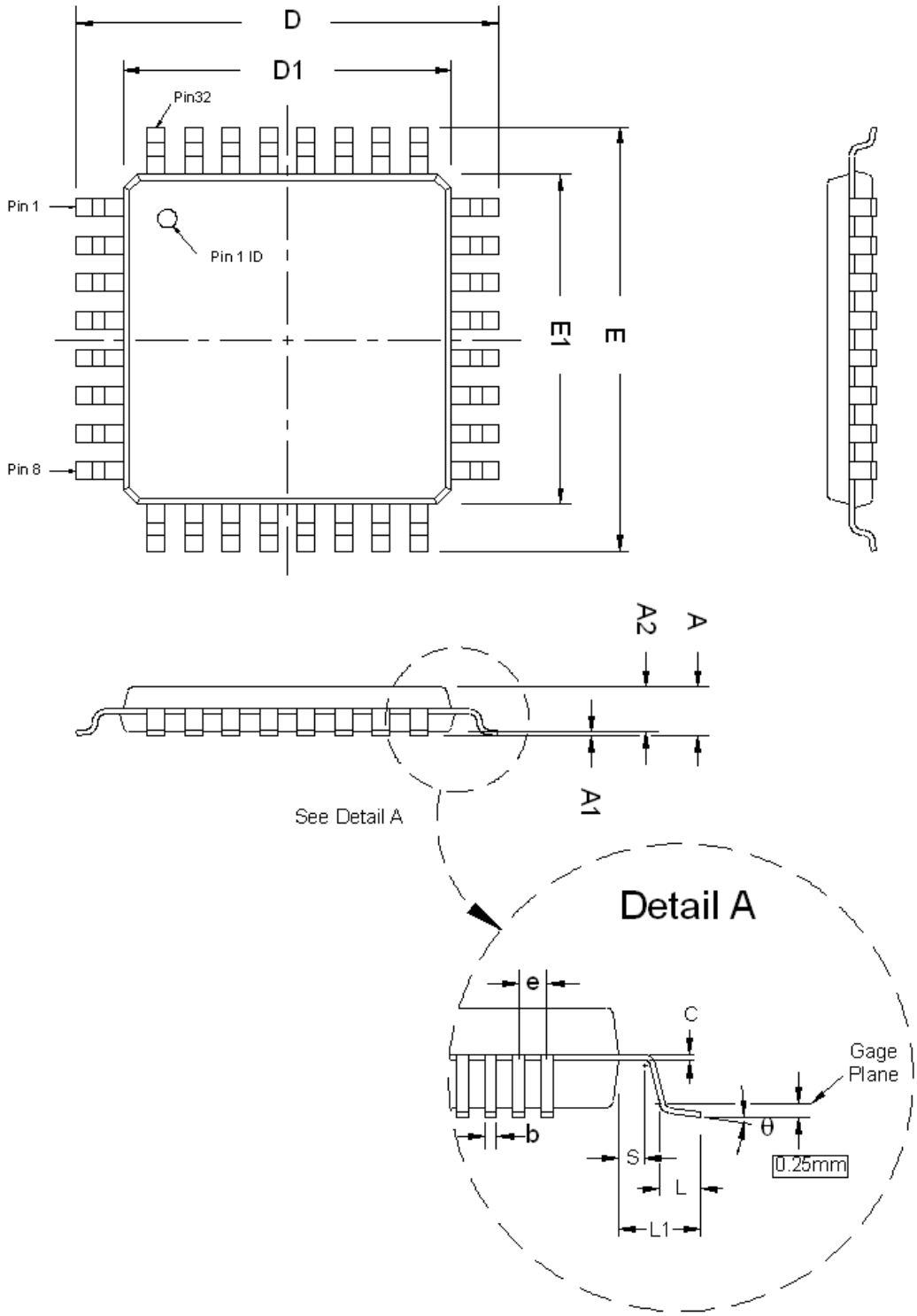

44-Pin Plastic J-Lead Chip Carrier (PLCC)—Wire Bond

- All dimensions and tolerances conform to ASME Y14.5M - 1994.
- Controlling dimension is in inches.
- Pin 1 is generally indicated by an indentation in the plastic body, in Pin 1's proximity, on package surface.

Package Information	
Description	**Specification**
Ordering Code Reference	L
Package Acronym	PLCC
Leadframe Material	Copper
Lead Finish (Plating)	Regular: 85Sn:15Pb (Typ.) Pb-free: Matte Sn
JEDEC Outline Reference	MS-018 Variation: AC
Lead Coplanarity	0.004 inches (0.10 mm)
Weight	2.6 g (Typ.)
Moisture Sensitivity Level	Printed on moisture barrier bag

Package Outline Dimension Table			
Symbol	**Inches**		
	Min.	**Nom.**	**Max.**
A	0.165	0.172	0.180
A1	0.020	—	—
A2	0.150 TYP		
D	0.685	0.690	0.695
D1	0.650	0.653	0.656
D2	0.582	0.610	0.638
E	0.685	0.690	0.695
E1	0.650	0.653	0.656
E2	0.582	0.610	0.638
b	0.013	—	0.021
c	0.010 TYP		
e	0.050 TYP		

Package Outline

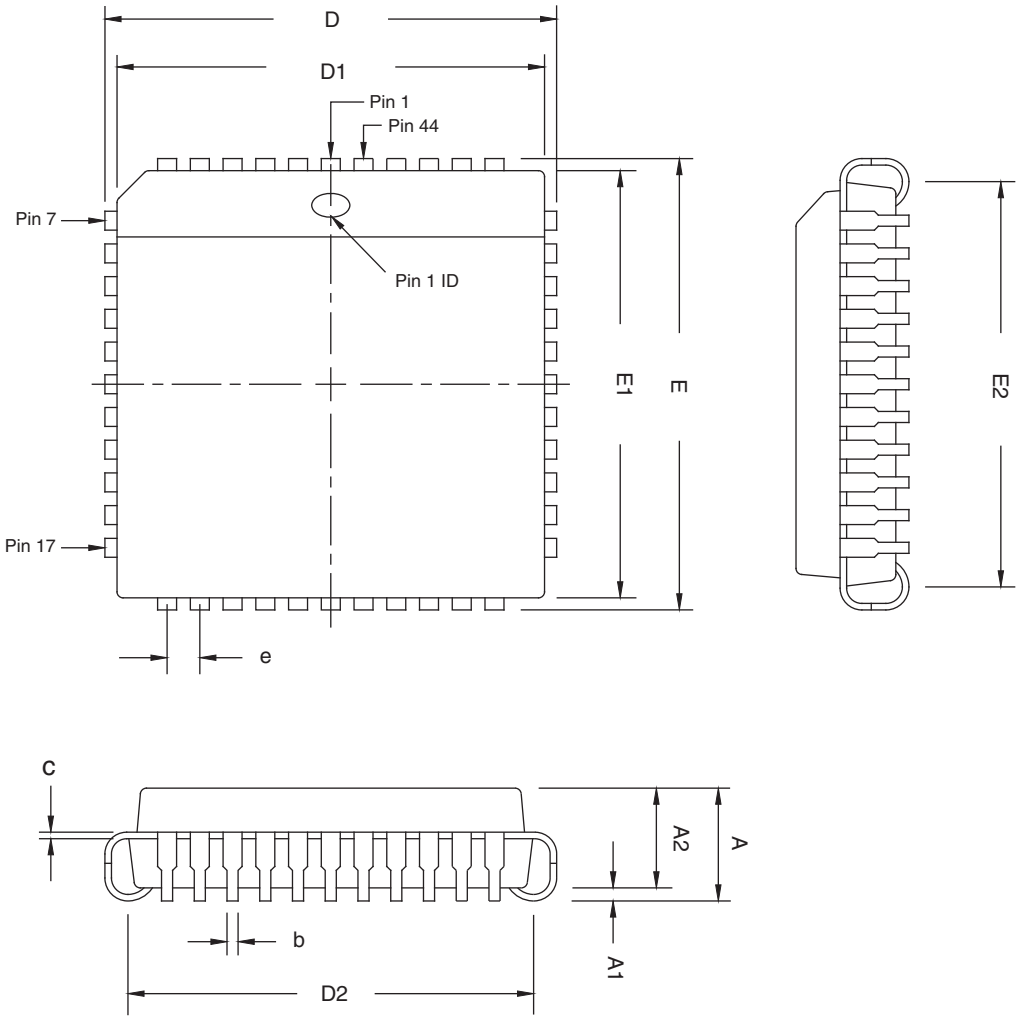

44-Pin Plastic Thin Quad Flat Pack (TQFP)—Wire Bond

- All dimensions and tolerances conform to ASME Y14.5M – 1994.
- Controlling dimension is in millimeters.
- Pin 1 may be indicated by an ID dot, or a special feature, in its proximity on package surface.

Package Information	
Description	**Specification**
Ordering Code Reference	T
Package Acronym	TQFP
Leadframe Material	Copper
Lead Finish (Plating)	Regular: 85Sn:15Pb (Typ.) Pb-free: Matte Sn
JEDEC Outline Reference	MS-026 Variation: ACB
Lead Coplanarity	0.004 inches (0.1mm)
Weight	0.3 g (Typ.)
Moisture Sensitivity Level	Printed on moisture barrier bag

Package Outline Dimension Table			
Symbol	**Millimeters**		
	Min.	**Nom.**	**Max.**
A	—	—	1.20
A1	0.05	—	0.15
A2	0.95	—	—
D	12.00 BSC		
D1	10.00 BSC		
E	12.00 BSC		
E1	10.00 BSC		
L	0.45	0.60	0.75
L1	1.00 REF		
S	0.20	—	—
b	0.30	0.37	0.45
c	0.09	—	0.20
e	0.80 BSC		
θ	0°	3.5°	7°

Package Outline

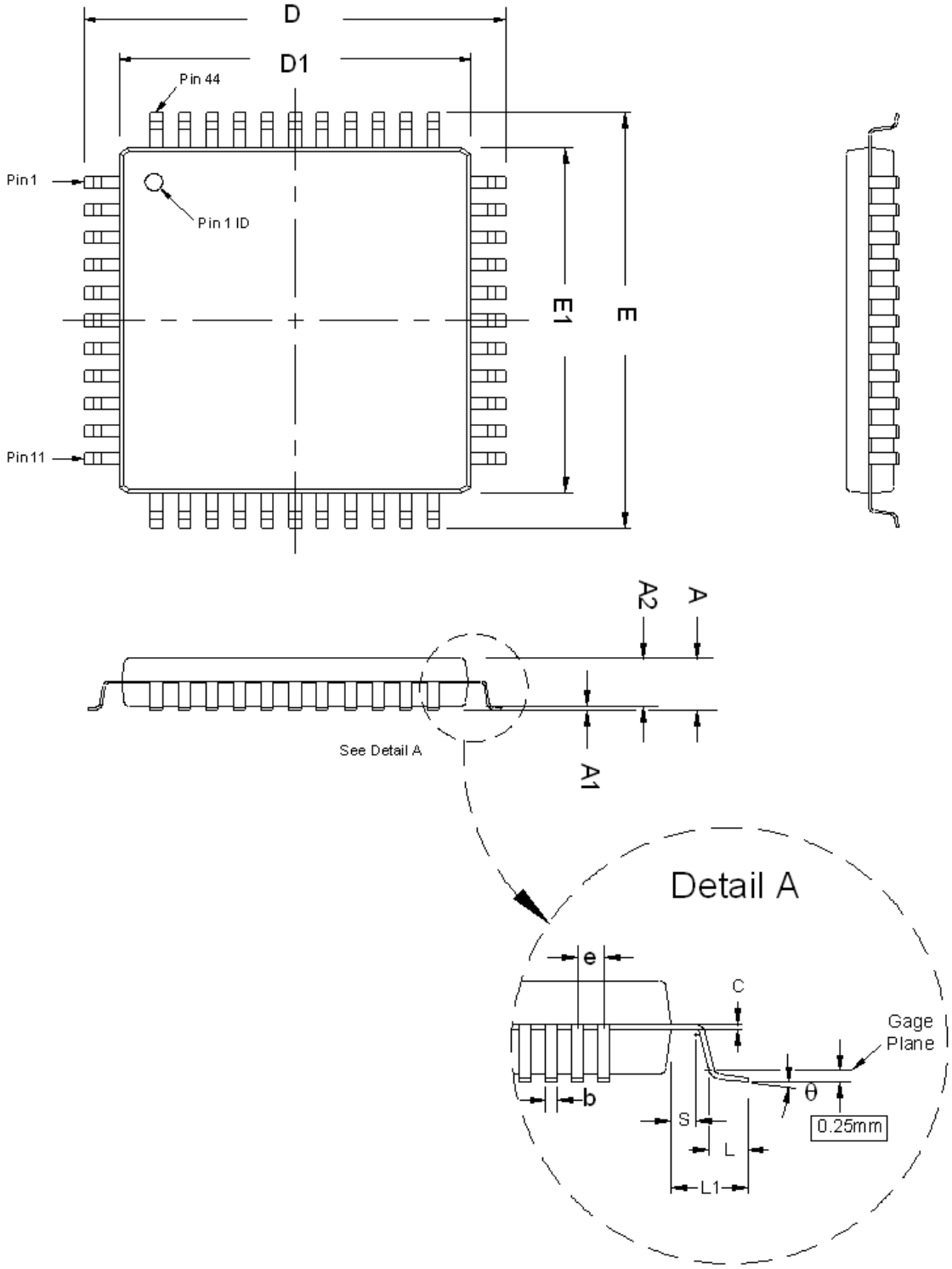

49-Pin Ultra FineLine Ball-Grid Array (UBGA)—Wire Bond

- All dimensions and tolerances conform to ASME Y14.5M – 1994.
- Controlling dimension is in millimeters.
- Pin A1 may be indicated by an ID dot, or a special feature, in its proximity on package surface.

Package Information	
Description	**Specification**
Ordering Code Reference	U
Package Acronym	UBGA
Substrate Material	BT
Solder Ball Composition	Regular: 63Sn:37Pb (Typ.) Pb-free: Sn:3Ag:0.5Cu (Typ.)
JEDEC Outline Reference	MO-216 Variation: BAB-2
Lead Coplanarity	0.005 inches (0.12mm)
Weight	0.2 g (Typ.)
Moisture Sensitivity Level	Printed on moisture barrier bag

Package Outline Dimension Table			
Symbol	**Millimeters**		
	Min.	**Nom.**	**Max.**
A	—	—	1.55
A1	0.20	—	—
A2	—	—	1.35
A3	0.70 TYP		
D	7.00 BSC		
E	7.00 BSC		
b	0.40	0.50	0.60
e	0.80 BSC		

Package Outline

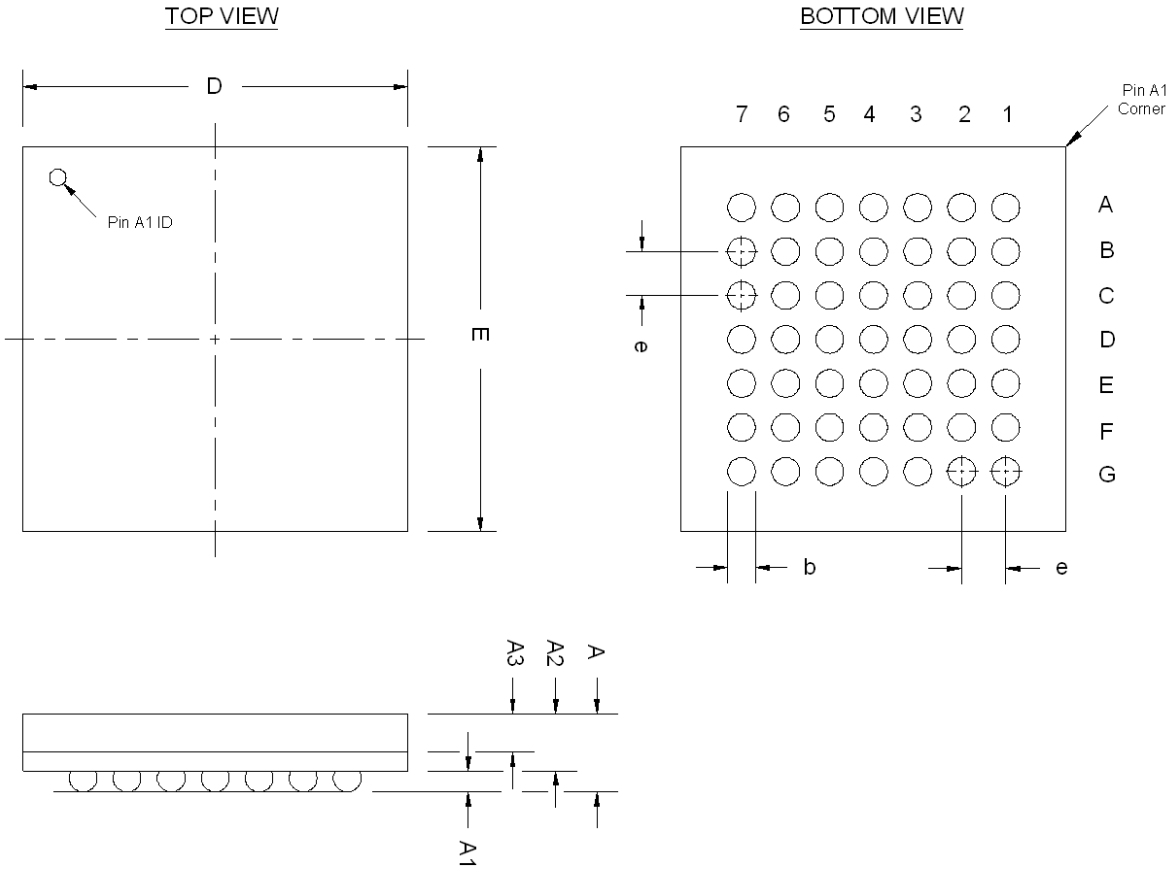

64-Pin Plastic Enhanced Quad Flat Pack (EQFP)—Wire Bond

- All dimensions and tolerances conform to ASME Y14.5M – 1994.
- Controlling dimension is in millimeters.
- Pin A1 may be indicated by an ID dot, or a special feature, in its proximity on package surface.

Package Information	
Description	**Specification**
Ordering Code Reference	E
Package Acronym	EQFP
Leadframe Material	Copper
Lead Finish (plating)	Regular: 85Sn:15Pb (Typ.) Pb-free: Matte Sn
JEDEC Outline Reference	MS-026 Variation: ABD-HD
Lead Coplanarity	0.003 inch (0.08 mm)
Weight	0.15 g (Typ.)
Moisture Sensitivity Level	Printed on moisture barrier bag

Package Outline Dimension Table			
Symbol	**Millimeters**		
	Min.	**Nom.**	**Max.**
A	—	—	1.20
A1	0.05	—	0.15
A2	0.95	1.00	1.05
D	9.00 BSC		
D1	7.00 BSC		
D2	3.50	4.50	5.50
E	9.00 BSC		
E1	7.00 BSC		
E2	3.50	4.50	5.50
L	0.45	0.60	0.75
L1	1.00 REF		
S	0.20	—	—
b	0.13	0.18	0.23
c	0.09	—	0.20
e	0.40 BSC		
θ	0°	3.5°	7°

Package Outline

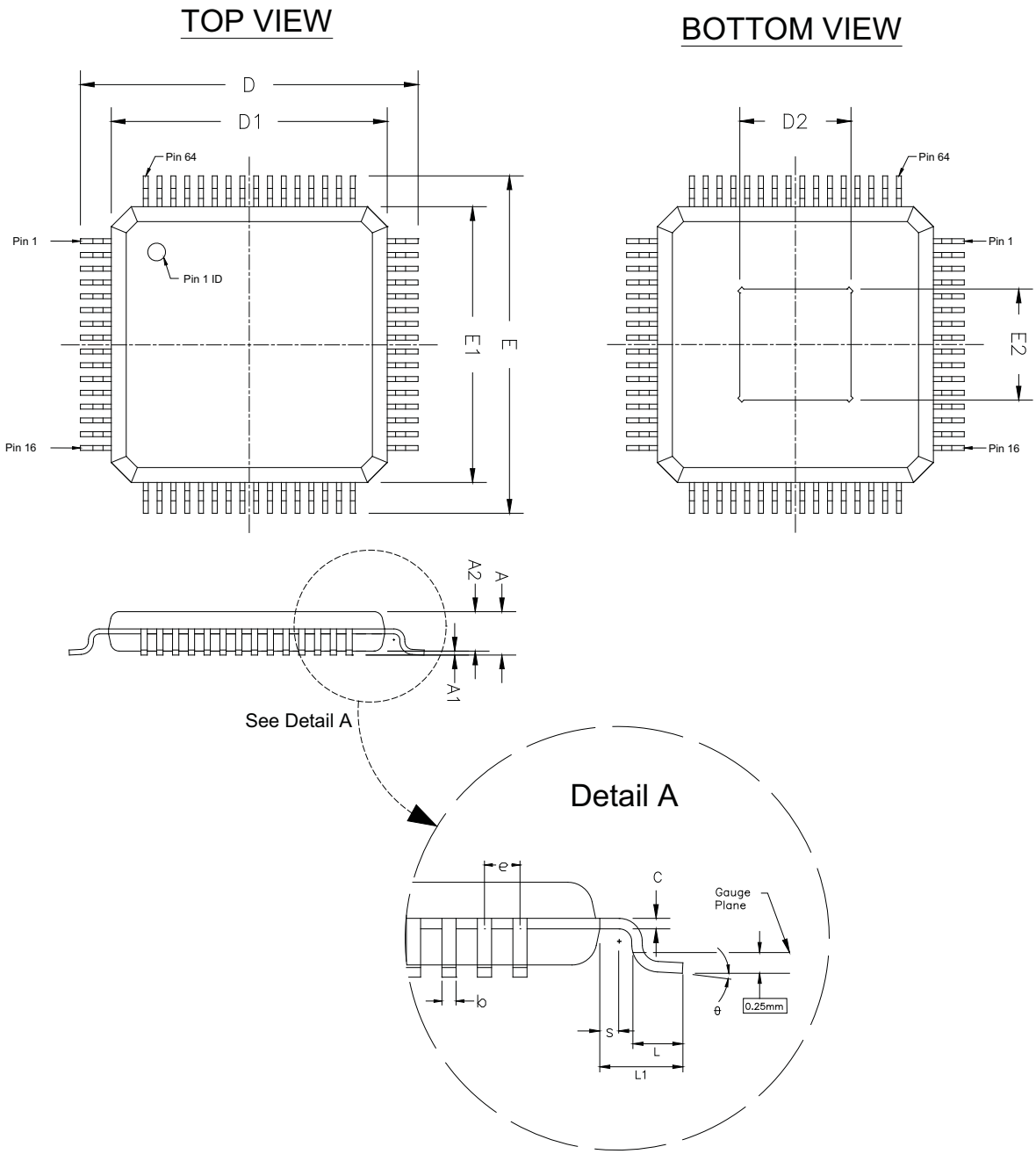

84-Pin Plastic J-Lead Chip Carrier (PLCC)—Wire Bond

- All dimensions and tolerances conform to ASME Y14.5M – 1994.
- Controlling dimension is in inches.
- Pin 1 is generally indicated by an indentation in the plastic body, in Pin 1's proximity, on package surface.

Package Information	
Description	**Specification**
Ordering Code Reference	L
Package Acronym	PLCC
Leadframe Material	Copper
Lead Finish (Plating)	Regular: 85Sn:15Pb (Typ.) Pb-free: Matte Sn
JEDEC Outline Reference	MS-018 Variation: AF
Lead Coplanarity	0.004 inches (0.10mm)
Weight	7.9 g (Typ.)
Moisture Sensitivity Level	Printed on moisture barrier bag

Package Outline Dimension Table			
Symbol	**Inches**		
	Min.	**Nom.**	**Max.**
A	0.165	0.172	0.180
A1	0.020	—	—
A2	0.150 TYP		
D	1.185	1.190	1.195
D1	1.150	1.154	1.158
D2	1.082	1.110	1.138
E	1.185	1.190	1.195
E1	1.150	1.154	1.158
E2	1.082	1.110	1.138
b	0.013	—	0.021
c	0.008 TYP		
e	0.050 TYP		

Package Outline

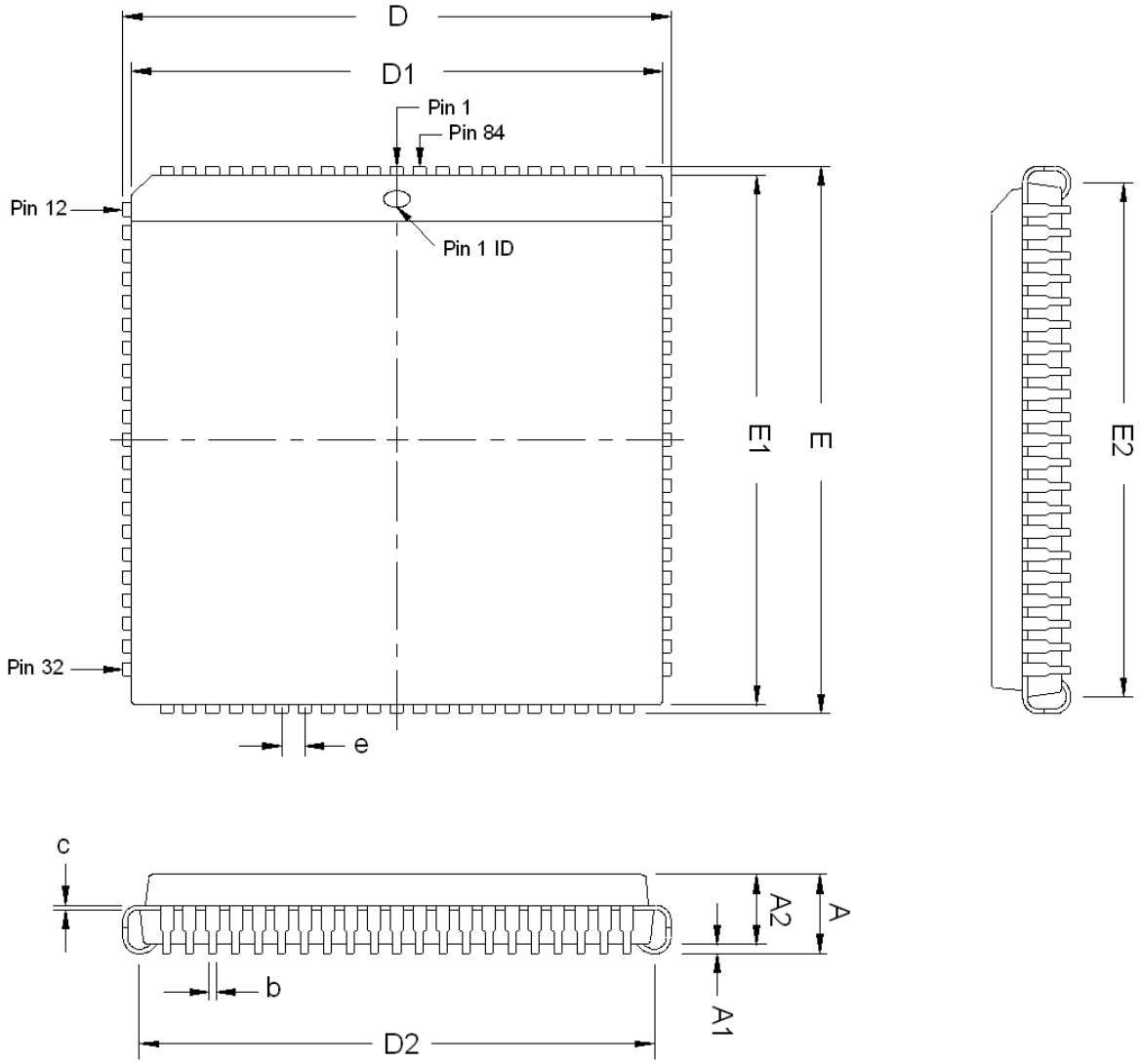

88-Pin Ultra FineLine Ball-Grid Array (UBGA)—Wire Bond

- All dimensions and tolerances conform to ASME Y14.5M - 1994.
- Controlling dimension is in millimeters.
- Pin A1 may be indicated by an ID dot, or a special feature, in its proximity on package surface.

Package Information	
Description	**Specification**
Ordering Code Reference	U
Package Acronym	UBGA
Substrate Material	BT
Solder Ball Composition	Regular: 63Sn:37Pb (Typ.) Pb-free: Sn:3Ag:0.5Cu (Typ.)
JEDEC Outline	MO-219
Lead Coplanarity	0.005 inches (0.12 mm)
Weight	0.4 g (Typ.)
Moisture Sensitivity Level	Printed on moisture barrier bag

Package Outline Dimension Table			
Symbol	**Millimeters**		
	Min.	**Nom.**	**Max.**
A	—	—	1.40
A1	0.25	—	—
A2	0.80	—	—
A3	0.70 REF		
D	11.00 BSC		
E	8.00 BSC		
b	0.40	0.45	0.50
e	0.80 BSC		

Package Outline

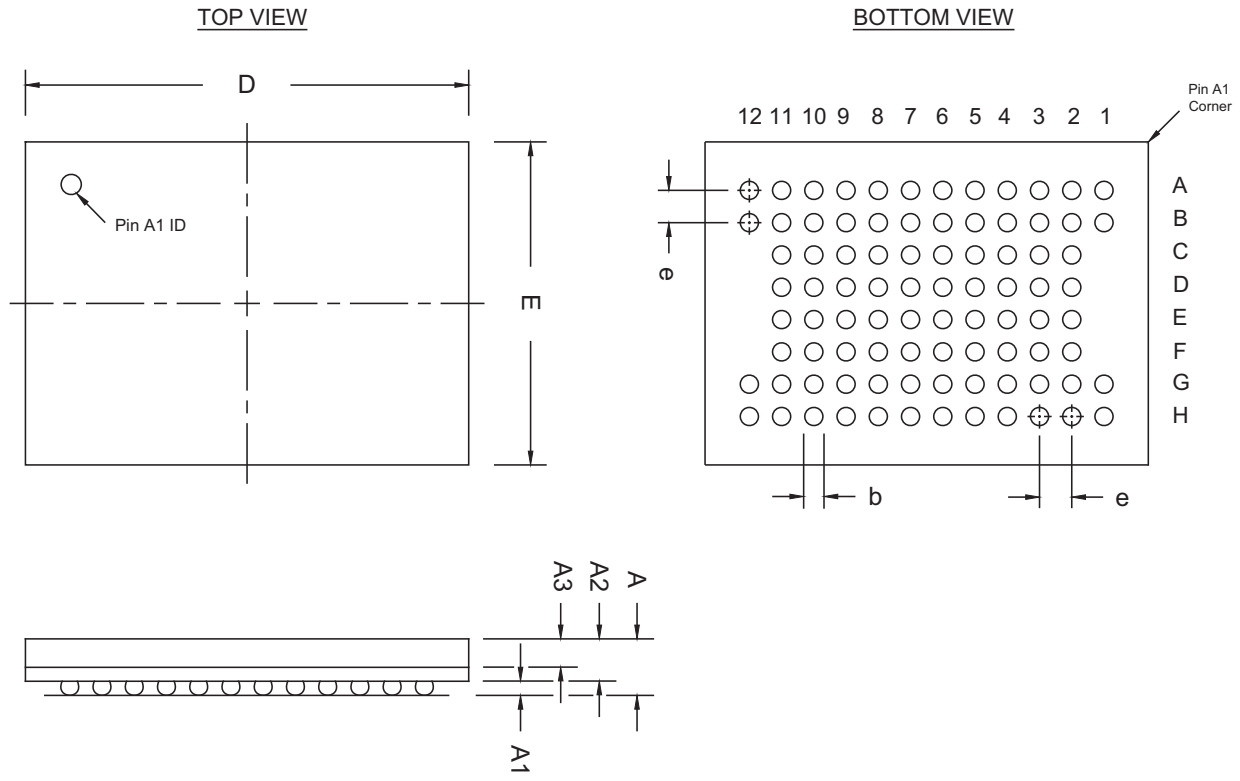

100-Pin FineLine Ball-Grid Array (FBGA), Option 1—Wire Bond

- All dimensions and tolerances conform to ASME Y14.5M – 1994.
- Controlling dimension is in millimeters.
- Pin A1 may be indicated by an ID dot, or a special feature, in its proximity on the package surface.

☞ This POD is applicable to F100 packages of all products except MAX II, which is assembled in Option 2 package outlines.

Package Information	
Description	**Specification**
Ordering Code Reference	F
Package Acronym	FBGA
Substrate Material	BT
Solder ball composition	Regular: 63Sn:37Pb (Typ.) Pb-free: Sn:3Ag:0.5Cu (Typ.)
JEDEC Outline Reference	MO-192 Variation: AAC-1
Lead Coplanarity	0.008 inches (0.20mm)
Weight	0.6 g (Typ.)
Moisture Sensitivity Level	Printed on moisture barrier bag

Package Outline Dimension Table			
Symbol	**Millimeters**		
	Min.	**Nom.**	**Max.**
A	—	—	1.70
A1	0.30	—	—
A2	0.25	—	1.10
A3	—	—	0.80
D	11.00 BSC		
E	11.00 BSC		
b	0.50	0.60	0.70
e	1.00 BSC		

Package Outline

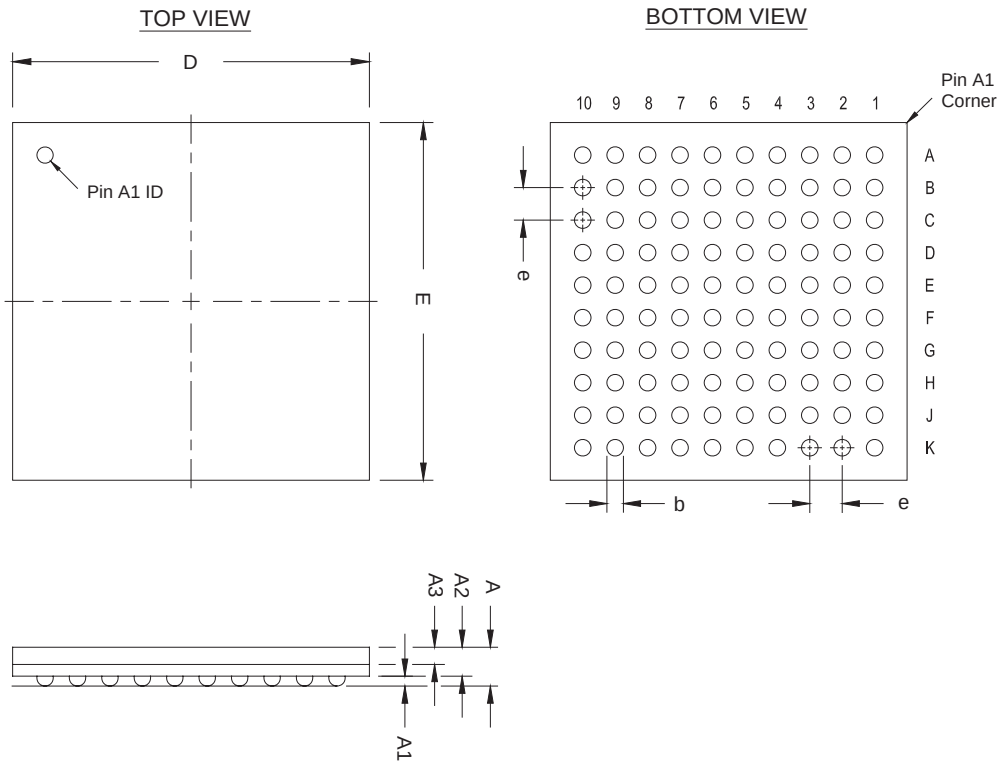

100-Pin Plastic Quad Flat Pack (PQFP)—Wire Bond

- All dimensions and tolerances conform to ASME Y14.5M – 1994.
- Controlling dimension is in millimeters.
- Pin 1 may be indicated by an ID dot, or a special feature, in its proximity on the package surface.

Package Information	
Description	**Specification**
Ordering Code Reference	Q
Package Acronym	PQFP
Leadframe Material	Copper
Lead Finish (Plating)	Regular: 85Sn:15Pb (Typ.) Pb-free: Matte Sn
JEDEC Outline Reference	MS-022 Variation: GC-1
Lead Coplanarity	0.004 inches (0.10mm)
Weight	1.9 g (Typ.)
Moisture Sensitivity Level	Printed on moisture barrier bag

Package Outline Dimension Table			
Symbol	**Millimeters**		
	Min.	**Nom.**	**Max.**
A	—	—	3.40
A1	0.25	—	0.50
A2	2.50	2.70	2.90
D	17.20 BSC		
D1	14.00 BSC		
E	23.20 BSC		
E1	20.00 BSC		
L	0.73	0.88	1.03
L1	1.60 REF		
S	0.20	—	—
b	0.22	—	0.40
c	0.11	—	0.23
e	0.65 BSC		
θ	0°	—	7°

Package Outline

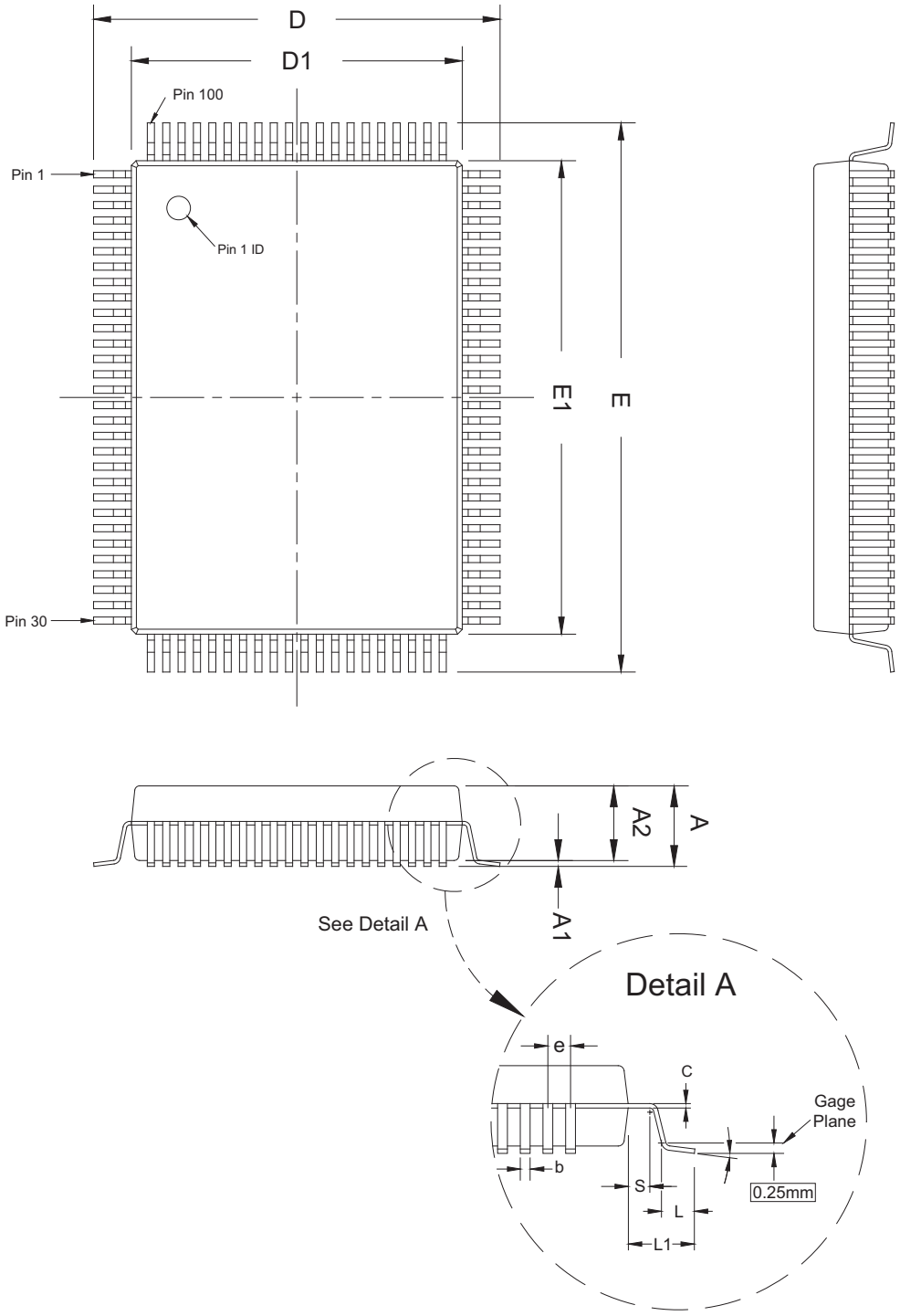

100-Pin Plastic Thin Quad Flat Pack (TQFP)—Wire Bond

- All dimensions and tolerances conform to ASME Y14.5M – 1994.
- Controlling dimension is in millimeters.
- Pin 1 may be indicated by an ID dot, or a special feature, in its proximity on package surface.

Package Information	
Description	**Specification**
Ordering Code Reference	T
Package Acronym	TQFP
Leadframe Material	Copper
Lead Finish (Plating)	Regular: 85Sn:15Pb (Typ.) Pb-free: Matte Sn
JEDEC Outline Reference	MS-026 Variation: AED
Lead Coplanarity	0.003 inches (0.08mm)
Weight	0.6 g (Typ.)
Moisture Sensitivity Level	Printed on moisture barrier bag

Package Outline Dimension Table			
Symbol	**Millimeters**		
	Min.	**Nom.**	**Max.**
A	—	—	1.20
A1	0.05	—	0.15
A2	0.95	1.00	1.05
D	16.00 BSC		
D1	14.00 BSC		
E	16.00 BSC		
E1	14.00 BSC		
L	0.45	0.60	0.75
L1	1.00 REF		
S	0.20	—	—
b	0.17	0.22	0.27
c	0.09	—	0.20
e	0.50 BSC		
θ	0°	3.5°	7°

Package Outline

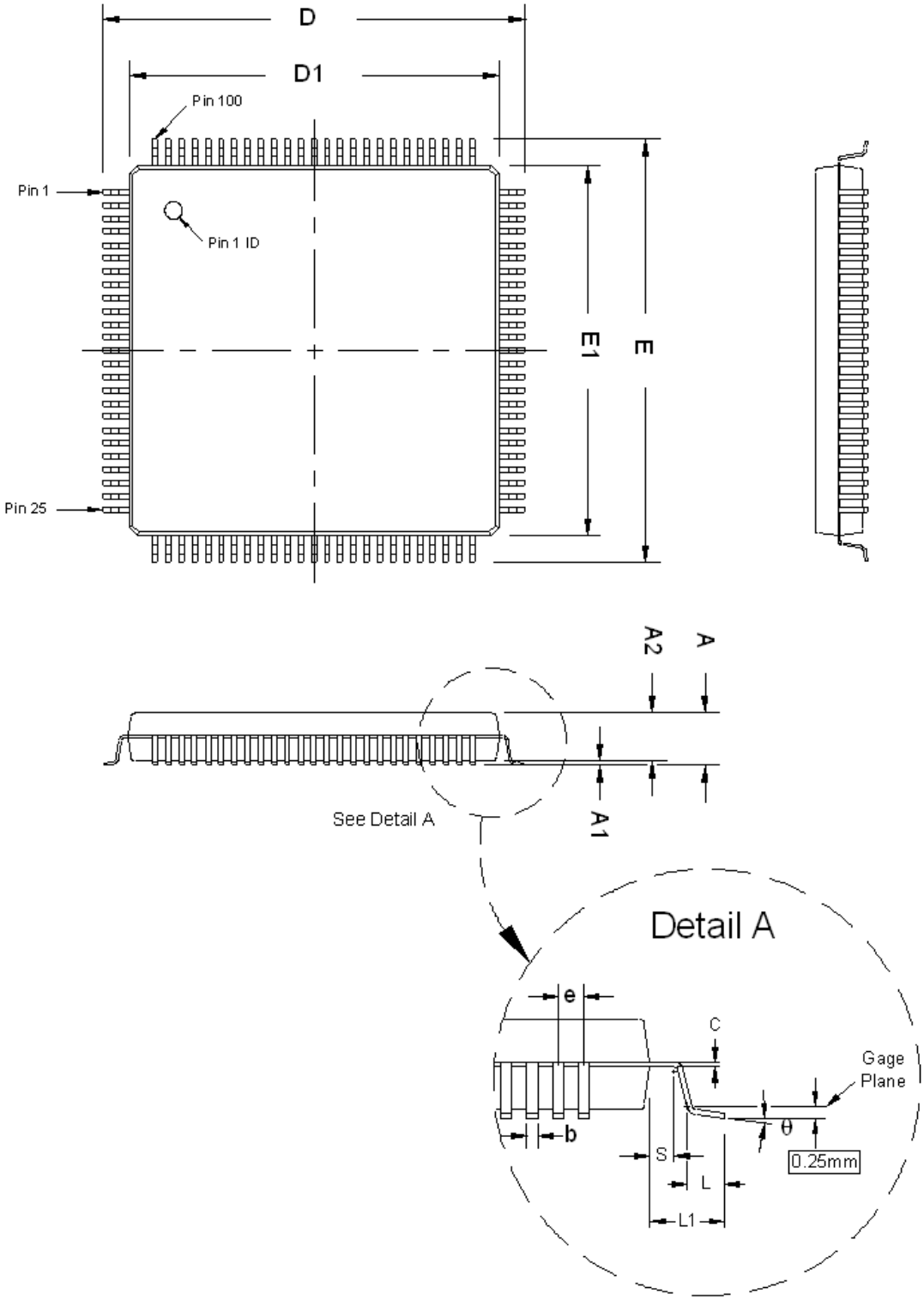

144-Pin Plastic Enhanced Quad Flat Pack (EQFP)—Wire Bond

- All dimensions and tolerances conform to ASME Y14.5M – 1994.
- Controlling dimension is in millimeters.
- Pin 1 may be indicated by an ID dot, or a special feature, in its proximity on package surface.

Package Information	
Description	**Specification**
Ordering Code Reference	E
Package Acronym	EQFP
Leadframe Material	Copper
Lead Finish (Plating)	Regular: 85Sn:15Pb (Typ.) Pb-free: Matte Sn
JEDEC Outline Reference	MS-026 Variation: BFB
Lead Coplanarity	0.003 inches (0.08mm)
Weight	1.1 g (Typ.)
Moisture Sensitivity Level	Printed on moisture barrier bag

Package Outline Dimension Table			
Symbol	**Millimeters**		
	Min.	**Nom.**	**Max.**
A	—	—	1.60
A1	0.05	—	0.15
A2	1.35	1.40	1.45
D	22.00 BSC		
D1	20.00 BSC		
D2	4.00	—	—
E	22.00 BSC		
E1	20.00 BSC		
E2	4.00	—	—
L	0.45	0.60	0.75
L1	1.00 REF		
S	0.20	—	—
b	0.17	0.22	0.27
c	0.09	—	0.20
e	0.50 BSC		
θ	0°	3.5°	7°

Package Outline

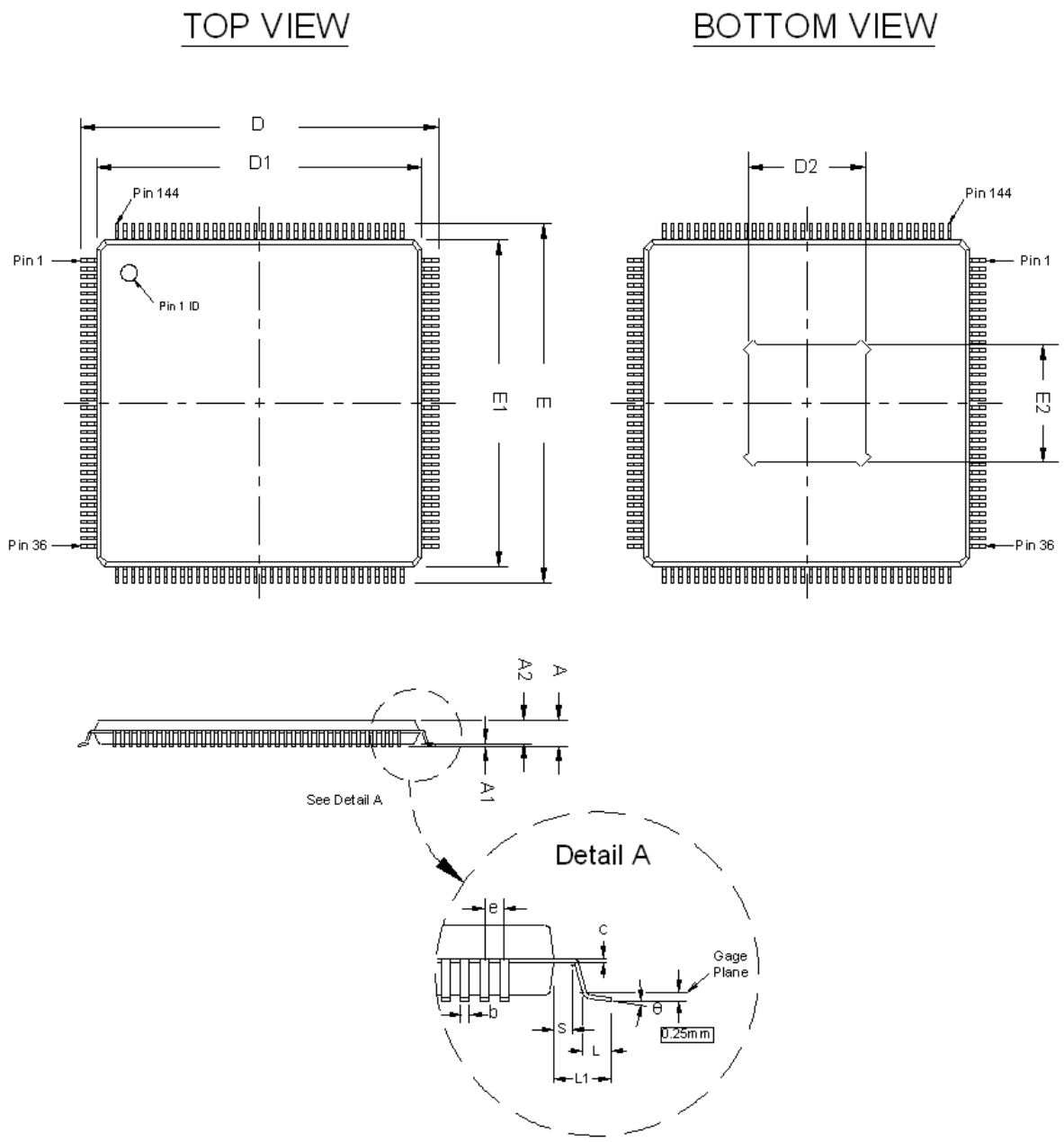

144-Pin FineLine Ball-Grid Array (FBGA)—Wire Bond

- All dimensions and tolerances conform to ASME Y14.5M – 1994.
- Controlling dimension is in millimeters.
- Pin A1 may be indicated by an ID dot, or a special feature, in its proximity on package surface.

Package Information	
Description	**Specification**
Ordering Code Reference	F
Package Acronym	FBGA
Substrate Material	BT
Solder Ball Composition	Regular: 63Sn:37Pb (Typ.) Pb-free: Sn:3Ag:0.5Cu (Typ.)
JEDEC Outline Reference	MO-192 Variation: AAD-1
Lead Coplanarity	0.008 inches (0.20mm)
Weight	0.8 g (Typ.)
Moisture Sensitivity Level	Printed on moisture barrier bag

Package Outline Dimension Table			
Symbol	**Millimeters**		
	Min.	**Nom.**	**Max.**
A	—	—	2.20
A1	0.30	—	—
A2	0.25	—	1.80
A3	0.70 REF		
D	13.00 BSC		
E	13.00 BSC		
b	0.50	0.60	0.70
e	1.00 BSC		

Package Outline

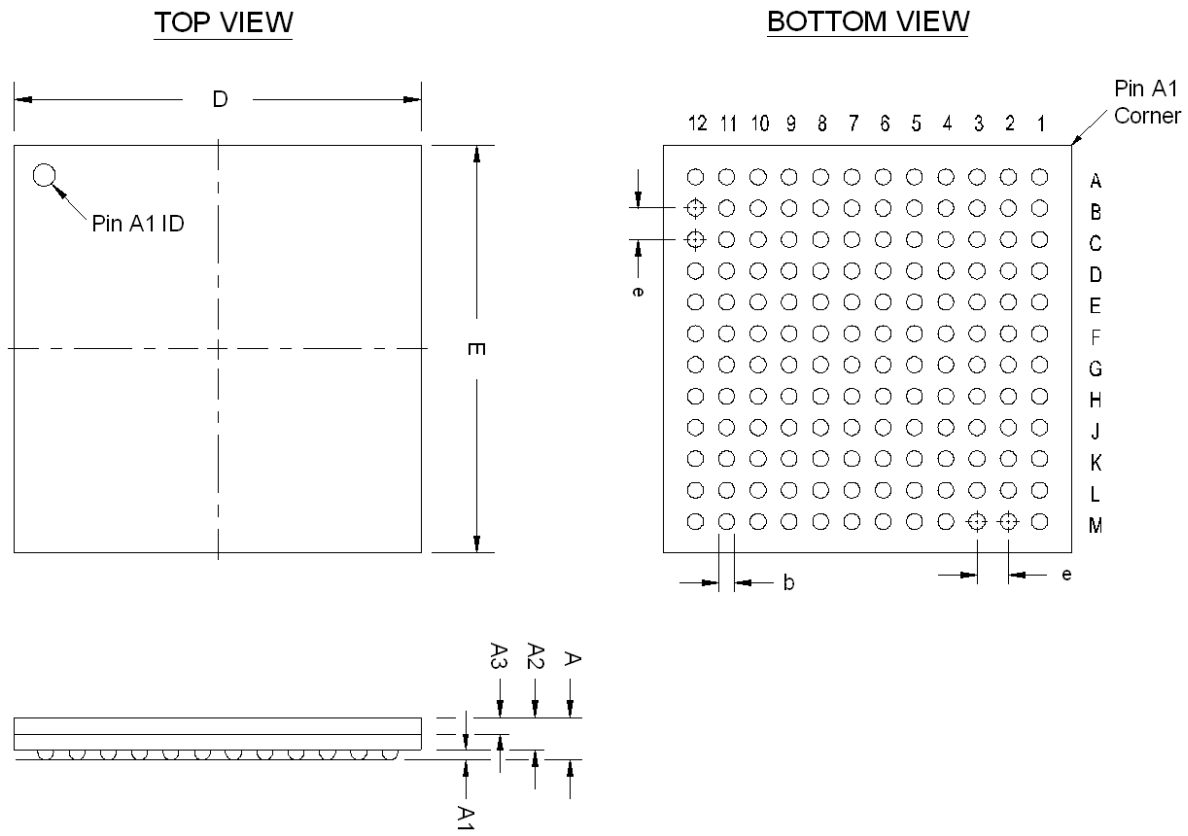

144-Pin Plastic Thin Quad Flat Pack (TQFP)—Wire Bond

- All dimensions and tolerances conform to ASME Y14.5M – 1994.
- Controlling dimension is in millimeters.
- Pin 1 may be indicated by an ID dot, or a special feature, in its proximity on package surface.

Package Information	
Description	**Specification**
Ordering Code Reference	T
Package Acronym	TQFP
Leadframe Material	Copper
Lead Finish (Plating)	Regular: 85Sn:15Pb (Typ.) Pb-free: Matte Sn
JEDEC Outline Reference	MS-026 Variation: BFB
Lead Coplanarity	0.003 inches (0.08mm)
Weight	1.1 g (Typ.)
Moisture Sensitivity Level	Printed on moisture barrier bag

Package Outline Dimension Table			
Symbol	**Millimeters**		
	Min.	**Nom.**	**Max.**
A	—	—	1.60
A1	0.05	—	0.15
A2	1.35	1.40	1.45
D	22.00 BSC		
D1	20.00 BSC		
E	22.00 BSC		
E1	20.00 BSC		
L	0.45	0.60	0.75
L1	1.00 REF		
S	0.20	—	—
b	0.17	0.22	0.27
c	0.09	—	0.20
e	0.50 BSC		
θ	0°	3.5°	7°

Package Outline

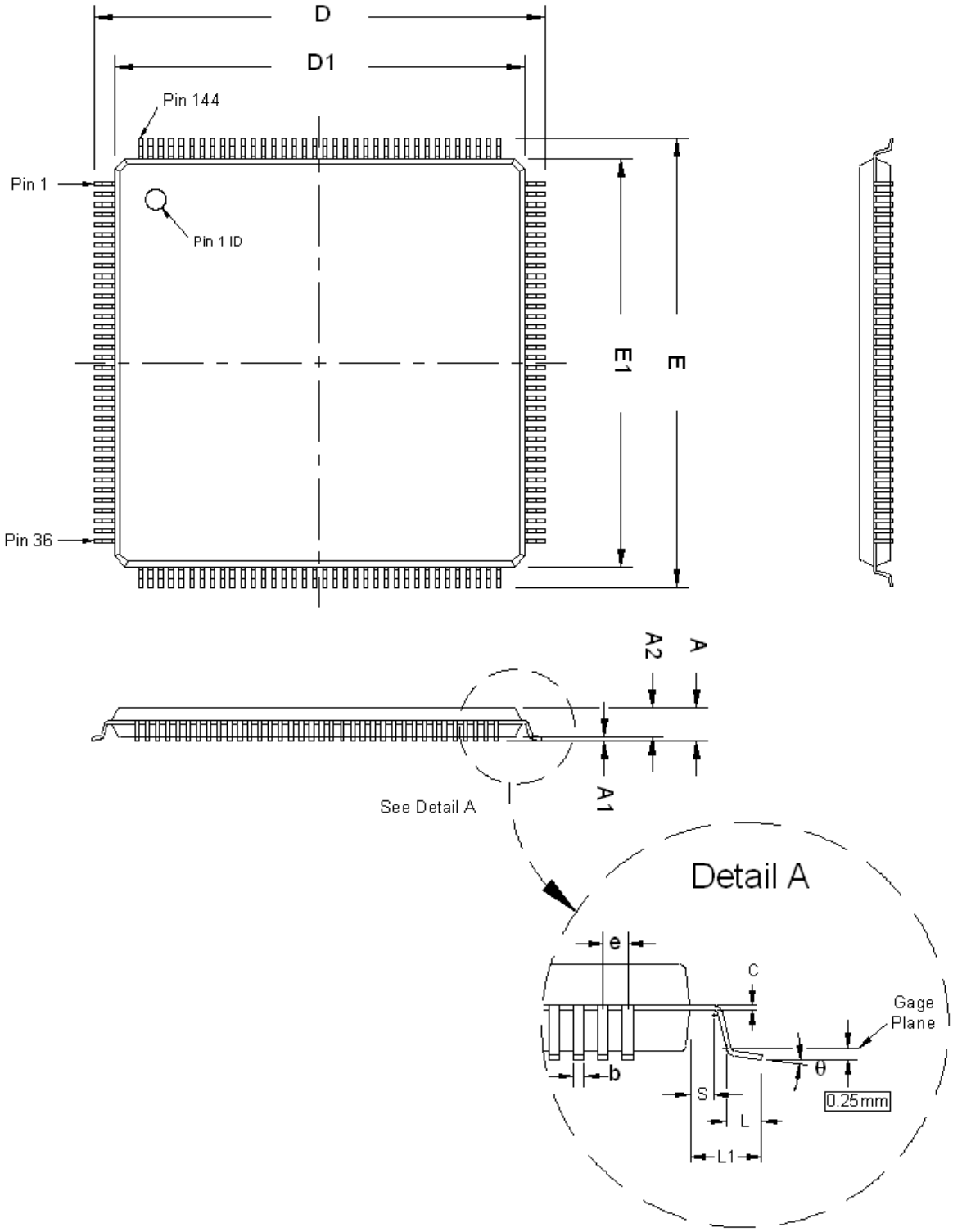

160-Pin Ceramic Pin-Grid Array (PGA)—Wire Bond

- All dimensions and tolerances conform to ASME Y14.5M – 1994.
- Controlling dimension is in inches.
- Pin A1 may be indicated by an ID dot, or a special feature, in its proximity on package surface.

Package Information	
Description	**Specification**
Ordering Code Reference	G
Package Acronym	PGA
Leadframe Material	Alloy 42
Lead Finish	Gold Over Nickel Plate
JEDEC Outline Reference	MO-067 Variation: AG
Lead Coplanarity	N/A
Weight	19.9 g (Typ.)
Moisture Sensitivity Level	Printed on moisture barrier bag

Package Outline Dimension Table			
Symbol	**Inches**		
	Min.	**Nom.**	**Max.**
A	0.160	0.190	0.220
A1	0.050 TYP		
A2	0.120	0.140	0.160
D	1.540	1.560	1.580
E	1.540	1.560	1.580
L	0.130 TYP		
b	0.016	0.018	0.020
e	0.100 BSC		

Package Outline

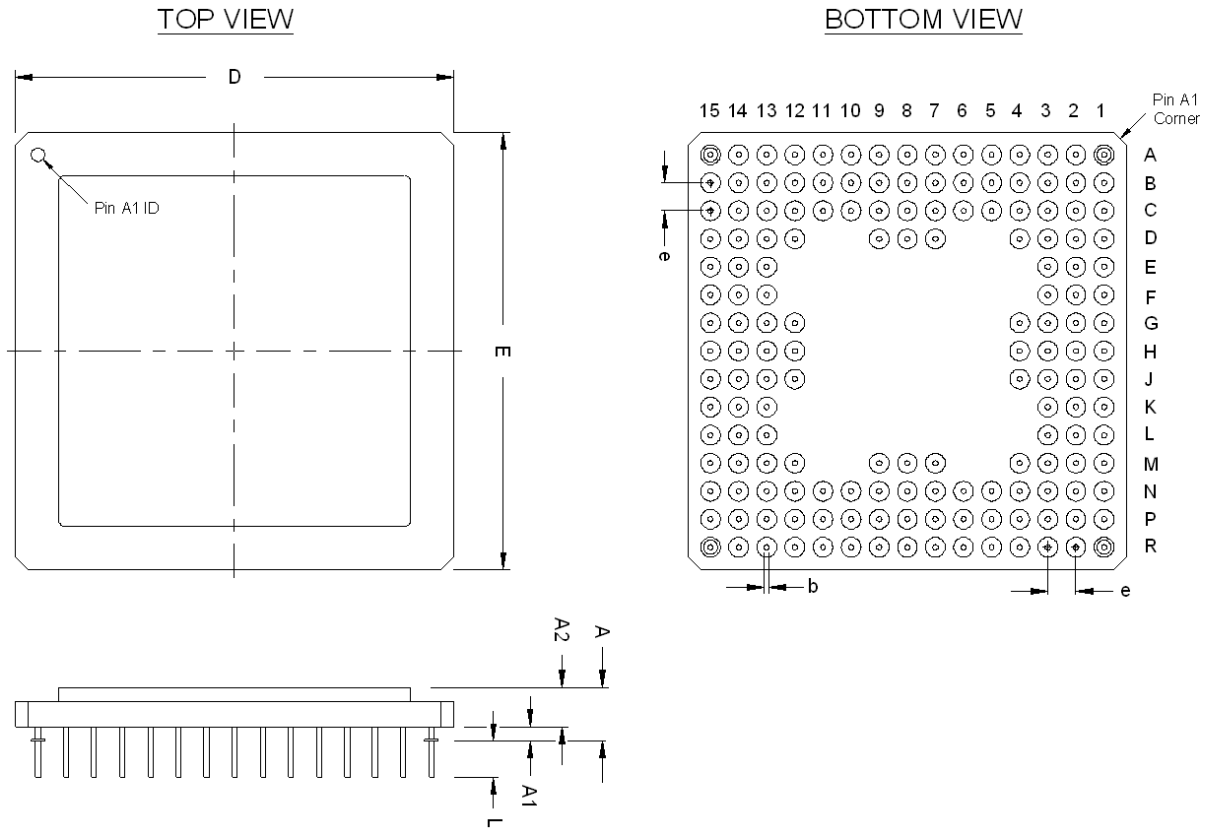

160-Pin Plastic Quad Flat Pack (PQFP)—Wire Bond

- All dimensions and tolerances conform to ASME Y14.5M – 1994.
- Controlling dimension is in millimeters.
- Pin 1 may be indicated by an ID dot, or a special feature, in its proximity on package surface.

Package Information	
Description	**Specification**
Ordering Code Reference	Q
Package Acronym	PQFP
Leadframe Material	Copper
Lead Finish (Plating)	Regular: 85Sn:15Pb (Typ.) Pb-free: Matte Sn
JEDEC Outline Reference	MS-022 Variation: DD-1
Lead Coplanarity	0.004 inches (0.10mm)
Weight	6.2 g (Typ.)
Moisture Sensitivity Level	Printed on moisture barrier bag

Package Outline Dimension Table			
Symbol	**Millimeters**		
	Min.	**Nom.**	**Max.**
A	—	—	4.10
A1	0.25	—	0.50
A2	3.20	3.40	3.60
D	31.20 BSC		
D1	28.00 BSC		
E	31.20 BSC		
E1	28.00 BSC		
L	0.50	—	1.03
L1	1.60 REF		
S	0.20	—	—
b	0.22	—	0.40
c	0.09	—	0.23
e	0.65 BSC		
θ	0°	—	7°

Package Outline

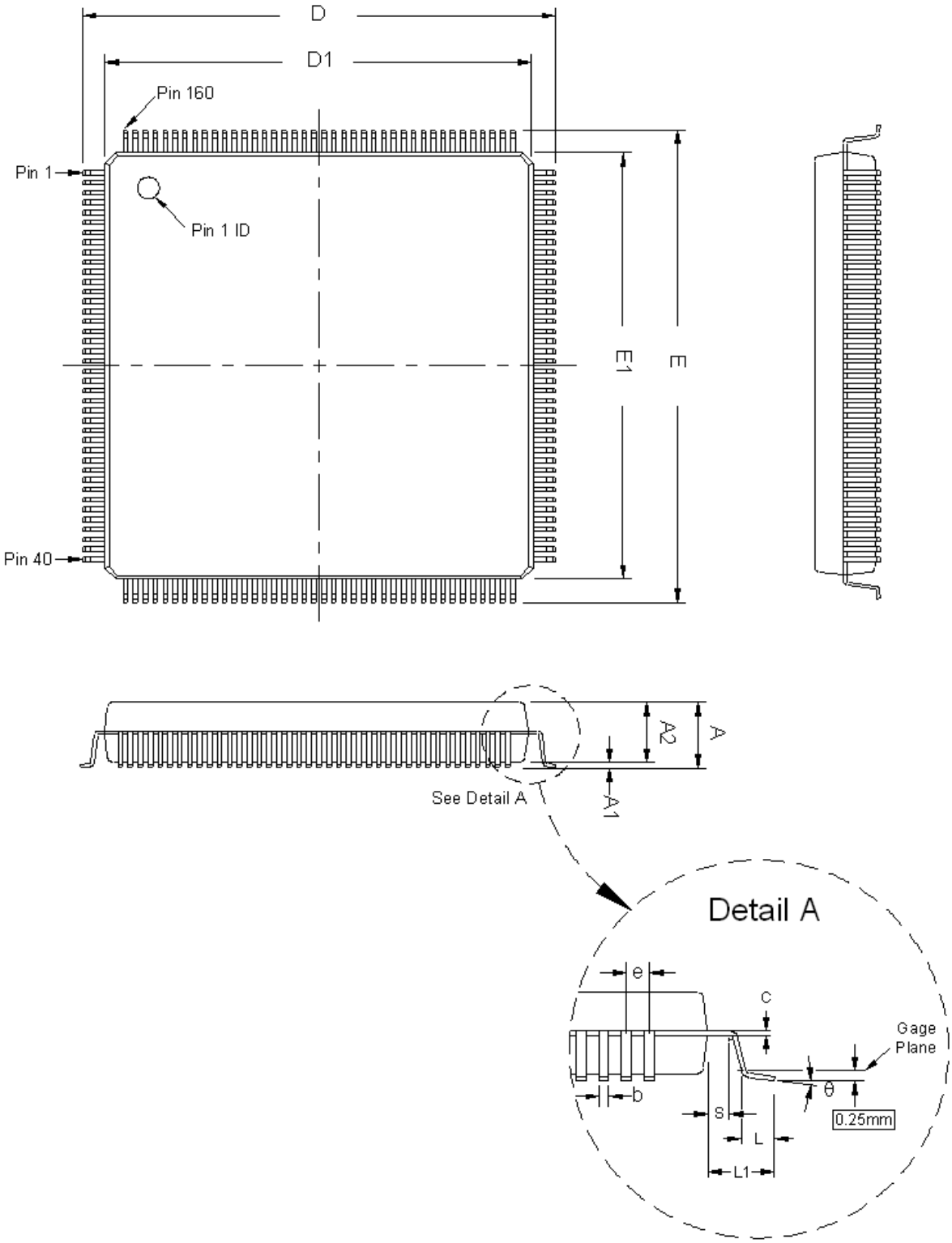

169-Pin Ultra FineLine Ball-Grid Array (UBGA)—Wire Bond

- All dimensions and tolerances conform to ASME Y14.5M – 1994.
- Controlling dimension is in millimeters.
- Pin A1 may be indicated by an ID dot, or a special feature, in its proximity on package surface.

Package Information	
Description	**Specification**
Ordering Code Reference	U
Package Acronym	UBGA
Substrate Material	BT
Solder Ball Composition	Regular: 63Sn:37Pb (Typ.) Pb-free: Sn:3Ag:0.5Cu (Typ.)
JEDEC Outline Reference	MO-216 Variation: BAF-1
Lead Coplanarity	0.005 inches (0.12mm)
Weight	0.6 g (Typ.)
Moisture Sensitivity Level	Printed on moisture barrier bag

Package Outline Dimension Table			
Symbol	**Millimeters**		
	Min.	**Nom.**	**Max.**
A	—	—	1.70
A1	0.20	—	—
A2	0.65	—	—
A3	0.70 TYP		
D	11.00 BSC		
E	11.00 BSC		
b	0.40	0.50	0.60
e	0.80 BSC		

Package Outline

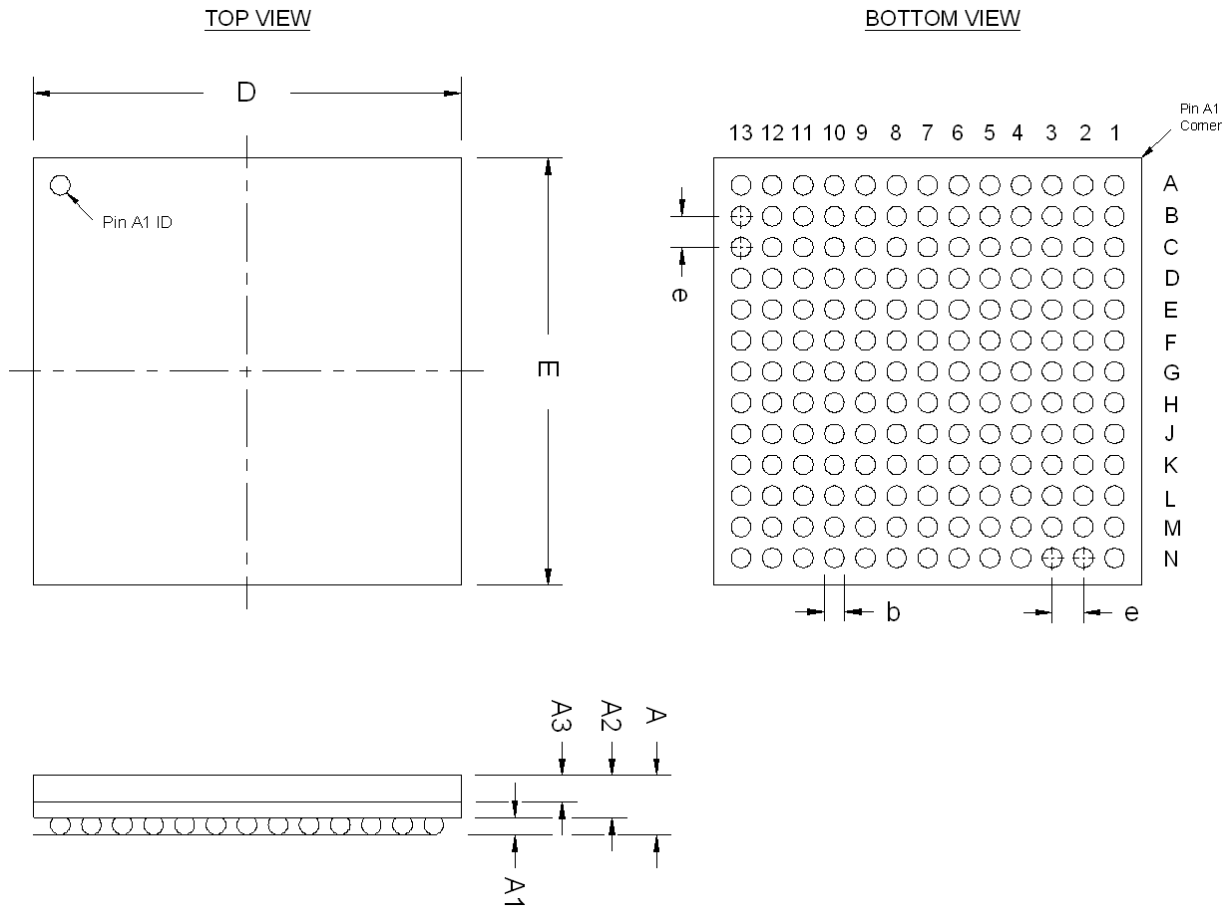

208-Pin Plastic Quad Flat Pack (PQFP)—Wire Bond

- All dimensions and tolerances conform to ASME Y14.5M - 1994.
- Controlling dimension is in millimeters.
- Pin 1 may be indicated by an ID dot in its proximity on package surface.

Package Information	
Description	**Specification**
Ordering Code Reference	Q
Package Acronym	PQFP
Lead Material	Copper
Lead Finish (Plating)	Regular: 85Sn:15Pb (Typ.) Pb-free: Matte Sn
JEDEC Outline Reference	MS-029 Variation: FA-1
Lead Coplanarity	0.003 inches (0.08 mm)
Weight	6.3 g (Typ.)
Moisture Sensitivity Level	Printed on moisture barrier bag

Package Outline Dimension Table			
Symbol	**Millimeters**		
	Min.	**Nom.**	**Max.**
A	—	—	4.10
A1	0.25	—	0.50
A2	3.20	3.40	3.60
D	30.60 BSC		
D1	28.00 BSC		
E	30.60 BSC		
E1	28.00 BSC		
L	0.50	0.60	0.75
L1	1.30 REF		
S	0.20	—	—
b	0.17	—	0.27
c	0.09	—	0.20
e	0.50 BSC		
θ	0°	3.5°	8°

Package Outline

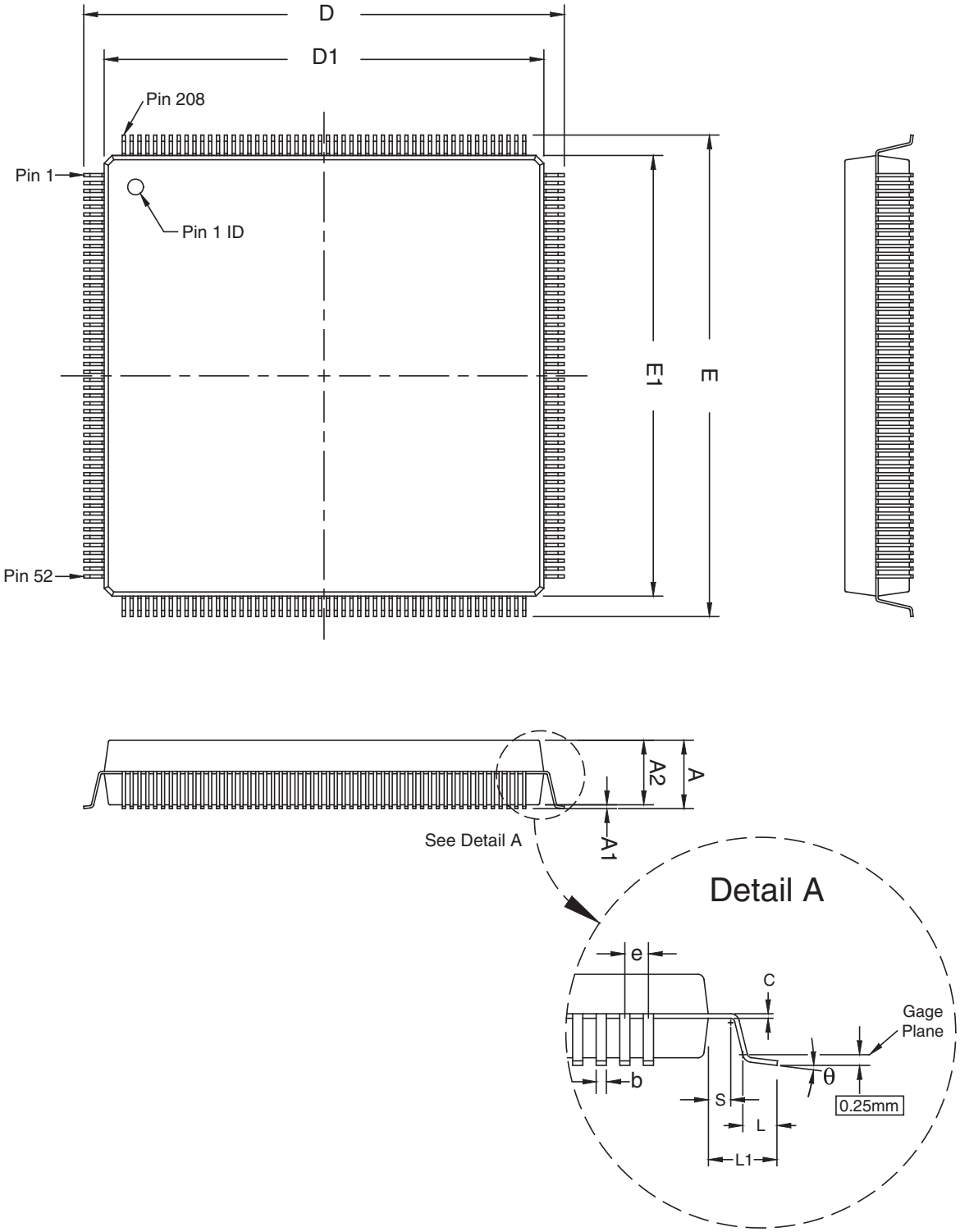

208-Pin Power Quad Flat Pack (RQFP)—Wire Bond

- All dimensions and tolerances conform to ASME Y14.5M – 1994.
- Controlling dimension is in millimeters.
- Pin 1 may be indicated by an ID dot, or a special feature, in its proximity on package surface.

Package Information	
Description	**Specification**
Ordering Code Reference	R
Package Acronym	RQFP
Leadframe Material	Copper
Lead Finish (Plating)	Regular: 85Sn:15Pb (Typ.) Pb-free: Matte Sn
JEDEC Outline Reference	MS-029 Variation: FA-1
Lead Coplanarity	0.003 inches (0.08mm)
Weight	11.0 g (Typ.) or 6.4 g (Typ.) *(1)*
Moisture Sensitivity Level	Printed on moisture barrier bag

Note:

(1) The lighter weight is due to the change in heat slug material used (from nickel-plated copper to anodized aluminum). Refer to PCN1002.

Package Outline Dimension Table			
Symbol	**Millimeters**		
	Min.	**Nom.**	**Max.**
A	—	—	4.10
A1	0.25	—	0.50
A2	3.20	3.40	3.60
D	30.60 BSC		
D1	28.00 BSC		
E	30.60 BSC		
E1	28.00 BSC		
L	0.45	0.60	0.75
L1	1.30 REF		
S	0.20	—	—
b	0.17	—	0.27
c	0.09	—	0.20
e	0.50 BSC		
θ	0°	3.5°	8°

Package Outline

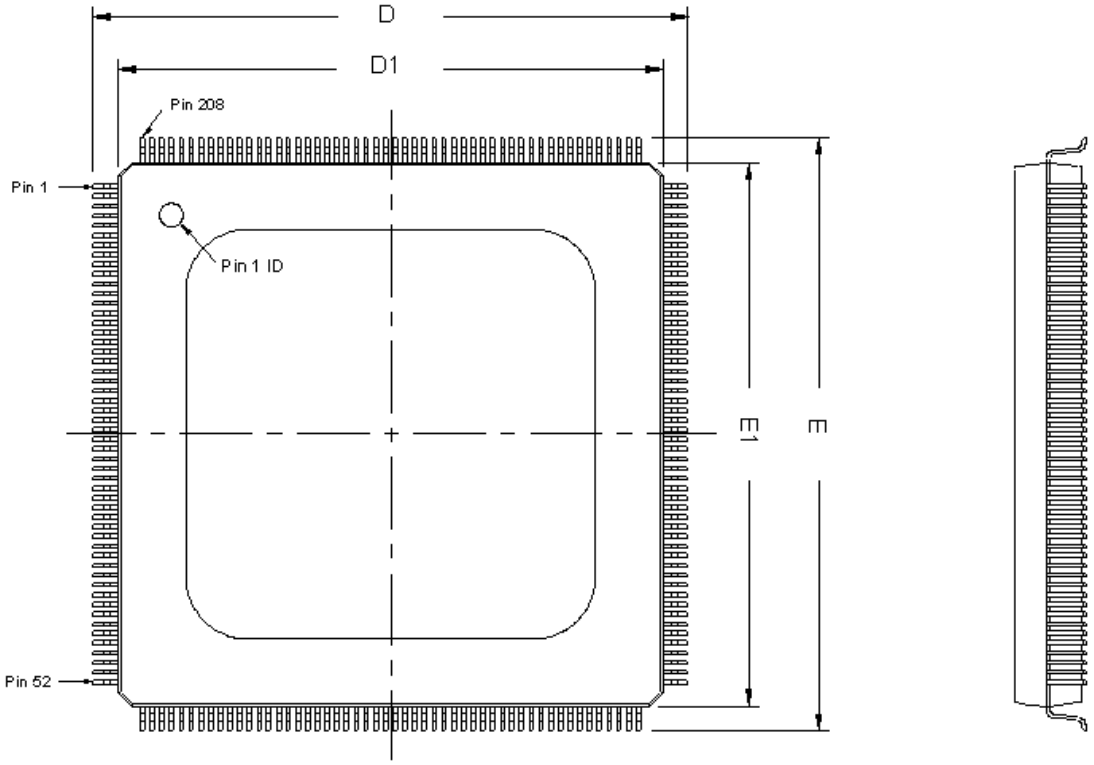

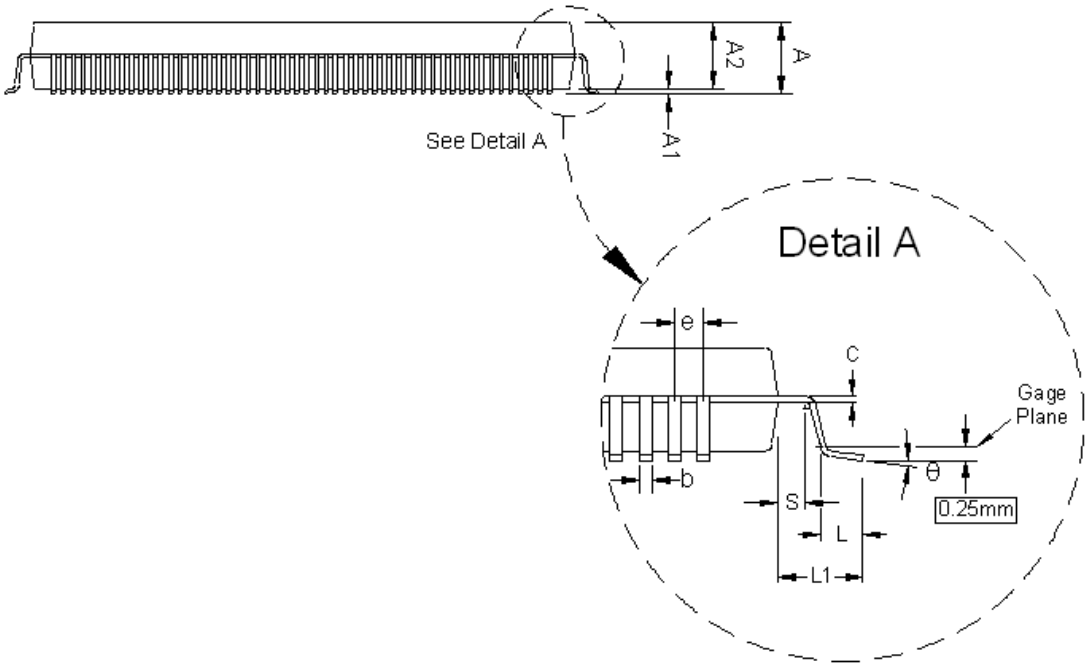

240-Pin Plastic Quad Flat Pack (PQFP)—Wire Bond

- All dimensions and tolerances conform to ASME Y14.5M – 1994.
- Controlling dimension is in millimeters.
- Pin 1 may be indicated by an ID dot, or a special feature, in its proximity on package surface.

Package Information	
Description	**Specification**
Ordering Code Reference	Q
Package Acronym	PQFP
Leadframe Material	Copper
Lead Finish (Plating)	Regular: 85Sn:15Pb (Typ.) Pb-free: Matte Sn
JEDEC Outline Reference	MS-029 Variation: GA
Lead Coplanarity	0.003 inches (0.08mm)
Weight	8.0 g (Typ.)
Moisture Sensitivity Level	Printed on moisture barrier bag

Package Outline Dimension Table			
Symbol	**Millimeters**		
	Min.	**Nom.**	**Max.**
A	—	—	4.10
A1	0.25	—	0.50
A2	3.20	3.40	3.60
D	34.60 BSC		
D1	32.00 BSC		
E	34.60 BSC		
E1	32.00 BSC		
L	0.45	0.60	0.75
L1	1.30 REF		
S	0.20	—	—
b	0.17	—	0.27
c	0.09	—	0.20
e	0.50 BSC		
θ	0°	3.5°	8°

Package Outline

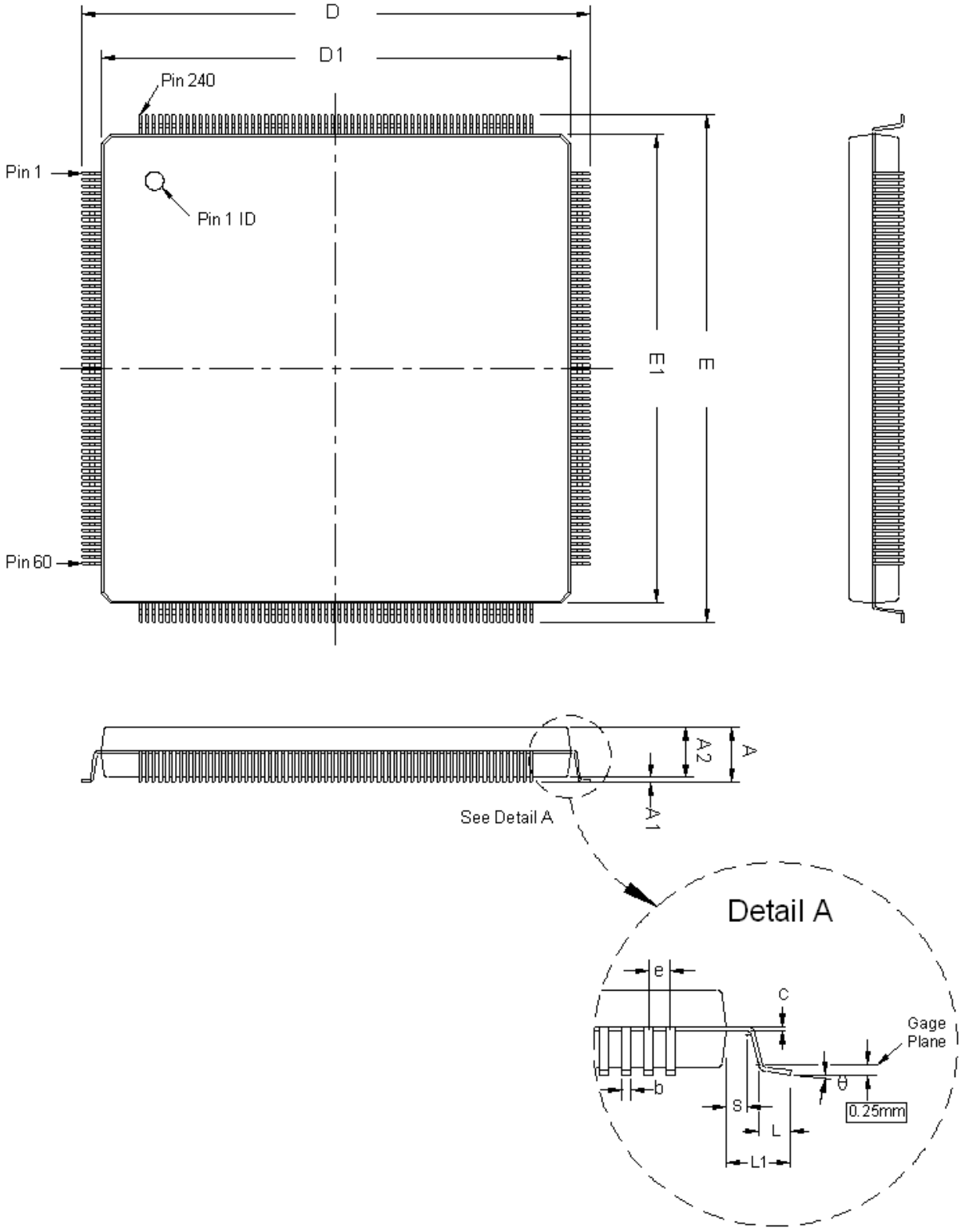

240-Pin Power Quad Flat Pack (RQFP)—Wire Bond

- All dimensions and tolerances conform to ASME Y14.5M – 1994.
- Controlling dimension is in millimeters.
- Pin 1 may be indicated by an ID dot, or a special feature, in its proximity on package surface.

Package Information	
Description	**Specification**
Ordering Code Reference	R
Package Acronym	RQFP
Leadframe Material	Copper
Lead Finish (Plating)	Regular: 85Sn:15Pb (Typ.) Pb-free: Matte Sn
JEDEC Outline Reference	MS-029 Variation: GA
Lead Coplanarity	0.003 inches (0.08mm)
Weight	15.4 g (Typ.) or 8.5 g (Typ.) *(1)*
Moisture Sensitivity Level	Printed on moisture barrier bag

Note:

(1) The lighter weight is due to the change in heat slug material used (from nickel-plated copper to anodized aluminum). Refer to PCN1002.

Package Outline Dimension Table			
Symbol	**Millimeters**		
	Min.	**Nom.**	**Max.**
A	—	—	4.10
A1	0.25	—	0.50
A2	3.20	3.40	3.60
D	34.60 BSC		
D1	32.00 BSC		
E	34.60 BSC		
E1	32.00 BSC		
L	0.45	0.60	0.75
L1	1.30 REF		
S	0.20	—	—
b	0.17	—	0.27
c	0.09	—	0.20
e	0.50 BSC		
θ	0°	3.5°	8°

Package Outline

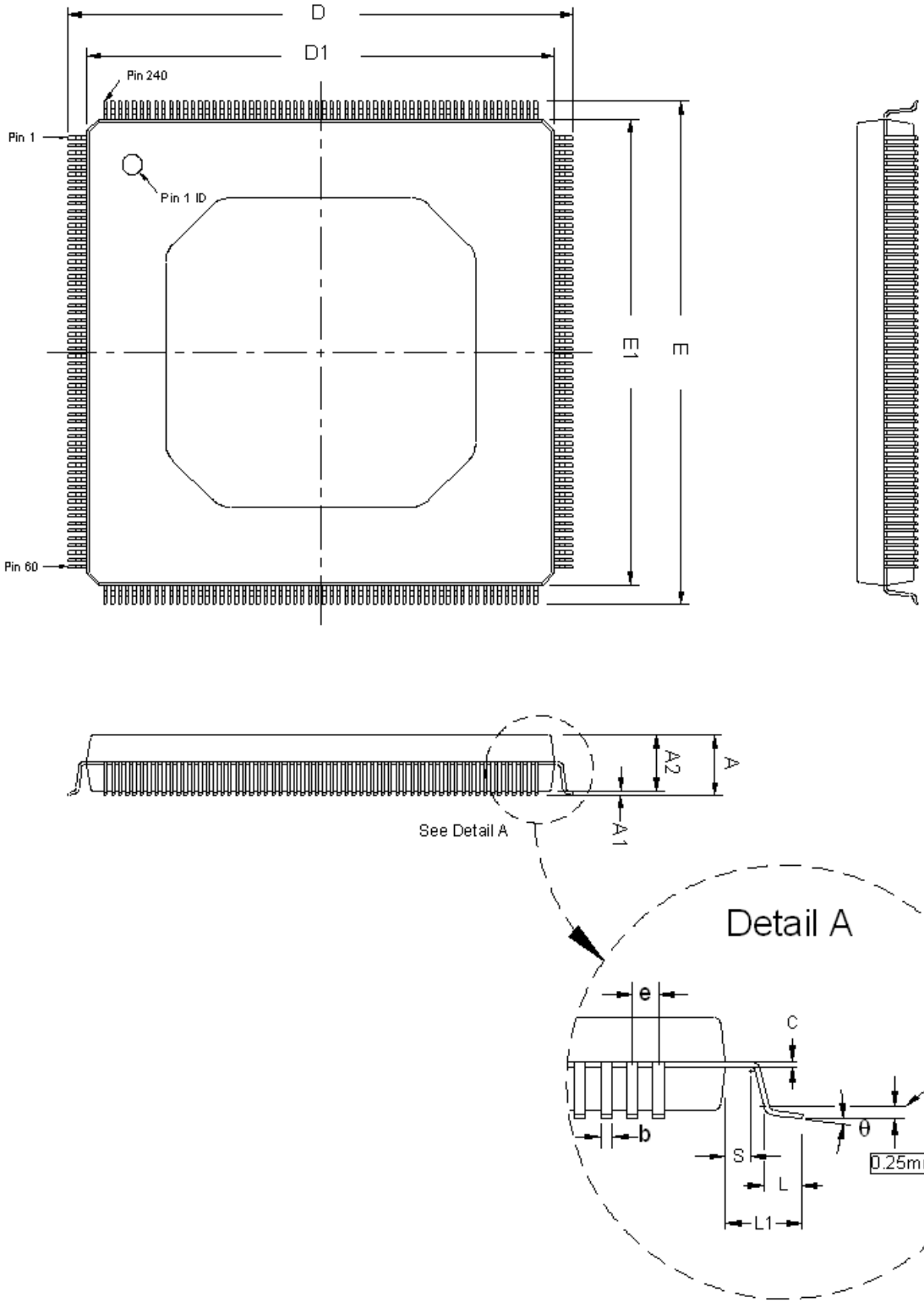

256-Pin Ball-Grid Array (BGA), Option 1—Wire Bond

- All dimensions and tolerances conform to ASME Y14.5M - 1994.
- Controlling dimension is in millimeters.
- Pin A1 may be indicated by an ID dot, or a special feature, in its proximity on package surface.

Package Information	
Description	**Specification**
Ordering Code Reference	B
Package Acronym	BGA
Substrate Material	BT or tape
Solder Ball Composition	Regular: 63Sn:37Pb (Typ.) Pb-free: Sn:3Ag:0.5Cu (Typ.)
JEDEC Outline Reference	MO-192 Variation: BAL-2
Lead Coplanarity	0.008 inches (0.20 mm)
Weight	4.8 g (Typ.)
Moisture Sensitivity Level	Printed on moisture barrier bag

Package Outline Dimension Table			
Symbol	**Millimeters**		
	Min.	**Nom.**	**Max.**
A	—	—	1.70
A1	0.35	—	—
A2	0.25	—	1.10
D	27.00 BSC		
E	27.00 BSC		
b	0.60	0.75	0.90
e	1.27 BSC		

Package Outline

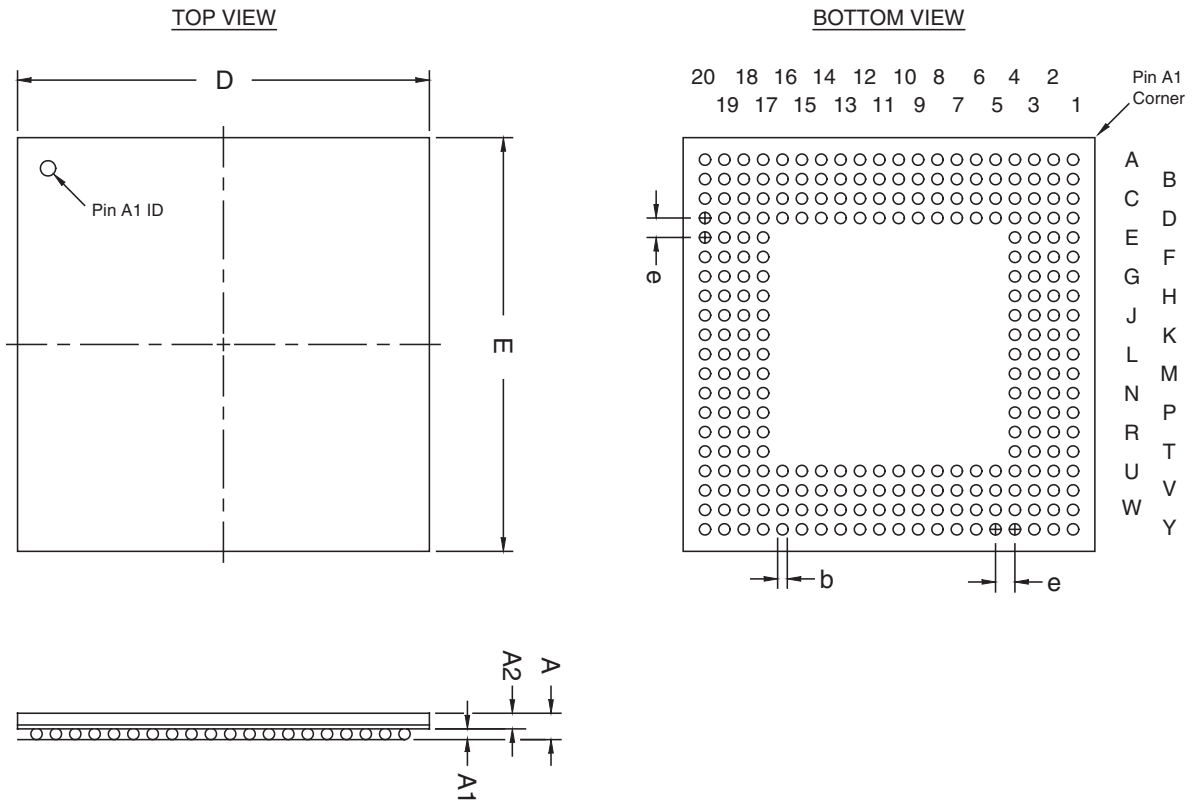

256-Pin Plastic Ball-Grid Array (BGA), Option 2—Wire Bond

- All dimensions and tolerances conform to ASME Y14.5M - 1994.
- Controlling dimension is in millimeters.
- Pin A1 may be indicated by an ID dot, or a special feature, in its proximity on package surface.

Package Information	
Description	**Specification**
Ordering Code Reference	B
Package Acronym	BGA
Substrate Material	BT
Solder Ball Composition	Regular: 63Sn:37Pb (Typ.) Pb-free: Sn:3Ag:0.5Cu (Typ.)
JEDEC Outline Reference	MS-034 Variation: BAL-2
Lead Coplanarity	0.008 inches (0.20 mm)
Weight	2.2 g (Typ.)
Moisture Sensitivity Level	Printed on moisture barrier bag

Package Outline Dimension Table			
Symbol	**Millimeters**		
	Min.	**Nom.**	**Max.**
A	—	—	2.60
A1	0.35	—	—
A2	—	—	2.20
A3	—	—	1.80
D	27.00 BSC		
E	27.00 BSC		
b	0.60	0.75	0.90
e	1.27 BSC		

Package Outline

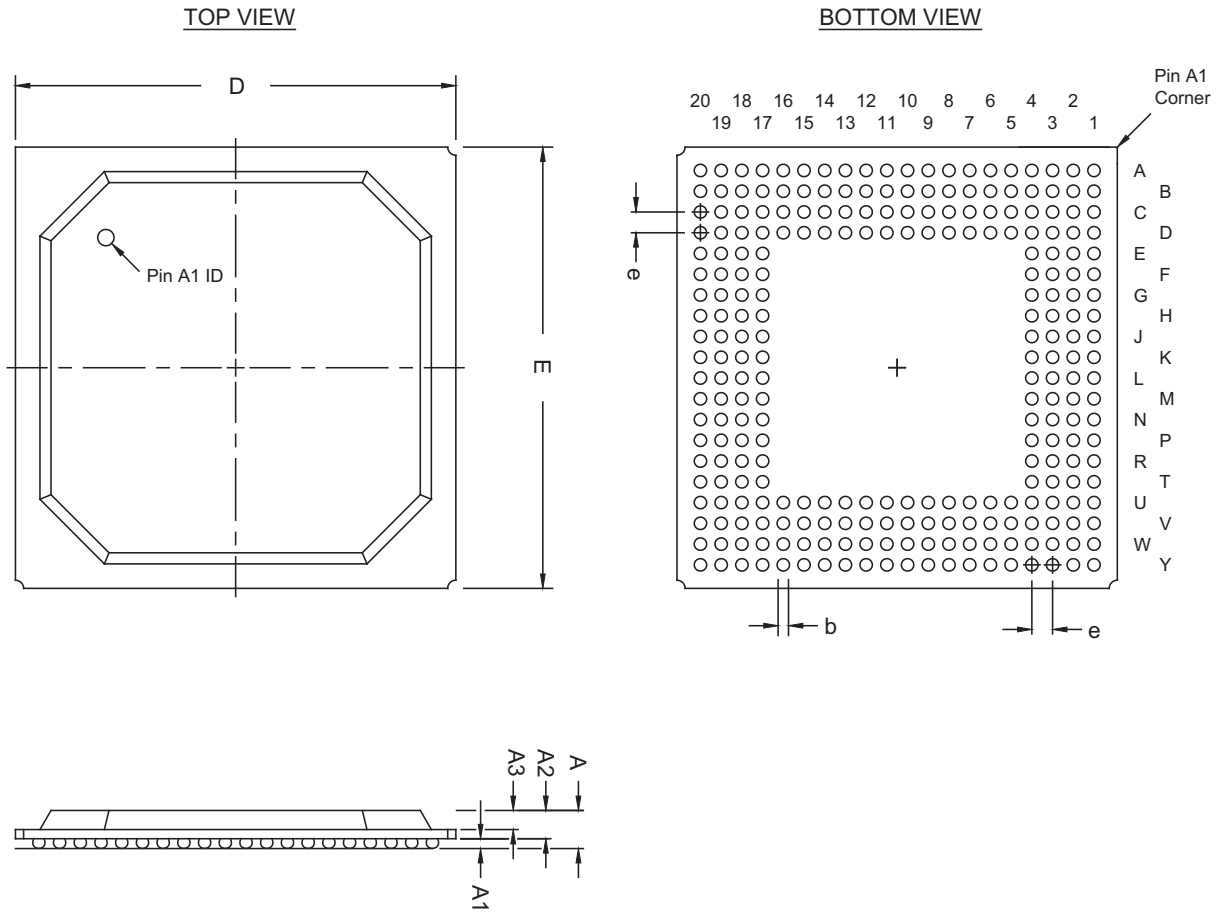

256-Pin FineLine Ball-Grid Array (FBGA), Option 1—Wire Bond

- All dimensions and tolerances conform to ASME Y14.5M - 1994.
- Controlling dimension is in millimeters.
- Pin A1 may be indicated by an ID dot, or a special feature, in its proximity on package surface.

☞ This POD is applicable to F256 packages of all products listed in this datasheet except Cyclone II, which are assembled in Option 2 package outlines.

Package Information	
Description	**Specification**
Ordering Code Reference	F
Package Acronym	FBGA
Substrate Material	BT
Solder Ball Composition	Regular: 63Sn:37Pb (Typ.) Pb-free: Sn:3Ag:0.5Cu (Typ.)
JEDEC Outline Reference	MS-034 Variation: AAF-1
Lead Coplanarity	0.008 inches (0.20 mm)
Weight	1.5 g (Typ.)
Moisture Sensitivity Level	Printed on moisture barrier bag

Package Outline Dimension Table			
Symbol	**Millimeters**		
	Min.	**Nom.**	**Max.**
A	—	—	2.20
A1	0.30	—	—
A2	—	—	1.80
A3	0.70 REF		
D	17.00 BSC		
E	17.00 BSC		
b	0.50	0.60	0.70
e	1.00 BSC		

Package Outline

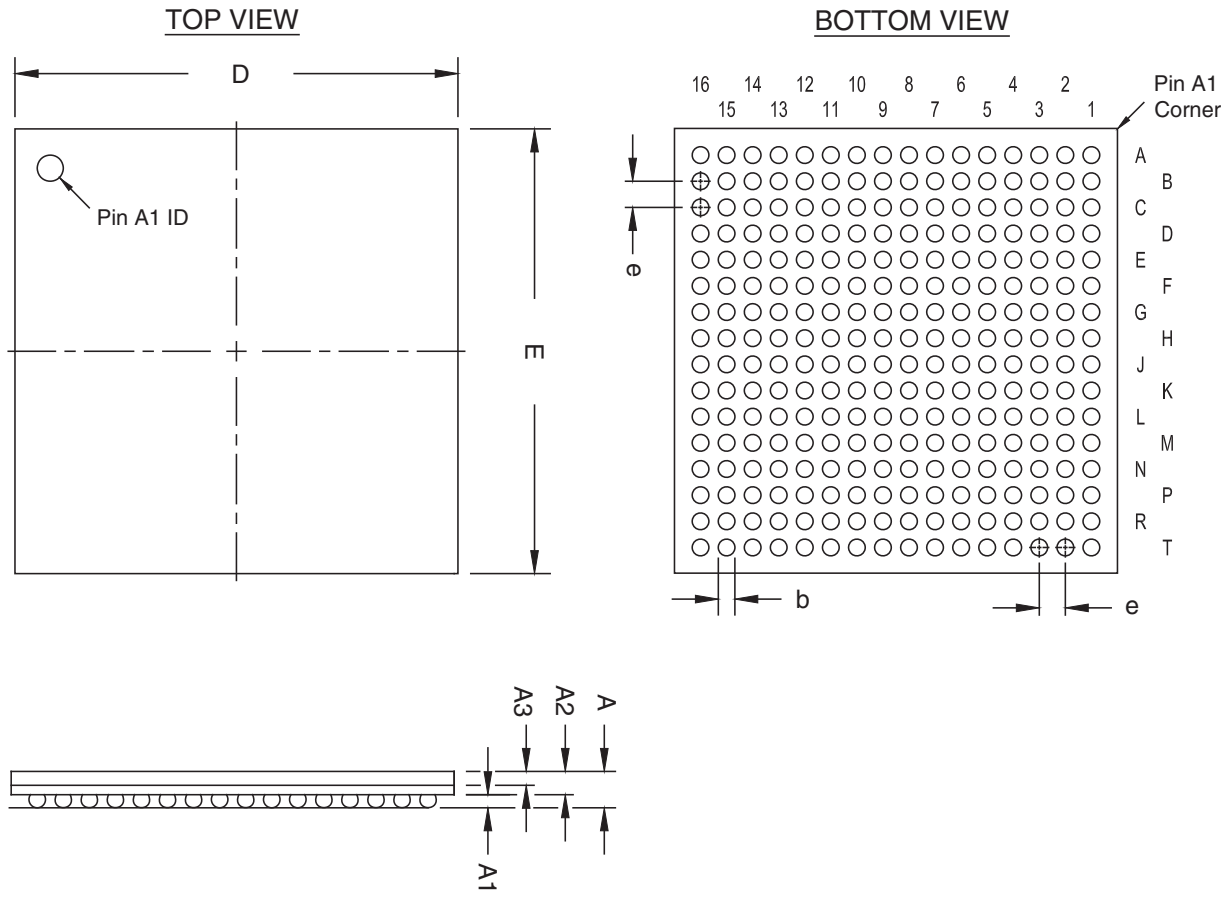

256-Pin FineLine Ball-Grid Array (FBGA), Option 2—Thin—Wire Bond

- All dimensions and tolerances conform to ASME Y14.5M - 1994.
- Controlling dimension is in millimeters.
- Pin A1 may be indicated by an ID dot, or a special feature, in its proximity on the package surface.

☞ This POD is applicable to F256 packages of the Cyclone II devices only.

Package Information	
Description	**Specification**
Ordering Code Reference	F
Package Acronym	FBGA
Substrate Material	BT
Solder Ball Composition	Regular: 63Sn:37Pb (Typ.) Pb-free: Sn:3Ag:0.5Cu (Typ.)
JEDEC Outline Reference	MO-192 Variation: DAF-1
Lead Coplanarity	0.008 inches (0.20 mm)
Weight	1.5 g (Typ.)
Moisture Sensitivity Level	Printed on moisture barrier bag

Package Outline Dimension Table			
Symbol	**Millimeters**		
	Min.	**Nom.**	**Max.**
A	—	—	1.55
A1	0.25	—	—
A2	1.05 REF		
A3	—	—	0.80
D	17.00 BSC		
E	17.00 BSC		
b	0.45	0.50	0.55
e	1.00 BSC		

Package Outline

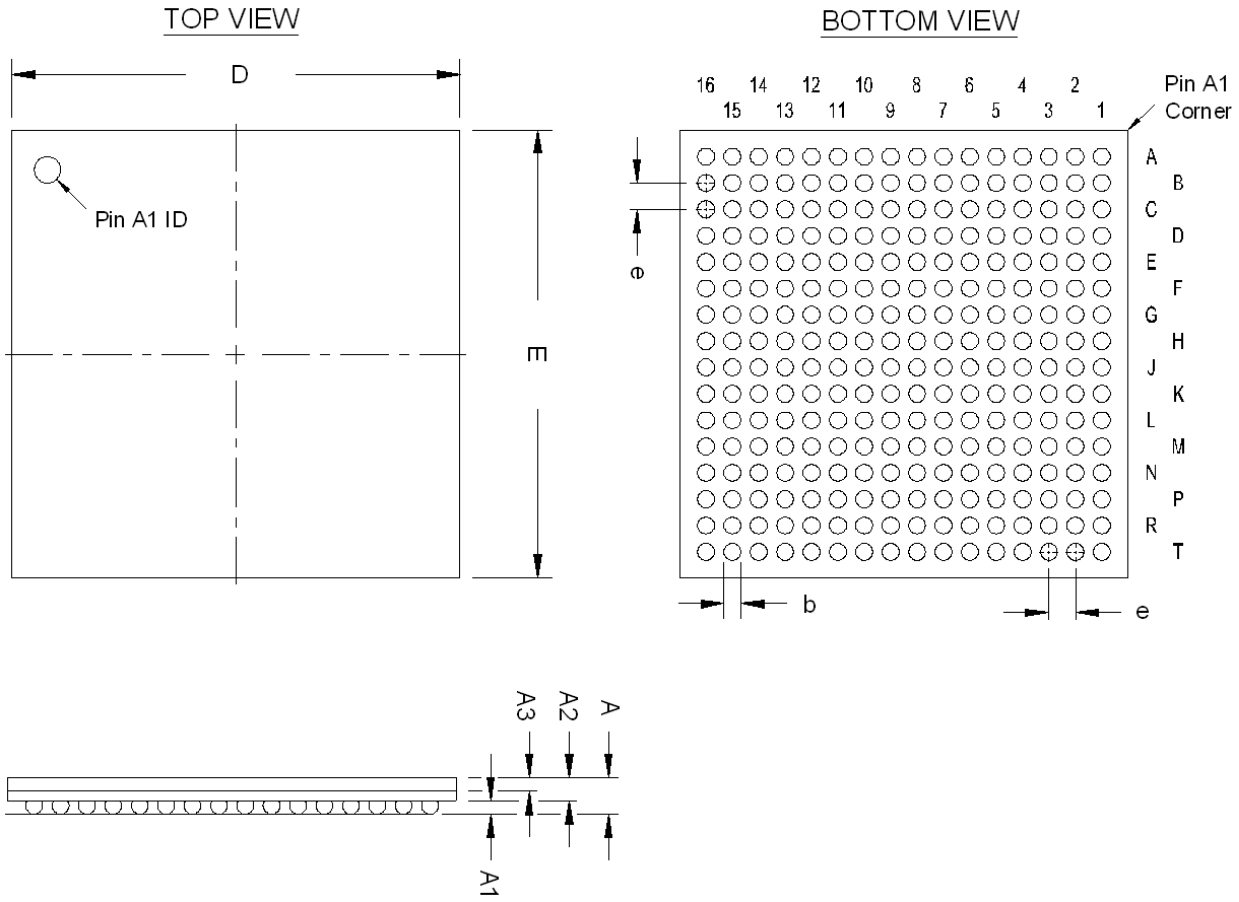

324-Pin FineLine Ball-Grid Array (FBGA)—Wire Bond—Option 1

- All dimensions and tolerances conform to ASME Y14.5M – 1994.
- Controlling dimension is in millimeters.
- Pin A1 may be indicated by an ID dot, or a special feature, in its proximity on package surface.

Package Information	
Description	**Specification**
Ordering Code Reference	F
Package Acronym	FBGA
Substrate Material	BT
Solder Ball Composition	Regular: 63Sn:37Pb (Typ.) Pb-free: Sn:3Ag:0.5Cu (Typ.)
JEDEC Outline Reference	MS-034 Variation: AAG-1
Lead Coplanarity	0.008 inches (0.20mm)
Weight	1.4 g (Typ.)
Moisture Sensitivity Level	Printed on moisture barrier bag

Package Outline Dimension Table			
Symbol	**Millimeters**		
	Min.	**Nom.**	**Max.**
A	—	—	2.20
A1	0.30	—	—
A2	—	—	1.80
A3	0.70 REF		
D	19.00 BSC		
E	19.00 BSC		
b	0.50	0.60	0.70
e	1.00 BSC		

Package Outline

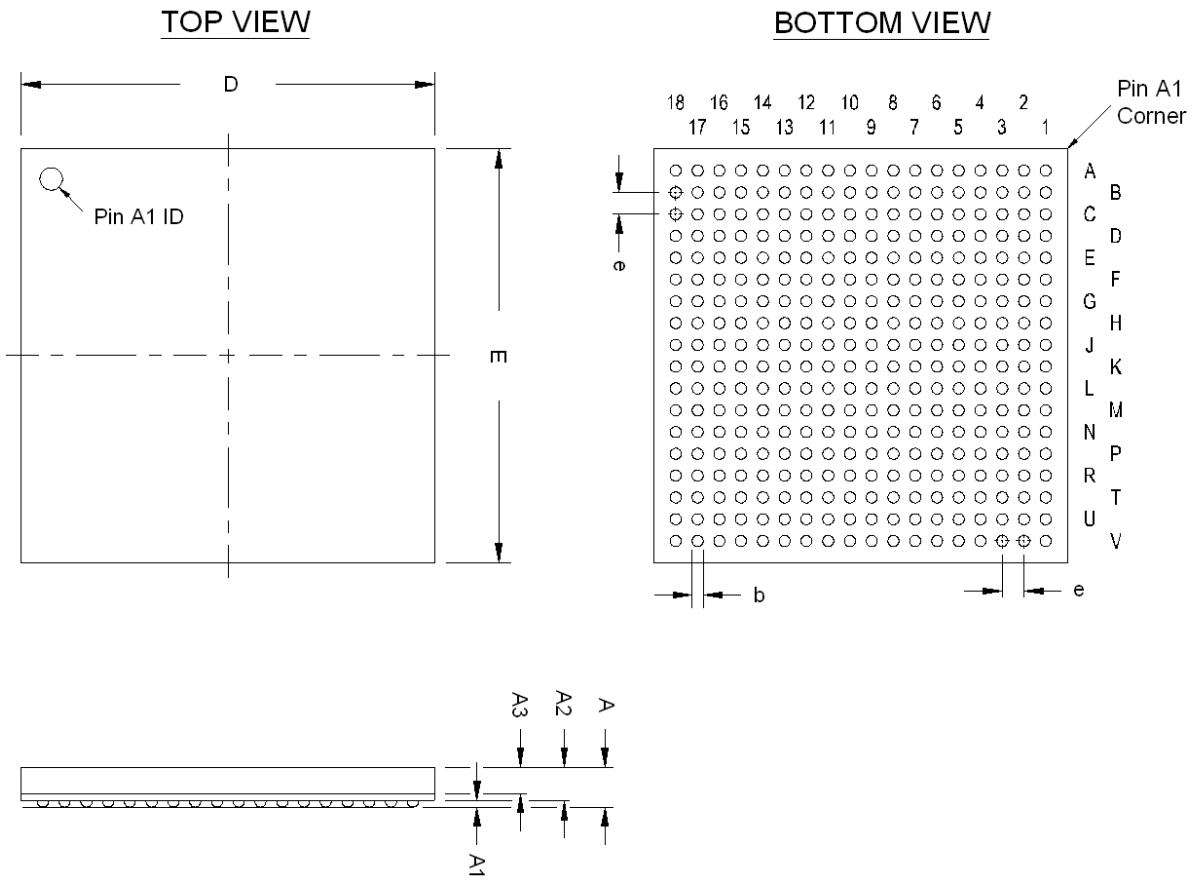

356-Pin Ball-Grid Array (BGA)—Wire Bond

- All dimensions and tolerances conform to ASME Y14.5M – 1994.
- Controlling dimension is in millimeters.
- Pin A1 may be indicated by an ID dot, or a special feature, in its proximity on package surface.

Package Information	
Description	**Specification**
Ordering Code Reference	B
Package Acronym	BGA
Substrate Material	BT or tape
Solder Ball Composition	Regular: 63Sn:37Pb (Typ.) Pb-free: Sn:3Ag:0.5Cu (Typ.)
JEDEC Outline Reference	MO-192 Variation: BAR-2
Lead Coplanarity	0.008 inches (0.20mm)
Weight	7.7 g (Typ.)
Moisture Sensitivity Level	Printed on moisture barrier bag

Package Outline Dimension Table			
Symbol	**Millimeters**		
	Min.	**Nom.**	**Max.**
A	—	—	1.70
A1	0.35	—	—
A2	0.25	—	1.10
D	35.00 BSC		
E	35.00 BSC		
b	0.60	0.75	0.90
e	1.27 BSC		

Package Outline

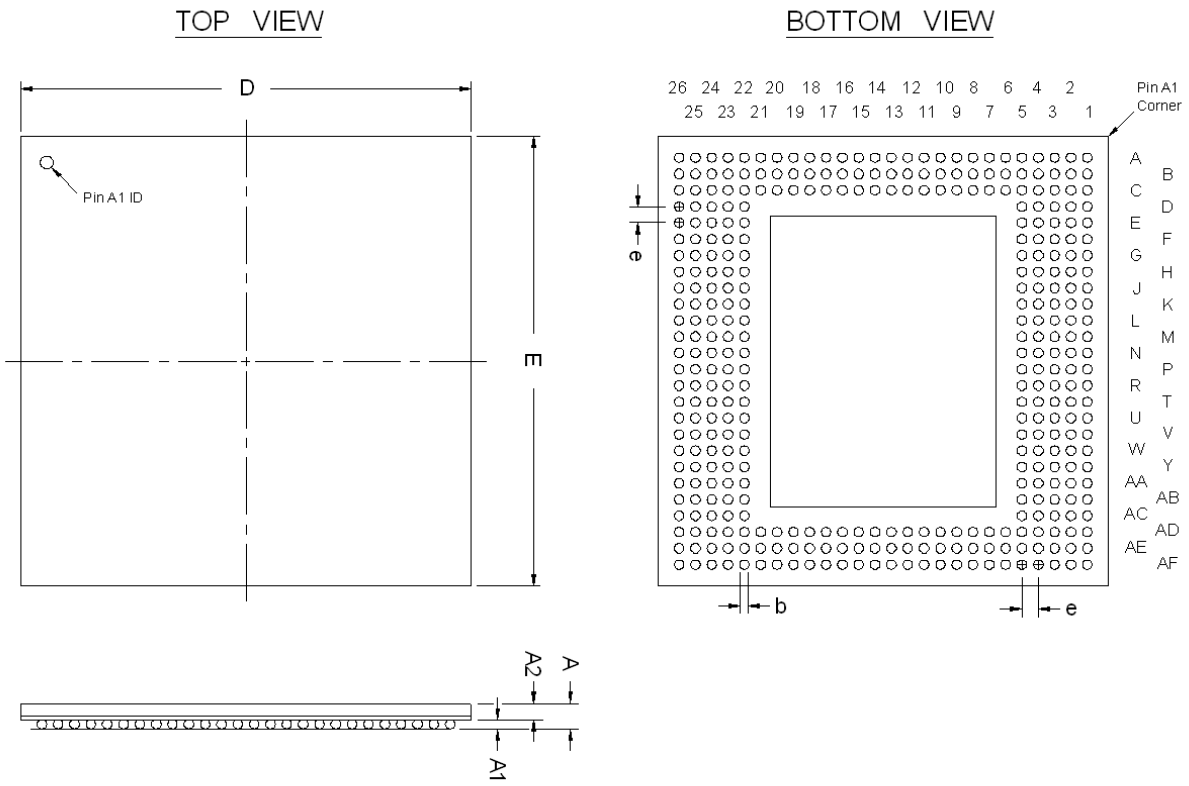

400-Pin FineLine Ball-Grid Array (FBGA)—Wire Bond

- All dimensions and tolerances conform to ASME Y14.5M – 1994.
- Controlling dimension is in millimeters.
- Pin A1 may be indicated by an ID dot, or a special feature, in its proximity on package surface.

Package Information	
Description	**Specification**
Ordering Code Reference	F
Package Acronym	FBGA
Substrate Material	BT
Solder Ball Composition	Regular: 63Sn:37Pb (Typ.) Pb-free: Sn:3Ag:0.5Cu (Typ.)
JEDEC Outline Reference	MS-034 Variation: AAH-1
Lead Coplanarity	0.008 inches (0.20mm)
Weight	2.3 g (Typ.)
Moisture Sensitivity Level	Printed on moisture barrier bag

Package Outline Dimension Table			
Symbol	**Millimeteres**		
	Min.	**Nom.**	**Max.**
A	—	—	2.20
A1	0.30	—	—
A2	—	—	1.80
A3	0.80 REF		
D	21.00 BSC		
E	21.00 BSC		
b	0.50	0.60	0.70
e	1.00 BSC		

Package Outline

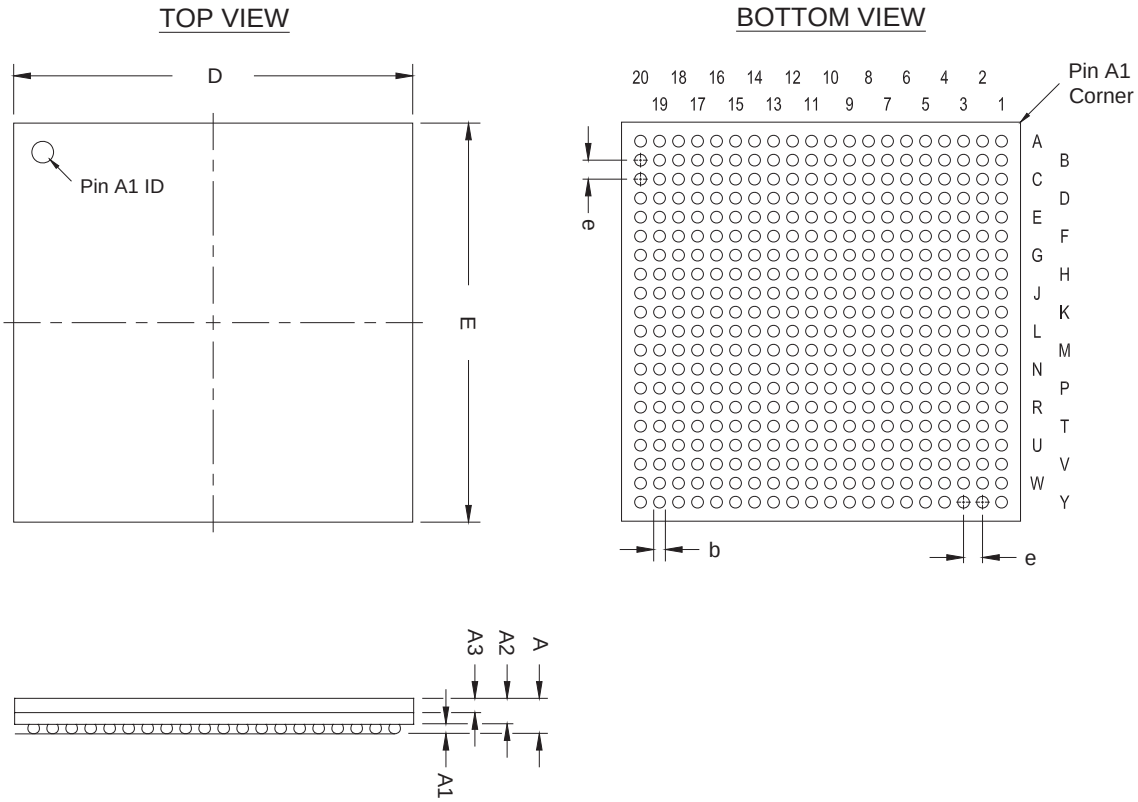

403-Pin Ceramic Pin-Grid Array (PGA)—Wire Bond

- All dimensions and tolerances conform to ASME Y14.5M – 1994.
- Controlling dimension is in inches.
- Pin A1 may be indicated by an ID dot, or a special feature, in its proximity on package surface.

Package Information	
Description	**Specification**
Ordering Code Reference	G
Package Acronym	PGA
Leadframe Material	Alloy 42
Lead Finish	Gold Over Nickel Plate
JEDEC Outline Reference	MO-128 Variation: AL
Lead Coplanarity	N/A
Weight	47.7 g (Typ.)
Moisture Sensitivity Level	Printed on moisture barrier bag

Package Outline Dimension Table			
Symbol	**Inches**		
	Min.	**Nom.**	**Max.**
A	0.157	0.180	0.203
A1	0.050 TYP		
A2	0.117	0.130	0.143
D	1.940	1.960	1.980
E	1.940	1.960	1.980
L	0.130 TYP		
b	0.016	0.018	0.020
e	0.100 BSC		

Package Outline

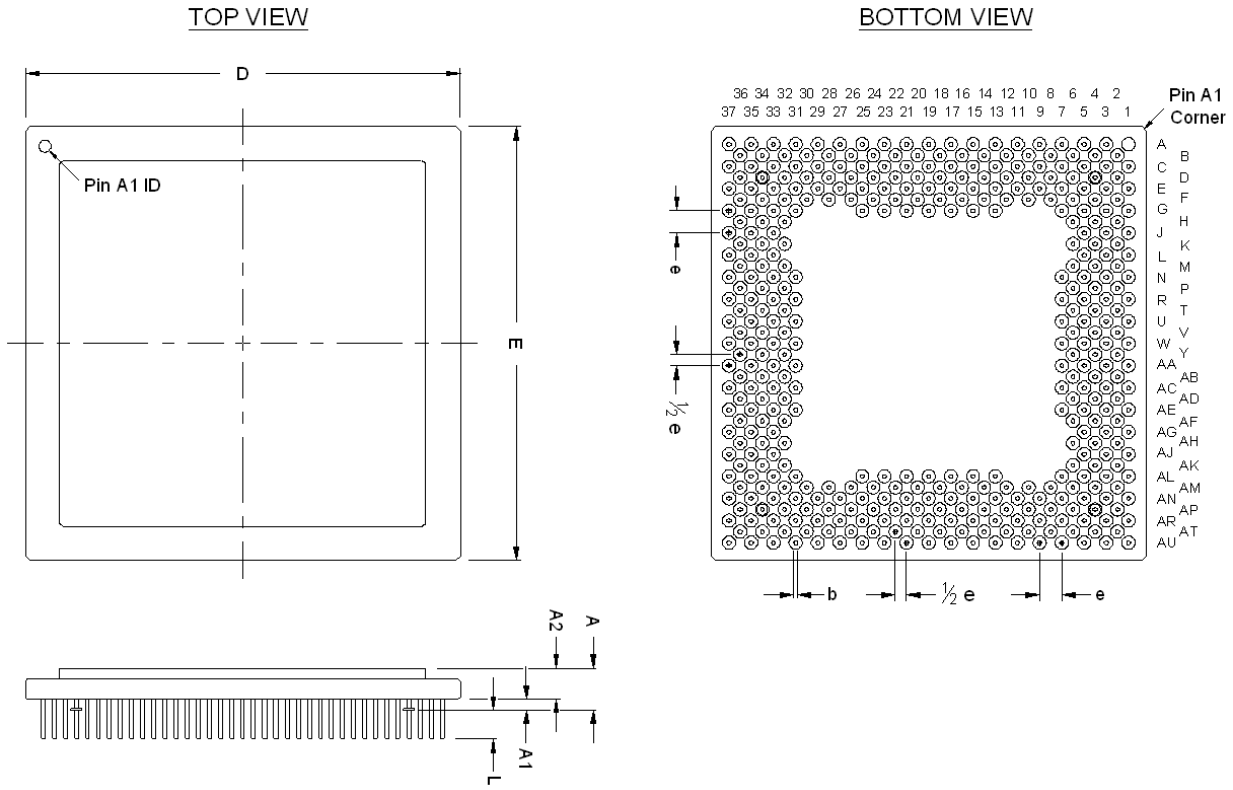

484-Pin FineLine Ball-Grid Array (FBGA), Option 1—Flip Chip

- All dimensions and tolerances conform to ASME Y14.5M – 1994.
- Controlling dimension is in millimeters.
- Pin A1 may be indicated by an ID dot, or a special feature, in its proximity on the package surface.

Package Information	
Description	**Specification**
Ordering Code Reference	F
Package Acronym	FBGA
Substrate Material	BT
Solder Ball Composition	Regular: 63Sn:37Pb (Typ.) Pb-free: Sn:3Ag:0.5Cu (Typ.)
JEDEC Outline Reference	MS-034 Variation: AAJ-1
Lead Coplanarity	0.008 inches (0.20 mm)
Weight	6.8 g (Typ.)
Moisture Sensitivity Level	Printed on moisture barrier bag

Package Outline Dimension Table			
Symbol	**Millimeters**		
	Min.	**Nom.**	**Max.**
A	—	—	3.50
A1	0.30	—	—
A2	0.25	—	3.00
A3	—	—	2.50
D	23.00 BSC		
E	23.00 BSC		
b	0.50	0.60	0.70
e	1.00 BSC		

Package Outline

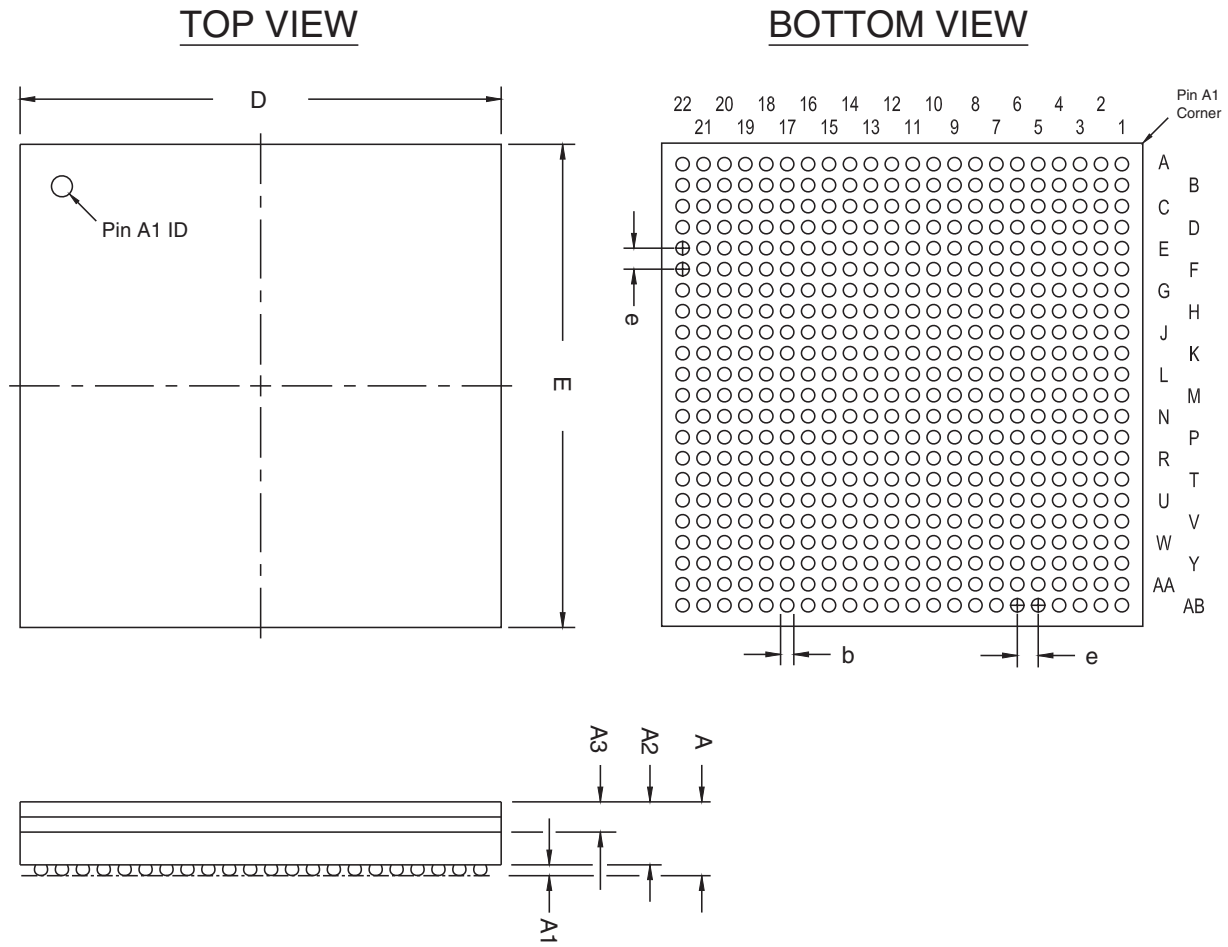

484-Pin FineLine Ball-Grid Array (FBGA), Option 1—Flip Chip—Channel Lid

- All dimensions and tolerances conform to ASME Y14.5M – 1994.
- Controlling dimension is in millimeters.
- Pin A1 may be indicated by an ID dot, or a special feature, in its proximity on the package surface.

Package Information	
Description	**Specification**
Ordering Code Reference	F
Package Acronym	FBGA
Substrate Material	BT
Solder Ball Composition	Regular: 63Sn:37Pb (Typ.) Pb-free: Sn:3Ag:0.5Cu (Typ.)
JEDEC Outline Reference	MO-034 Variation: AAJ-1
Lead Coplanarity	0.008 inches (0.20 mm)
Weight	6.8 g (Typ.)
Moisture Sensitivity Level	Printed on moisture barrier bag

Package Outline Dimension Table			
Symbol	**Millimeters**		
	Min.	**Nom.**	**Max.**
A	2.95	3.15	3.35
A1	0.40	0.50	0.60
A2	2.35	2.65	2.95
A3	1.35	1.45	1.55
D	23.00 BSC		
E	23.00 BSC		
b	0.50	0.60	0.70
e	1.00 BSC		

Package Outline

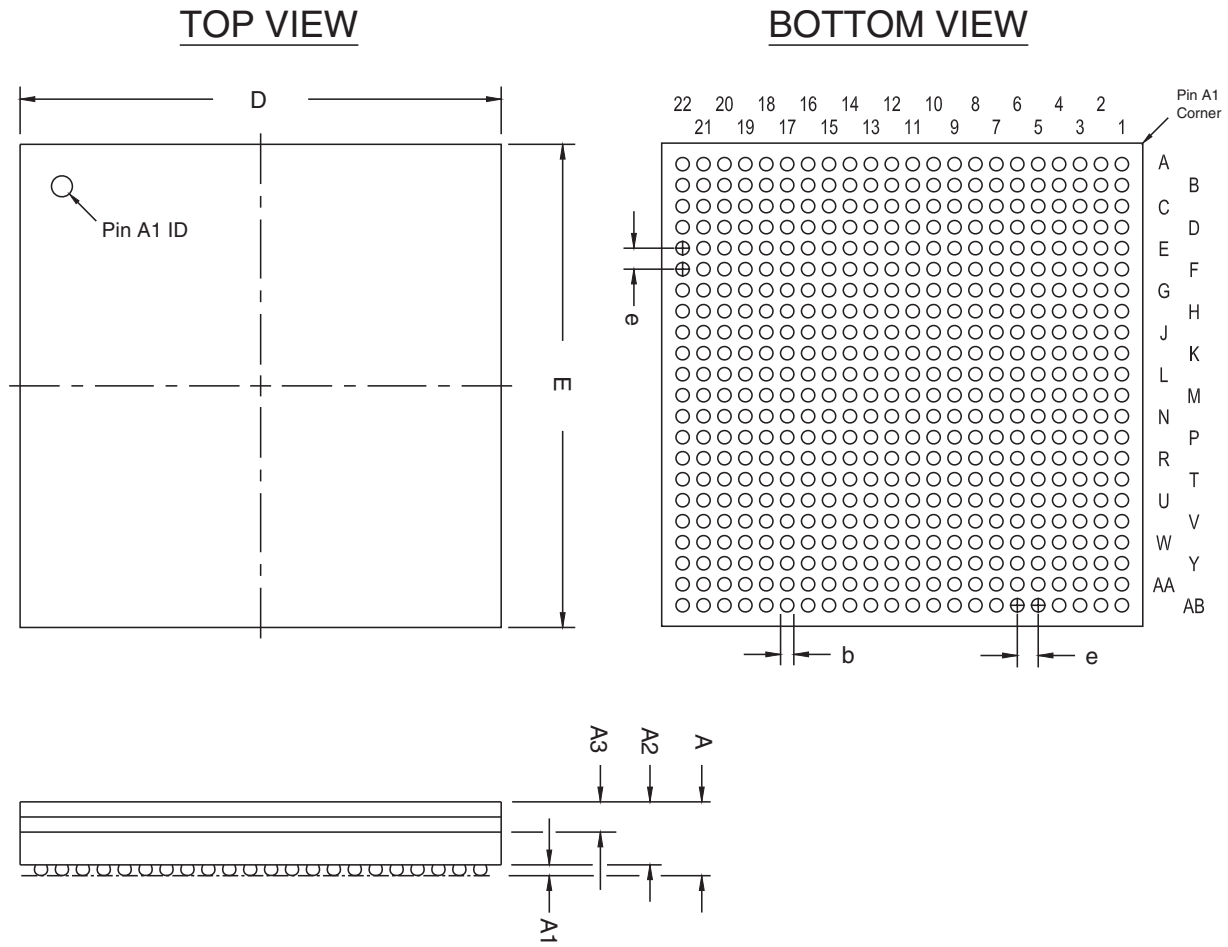

484-Pin FineLine Ball-Grid Array (FBGA), Option 2—Wire Bond

- All dimensions and tolerances conform to ASME Y14.5M – 1994.
- Controlling dimension is in millimeters.
- Pin A1 may be indicated by an ID dot, or a special feature, in its proximity on package surface.

Package Information	
Description	**Specification**
Ordering Code Reference	F
Package Acronym	FBGA
Substrate Material	BT
Solder Ball Composition	Regular: 63Sn:37Pb (Typ.) Pb-free: Sn:3Ag:0.5Cu (Typ.)
JEDEC Outline Reference	MS-034 Variation: AAJ-1
Lead Coplanarity	0.008 inches (0.20 mm)
Weight	2.6 g (Typ.)
Moisture Sensitivity Level	Printed on moisture barrier bag

Package Outline Dimension Table			
Symbol	**Millimeters**		
	Min.	**Nom.**	**Max.**
A	—	—	2.60
A1	0.30	—	—
A2	—	—	2.20
A3	—	—	1.80
D	23.00 BSC		
E	23.00 BSC		
b	0.50	0.60	0.70
e	1.00 BSC		

Package Outline

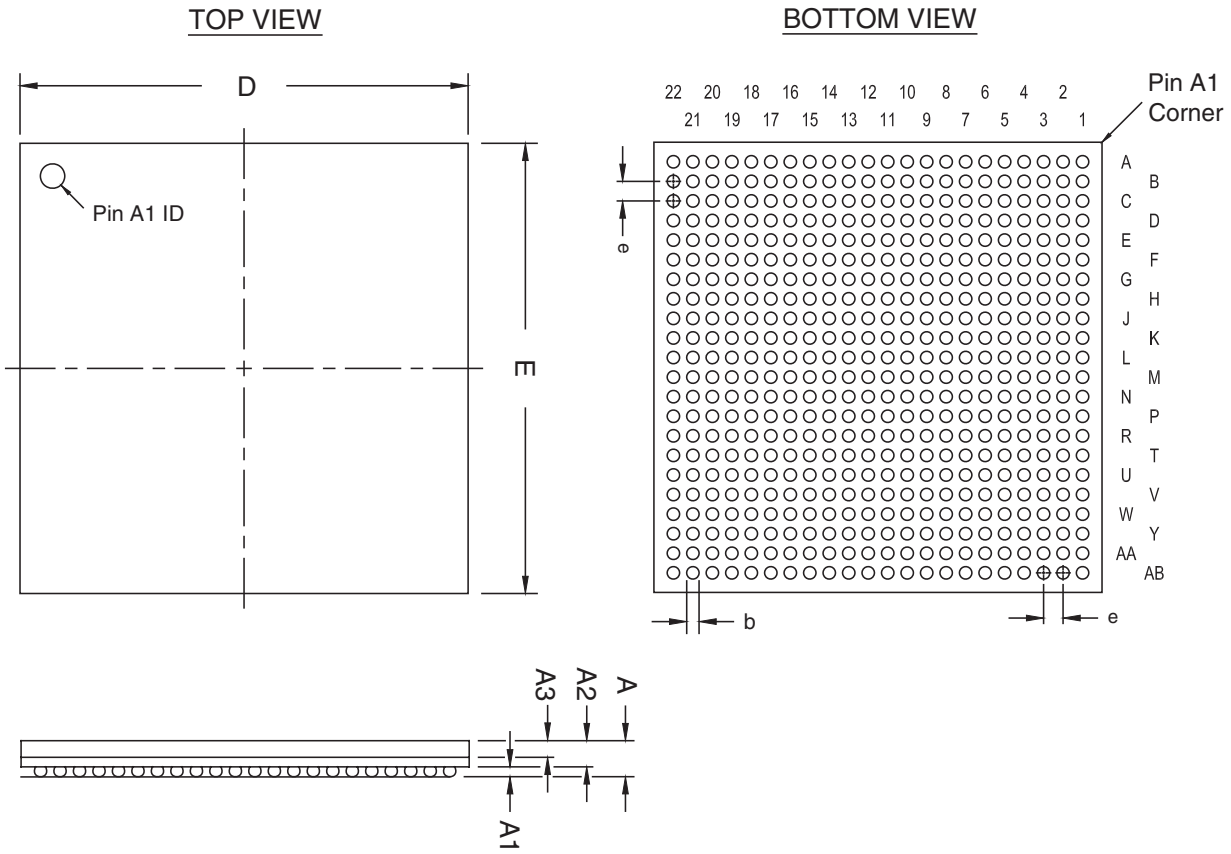

484-Pin FineLine Ball-Grid Array (FBGA), Option 4—Flip Chip

- All dimensions and tolerances conform to ASME Y14.5M – 1994.
- Controlling dimension is in millimeters.
- Pin A1 may be indicated by an ID dot, or a special feature, in its proximity on package surface.

Package Information	
Description	**Specification**
Ordering Code Reference	F
Package Acronym	FBGA
Substrate Material	BT
Solder Ball Composition	Regular: 63Sn:37Pb (Typ.) Pb-free: Sn:3Ag:0.5Cu (Typ.)
JEDEC Outline Reference	MS-034 Variation: AAJ-1
Lead Coplanarity	0.008 inches (0.20 mm)
Weight	5.3 g (Typ.)
Moisture Sensitivity Level	Printed on moisture barrier bag

Package Outline Dimension Table			
Symbol	**Millimeters**		
	Min.	**Nom.**	**Max.**
A	—	—	3.50
A1	0.30	—	—
A2	0.25	—	3.00
A3	—	—	2.50
D	23.00 BSC		
D1	17.00 BSC		
E	23.00 BSC		
E1	17.00 BSC		
b	0.50	0.60	0.70
e	1.00 BSC		

Package Outline

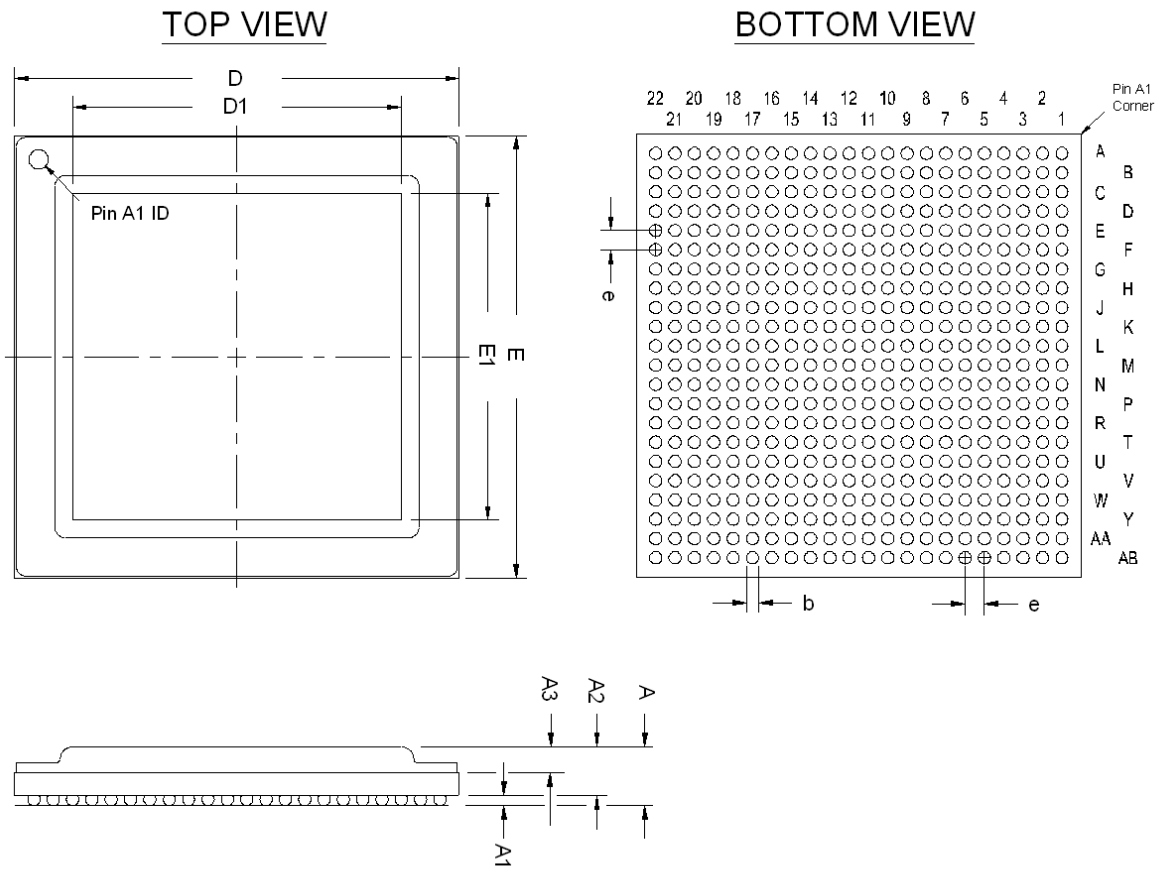

484-Pin FineLine Ball-Grid Array (FBGA)—Wire Bond—A:2.40

- All dimensions and tolerances conform to ASME Y14.5M – 1994.
- Controlling dimension is in millimeters.
- Pin A1 may be indicated by an ID dot, or a special feature, in its proximity on package surface.

Package Information	
Description	**Specification**
Ordering Code Reference	F
Package Acronym	FBGA
Substrate Material	BT
Solder Ball Composition	Regular: 63Sn:37Pb (Typ.) Pb-free: Sn:3Ag:0.5Cu (Typ.)
JEDEC Outline Reference	MS-034 Variation: AAJ-1
Lead Coplanarity	0.008 inches (0.20 mm)
Weight	2.3 g (Typ.)
Moisture Sensitivity Level	Printed on moisture barrier bag

Package Outline Dimension Table			
Symbol	**Millimeters**		
	Min.	**Nom.**	**Max.**
A	2.10	2.25	2.40
A1	0.40	0.50	0.60
A2	1.50	1.75	2.00
A3	1.12	1.17	1.22
D	23.00 BSC		
E	23.00 BSC		
b	0.50	0.60	0.70
e	1.00 BSC		

Package Outline

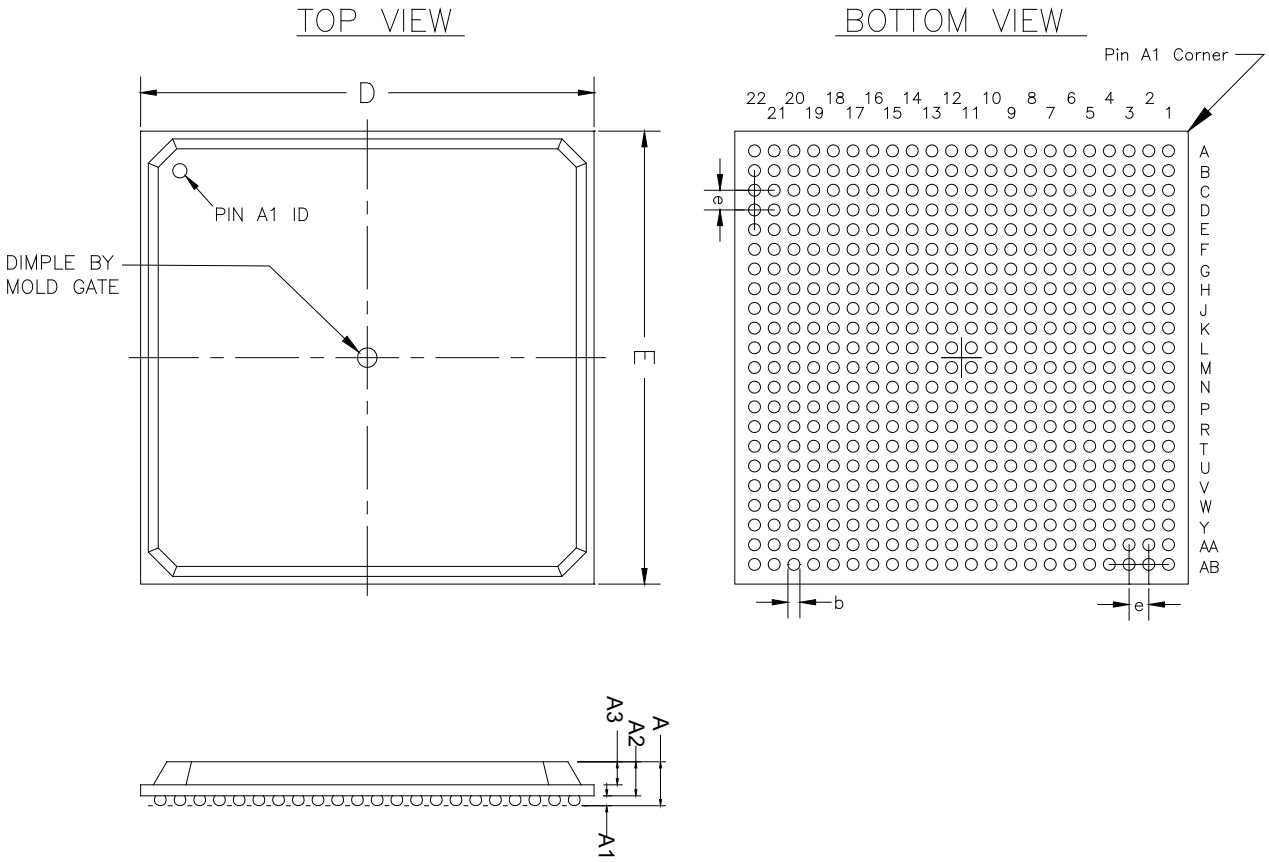

484-Pin Hybrid FineLine Ball-Grid Array (HBGA)—Flip Chip

- All dimensions and tolerances conform to ASME Y14.5M - 1994.
- Controlling dimension is in millimeters.
- Pin A1 may be indicated by an ID dot, or a special feature, in its proximity on package surface.

Package Information	
Description	**Specification**
Ordering Code Reference	H
Package Acronym	HBGA
Substrate Material	BT
Solder Ball Composition	Regular: 63Sn:37Pb (Typ.) Pb-free: Sn:3Ag:0.5Cu (Typ.)
JEDEC Outline Reference	MS-034 Variation: AAL-1
Lead Coplanarity	0.008 inches (0.20mm)
Weight	11.3 g (Typ.)
Moisture Sensitivity Level	Printed on moisture barrier bag

Package Outline Dimension Table			
Symbol	**Millimeters**		
	Min.	**Nom.**	**Max.**
A	—	—	3.50
A1	0.30	—	—
A2	0.25	—	3.00
A3	—	—	2.50
D	27.00 BSC		
E	27.00 BSC		
b	0.50	0.60	0.70
e	1.00 BSC		

Package Outline

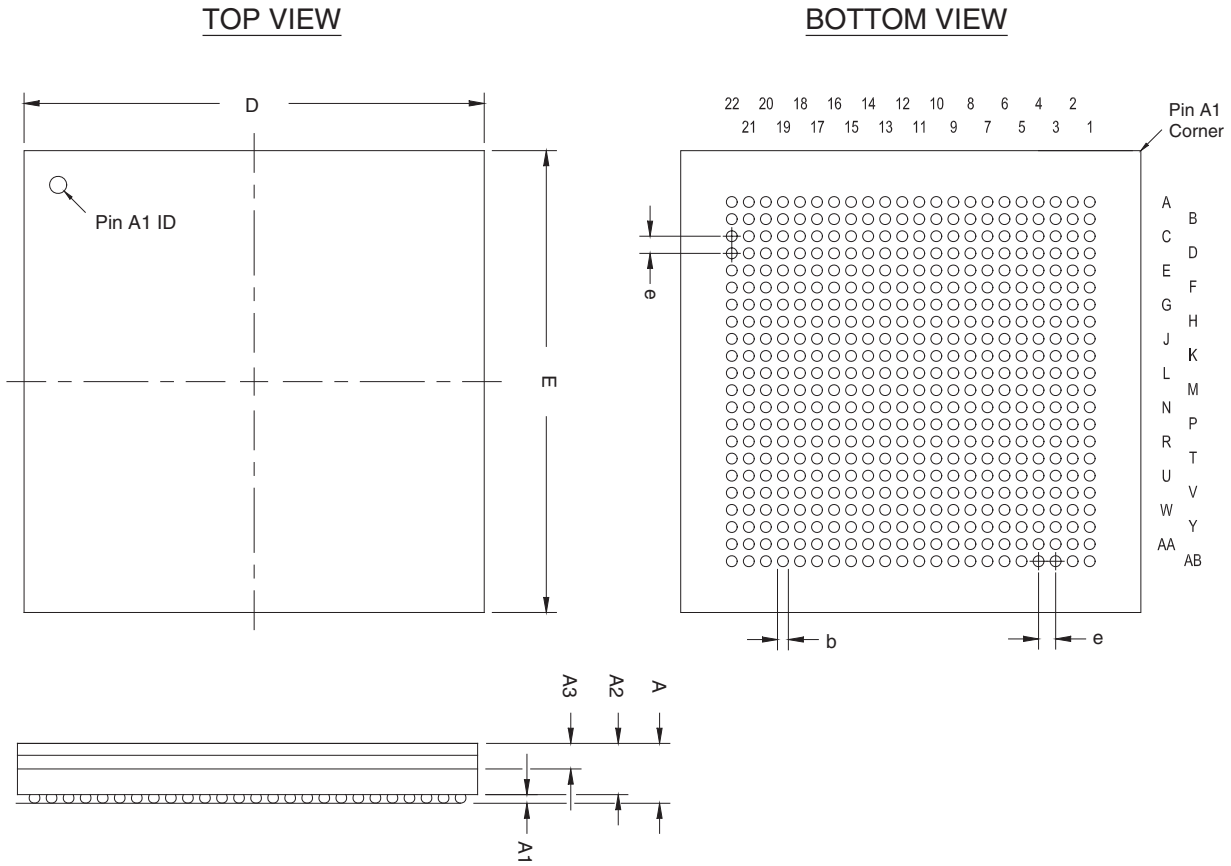

484-Pin Ultra FineLine Ball-Grid Array (UBGA)—Wire Bond

- All dimensions and tolerances conform to ASME Y14.5M - 1994.
- Controlling dimension is in millimeters.
- Pin A1 may be indicated by an ID dot, or a special feature, in its proximity on package surface.

Package Information	
Description	**Specification**
Ordering Code Reference	U
Package Acronym	UBGA
Substrate Material	BT
Solder Ball Composition	Regular: 63Sn:37Pb (Typ.) Pb-free: Sn:3Ag:0.5Cu (Typ.)
JEDEC Outline Reference	MO-216 Variation: BAP-2
Lead Coplanarity	0.005 inches (0.12mm)
Weight	1.6 g (Typ.)
Moisture Sensitivity Level	Printed on moisture barrier bag

Package Outline Dimension Table			
Symbol	**Millimeters**		
	Min.	**Nom.**	**Max.**
A	—	—	2.20
A1	0.20	—	—
A2	0.65	—	—
A3	0.95 TYP		
D	19.00 BSC		
E	19.00 BSC		
b	0.40	0.50	0.60
e	0.80 BSC		

Package Outline

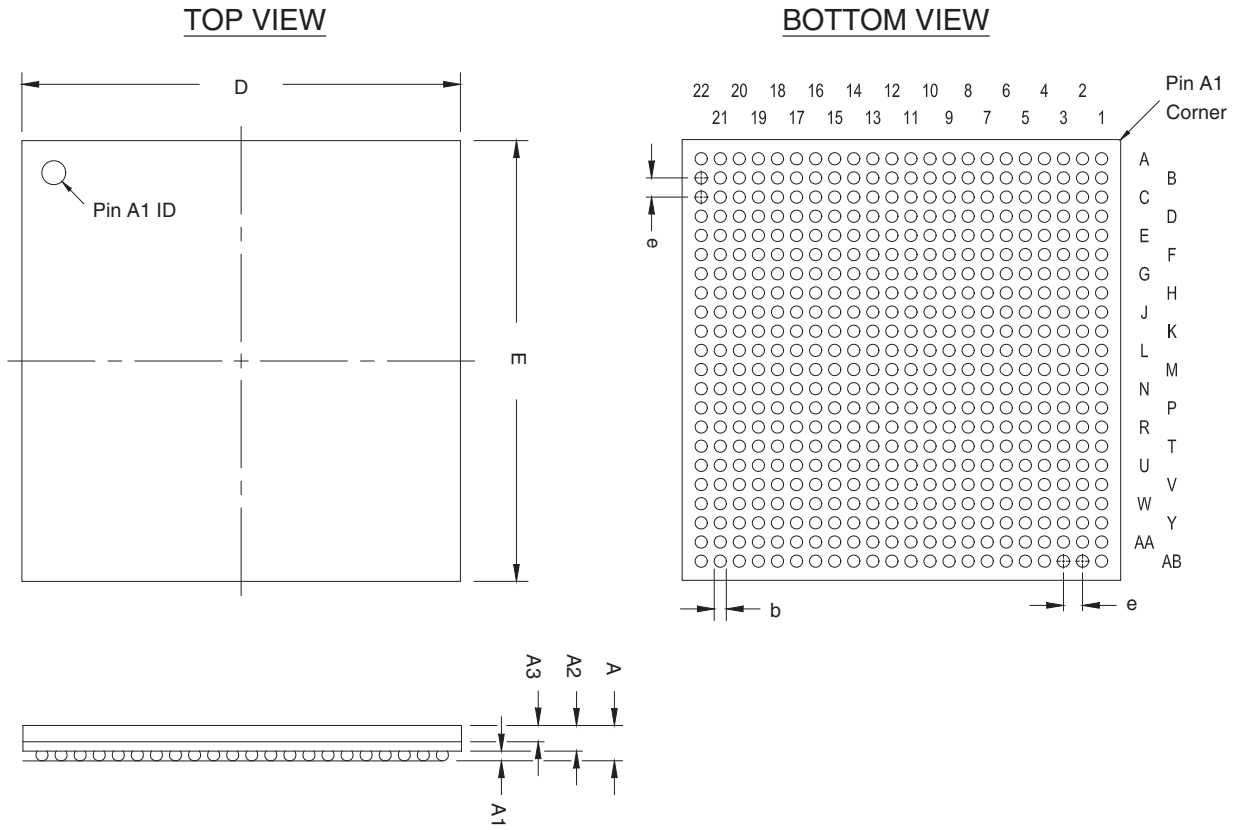

503-Pin Ceramic Pin-Grid Array (PGA)—Wire Bond

- All dimensions and tolerances conform to ASME Y14.5M - 1994.
- Controlling dimension is in inches.
- Pin A1 may be indicated by an ID dot, or a special feature, in its proximity on package surface.

Package Information	
Description	**Specification**
Ordering Code Reference	G
Package Acronym	PGA
Leadframe Material	Alloy 42
Lead Finish	Gold Over Nickel Plate
JEDEC Outline Reference	MO-128 Variation: AN
Lead Coplanarity	N/A
Weight	59.0 g (Typ.)
Moisture Sensitivity Level	Printed on moisture barrier bag

Package Outline Dimension Table			
Symbol	**Inches**		
	Min.	**Nom.**	**Max.**
A	—	—	0.205
A1	0.050 TYP		
A2	—	—	0.145
D	2.245	2.260	2.275
E	2.245	2.260	2.275
L	0.130 TYP		
b	0.016	0.018	0.020
e	0.100 BSC		

Package Outline

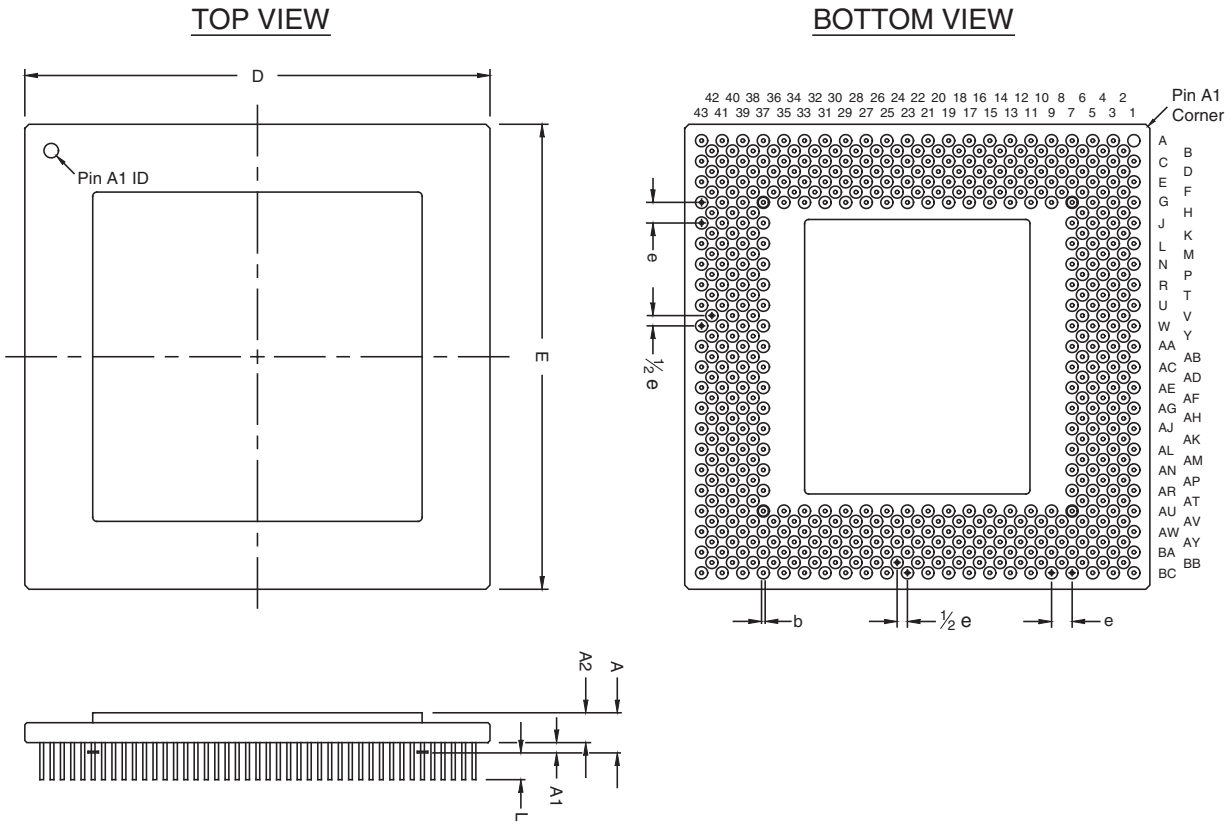

599-Pin Ceramic Pin-Grid Array (PGA)—Wire Bond

- All dimensions and tolerances conform to ASME Y14.5M – 1994.
- Controlling dimension is in inches.
- Pin A1 may be indicated by an ID dot, or a special feature, in its proximity on package surface.

Package Information	
Description	**Specification**
Ordering Code Reference	G
Package Acronym	PGA
Leadframe Material	Alloy 42
Lead Finish	Gold over Nickel Plate
JEDEC Outline Reference	MO-128 Variation: AP
Lead Coplanarity	N/A
Weight	69.0 g (Typ.)
Moisture Sensitivity Level	Printed on moisture barrier bag

Package Outline Dimension Table			
Symbol	**Inches**		
	Min.	**Nom.**	**Max.**
A	—	—	0.205
A1	0.050 TYP		
A2	—	—	0.145
D	2.445	2.460	2.475
E	2.445	2.460	2.475
L	0.130 TYP		
b	0.016	0.018	0.020
e	0.100 BSC		

Package Outline

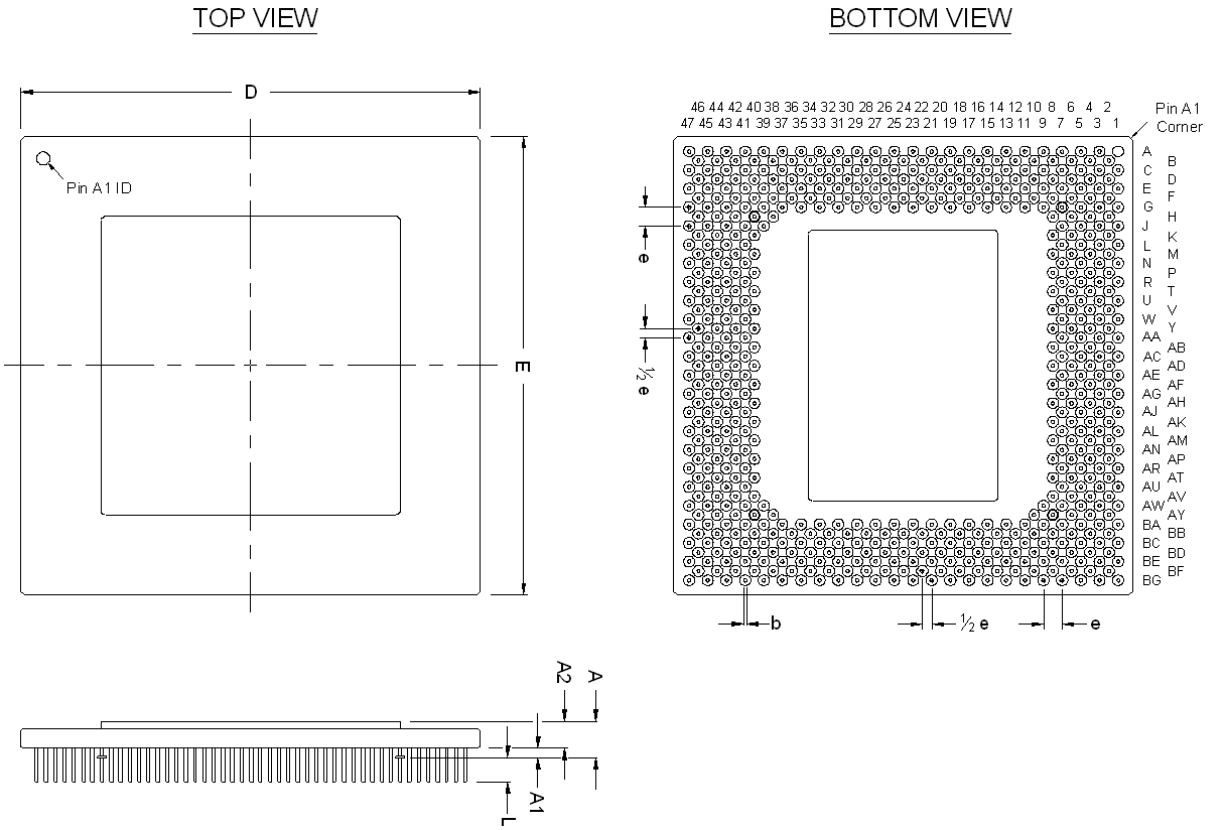

600-Pin Ball-Grid Array (BGA)—Wire Bond

- All dimensions and tolerances conform to ASME Y14.5M - 1994.
- Controlling dimension is in millimeters.
- Pin A1 may be indicated by an ID dot, or a special feature, in its proximity on package surface.

Package Information	
Description	**Specification**
Ordering Code Reference	B
Package Acronym	BGA
Substrate Material	BT or tape
Solder Ball Composition	Regular: 63Sn:37Pb (Typ.) Pb-free: Sn:3Ag:0.5Cu (Typ.)
JEDEC Outline Reference	MO-192 Variation: BAW-1
Lead Coplanarity	0.008 inches (0.20mm)
Weight	12.0 g (Typ.)
Moisture Sensitivity Level	Printed on moisture barrier bag

Package Outline Dimension Table			
Symbol	**Millimeters**		
	Min.	**Nom.**	**Max.**
A	—	—	2.00
A1	0.35	—	—
A2	0.25	—	1.10
D	45.00 BSC		
E	45.00 BSC		
b	0.60	0.75	0.90
e	1.27 BSC		

Package Outline

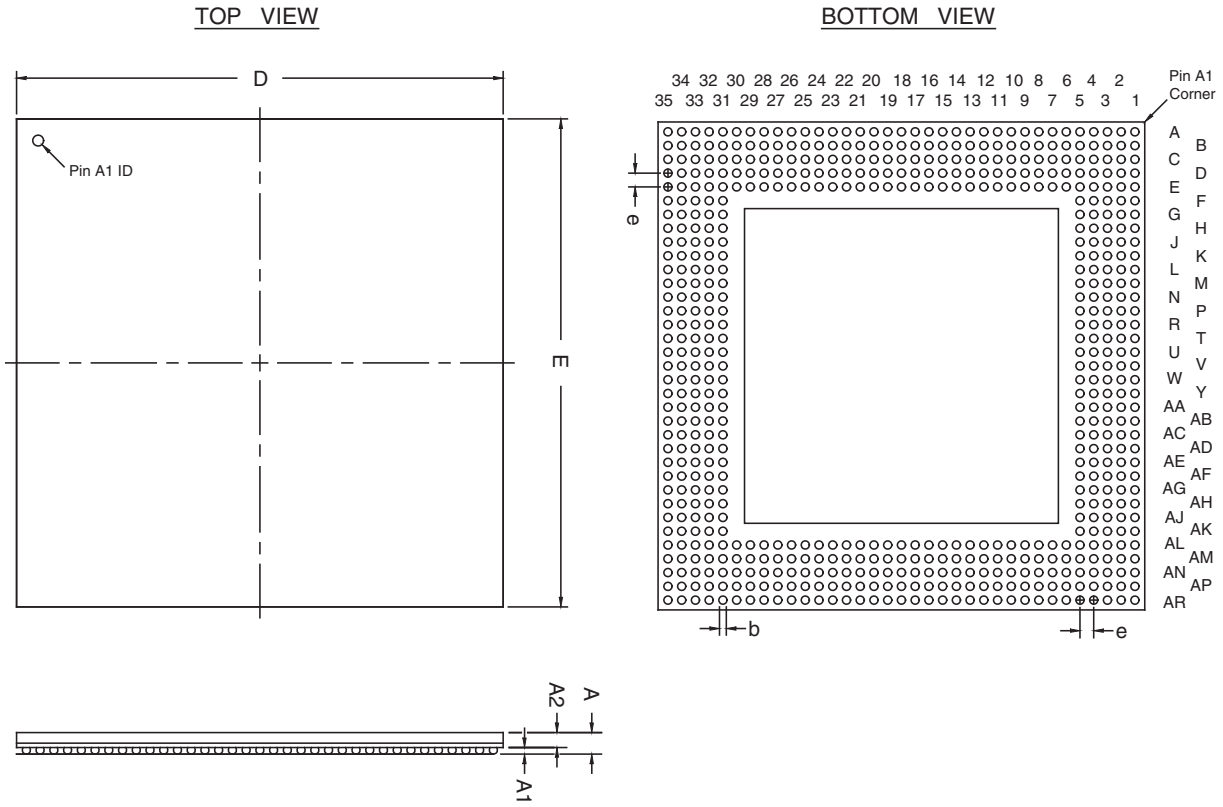

652-Pin Ball-Grid Array (BGA), Option 1—Flip Chip

- All dimensions and tolerances conform to ASME Y14.5M - 1994.
- Controlling dimension is in millimeters.
- Pin A1 may be indicated by an ID dot, or a special feature, in its proximity on package surface.

Package Information	
Description	**Specification**
Ordering Code Reference	B
Package Acronym	BGA
Substrate Material	BT
Solder Ball Composition	Regular: 63Sn:37Pb (Typ.) Pb-free: Sn:3Ag:0.5Cu (Typ.)
JEDEC Outline Reference	MS-034 Variation: BAW-1
Lead Coplanarity	0.008 inches (0.20 mm)
Weight	23.8 g (Typ.)
Moisture Sensitivity Level	Printed on moisture barrier bag

Package Outline Dimension Table			
Symbol	**Millimeters**		
	Min.	**Nom.**	**Max.**
A	—	—	3.50
A1	0.30	—	—
A2	0.25	—	3.00
A3	—	—	2.50
D	45.00 BSC		
E	45.00 BSC		
b	0.60	0.75	0.90
e	1.27 BSC		

Package Outline

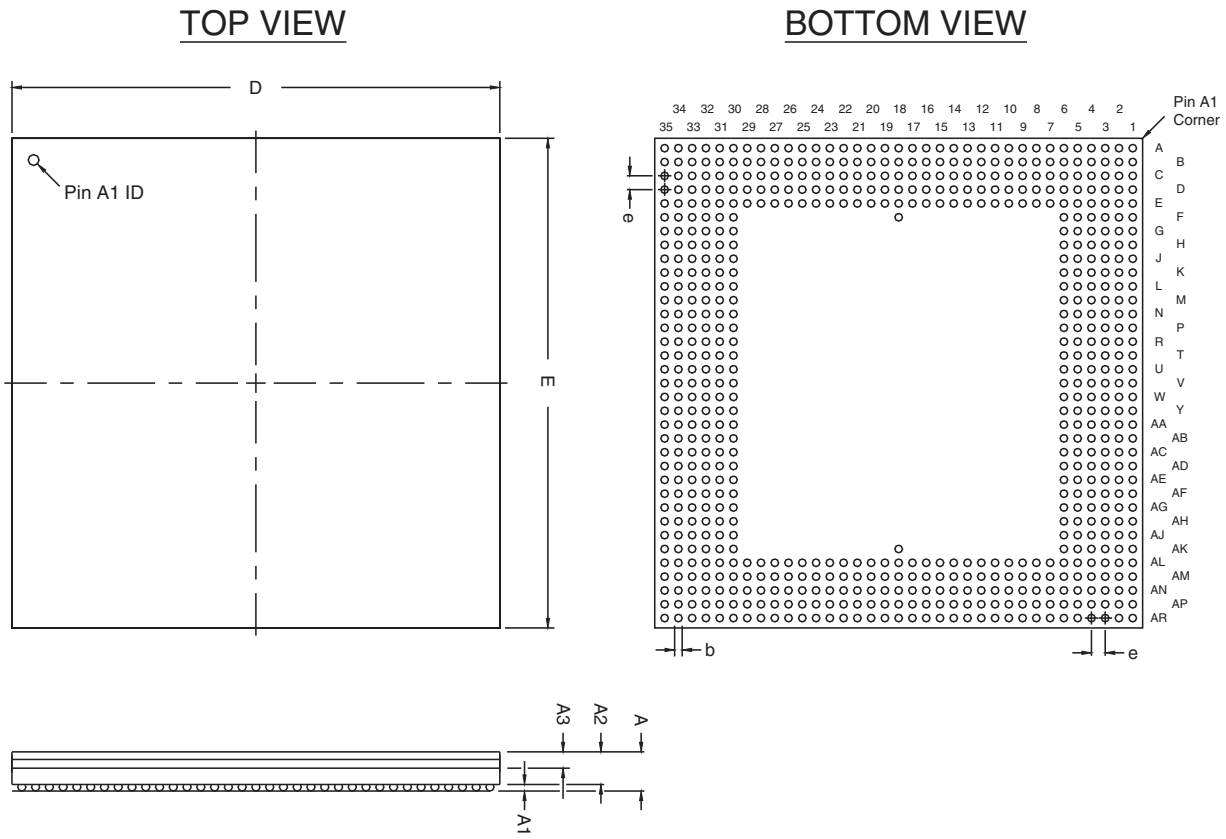

652-Pin Plastic Ball-Grid Array (BGA), Option 2—Wire Bond

- All dimensions and tolerances conform to ASME Y14.5M - 1994.
- Controlling dimension is in millimeters.
- Pin A1 may be indicated by an ID dot, or a special feature, in its proximity on package surface.

Package Information	
Description	**Specification**
Ordering Code Reference	B
Package Acronym	BGA
Substrate Material	BT
Solder Ball Composition	Regular: 63Sn:37Pb (Typ.) Pb-free: Sn:3Ag:0.5Cu (Typ.)
JEDEC Outline Reference	MS-034 Variation: BAW-1
Lead Coplanarity	0.008 inches (0.20 mm)
Weight	15.9 g (Typ.)
Moisture Sensitivity Level	Printed on moisture barrier bag

Package Outline Dimension Table			
Symbol	**Millimeters**		
	Min.	**Nom.**	**Max.**
A	—	—	3.20
A1	0.35	—	—
A2	—	—	2.80
A3	—	—	2.40
D	45.00 BSC		
E	45.00 BSC		
b	0.60	0.75	0.90
e	1.27 BSC		

Package Outline

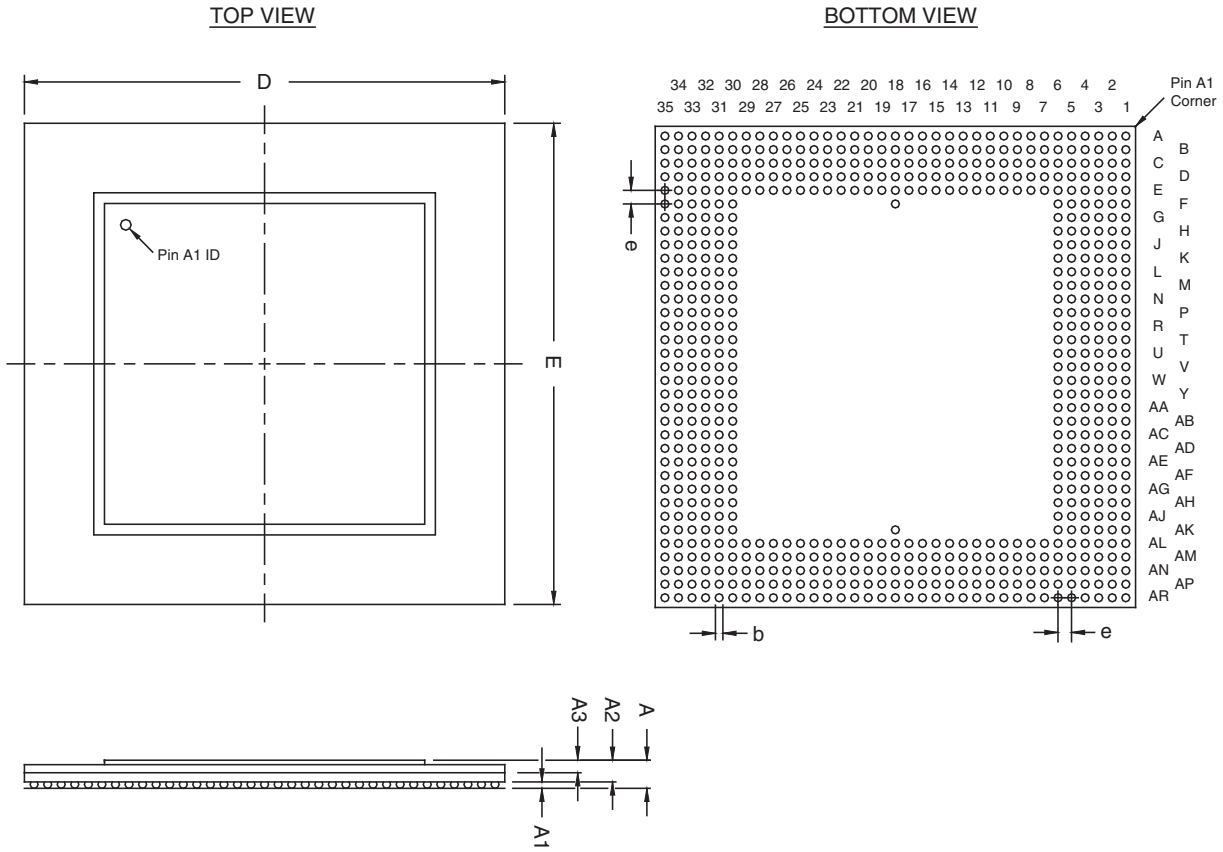

652-Pin Plastic Ball-Grid Array (BGA), Option 3—Wire Bond

- All dimensions and tolerances conform to ASME Y14.5M - 1994.
- Controlling dimension is in millimeters.
- Pin A1 may be indicated by an ID dot, or a special feature, in its proximity on package surface.

Package Information	
Description	**Specification**
Ordering Code Reference	B
Package Acronym	BGA
Substrate Material	BT or tape
Solder Ball Composition	Regular: 63Sn:37Pb (Typ.) Pb-free: Sn:3Ag:0.5Cu (Typ.)
JEDEC Outline Reference	MO-192 Variation: BAW-1
Lead Coplanarity	0.008 inches (0.20 mm)
Weight	15.1 g (Typ.)
Moisture Sensitivity Level	Printed on moisture barrier bag

Package Outline Dimension Table			
Symbol	**Millimeters**		
	Min.	**Nom.**	**Max.**
A	—	—	2.00
A1	0.35	—	—
A2	0.25	—	1.10
D	45.00 BSC		
E	45.00 BSC		
b	0.60	0.75	0.90
e	1.27 BSC		

Package Outline

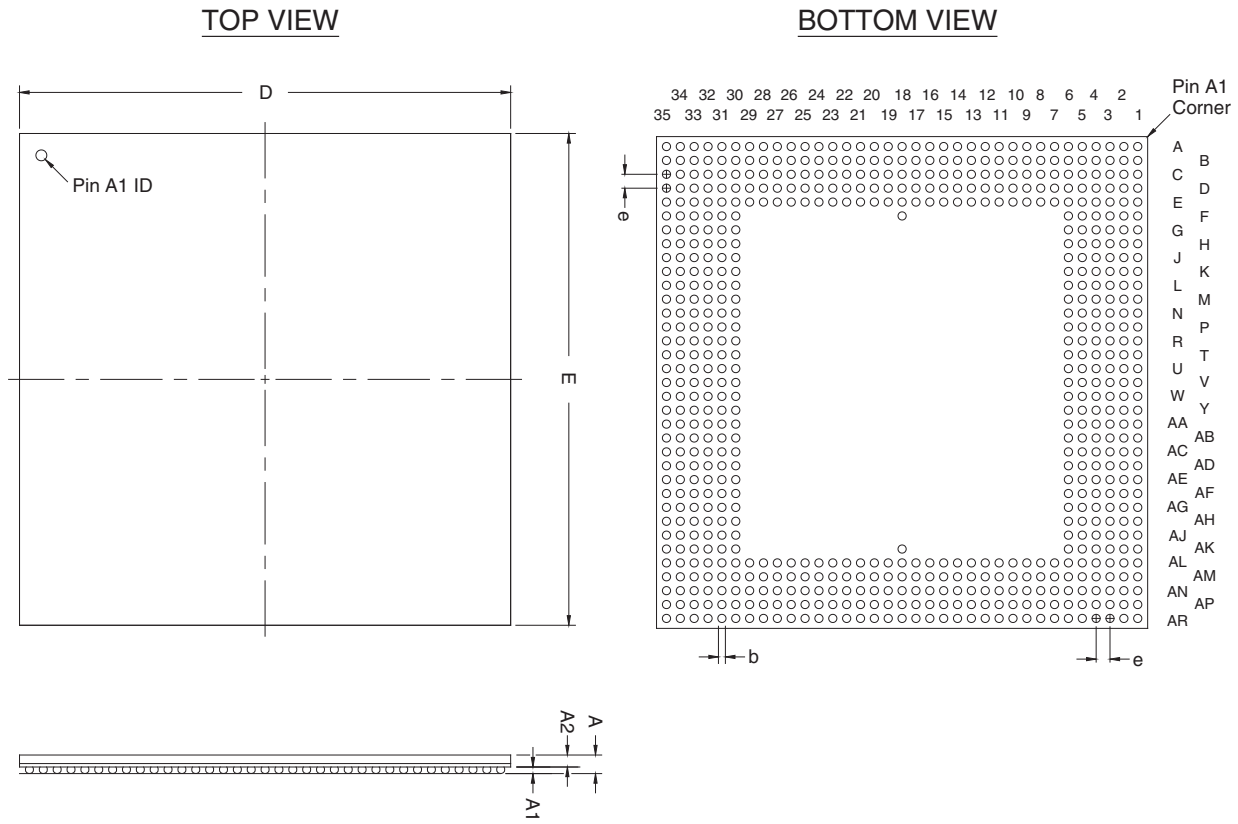

655-Pin Ceramic Pin-Grid Array (PGA)—Wire Bond

- All dimensions and tolerances conform to ASME Y14.5M – 1994.
- Controlling dimension is in inches.
- Pin A1 may be indicated by an ID dot, or a special feature, in its proximity on package surface.

Package Information	
Description	**Specification**
Ordering Code Reference	G
Package Acronym	PGA
Leadframe Material	Alloy 42
Lead Finish	Gold over Nickel Plate
JEDEC Outline Reference	MO-128 Variation: AP
Lead Coplanarity	N/A
Weight	74.9 g (Typ.)
Moisture Sensitivity Level	Printed on moisture barrier bag

Package Outline Dimension Table			
Symbol	**Inches**		
	Min.	**Nom.**	**Max.**
A	—	—	0.205
A1	0.050 TYP		
A2	—	—	0.145
D	2.445	2.460	2.475
E	2.445	2.460	2.475
L	0.130 TYP		
b	0.016	0.018	0.020
e	0.100 BSC		

Package Outline

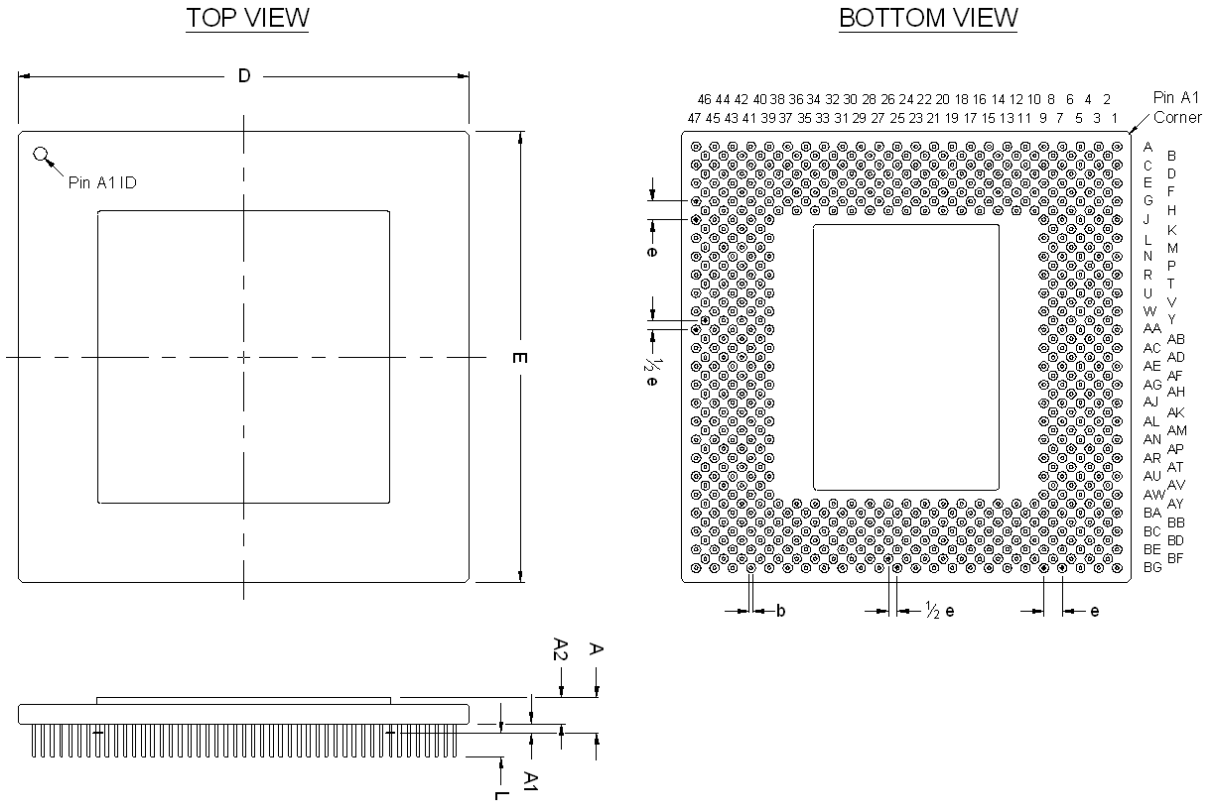

672-Pin Plastic Ball-Grid Array (BGA)—Wire Bond

- All dimensions and tolerances conform to ASME Y14.5M - 1994.
- Controlling dimension is in millimeters.
- Pin A1 may be indicated by an ID dot, or a special feature, in its proximity on package surface.

Package Information	
Description	**Specification**
Ordering Code Reference	B
Package Acronym	BGA
Substrate Material	BT
Solder Ball Composition	Regular: 63Sn:37Pb (Typ.) Pb-free: Sn:3Ag:0.5Cu (Typ.)
JEDEC Outline Reference	MS-034 Variation: BAR-2
Lead Coplanarity	0.008 inches (0.20 mm)
Weight	5.8 g (Typ.)
Moisture Sensitivity Level	Printed on moisture barrier bag

Package Outline Dimension Table			
Symbol	**Millimeters**		
	Min.	**Nom.**	**Max.**
A	—	—	2.60
A1	0.35	—	—
A2	—	—	2.20
A3	—	—	1.80
D	35.00 BSC		
E	35.00 BSC		
b	0.60	0.75	0.90
e	1.27 BSC		

Package Outline

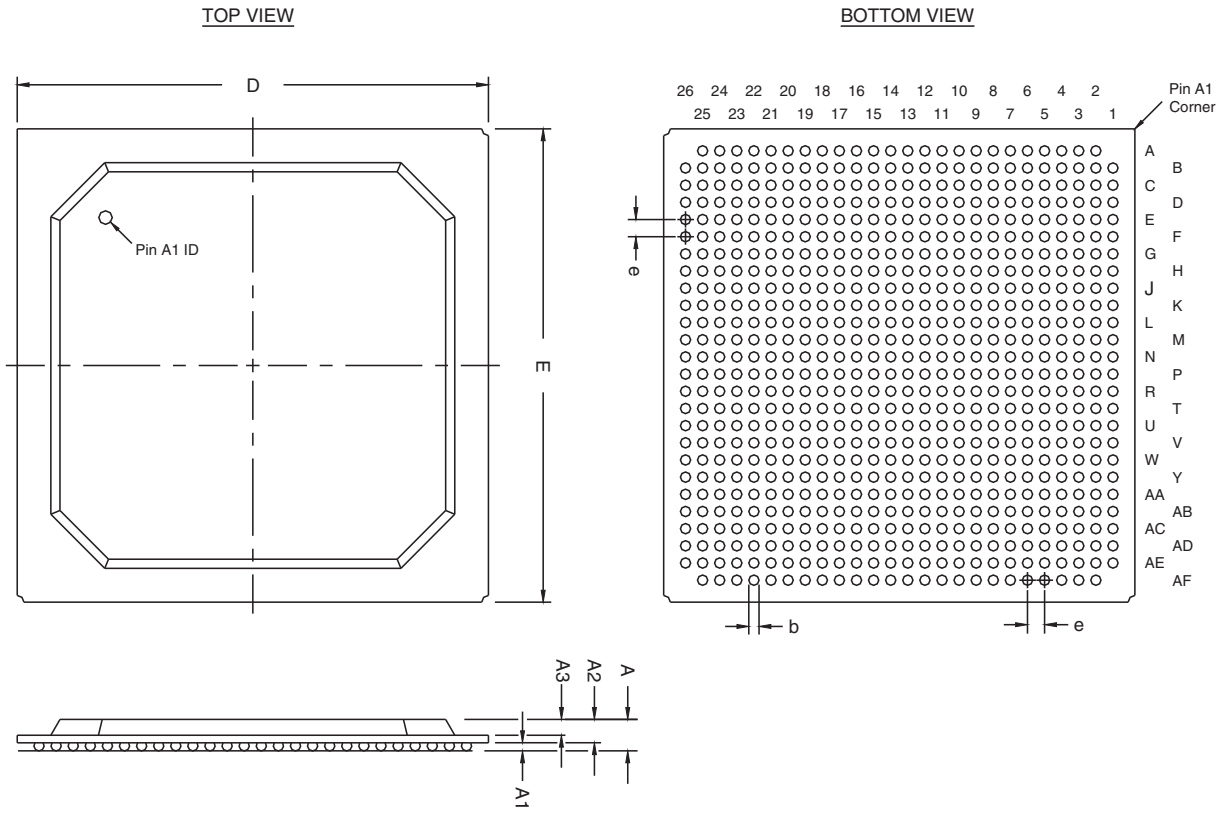

672-Pin FineLine Ball-Grid Array (FBGA), Option 1—Flip Chip

- All dimensions and tolerances conform to ASME Y14.5M - 1994.
- Controlling dimension is in millimeters.
- Pin A1 may be indicated by an ID dot, or a special feature, in its proximity on package surface.

Package Information	
Description	**Specification**
Ordering Code Reference	F
Package Acronym	FBGA
Substrate Material	BT
Solder Ball Composition	Regular: 63Sn:37Pb (Typ.) Pb-free: Sn:3Ag:0.5Cu (Typ.)
JEDEC Outline Reference	MS-034 Variation: AAL-1
Lead Coplanarity	0.008 inches (0.20 mm)
Weight	9.5 g (Typ.)
Moisture Sensitivity Level	Printed on moisture barrier bag

Package Outline Dimension Table			
Symbol	**Millimeters**		
	Min.	**Nom.**	**Max.**
A	—	—	3.50
A1	0.30	—	—
A2	0.25	—	3.00
A3	—	—	2.50
D	27.00 BSC		
E	27.00 BSC		
b	0.50	0.60	0.70
e	1.00 BSC		

Package Outline

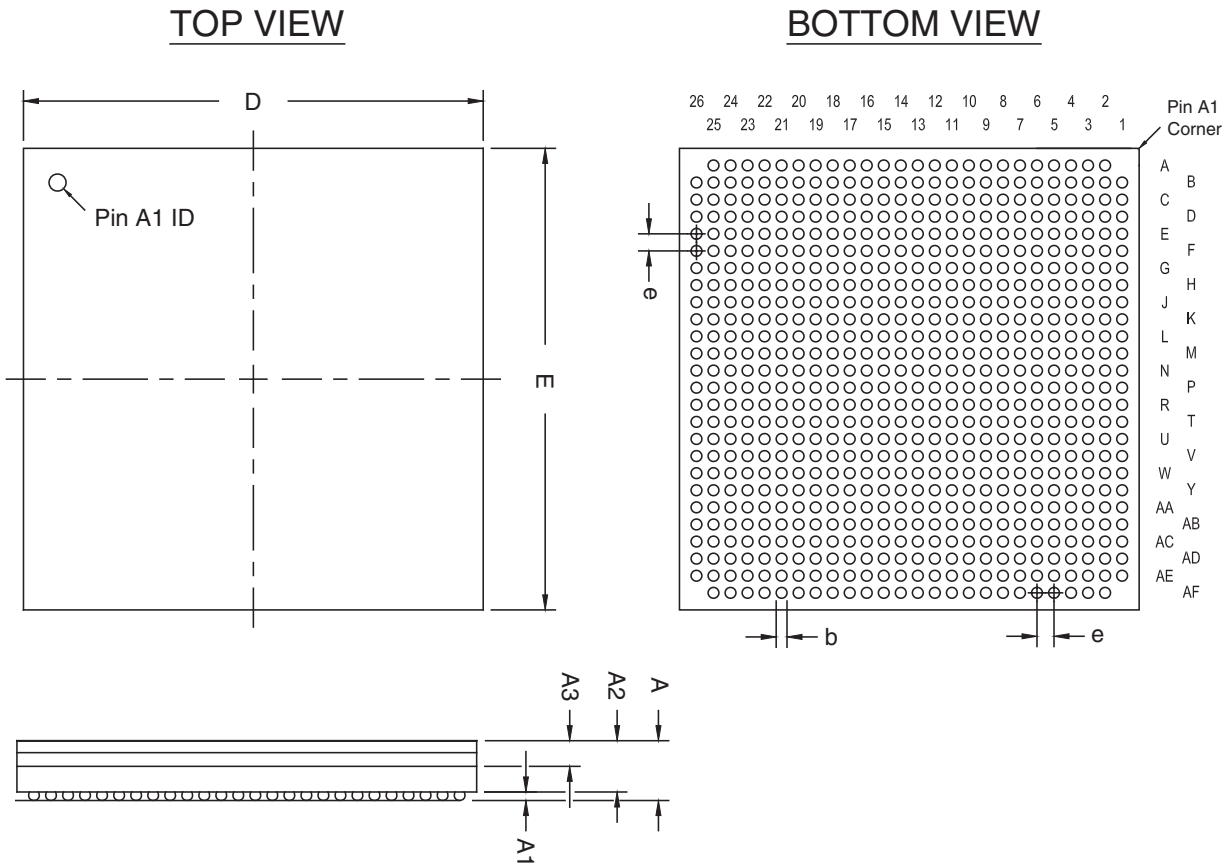

672-Pin FineLine Ball-Grid Array (FBGA), Option 2—Wire Bond

- All dimensions and tolerances conform to ASME Y14.5M - 1994.
- Controlling dimension is in millimeters.
- Pin A1 may be indicated by an ID dot, or a special feature, in its proximity on package surface.

Package Information	
Description	**Specification**
Ordering Code Reference	F
Package Acronym	FBGA
Substrate Material	BT
Solder Ball Composition	Regular: 63Sn:37Pb (Typ.) Pb-free: Sn:3Ag:0.5Cu (Typ.)
JEDEC Outline Reference	MS-034 Variation: AAL-1
Lead Coplanarity	0.008 inches (0.20 mm)
Weight	3.8 g (Typ.)
Moisture Sensitivity Level	Printed on moisture barrier bag

Package Outline Dimension Table			
Symbol	**Millimeters**		
	Min.	**Nom.**	**Max.**
A	—	—	2.60
A1	0.30	—	—
A2	—	—	2.20
A3	—	—	1.80
D	27.00 BSC		
E	27.00 BSC		
b	0.50	0.60	0.70
e	1.00 BSC		

Package Outline

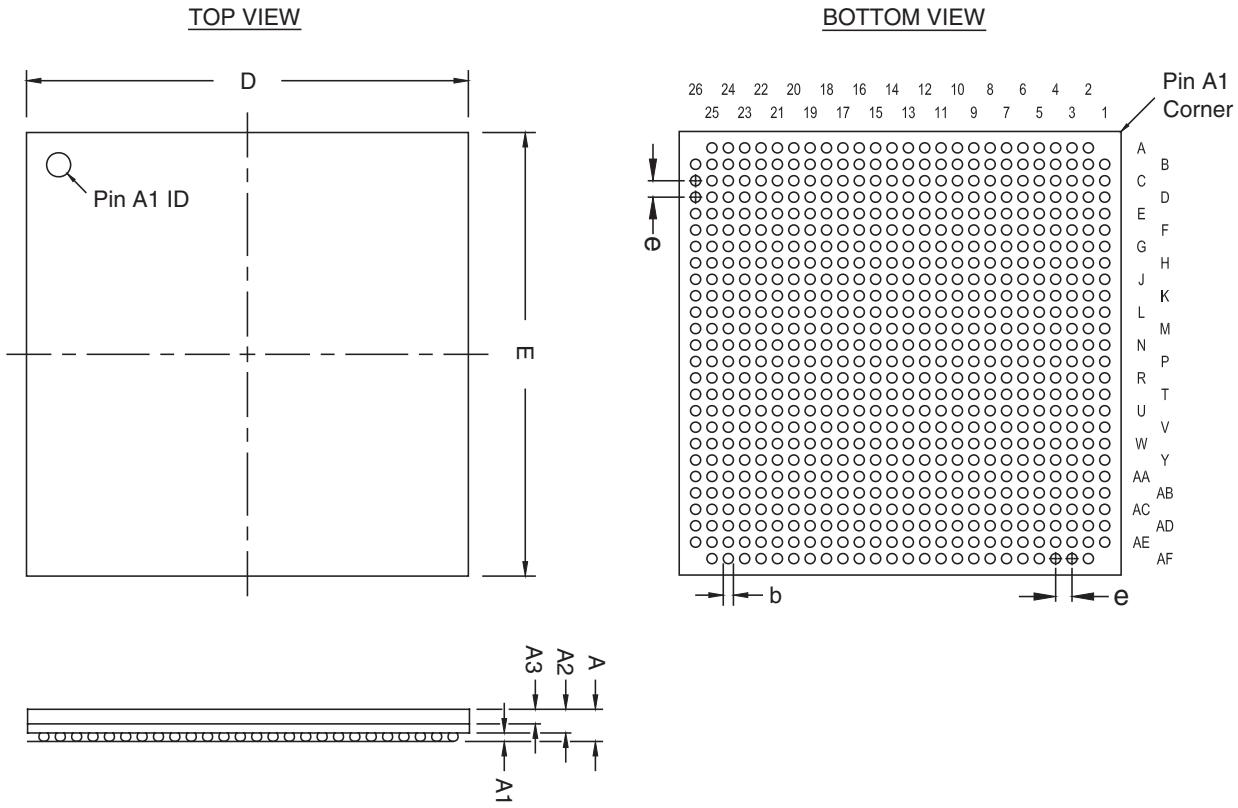

672-Pin FineLine Ball-Grid Array (FBGA), Option 4—Flip Chip

- All dimensions and tolerances conform to ASME Y14.5M - 1994.
- Controlling dimension is in millimeters.
- Pin A1 may be indicated by an ID dot, or a special feature, in its proximity on package surface.

Package Information	
Description	**Specification**
Ordering Code Reference	F
Package Acronym	FBGA
Substrate Material	BT
Solder Ball Composition	Regular: 63Sn:37Pb (Typ.) Pb-free: Sn:3Ag:0.5Cu (Typ.)
JEDEC Outline Reference	MS-034 Variation: AAL-1
Lead Coplanarity	0.008 inches (0.20 mm)
Weight	7.1 g (Typ.)
Moisture Sensitivity Level	Printed on moisture barrier bag

Package Outline Dimension Table			
Symbol	**Millimeters**		
	Min.	**Nom.**	**Max.**
A	—	—	3.50
A1	0.30	—	—
A2	0.25	—	3.00
A3	—	—	2.50
D	27.00 BSC		
D1	20.00 BSC		
E	27.00 BSC		
E1	20.00 BSC		
b	0.50	0.60	0.70
e	1.00 BSC		

Package Outline

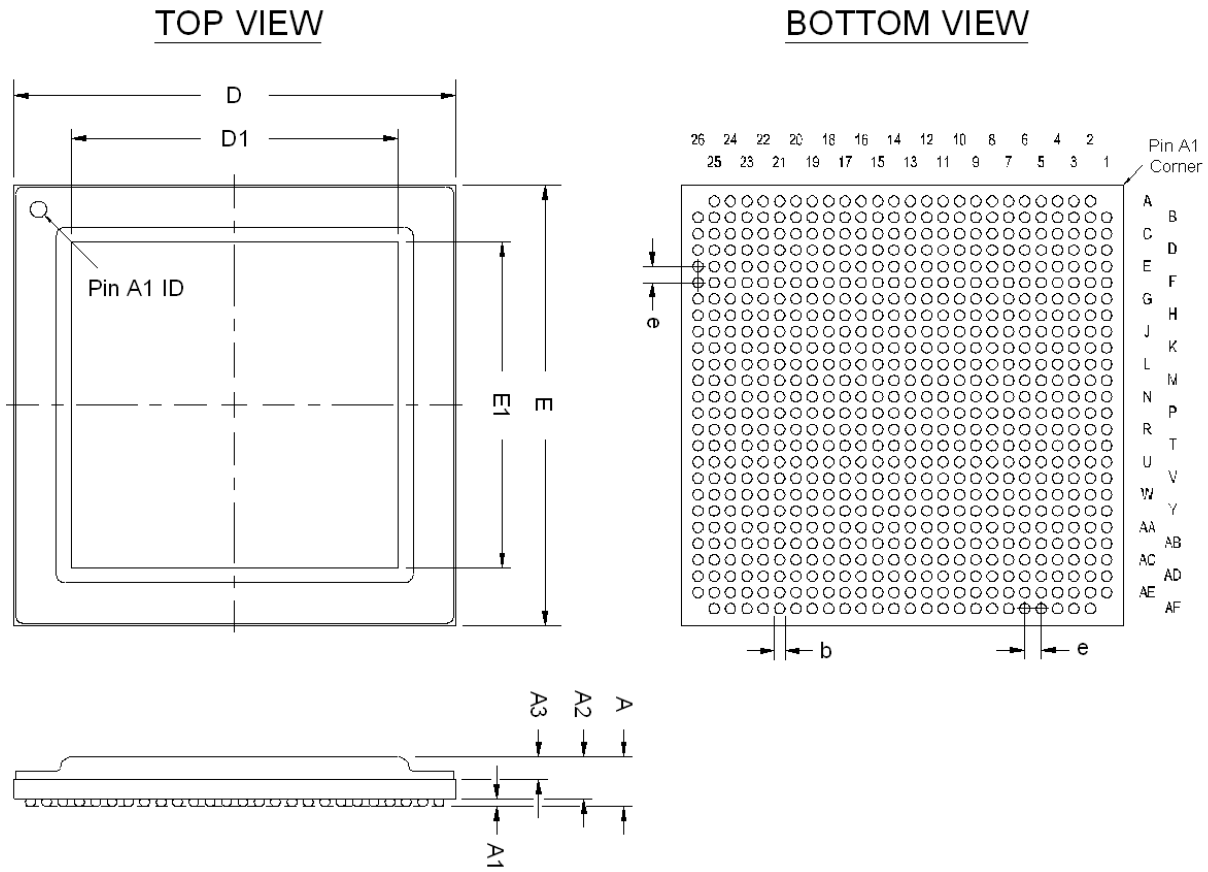

672-Pin FineLine Ball-Grid Array (FBGA)—Wire Bond—A:2.40

- All dimensions and tolerances conform to ASME Y14.5M - 1994.
- Controlling dimension is in millimeters.
- Pin A1 may be indicated by an ID dot, or a special feature, in its proximity on package surface.

Package Information	
Description	**Specification**
Ordering Code Reference	F
Package Acronym	FBGA
Substrate Material	BT
Solder Ball Composition	Regular: 63Sn:37Pb (Typ.) Pb-free: Sn:3Ag:0.5Cu (Typ.)
JEDEC Outline Reference	MS-034 Variation: AAL-1
Lead Coplanarity	0.008 inches (0.20 mm)
Weight	3.0 g (Typ.)
Moisture Sensitivity Level	Printed on moisture barrier bag

Package Outline Dimension Table			
Symbol	**Millimeters**		
	Min.	**Nom.**	**Max.**
A	2.10	2.25	2.40
A1	0.40	0.50	0.60
A2	1.50	1.75	2.00
A3	1.12	1.17	1.22
D	27.00 BSC		
E	27.00 BSC		
b	0.50	0.60	0.70
e	1.00 BSC		

Package Outline

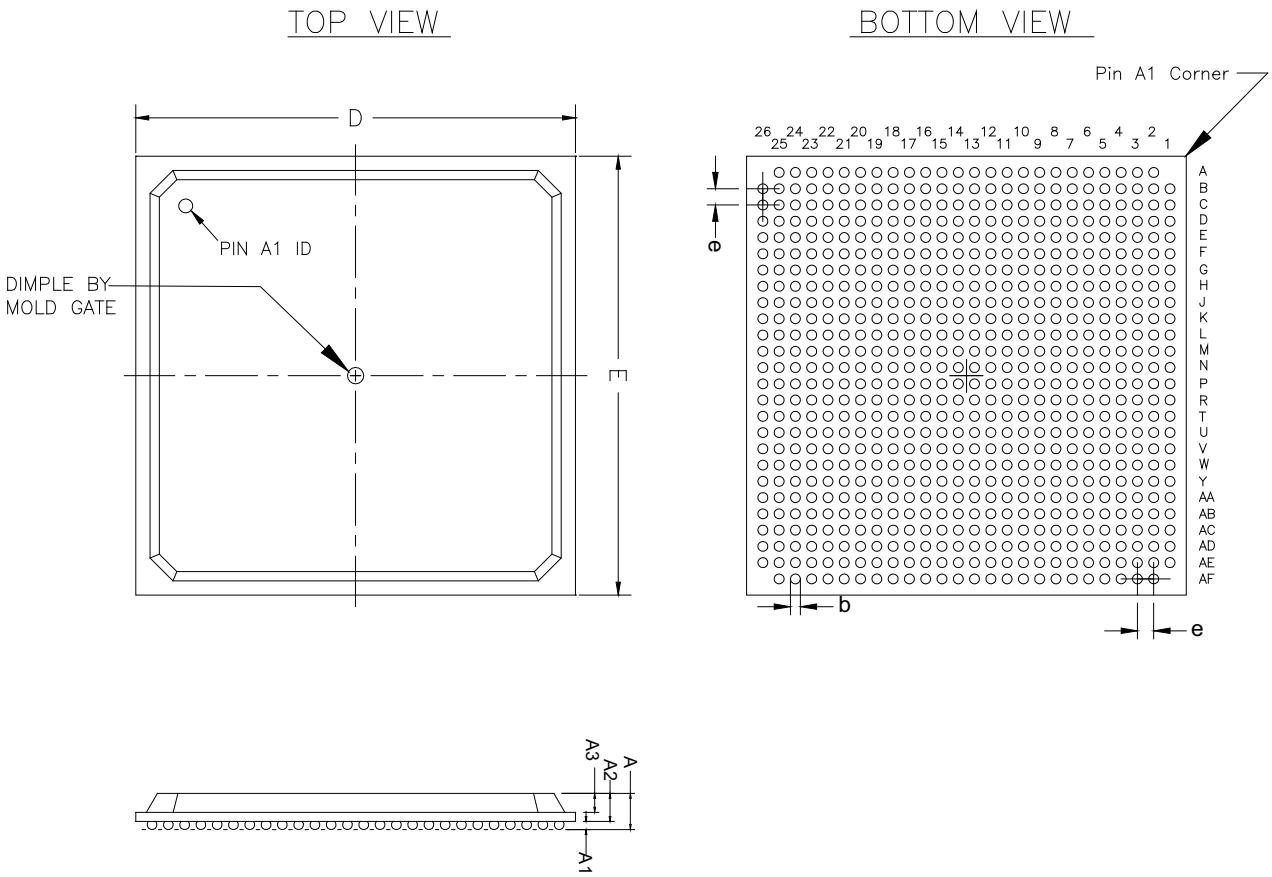

724-Pin Ball-Grid Array (BGA)—Flip Chip

- All dimensions and tolerances conform to ASME Y14.5M - 1994.
- Controlling dimension is in millimeters.
- Pin A1 may be indicated by an ID dot, or a special feature, in its proximity on package surface.

Package Information	
Description	**Specification**
Ordering Code Reference	B
Package Acronym	BGA
Substrate Material	BT
Solder Ball Composition	Regular: 63Sn:37Pb (Typ.) Pb-free: Sn:3Ag:0.5Cu (Typ.)
JEDEC Outline Reference	MS-034 Variation: BAR-1
Lead Coplanarity	0.008 inches (0.20 mm)
Weight	13.6 g (Typ.)
Moisture Sensitivity Level	Printed on moisture barrier bag

Package Outline Dimension Table			
Symbol	**Millimeters**		
	Min.	**Nom.**	**Max.**
A	—	—	3.50
A1	0.30	—	—
A2	0.25	—	3.00
A3	—	—	2.50
D	35.00 BSC		
E	35.00 BSC		
b	0.60	0.75	0.90
e	1.27 BSC		

Package Outline

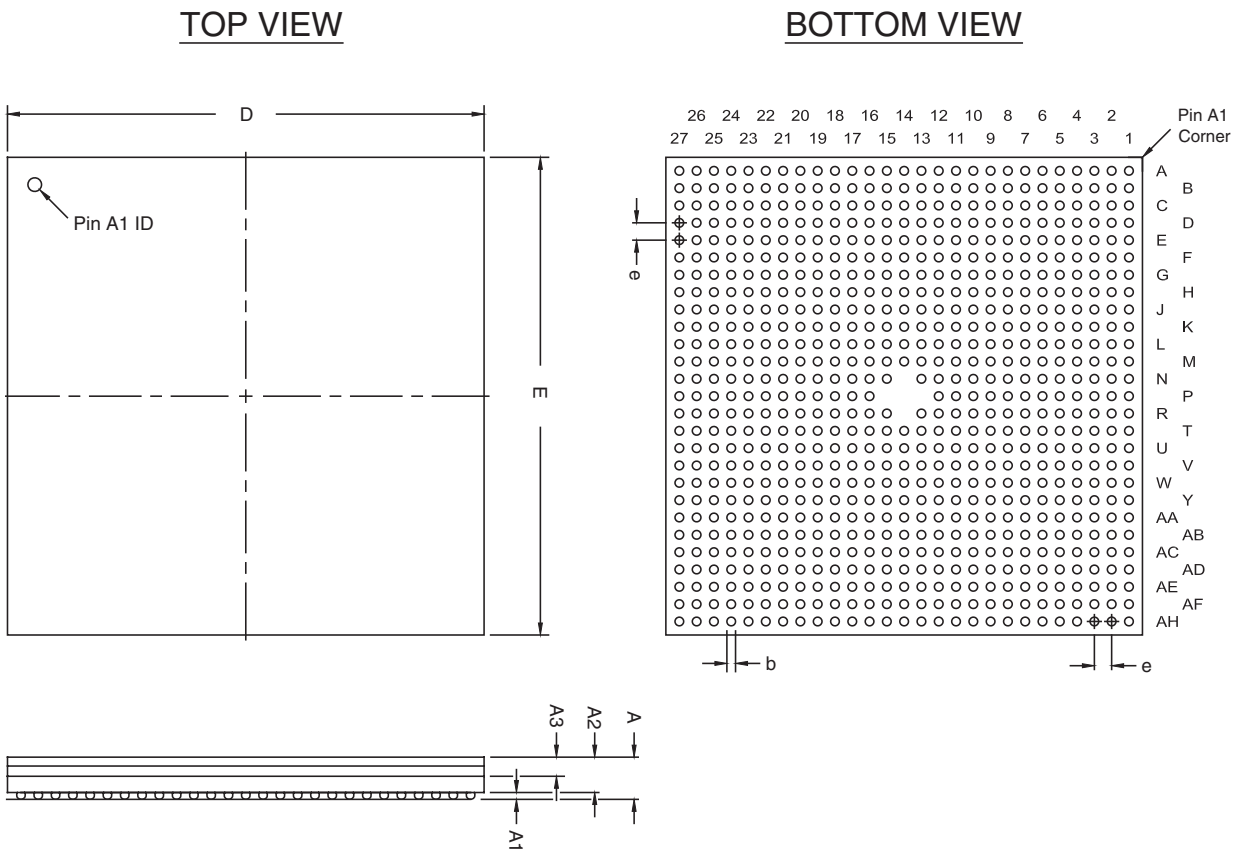

780-Pin FineLine Ball-Grid Array (FBGA), Option 1—Flip Chip

- All dimensions and tolerances conform to ASME Y14.5M - 1994.
- Controlling dimension is in millimeters.
- Pin A1 may be indicated by an ID dot, or a special feature, in its proximity on package surface.

Package Information	
Description	**Specification**
Ordering Code Reference	F
Package Acronym	FBGA
Substrate Material	BT
Solder Ball Composition	Regular: 63Sn:37Pb (Typ.) Pb-free: Sn:3Ag:0.5Cu (Typ.)
JEDEC Outline Reference	MS-034 Variation: AAM-1
Lead Coplanarity	0.008 inches (0.20 mm)
Weight	10.7 g (Typ.)
Moisture Sensitivity Level	Printed on moisture barrier bag

Package Outline Dimension Table			
Symbol	**Millimeters**		
	Min.	**Nom.**	**Max.**
A	—	—	3.50
A1	0.30	—	—
A2	0.25	—	3.00
A3	—	—	2.50
D	29.00 BSC		
E	29.00 BSC		
b	0.50	0.60	0.70
e	1.00 BSC		

Package Outline

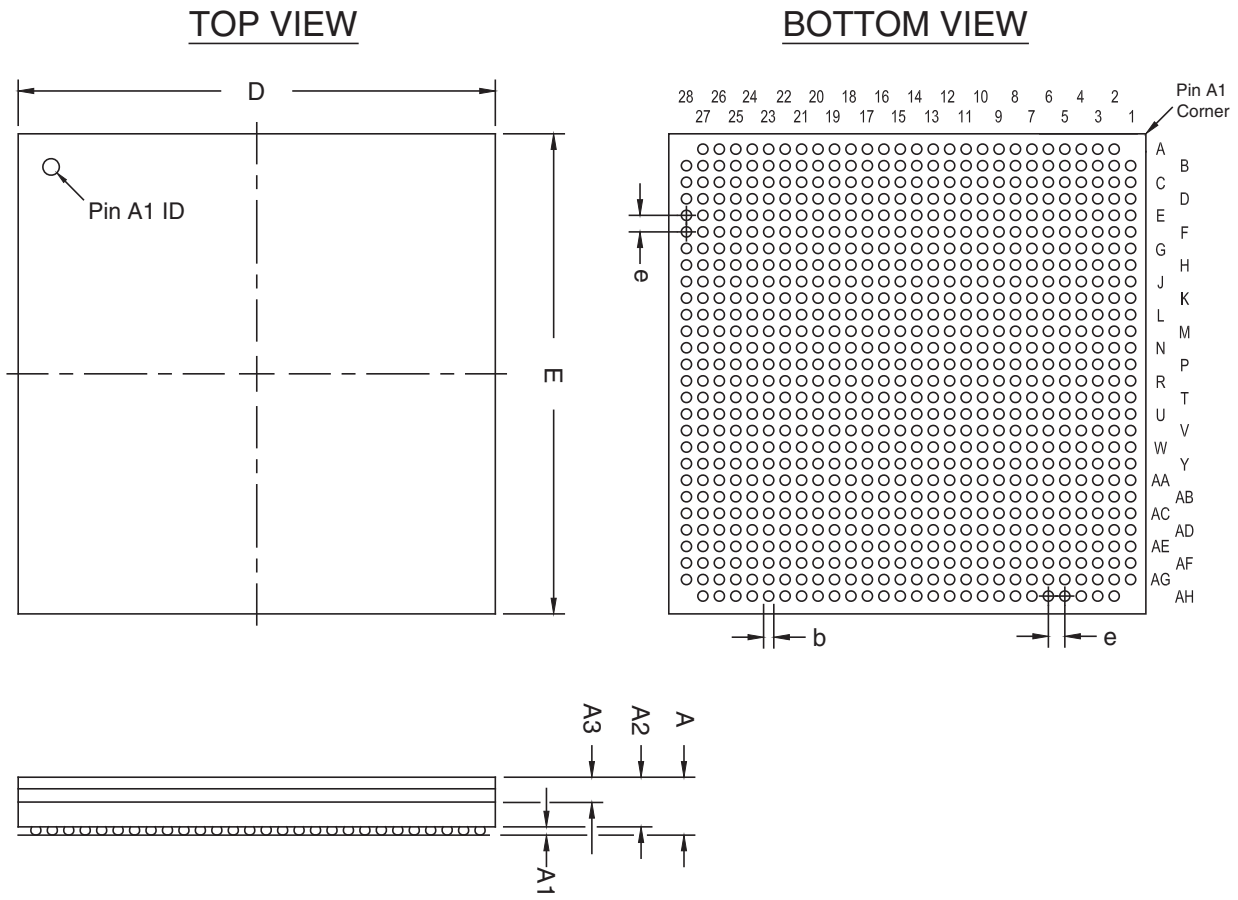

780-Pin FineLine Ball-Grid Array (FBGA), Option 1—Flip Chip—Channel Lid

- All dimensions and tolerances conform to ASME Y14.5M - 1994.
- Controlling dimension is in millimeters.
- Pin A1 may be indicated by an ID dot, or a special feature, in its proximity on package surface.

Package Information	
Description	**Specification**
Ordering Code Reference	F
Package Acronym	FBGA
Substrate Material	BT
Solder Ball Composition	Regular: 63Sn:37Pb (Typ.) Pb-free: Sn:3Ag:0.5Cu (Typ.)
JEDEC Outline Reference	MO-034 Variation: AAM-1
Lead Coplanarity	0.008 inches (0.20 mm)
Weight	9.5 g (Typ.)
Moisture Sensitivity Level	Printed on moisture barrier bag

Package Outline Dimension Table			
Symbol	**Millimeters**		
	Min.	**Nom.**	**Max.**
A	3.05	3.25	3.45
A1	0.40	0.50	0.60
A2	2.45	2.75	3.05
A3	1.45	1.55	1.65
D	29.00 BSC		
E	29.00 BSC		
b	0.50	0.60	0.70
e	1.00 BSC		

Package Outline

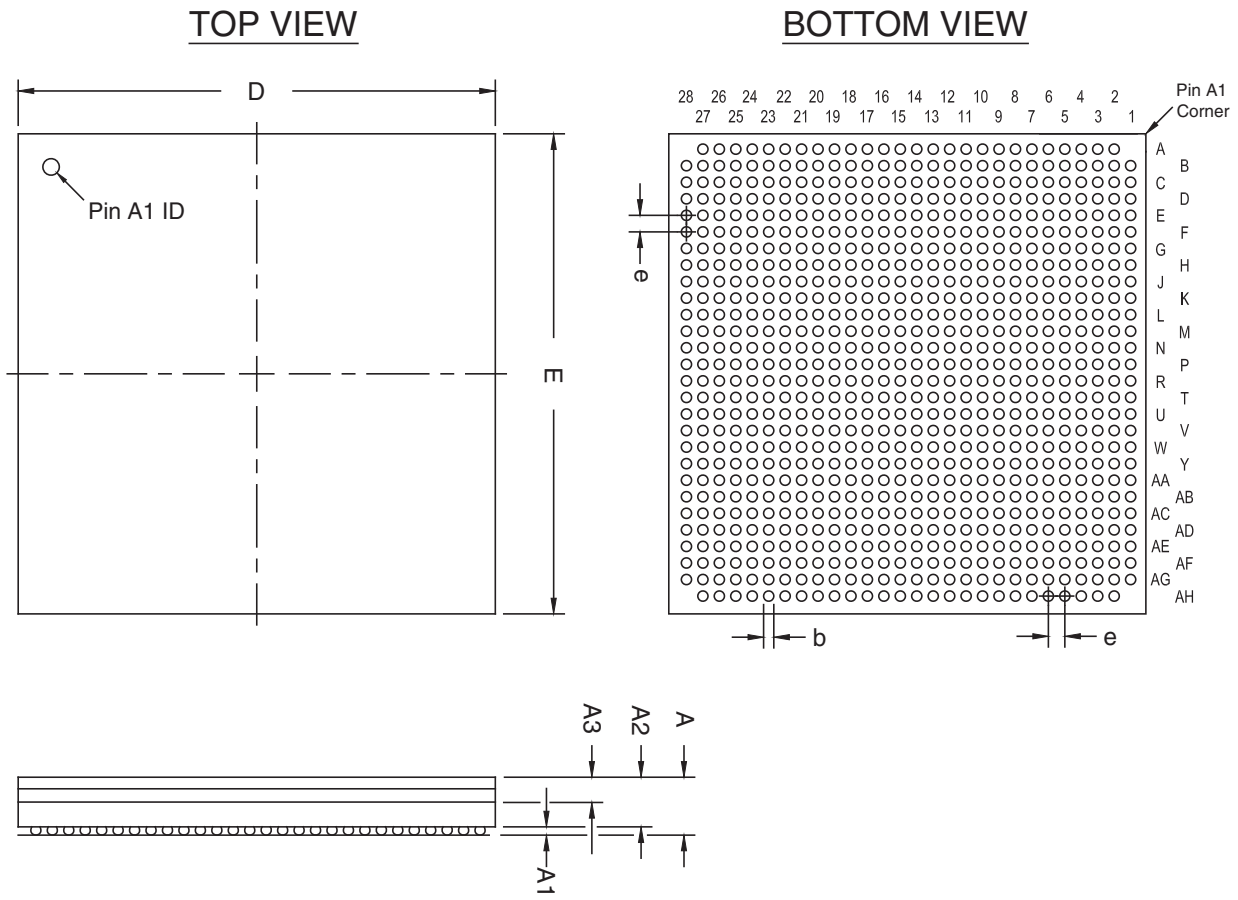

780-Pin FineLine Ball-Grid Array (FBGA), Option 3—Flip Chip

- All dimensions and tolerances conform to ASME Y14.5M - 1994.
- Controlling dimension is in millimeters.
- Pin A1 may be indicated by an ID dot, or a special feature, in its proximity on package surface.

Package Information	
Description	**Specification**
Ordering Code Reference	F
Package Acronym	FBGA
Substrate Material	BT
Solder Ball Composition	Regular: 63Sn:37Pb (Typ.) Pb-free: Sn:3Ag:0.5Cu (Typ.)
JEDEC Outline Reference	MS-034 Variation: AAM-1
Lead Coplanarity	0.008 inches (0.20 mm)
Weight	8.2 g (Typ.)
Moisture Sensitivity Level	Printed on moisture barrier bag

Package Outline Dimension Table			
Symbol	**Millimeters**		
	Min.	**Nom.**	**Max.**
A	—	—	3.50
A1	0.30	—	—
A2	0.25	—	3.00
A3	—	—	2.50
D	29.00 BSC		
D1	21.00 BSC		
E	29.00 BSC		
E1	21.00 BSC		
b	0.50	0.60	0.70
e	1.00 BSC		

Package Outline

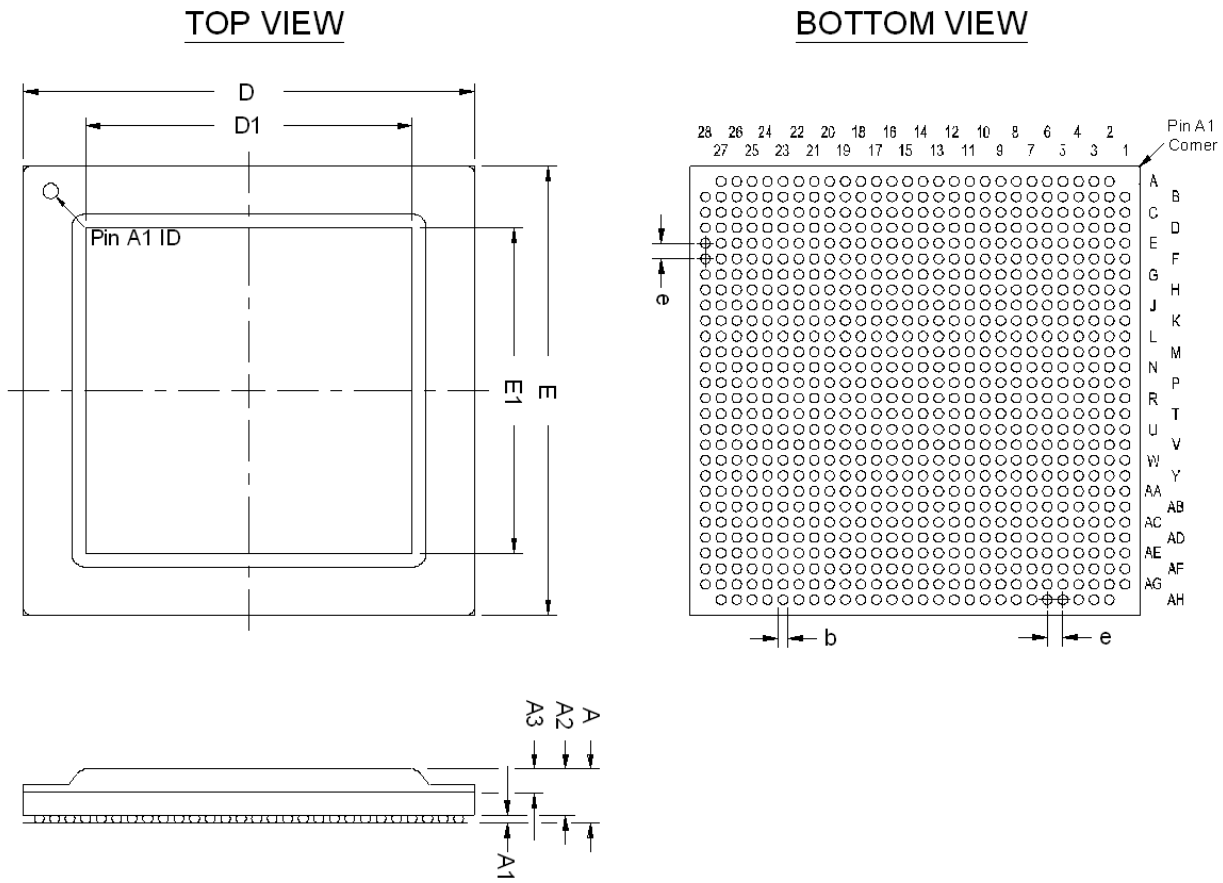

896-Pin FineLine Ball-Grid Array (FBGA)—Wire Bond—A:2.40

- All dimensions and tolerances conform to ASME Y14.5M – 1994.
- Controlling dimension is in millimeters.
- Pin A1 may be indicated by an ID dot, or a special feature, in its proximity on package surface.

Package Information	
Description	**Specification**
Ordering Code Reference	F
Package Acronym	FBGA
Substrate Material	BT
Solder Ball Composition	Regular: 63Sn:37Pb (Typ.) Pb-free: Sn:3Ag:0.5Cu (Typ.)
JEDEC Outline Reference	MS-034 Variation: AAN-1
Lead Coplanarity	0.008 inches (0.20 mm)
Weight	3.9 g (Typ.)
Moisture Sensitivity Level	Printed on moisture barrier bag

Package Outline Dimension Table			
Symbol	**Millimeters**		
	Min.	**Nom.**	**Max.**
A	2.10	2.25	2.40
A1	0.40	0.50	0.60
A2	1.50	1.75	2.00
A3	1.12	1.17	1.22
D	31.00 BSC		
E	31.00 BSC		
b	0.50	0.60	0.70
e	1.00 BSC		

Package Outline

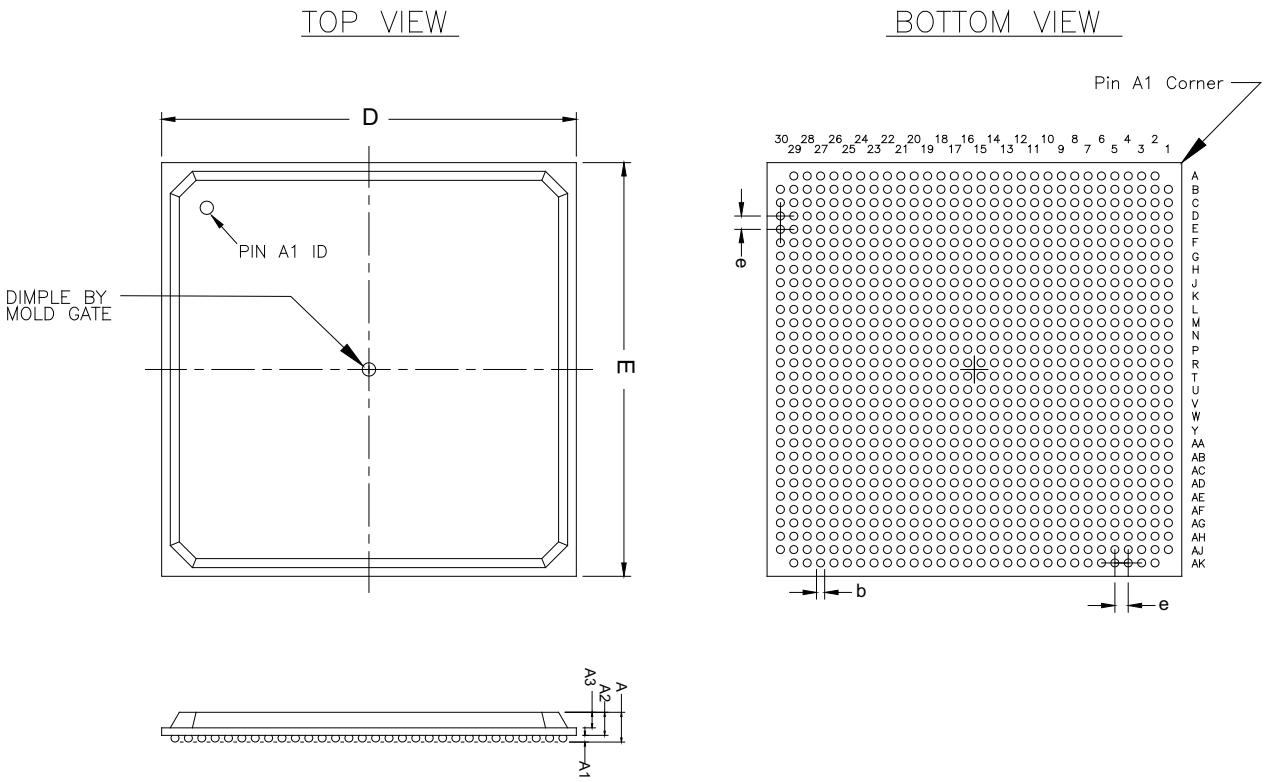

956-Pin Ball-Grid Array (BGA), Option 1—Flip Chip

- All dimensions and tolerances conform to ASME Y14.5M - 1994.
- Controlling dimension is in millimeters.
- Pin A1 may be indicated by an ID dot, or a special feature, in its proximity on package surface.

Package Information	
Description	**Specification**
Ordering Code Reference	B
Package Acronym	BGA
Substrate Material	BT
Solder Ball Composition	Regular: 63Sn:37Pb (Typ.) Pb-free: Sn:3Ag:0.5Cu (Typ.)
JEDEC Outline Reference	MS-034 Variation: BAU-1
Lead Coplanarity	0.008 inches (0.20 mm)
Weight	19.6 g (Typ.)
Moisture Sensitivity Level	Printed on moisture barrier bag

Package Outline Dimension Table			
Symbol	**Millimeters**		
	Min.	**Nom.**	**Max.**
A	—	—	3.50
A1	0.30	—	—
A2	0.25	—	3.00
A3	—	—	2.50
D	40.00 BSC		
E	40.00 BSC		
b	0.60	0.75	0.90
e	1.27 BSC		

Package Outline

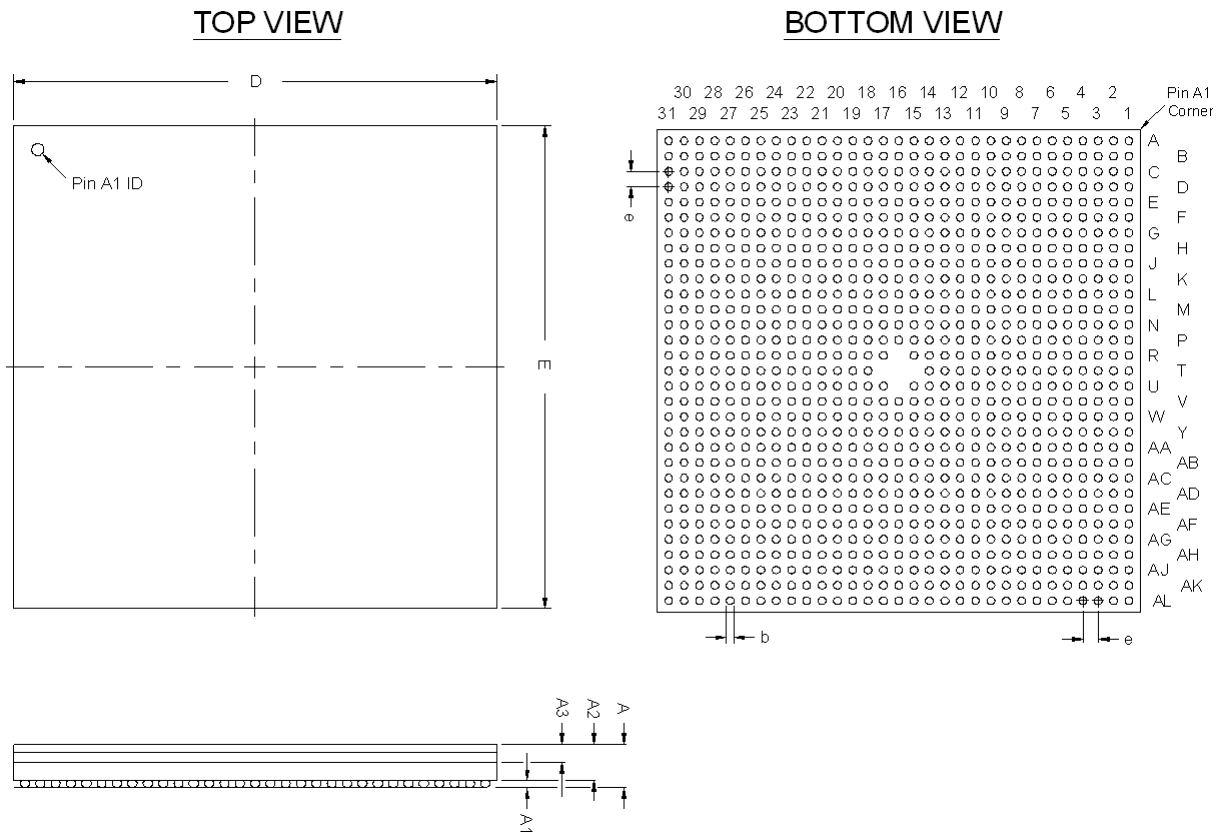

956-Pin Ball-Grid Array (BGA), Option 2—Flip Chip

- All dimensions and tolerances conform to ASME Y14.5M - 1994.
- Controlling dimension is in millimeters.
- Pin A1 may be indicated by an ID dot, or a special feature, in its proximity on package surface.

Package Information	
Description	**Specification**
Ordering Code Reference	B
Package Acronym	BGA
Substrate Material	BT
Solder Ball Composition	Regular: 63Sn:37Pb (Typ.) Pb-free: Sn:3Ag:0.5Cu (Typ.)
JEDEC Outline Reference	MS-034 Variation: BAU-1
Lead Coplanarity	0.008 inches (0.20 mm)
Weight	17.0 g (Typ.)
Moisture Sensitivity Level	Printed on moisture barrier bag

Package Outline Dimension Table			
Symbol	**Millimeters**		
	Min.	**Nom.**	**Max.**
A	—	—	3.50
A1	0.30	—	—
A2	0.25	—	3.00
A3	—	—	2.50
D	40.00 BSC		
D1	30.00 BSC		
E	40.00 BSC		
E1	30.00 BSC		
b	0.60	0.75	0.90
e	1.27 BSC		

Package Outline

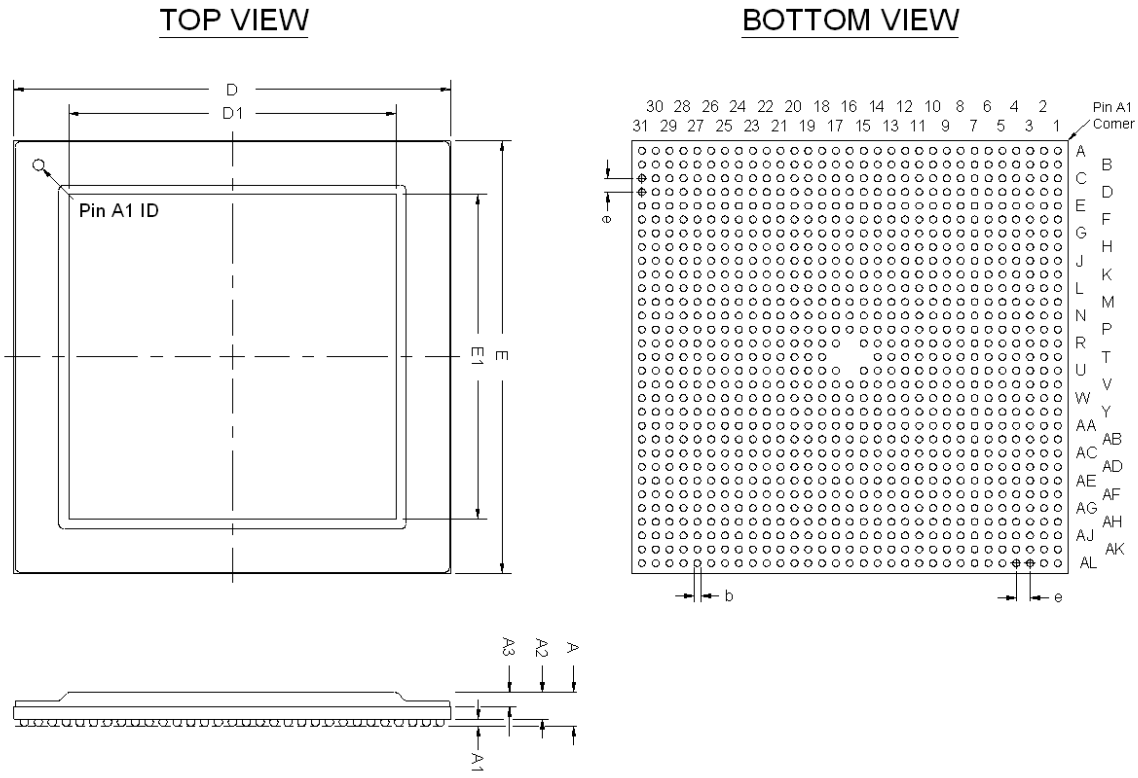

1020-Pin FineLine Ball-Grid Array (FBGA), Option 1—Flip Chip

- All dimensions and tolerances conform to ASME Y14.5M - 1994.
- Controlling dimension is in millimeters.
- Pin A1 may be indicated by an ID dot, or a special feature, in its proximity on package surface.

Package Information	
Description	**Specification**
Ordering Code Reference	F
Package Acronym	FBGA
Substrate Material	BT
Solder Ball Composition	Regular: 63Sn:37Pb (Typ.) Pb-free: Sn:3Ag:0.5Cu (Typ.)
JEDEC Outline Reference	MS-034 Variation: AAP-1
Lead Coplanarity	0.008 inches (0.20 mm)
Weight	13.8 g (Typ.)
Moisture Sensitivity Level	Printed on moisture barrier bag

Package Outline Dimension Table			
Symbol	**Millimeters**		
	Min.	**Nom.**	**Max.**
A	—	—	3.50
A1	0.30	—	—
A2	0.25	—	3.00
A3	—	—	2.50
D	33.00 BSC		
E	33.00 BSC		
b	0.50	0.60	0.70
e	1.00 BSC		

Package Outline

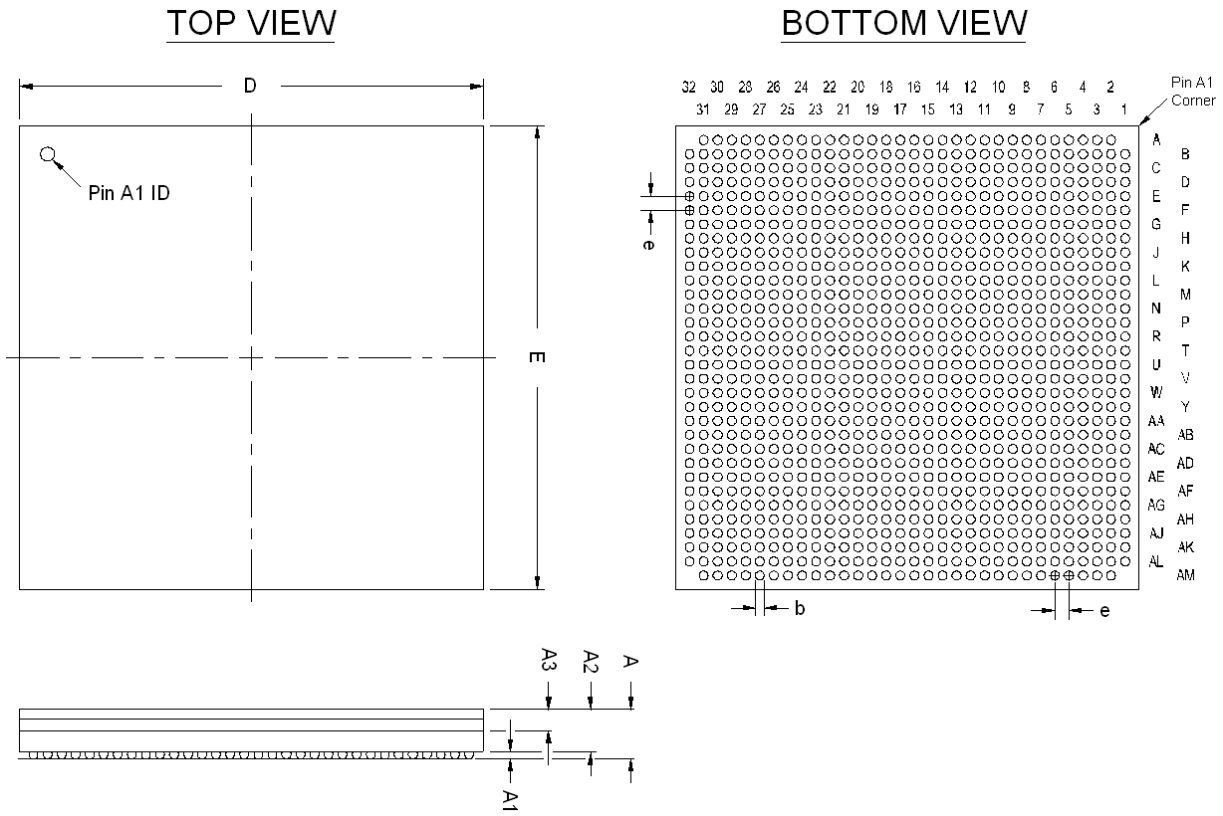

1020-Pin FineLine Ball-Grid Array (FBGA), Option 2—Flip Chip

- All dimensions and tolerances conform to ASME Y14.5M - 1994.
- Controlling dimension is in millimeters.
- Pin A1 may be indicated by an ID dot, or a special feature, in its proximity on package surface.

Package Information	
Description	**Specification**
Ordering Code Reference	F
Package Acronym	FBGA
Substrate Material	BT
Solder Ball Composition	Regular: 63Sn:37Pb (Typ.) Pb-free: Sn:3Ag:0.5Cu (Typ.)
JEDEC Outline Reference	MS-034 Variation: AAP-1
Lead Coplanarity	0.008 inches (0.20 mm)
Weight	10.8 g (Typ.)
Moisture Sensitivity Level	Printed on moisture barrier bag

Package Outline Dimension Table			
Symbol	**Millimeters**		
	Min.	**Nom.**	**Max.**
A	—	—	3.50
A1	0.30	—	—
A2	0.25	—	3.00
A3	—	—	2.50
D	33.00 BSC		
D1	26.00 BSC		
E	33.00 BSC		
E1	26.00 BSC		
b	0.50	0.60	0.70
e	1.00 BSC		

Package Outline

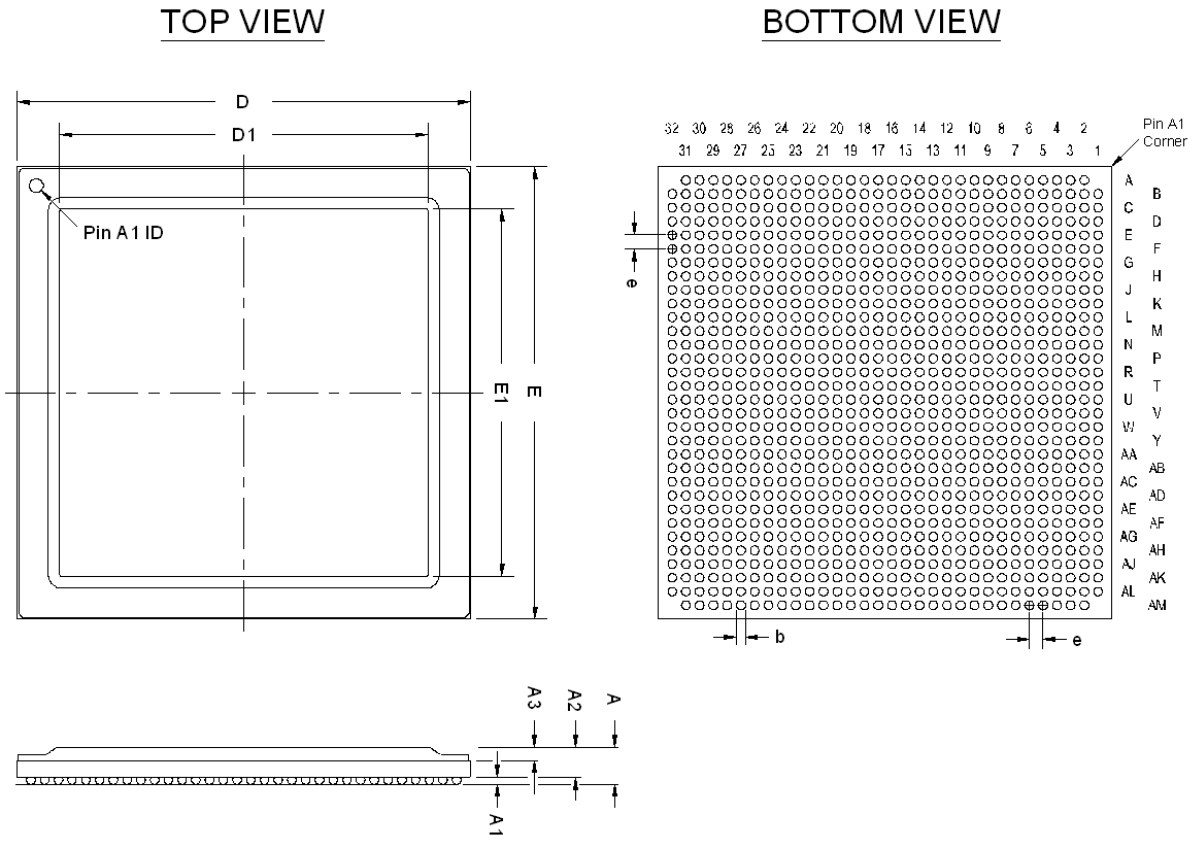

1152-Pin FineLine Ball-Grid Array (FBGA), Option 1—Flip Chip

- All dimensions and tolerances conform to ASME Y14.5M - 1994.
- Controlling dimension is in millimeters.
- Pin A1 may be indicated by an ID dot, or a special feature, in its proximity on package surface.

Package Information	
Description	**Specification**
Ordering Code Reference	F
Package Acronym	FBGA
Substrate Material	BT
Solder Ball Composition	Regular: 63Sn:37Pb (Typ.) Pb-free: Sn:3Ag:0.5Cu (Typ.)
JEDEC Outline Reference	MS-034 Variation: AAR-1
Lead Coplanarity	0.008 inches (0.20 mm)
Weight	15.5 g (Typ.)
Moisture Sensitivity Level	Printed on moisture barrier bag

Package Outline Dimension Table			
Symbol	**Millimeters**		
	Min.	**Nom.**	**Max.**
A	—	—	3.50
A1	0.30	—	—
A2	0.25	—	3.00
A3	—	—	2.50
D	35.00 BSC		
E	35.00 BSC		
b	0.50	0.60	0.70
e	1.00 BSC		

Package Outline

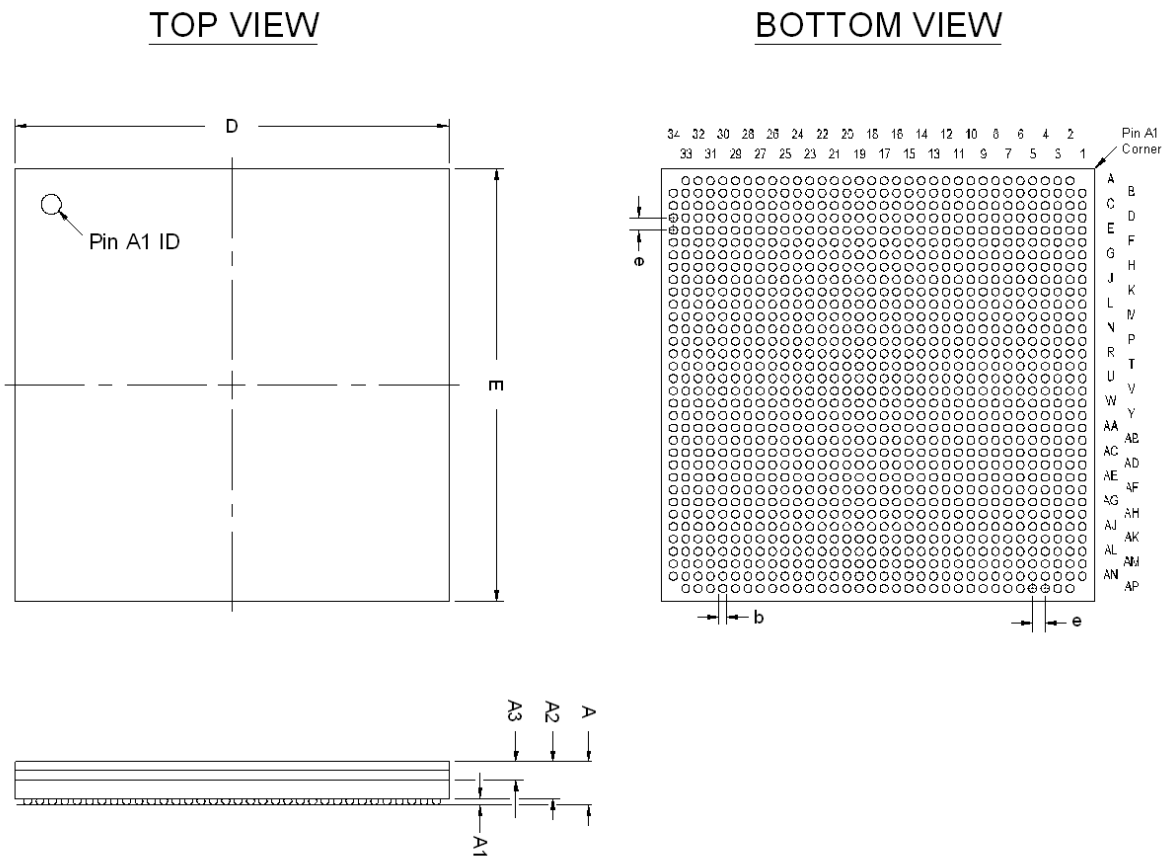

1152-Pin FineLine Ball-Grid Array (FBGA), Option 2—Flip Chip

- All dimensions and tolerances conform to ASME Y14.5M - 1994.
- Controlling dimension is in millimeters.
- Pin A1 may be indicated by an ID dot, or a special feature, in its proximity on package surface.

Package Information	
Description	**Specification**
Ordering Code Reference	F
Package Acronym	FBGA
Substrate Material	BT
Solder Ball Composition	Regular: 63Sn:37Pb (Typ.) Pb-free: Sn:3Ag:0.5Cu (Typ.)
JEDEC Outline Reference	MS-034 Variation: AAR-1
Lead Coplanarity	0.008 inches (0.20 mm)
Weight	12.4 g (Typ.)
Moisture Sensitivity Level	Printed on moisture barrier bag

Package Outline Dimension Table			
Symbol	**Millimeters**		
	Min.	**Nom.**	**Max.**
A	—	—	3.50
A1	0.30	—	—
A2	0.25	—	3.00
A3	—	—	2.50
D	35.00 BSC		
D1	27.00 BSC		
E	35.00 BSC		
E1	27.00 BSC		
b	0.50	0.60	0.70
e	1.00 BSC		

Package Outline

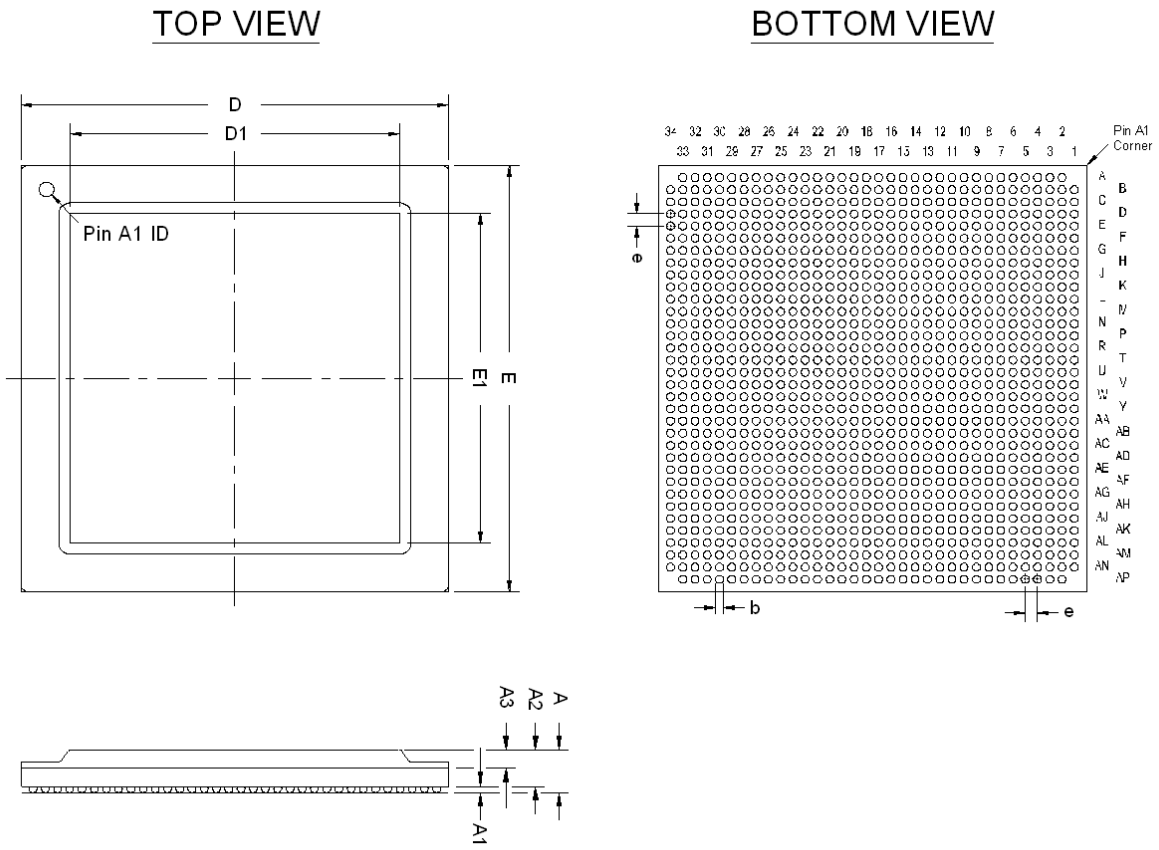

1508-Pin FineLine Ball-Grid Array (FBGA), Option 1—Flip Chip

- All dimensions and tolerances conform to ASME Y14.5M - 1994.
- Controlling dimension is in millimeters.
- Pin A1 may be indicated by an ID dot, or a special feature, in its proximity on package surface.

Package Information	
Description	**Specification**
Ordering Code Reference	F
Package Acronym	FBGA
Substrate Material	BT
Solder Ball Composition	Regular: 63Sn:37Pb (Typ.) Pb-free: Sn:3Ag:0.5Cu (Typ.)
JEDEC Outline Reference	MS-034 Variation: AAU-1
Lead Coplanarity	0.008 inches (0.20 mm)
Weight	18.9 g (Typ.)
Moisture Sensitivity Level	Printed on moisture barrier bag

Package Outline Dimension Table			
Symbol	**Millimeters**		
	Min.	**Nom.**	**Max.**
A	—	—	3.50
A1	0.30	—	—
A2	0.25	—	3.00
A3	—	—	2.50
D	40.00 BSC		
E	40.00 BSC		
b	0.50	0.60	0.70
e	1.00 BSC		

Package Outline

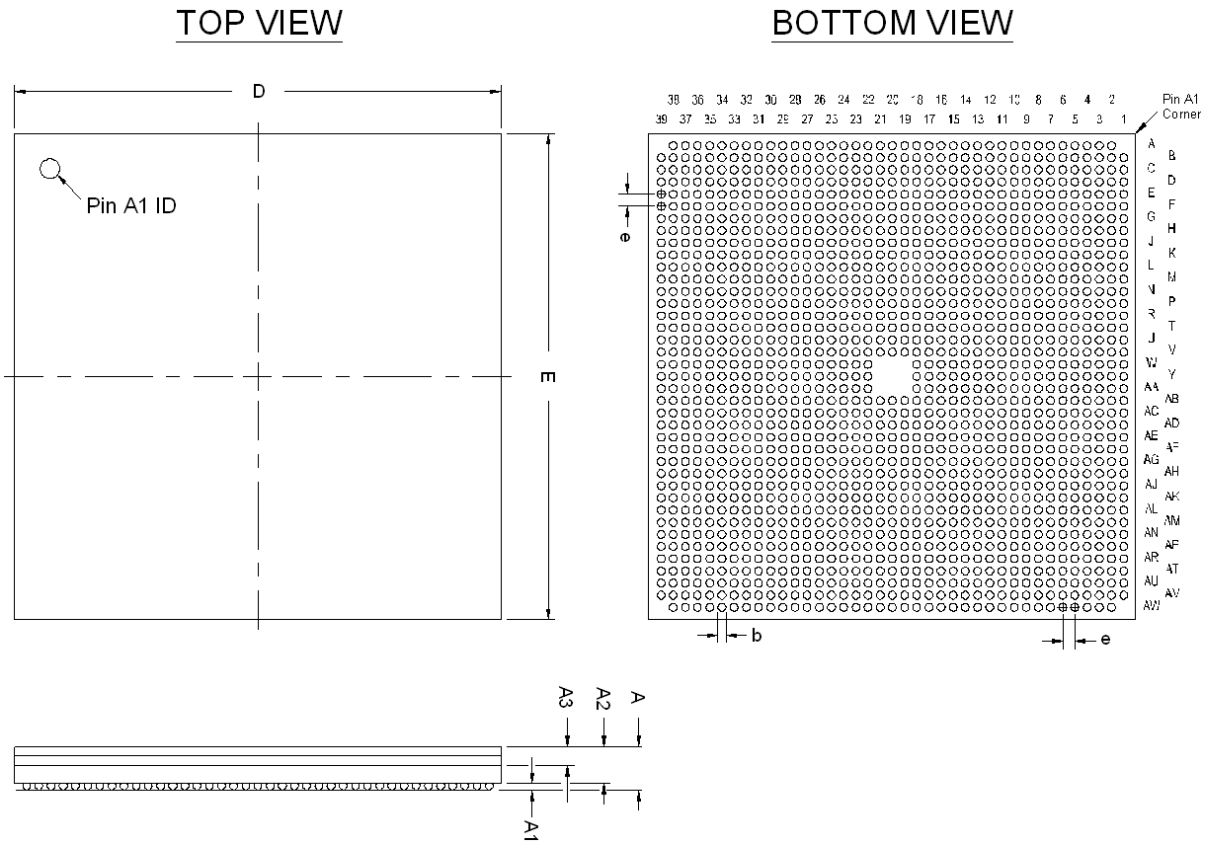

1508-Pin FineLine Ball-Grid Array (FBGA), Option 2—Flip Chip

- All dimensions and tolerances conform to ASME Y14.5M - 1994.
- Controlling dimension is in millimeters.
- Pin A1 may be indicated by an ID dot, or a special feature, in its proximity on package surface.

Package Information	
Description	**Specification**
Ordering Code Reference	F
Package Acronym	FBGA
Substrate Material	BT
Solder Ball Composition	Regular: 63Sn:37Pb (Typ.) Pb-free: Sn:3Ag:0.5Cu (Typ.)
JEDEC Outline Reference	MS-034 Variation: AAU-1
Lead Coplanarity	0.008 inches (0.20 mm)
Weight	15.9 g (Typ.)
Moisture Sensitivity Level	Printed on moisture barrier bag

Package Outline Dimension Table			
Symbol	**Millimeters**		
	Min.	**Nom.**	**Max.**
A	—	—	3.50
A1	0.30	—	—
A2	0.25	—	3.00
A3	—	—	2.50
D	40.00 BSC		
D1	30.00 BSC		
E	40.00 BSC		
E1	30.00 BSC		
b	0.50	0.60	0.70
e	1.00 BSC		

Package Outline

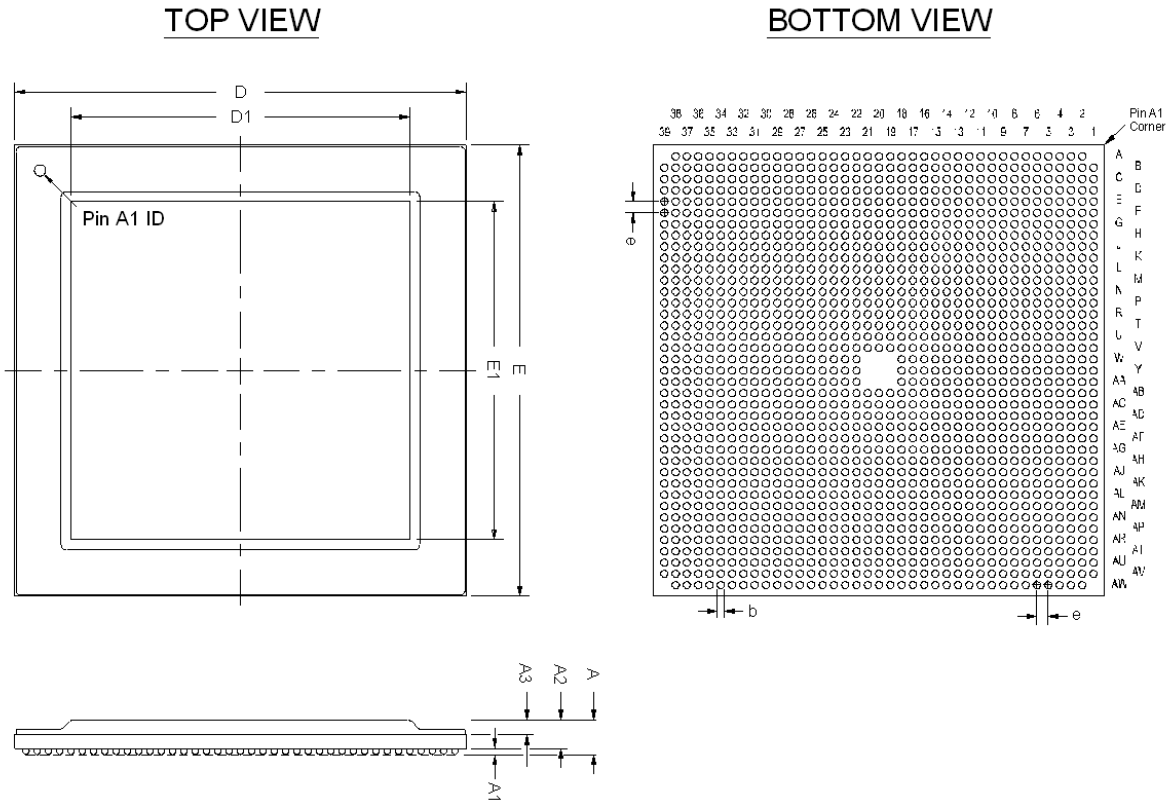

Additional Information

This section contains revision history and contact information.

Revision History

Table 60 lists the revision history for this document.

Table 60. Document Revision History *(1)* (Part 1 of 13)

Date and Document Version	Changes Made	Summary of Changes
December 2011	■ Added "896-Pin FineLine Ball-Grid Array (FBGA)—Wire Bond—A:2.40", "484-Pin FineLine Ball-Grid Array (FBGA)—Wire Bond—A:2.40", and "672-Pin FineLine Ball-Grid Array (FBGA)—Wire Bond—A:2.40".	Updated for version 16.8
November 2011	■ Added Table 9 on page 10.	Updated for version 16.7
August 2011	■ Removed HardCopy III, HardCopy IV, MAX V, MAX II, Classic, and EPCS devices' package listing and thermal resistance values.	Updated for version 16.6
July 2011	■ Removed Arria II, Stratix V, Stratix IV, Stratix III, Cyclone IV, and Cyclone III devices' package listing and thermal resistance values.	Updated for version 16.5

Table 60. Document Revision History *(1)* (Part 2 of 13)

Date and Document Version	Changes Made	Summary of Changes
June 2011	■ Updated package diagram in “780-Pin FineLine Ball-Grid Array (FBGA)—Flip Chip—Dual-Piece Lid (EP3SL150)” and “780-Pin FineLine Ball-Grid Array (FBGA)—Flip Chip—Dual-Piece Lid (EP3SE110)” ■ Added Table 30 and Table 58. ■ Updated the A and A2 dimension values in “780-Pin FineLine Ball-Grid Array (FBGA)—Flip Chip—Channel Lid (EP4SGX230)” and “780-Pin FineLine Ball-Grid Array (FBGA)—Flip Chip—Channel Lid (EP4SE230)”. ■ Updated the D1 and E1 dimension values in “1152-Pin FineLine Ball-Grid Array (FBGA)—Flip Chip—Single-Piece Lid (EP4SGX290)” and “1152-Pin FineLine Ball-Grid Array (FBGA)—Flip Chip—Single-Piece Lid (EP4SGX360)”. ■ Updated Table 13. ■ Updated the b, A, and A2 dimension values in “256-Pin Ultra FineLine Ball-Grid Array (UBGA)—Wire Bond—Thin (EP3C10)”, “256-Pin Ultra FineLine Ball-Grid Array (UBGA)—Wire Bond—Thin (EP3C16)” and “256-Pin Ultra FineLine Ball-Grid Array (UBGA)—Wire Bond—Thin (EP3C25)”. ■ Updated information in “Package Outlines”. ■ Added new package diagram for “1152-Pin FineLine Ball-Grid Array (HBGA)—Flip Chip—Dual-Piece Lid (EP3SL340)”, and “780-Pin FineLine Ball-Grid Array (FBGA)—Flip Chip—Channel Lid (EP4SGX180)”. ■ Added new 1760-pin packages for 5SGXB5 and 5SGXB6 devices: “1760-Pin FineLine Ball-Grid Array (FBGA)—Flip Chip—Single-Piece Lid—A:3.40” to replace the 1932-pin packages for 5SGXB5 and 5SGXB6 devices. ■ Updated cross reference for 5SGXB5 and 5SGXB6 1517-pin package diagram in Table 3. ■ Updated table Table 33.	Updated for version 16.4

Table 60. Document Revision History *(1)* (Part 3 of 13)

Date and Document Version	Changes Made	Summary of Changes
December 2010	■ Updated document title and metadata. ■ Updated Table 43 with new thermal resistance value for EP3C16 (U484 Wire Bond package) and EP3C40 (U484 Wire Bond and F780 Wire Bond packages). ■ Updated note 3 in Table 9. ■ Updated Table 19 and Table 53 to remove dual-piece lid options for HardCopy II devices. ■ Added Arria II GZ device package listing in Table 2 and Arria II GZ thermal resistance in Table 35. ■ Added Stratix V device package listing in Table 4 and Stratix V thermal resistance in Table 37. ■ Added MAX V device package listing in Table 13 and MAX V thermal resistance in Table 46. ■ Added new Cyclone IV device package in Table 9 and thermal resistance values in Table 42. ■ Updated lead coplanarity and A3 dimension values in 358-Pin Ultra FineLine Ball-Grid Array (UBGA)—Flip Chip, 358-Pin Ultra FineLine Ball-Grid Array (UBGA)—Flip Chip—Lidless (EP2AGX45), and 358-Pin Ultra FineLine Ball-Grid Array (UBGA)—Flip Chip—Lidless (EP2AGX65). ■ Added new package diagram for 1932-Pin FineLine Ball-Grid Array (FBGA)—Flip Chip—Single-Piece Lid (EP4SGX360), 324-Pin FineLine Ball-Grid Array (FBGA)—Wire Bond (EPM2210), and 324-Pin FineLine Ball-Grid Array (FBGA)—Wire Bond (EPM2210G).	Updated for version 16.3

Table 60. Document Revision History *(1)* (Part 4 of 13)

Date and Document Version	Changes Made	Summary of Changes
September 2010	■ Updated JEDEC Outline Reference for “144-Pin Plastic Enhanced Quad Flat Pack (EQFP)—Wire Bond (EP3C10)”, “144-Pin Plastic Enhanced Quad Flat Pack (EQFP)—Wire Bond—(EP3C16)”, and “144-Pin Plastic Enhanced Quad Flat Pack (EQFP)—Wire Bond—(EP3C25)”. ■ Updated dimension value for Arria II GX devices: “572-Pin FineLine Ball-Grid Array (FBGA)—Lidless—Flip Chip (EP2AGX95)”, “780-Pin FineLine Ball-Grid Array (FBGA)—Flip Chip—Lidless (EP2AGX95)”, “1152-Pin FineLine Ball-Grid Array (FBGA)—Flip Chip—Lidless (EP2AGX95)”, “572-Pin FineLine Ball-Grid Array (FBGA)—Lidless—Flip Chip (EP2AGX65)”, “780-Pin FineLine Ball-Grid Array (FBGA)—Flip Chip—Lidless (EP2AGX65)”, “572-Pin FineLine Ball-Grid Array (FBGA)—Lidless—Flip Chip (EP2AGX45)”,“780-Pin FineLine Ball-Grid Array (FBGA)—Flip Chip—Lidless (EP2AGX45)”, “1152-Pin FineLine Ball-Grid Array (FBGA)—Flip Chip—Lidless (EP2AGX260)”, “780-Pin FineLine Ball-Grid Array (FBGA)—Flip Chip—Lidless (EP2AGX260)”, “1152-Pin FineLine Ball-Grid Array (FBGA)—Flip Chip—Lidless (EP2AGX190)”, “780-Pin FineLine Ball-Grid Array (FBGA)—Flip Chip—Lidless (EP2AGX190)”, “1152-Pin FineLine Ball-Grid Array (FBGA)—Flip Chip—Lidless (EP2AGX125)”, “780-Pin FineLine Ball-Grid Array (FBGA)—Flip Chip—Lidless (EP2AGX125)”, and “572-Pin FineLine Ball-Grid Array (FBGA)—Lidless—Flip Chip (EP2AGX125)”. ■ Updated dimension value for HardCopy devices: “1517-Pin FineLine Ball-Grid Array (FBGA)—Flip Chip—Lidless (HC4E35)”, “1152-Pin FineLine Ball-Grid Array (FBGA)—Flip Chip—Lidless (HC4E35)”, “1517-Pin FineLine Ball-Grid Array (FBGA)—Flip Chip—Lidless (HC335)”, “1152-Pin FineLine Ball-Grid Array (FBGA)—Flip Chip—Lidless (HC335)”, “780-Pin FineLine Ball-Grid Array (FBGA)—Flip Chip—Lidless (HC325)”, “484-Pin FineLine Ball-Grid Array (FBGA)—Flip Chip—Lidless (HC4E25)”, “780-Pin FineLine Ball-Grid Array (FBGA)—Flip Chip—Lidless (HC4E25)”, “780-Pin FineLine Ball-Grid Array (FBGA)—Flip Chip—Lidless (HC4GX15)”, “780-Pin FineLine Ball-Grid Array (FBGA)—Flip Chip—Lidless (HC4GX25)”, “1152-Pin FineLine Ball-Grid Array (FBGA)—Flip Chip—Lidless (HC4GX25)”, “1152-Pin FineLine Ball-Grid Array (FBGA)—Flip Chip—Lidless (HC4GX35)”, and “1517-Pin FineLine Ball-Grid Array (FBGA)—Flip Chip—Lidless (HC4GX35)”. ■ Revised the unit weight info for: “484-Pin FineLine Ball-Grid Array (FBGA), Option 1—Flip Chip”, “484-Pin FineLine Ball-Grid Array (FBGA), Option 4—Flip Chip”, “572-Pin FineLine Ball-Grid Array (FBGA)—Option 1, Flip Chip”, “572-Pin FineLine Ball-Grid Array (FBGA)—Option 2, Flip Chip”, “672-Pin FineLine Ball-Grid Array (FBGA), Option 1—Flip Chip”, “672-Pin FineLine Ball-Grid Array (FBGA), Option 4—Flip Chip”, “780-Pin FineLine Ball-Grid Array (FBGA), Option 1—Flip Chip”, “780-Pin FineLine Ball-Grid Array (FBGA), Option 3—Flip Chip”, “780-Pin FineLine Ball-Grid Array (FBGA), Option 4—Flip Chip”“1020-Pin FineLine Ball-Grid Array (FBGA), Option 1—Flip Chip”, and “1020-Pin FineLine Ball-Grid Array (FBGA), Option 2—Flip Chip”.	Updated for version 16.2

Table 60. Document Revision History *(1)* (Part 5 of 13)

Date and Document Version	Changes Made	Summary of Changes
	■ Revised the unit weight info for: “1152-Pin FineLine Ball-Grid Array (FBGA), Option 1—Flip Chip”, “1152-Pin FineLine Ball-Grid Array (FBGA), Option 2—Flip Chip”, “1152-Pin FineLine Ball-Grid Array (FBGA), Option 3—Flip Chip”, “1508-Pin FineLine Ball-Grid Array (FBGA), Option 1—Flip Chip”, “1508-Pin FineLine Ball-Grid Array (FBGA), Option 2—Flip Chip”, “1517-Pin FineLine Ball-Grid Array (FBGA), Option 1—Flip Chip”, “1517-Pin FineLine Ball-Grid Array (FBGA), Option 2—Flip Chip”, “1760-Pin FineLine Ball-Grid Array (FBGA), Option 1—Flip Chip”, “1760-Pin FineLine Ball-Grid Array (FBGA), Option 2—Flip Chip”, “1932-Pin FineLine Ball-Grid Array (FBGA), Option 1—Flip Chip”, “1932-Pin FineLine Ball-Grid Array (FBGA), Option 2—Flip Chip”, “484-Pin Hybrid FineLine Ball-Grid Array (HBGA)—Flip Chip”, “780-Pin Hybrid FineLine Ball-Grid Array (HBGA)—Flip Chip”, “1517-Pin Hybrid FineLine Ball-Grid Array (HBGA), Option 1—Flip Chip”, “1517-Pin Hybrid FineLine Ball-Grid Array (HBGA), Option 2—Flip Chip”, “1152-Pin Hybrid FineLine Ball-Grid Array (HBGA), Option 1—Flip Chip”, “1152-Pin Hybrid FineLine Ball-Grid Array (HBGA), Option 2—Flip Chip”, “1152-Pin Hybrid FineLine Ball-Grid Array (HBGA), Option 3—Flip Chip”, and “1152-Pin Hybrid FineLine Ball-Grid Array (HBGA), Option 4—Flip Chip”. ■ Added package diagram: “144-Pin Plastic Enhanced Quad Flat Pack (EQFP)—Wire Bond (EP3C10)”, “148-Pin Quad Flat No-Lead Package (QFN)—Wire Bond”, “780-Pin FineLine Ball-Grid Array (FBGA), Option 4—Flip Chip”, “1152-Pin FineLine Ball-Grid Array (FBGA), Option 3—Flip Chip”, and “572-Pin FineLine Ball-Grid Array (FBGA)—Option 2, Flip Chip”. ■ Added package diagram for Stratix IV devices: “1152-Pin FineLine Ball-Grid Array (FBGA)—Flip Chip—Single-Piece Lid (EP4SGX290)”, “780-Pin FineLine Ball-Grid Array (FBGA)—Flip Chip—Single-Piece Lid (EP4SGX110)”, “1152-Pin FineLine Ball-Grid Array (FBGA)—Flip Chip—Single-Piece Lid (EP4SGX110)”, “1152-Pin FineLine Ball-Grid Array (FBGA)—Flip Chip—Channel Lid (EP4SGX180)”,“1152-Pin FineLine Ball-Grid Array (FBGA)—Flip Chip—Single-Piece Lid (EP4SGX180)”, “1932-Pin FineLine Ball-Grid Array (FBGA)—Flip Chip—Single-Piece Lid (EP4SGX290)”, “780-Pin Hybrid FineLine Ball-Grid Array (HBGA)—Flip Chip—Channel Lid (EP4SGX360)”, “1517-Pin FineLine Ball-Grid Array (FBGA)—Flip Chip—Single-Piece Lid (EP4SGX360)”, “1760-Pin FineLine Ball-Grid Array (FBGA) — Flip Chip — Single-Piece Lid (EP4SGX360)”, “1517-Pin Hybrid FineLine Ball-Grid Array (HBGA)—Flip Chip—Dual-Piece Lid (EP4SE530)”, “1517-Pin Hybrid FineLine Ball-Grid Array (HBGA)—Flip Chip—Single-Piece Lid (EP4SE530)”, “780-Pin FineLine Ball-Grid Array (FBGA)—Flip Chip—Channel Lid (EP4SE230)”, and “1152-Pin Hybrid Ball-Grid Array (HBGA)—Flip Chip—Single-Piece Lid (EP4SE530)”.	

Table 60. Document Revision History *(1)* (Part 6 of 13)

Date and Document Version	Changes Made	Summary of Changes
	■ Added package diagram for Stratix III devices: “780-Pin FineLine Ball-Grid Array (FBGA)—Flip Chip—Dual-Piece Lid (EP3SL150)”, “780-Pin Hybrid FineLine Ball-Grid Array (HBGA)—Flip Chip—Dual-Piece Lid (EP3SL200)”,“1152-Pin FineLine Ball-Grid Array (FBGA)—Flip Chip—Dual-Piece Lid (EP3SE110)”, “780-Pin FineLine Ball-Grid Array (FBGA)—Flip Chip—Dual-Piece Lid (EP3SE110)”, “780-Pin Hybrid FineLine Ball-Grid Array (HBGA)—Flip Chip—Dual-Piece Lid (EP3SE260)”, “1152-Pin FineLine Ball-Grid Array (FBGA)—Flip Chip—Channel Lid (EP3SE260)”, and “1152-Pin FineLine Ball-Grid Array (FBGA)—Flip Chip—Dual-Piece Lid (EP3SE260)”. ■ Added package diagram for Cyclone IV devices: “780-Pin FineLine Ball-Grid Array (FBGA)—Wire Bond—OMPAC (EP4CE115)”. ■ Added package diagram for Cyclone III devices :“780-Pin FineLine Ball-Grid Array (FBGA)—Wire Bond—OMPAC (EP3C120)”, “144-Pin Plastic Enhanced Quad Flat Pack (EQFP)—Wire Bond—(EP3C16)”,“256-Pin Ultra FineLine Ball-Grid Array (UBGA)—Wire Bond—Thin (EP3C10)”, “780-Pin FineLine Ball-Grid Array (FBGA)—Wire Bond—OMPAC (EP3C55)”, “144-Pin Plastic Enhanced Quad Flat Pack (EQFP)—Wire Bond—(EP3C25)”, “256-Pin FineLine Ball-Grid Array (FBGA)—Wire Bond—Thin (EP3C10)”, “780-Pin FineLine Ball-Grid Array (FBGA)—Wire Bond—OMPAC (EP3C80)”,“484-Pin FineLine Ball-Grid Array (FBGA)—Wire Bond—OMPAC (EP3C120)”, “256-Pin FineLine Ball-Grid Array (FBGA)—Wire Bond—Thin (EP3C16)”, “256-Pin FineLine Ball-Grid Array (FBGA)—Wire Bond—Thin (EP3C25)”, “324-Pin FineLine Ball-Grid Array (FBGA)—Wire Bond (EP3C25)”, “324-Pin FineLine Ball-Grid Array (FBGA)—Wire Bond (EP3C40)”, “484-Pin FineLine Ball-Grid Array (FBGA)—Wire Bond—OMPAC (EP3C16)”, “484-Pin FineLine Ball-Grid Array (FBGA)—Wire Bond—OMPAC (EP3C40)”, “484-Pin FineLine Ball-Grid Array (FBGA)—Wire Bond—OMPAC (EP3C55)”, “484-Pin FineLine Ball-Grid Array (FBGA)—Wire Bond—OMPAC (EP3C80)”, “484-Pin Ultra FineLine Ball-Grid Array (UBGA)—Wire Bond (EP3CLS100)”, “256-Pin Ultra FineLine Ball-Grid Array (UBGA)—Wire Bond—Thin (EP3C16)”, “484-Pin Ultra FineLine Ball-Grid Array (UBGA)—Wire Bond (EP3C16)”, “256-Pin Ultra FineLine Ball-Grid Array (UBGA)—Wire Bond—Thin (EP3C25)”, “484-Pin Ultra FineLine Ball-Grid Array (UBGA)—Wire Bond (EP3C55)”, and “484-Pin Ultra FineLine Ball-Grid Array (UBGA)—Wire Bond (EP3C80)”. ■ Added package diagram for MAX II devices: “100-Pin FineLine Ball-Grid Array (FBGA)—Wire Bond—Thin (EPM240)”, “100-Pin FineLine Ball-Grid Array (FBGA)—Wire Bond—Thin (EPM570)”. ■ Updated A3 dimension for “572-Pin FineLine Ball-Grid Array (FBGA)—Lidless—Flip Chip (EP2AGX45)”, “572-Pin FineLine Ball-Grid Array (FBGA)—Lidless—Flip Chip (EP2AGX65)”, “780-Pin FineLine Ball-Grid Array (FBGA)—Flip Chip—Lidless (EP2AGX45)”, and “780-Pin FineLine Ball-Grid Array (FBGA)—Flip Chip—Lidless (EP2AGX65)”.	

Table 60. Document Revision History *(1)* (Part 7 of 13)

Date and Document Version	Changes Made	Summary of Changes
	■ Added package diagram for HardCopy III devices: “484-Pin FineLine Ball-Grid Array (FBGA)—Flip Chip—Single-Piece Lid (HC325)” and “484-Pin FineLine Ball-Grid Array (FBGA)—Flip Chip—Lidless (HC325)”. ■ Updated D1/E1 values in “1517-Pin FineLine Ball-Grid Array (FBGA)—Flip Chip—Single-Piece Lid (EP4S40G2)”, “1517-Pin FineLine Ball-Grid Array (FBGA)—Flip Chip—Single-Piece Lid (EP4S100G2)”, “1517-Pin FineLine Ball-Grid Array (FBGA)—Flip Chip—Single-Piece Lid (EP4SGX180)”, “1517-Pin FineLine Ball-Grid Array (FBGA)—Flip Chip—Single-Piece Lid (EP4SGX230)”, “484-Pin FineLine Ball-Grid Array (FBGA)—Flip Chip—Lidless (HC4E25)”, “780-Pin FineLine Ball-Grid Array (FBGA)—Flip Chip—Lidless (HC4E25)”, and “1020-Pin FineLine Ball-Grid Array (FBGA), Option 2—Flip Chip”. ■ Updated Table 7. ■ Updated Table 10 footnote. ■ Updated thermal resistance values of EP3CLS70, EP3CLS100, EP3CLS150, and EP3CLS200 devices F484 pin package in Table 42. ■ Updated package diagram in “1152-Pin FineLine Ball-Grid Array (FBGA)—Flip Chip—Single-Piece Lid (EP4SGX360)” ■ Updated the notes in “256-Pin FineLine Ball-Grid Array (FBGA), Option 1—Wire Bond” and “256-Pin FineLine Ball-Grid Array (FBGA), Option 2—Thin—Wire Bond” to include Cyclone IV devices. ■ Updated EP4SE230 device package to Channel Lid from Dual-Piece Lid in Table 4. ■ Updated package diagram in “1517-Pin FineLine Ball-Grid Array (FBGA)—Flip Chip—Dual-Piece Lid (EP4SGX180)”. ■ Updated EP1AGX50 and EP1AGX60 F484 pin package description from dual-piece lid to channel lid in Table 3. ■ Updated EP4SGX180 and EP4SGX230 device package description in Table 4. ■ Added note 1 to Table 6. ■ Deleted HC315WF484 from Table 18. ■ Added additional information to “148-Pin Quad Flat No-Lead Package (QFN)—Wire Bond—(EP4CGX15)” and “148-Pin Quad Flat No-Lead Package (QFN)—Wire Bond”	

Table 60. Document Revision History *(1)* (Part 8 of 13)

Date and Document Version	Changes Made	Summary of Changes
April 2010	■ Added Table 1 and Table 38 ■ Updated Table 2 through Table 37 ■ Updated values in Table 49, Table 50, Table 58 ■ Removed 148-pin Quad Flat No-Lead Package (QFN)—Wire Bond, 484-Pin FBGA, Flip Chip, Dual-Piece Lid (EP2S15), 484-Pin FBGA, Flip Chip, Single-Piece Lid (EP2S15), 672-Pin FBGA, Flip Chip, Dual-Piece Lid (EP2S15), 672-Pin FBGA, Flip Chip, Single-Piece Lid (EP2S15) package outlines. ■ Corrected title in 1152-Pin FineLine Ball-Grid Array (FBGA)—Flip Chip—Single-Piece Lid (HC4E35) ■ Added 148-Pin Quad Flat No-Lead Package (QFN)—Wire Bond—(EP4CGX15) ■ Added 1517-Pin FineLine Ball-Grid Array (FBGA)—Flip Chip—Single-Piece Lid (EP4S40G2), 1517-Pin FineLine Ball-Grid Array (FBGA)—Flip Chip—Single-Piece Lid (EP4S100G2), 1517-Pin Hybrid FineLine Ball-Grid Array (HBGA)—Flip Chip—Single-Piece Lid (EP4S40G5), and 1932-Pin FineLine Ball-Grid Array (FBGA)—Flip Chip—Single-Piece Lid (EP4S100G4) ■ Added 1152-Pin Hybrid Ball-Grid Array (HBGA)—Flip Chip—Single-Piece Lid (EP4SE820), 1517-Pin Hybrid Ball-Grid Array (HBGA)—Flip Chip—Single-Piece Lid (EP4SE820), and 1760-Pin FineLine Ball-Grid Array (FBGA)—Flip Chip—Single-Piece Lid (EP4SE820) ■ Added 1517-Pin FineLine Ball-Grid Array (FBGA)—Flip Chip—Single-Piece Lid (EP4SGX180) and 1517-Pin FineLine Ball-Grid Array (FBGA)—Flip Chip—Dual-Piece Lid (EP4SGX180) ■ Added 1517-Pin FineLine Ball-Grid Array (FBGA)—Flip Chip—Dual-Piece Lid (EP4SGX230) ■ Added “484-Pin FineLine Ball-Grid Array (FBGA)—Flip Chip—Lidless (HC4E25)”, “484-Pin FineLine Ball-Grid Array (FBGA)—Flip Chip—Single-Piece Lid (HC4E25)”, and “780-Pin FineLine Ball-Grid Array (FBGA)—Flip Chip—Lidless (HC4E25)” ■ Added “780-Pin FineLine Ball-Grid Array (FBGA)—Flip Chip—Lidless (HC4GX15)”, and “780-Pin FineLine Ball-Grid Array (FBGA)—Flip Chip—Single-Piece Lid (HC4GX15)” ■ Added “780-Pin FineLine Ball-Grid Array (FBGA)—Flip Chip—Lidless (HC4GX25)”, “780-Pin FineLine Ball-Grid Array (FBGA)—Flip Chip—Single-Piece Lid (HC4GX25)”, “1152-Pin FineLine Ball-Grid Array (FBGA)—Flip Chip—Lidless (HC4GX25)”, and “1152-Pin FineLine Ball-Grid Array (FBGA)—Flip Chip—Single-Piece Lid (HC4GX25)”	Updated for version 16.1

Table 60. Document Revision History *(1)* (Part 9 of 13)

Date and Document Version	Changes Made	Summary of Changes
	■ Added "1152-Pin FineLine Ball-Grid Array (FBGA)—Flip Chip—Single-Piece Lid (HC4GX35)", "1517-Pin FineLine Ball-Grid Array (FBGA)—Flip Chip—Lidless (HC4GX35)", and "1517-Pin FineLine Ball-Grid Array (FBGA)—Flip Chip—Single-Piece Lid (HC4GX35)" ■ Updated 1517-Pin FineLine Ball-Grid Array (FBGA)—Flip Chip—Single-Piece Lid (EP4SGX230) ■ Corrected title for 324-Pin FineLine Ball-Grid Array (FBGA)—Wire Bond—Option 1 from 324-Pin FineLine Ball-Grid Array (FBGA) ■ Corrected title for 1517-Pin Hybrid FineLine Ball-Grid Array (HBGA) — Flip Chip — Single-Piece Lid (EP4SE820) from 1517-Pin Hybrid FineLine Ball-Grid Array (HBGA)—Flip Chip—Single-Piece Lid (EP4SGX820) ■ Corrected weight in 324-Pin FBGA Data Sheet ■ Added thermal resistance disclaimer at the beginning of the Thermal Resistance section ■ Moved EPC1, EPC2, EPC1441 entries from Table 27 to Table 37	
December 2009	■ Added notes for preliminary thermal information (Table 36, Table 37, Table 46, and Table 47)	Updated for version 16.0

Table 60. Document Revision History *(1)* (Part 10 of 13)

Date and Document Version	Changes Made	Summary of Changes
November 2009	■ Added Cyclone IV information ■ Added notes to 1152-Pin HBGA Option 3 Data Sheet ■ Corrected drawings for 358-Pin UBGA—Lidless (EP2AGX45), 358-Pin UBGA—Lidless (EP2AGX65), and 1152-Pin FBGA—Lidless (EP2AGX95) Data Sheets ■ Added 148-Pin QFN, 169-Pin FBGA, and 324-Pin FBGA Option 2 Data Sheets ■ Added 1517-Pin—Lidless (HC4E35) and 1517-Pin Single-Piece Lid (HC4E35) Data Sheets ■ Added 780-pin FBGA—Channel Lid (EP4SGX230), 780-Pin HBGA—Channel Lid (EP4SGX 360), 1152-Pin FBGA—Channel Lid (EP4SGX230), 1152-Pin FBGA—Channel Lid (EP4SGX360), 1152-Pin FBGA—Dual-Piece Lid (EP4SGX230), 1152-Pin FBGA—Single-Piece Lid (EP4SGX230), 1152-Pin FBGA—Single-Piece Lid (EP4SGX360), 1152-Pin HBGA—Single-Piece Lid (EP4SGX530), 1152-Pin HBGA—Single-Piece Lid (EP4SGX820), 1517-Pin FBGA—Dual-Piece Lid (EP4SGX230), 1517-Pin FBGA—Single-Piece Lid (EP4SGX230), 1517-Pin FBGA—Single-Piece Lid (EP4SGX360), 1517-Pin HBGA—Dual-Piece Lid (EP4SGX530), 1517-Pin HBGA—Single-Piece Lid (EP4SGX530), 1517-Pin HBGA—Single-Piece Lid (EP4S40G2 and EP4S100G2), 1517-Pin HBGA—Single-Piece Lid (EP4S100G5), 1517-Pin HBGA—Single-Piece Lid (EP4SGX820), 1760-Pin FBGA—Dual-Piece Lid (EP4SGX530), 1760-Pin FBGA—Single-Piece Lid (EP4SGX360), 1760-Pin FBGA—Single-Piece Lid (EP4SGX820), 1932-Pin FBGA—Dual-Piece Lid (EP4SGX530), 1932-Pin FBGA—Single-Piece Lid (EP4SGX530), 1932-Pin FBGA—Single-Piece Lid (EP4S100G2) Data Sheets ■ Added 484-Pin FBGA—Dual-Piece Lid (EP2S15), 484-Pin FBGA—Single-Piece Lid (EP2S15), 672-Pin FBGA—Dual-Piece Lid (EP2S15), 672-Pin FBGA—Single-Piece Lid (EP2S15), 164-Pin MBGA (EP3C16), and 484-Pin UBGA (EP3C40) Data Sheets	Updated for version 15.9

Table 60. Document Revision History *(1)* (Part 11 of 13)

Date and Document Version	Changes Made	Summary of Changes
October 2009	■ Added 1152-Pin HBGA Option 3, 1152-Pin HBGA Option 4, 1517-Pin HBGA Option 2, 1760-Pin FBGA Option 2, and 1932-Pin FBGA Option 2 Data Sheets ■ Added 358-Pin UBGA—Lidless (EP2AGX45), 358-Pin UBGA—Lidless (EP2AGX65), 572-Pin FBGA—Lidless (EP2AGX45), 572-Pin FBGA—Lidless (EP2AGX65), 572-Pin FBGA—Lidless (EP2AGX95), 572-Pin FBGA—Lidless (EP2AGX125), 780-Pin FBGA—Lidless (EP2AGX45), 780-Pin FBGA—Lidless (EP2AGX65), 780-Pin FBGA—Lidless (EP2AGX95), 780-Pin FBGA—Lidless (EP2AGX125), 780-Pin FBGA—Lidless (EP2AGX190), 780-Pin FBGA—Lidless (EP2AGX260), 1152-Pin FBGA—Lidless (EP2AGX95), 1152-Pin FBGA—Lidless (EP2AGX125), 1152-Pin FBGA—Lidless (EP2AGX190), and 1152-Pin FBGA—Lidless (EP2AGX260) Data Sheets ■ Added 780-Pin FBGA—Lidless (HC325), 780-Pin FBGA—Single-Piece Lid (HC325), 1152-Pin FBGA—Lidless (HC335), 1152-Pin FBGA—Single-Piece Lid (HC335), 1152-Pin FBGA—Lidless (HC4E35), 1152-Pin FBGA—Single-Piece Lid (HC4E35), 1517-Pin FBGA—Lidless (HC335), and 1517-Pin FBGA—Single-Piece Lid (HC335) Data Sheets ■ Removed EP2AGX20 and EP2AGX30 entries from Table 2 and Table 39 ■ Added EP4SE820 entries to Table 41 ■ Added Stratix IV GT devices to Table 4; added option references ■ Updated thermal resistance values in Table 39	Updated for version 15.8
June 2009	■ Made three corrections to Stratix III thermal resistance table ■ Added Cyclone III LS information ■ Added Stratix IV GT thermal resistance values ■ Added and/or HardCopy III and IV cross-reference and thermal resistance tables ■ Updated HardCopy III and IV part numbers ■ Added Cyclone III M164 package information ■ Added 484-Pin FBGA Option 4, 672-Pin FBGA Option 4, 1020-Pin FBGA Option 2, 1508-Pin FBGA Option 2, and 1517-Pin Option 2 FBGA Data Sheets ■ Revised 1508-Pin FBGA Option 1, 1020-Pin FBGA Option 1, 1517-Pin FBGA Option 1, 572-Pin FBGA, and 1152-Pin FBGA Option 2 Data Sheets ■ Added 956-Pin BGA Option 2 Data Sheet	Updated for version 15.7
March 2009	■ Corrected “b Nom.” value in 358-Pin UBGA Data Sheet ■ Corrected “A Max.” value and replaced package drawing in 780-Pin FBGA - Option 3 Data Sheet ■ Corrected “A Max.” value in 256-Pin UBGA Data Sheet ■ Modified thermal resistance values for EP3SL200 device in Stratix III thermal resistance table	Updated for version 15.6

Table 60. Document Revision History *(1)* (Part 12 of 13)

Date and Document Version	Changes Made	Summary of Changes
March 2009	■ Fixed theta symbols in several data sheet Dimension Tables ■ Updated dimensions in 256-Pin UBGA Data Sheet ■ Added 358-Pin UBGA Data Sheet, 572-Pin, 780-Pin Option 3, and 1152-Pin Option 2 FBGA Data Sheets ■ Added Arria II GX thermal resistance table ■ Added Arria II GX device and package cross-reference table ■ Added EP3SL50, EP3SE80, and EP3SL110 devices to Stratix III thermal resistance table ■ Added EP4SGX70, EP4SGX180, and EP4SGX290 devices and updated Stratix IV GX thermal resistance table ■ Added HardCopy III and HardCopy IV thermal resistance table ■ Miscellaneous formatting changes	Updated for version 15.5
December 2008	■ Changed dimension “A” Max. value in 1932-Pin FBGA Data Sheet	Updated for version 15.4
November 2008	■ Moved Revision History to the end and added “How to Contact Altera” section ■ Added subheadings in Thermal Resistance section ■ Converted to 8-1/2 x 11 page size ■ Changed “Maximum Lead Coplanarity” to “Lead Coplanarity” and added “(Typ.)” to weights for all packages ■ Added EP2C15 information to Cyclone II tables	Updated for version 15.3
September 2008	■ Added thermal resistance values for Stratix IV ■ Added new 1152-Pin HBGA Option 2 (42.5 MM SQ.) Data Sheet ■ Added new 1517-Pin HBGA (42.5 MM SQ.) Data Sheet ■ Added theta-JB thermal resistance values for Stratix II ■ Added HardCopy II thermal resistance values ■ Revised weights for 256-Pin BGA Option 2, 652-Pin BGA Option 2, 652-Pin BGA Option 3, 208-Pin RQFP, 240-Pin RQFP, and 304-Pin RQFP Data Sheets ■ Added notes to 1152-Pin FBGA, 1517-Pin FBGA, 1760-Pin FBGA; changed dimension “A” thickness and “A2” thickness in 1932-Pin FBGA Data Sheet	Updated for version 15.2
May 2008	■ Added 1932-Pin FBGA Data Sheet ■ Added Device and Package Cross Reference table for Stratix IV	Updated for version 15.1
April 2008	■ Revised Maximum Lead Coplanarity values for 1517-Pin FBGA and 1760-Pin FBGA Data Sheets ■ Added three entries to Table 3 ■ Corrected minor typos in Table 4 and Table 10 ■ Corrected HC210W package in Table 12 ■ Many tables updated for formatting consistency	Updated for version 15.0

Table 60. Document Revision History *(1)* (Part 13 of 13)

Date and Document Version	Changes Made	Summary of Changes
February 2008	■ Added 164-Pin MBGA information in Table 8 ■ Added HardCopy II device information in Table 12 ■ Updated Stratix III thermal resistance values in Table 22 ■ Added 164-Pin MBGA Data Sheet ■ Corrected 8-Pin SOIC Data Sheet (changed “B” to “b” in Package Outline Dimension Table) ■ Corrected 68-Pin MBGA Data Sheet (changed “Inches” to “Millimeters” in Package Outline Dimension Table)	Updated for version 14.9
October 2007	■ Removed note from 100-Pin PQFP Option 1 Data Sheet ■ Removed 100-Pin PQFP Option 2 Data Sheet ■ Updated 88-Pin UBGA, 144-Pin EQFP, 256-Pin FBGA Option 1, 256-Pin FBGA Option 2, 256-Pin UBGA, 1517-Pin FBGA, and 1760-Pin FBGA Data Sheets ■ Added 780-Pin HBGA and 1152-Pin HBGA Data Sheets	Updated for version 14.8
May 2007 v14.7	■ Added Arria™ GX information ■ Added Cyclone III tables ■ Revised D2 and E2 dimensions for 144-Pin EQFP ■ Revised 100-Pin MBGA - Wire Bond and 256-Pin MBGA - Wire Bond ■ Added 780-Pin FBGA option 2 - Wire Bond, 256-Pin UBGA - Wire Bond, 68-Pin MBGA - Wire Bond, and 144-Pin MBGA - Wire Bond	Changes and additions as described in “Changes Made” section
February 2007 v14.6	■ Updated 144-Pin Plastic Thin Quad Flat Pack (TQFP) Data Sheet to correct title and ordering code reference ■ Added revision history	Revised one data sheet (144-Pin Plastic Thin Quad Flat Pack (TQFP) Data Sheet), added revision history
December 2006 v14.5	■ Table 2 was added for Stratix III Device and Package Cross-Reference ■ Tables 16, 17, and 18 were added for Stratix III Thermal Resistance information ■ 1517-Pin FineLine Ball-Grid Array (FBGA) - Flip Chip data sheet was added ■ 1760-Pin FineLine Ball-Grid Array (FBGA) - Flip Chip data sheet was added ■ "Wire Bond" and "Flip Chip" was added to title of each data sheet, as appropriate ■ "BGA" was spelled out as "Ball-Grid Array" in all titles ■ Some package outline drawings were reformatted ■ Weights were updated for many packages	Added Tables for Stratix III, updated other data sheets

Note to Table 60:

(1) Formal revision history for this document began with version 14.5.

How to Contact Altera

For the most up-to-date information about Altera® products, see the following table.

Contact *(Note 1)*	Contact Method	Address
Technical support	Website	www.altera.com/support
Technical training	Website	www.altera.com/training
	Email	custrain@altera.com
Altera literature services	Email	literature@altera.com
Non-technical support (General)	Email	nacomp@altera.com
(Software Licensing)	Email	authorization@altera.com

Note:

(1) You can also contact your local Altera sales office or sales representative.

101 Innovation Drive
San Jose, CA 95134
www.altera.com
Technical Support
www.altera.com/support

Copyright © December 2011. Altera Corporation. All rights reserved. Altera, The Programmable Solutions Company, the stylized Altera logo, specific device designations, and all other words and logos that are identified as trademarks and/or service marks are, unless noted otherwise, the trademarks and service marks of Altera Corporation in the U.S. and other countries. All other product or service names are the property of their respective holders. Altera products are protected under numerous U.S. and foreign patents and pending applications, maskwork rights, and copyrights. Altera warrants performance of its semiconductor products to current specifications in accordance with Altera's standard warranty, but reserves the right to make changes to any products and services at any time without notice. Altera assumes no responsibility or liability arising out of the application or use of any information, product, or service described herein except as expressly agreed to in writing by Altera Corporation. Altera customers are advised to obtain the latest version of device specifications before relying on any published information and before placing orders for products or services.

I.S. EN ISO 9001