THIS DRAWING IS UNPUBLISHED. RELEASED FOR PUBLICATION -,- .
© COPYRIGHT - By - ALL RIGHTS RESERVED.

LOC	DIST
AF	50

REVISIONS

P	LTR	DESCRIPTION	DATE	DWN	APVD
	AM3	REVISED PER ECO-11-004587	11MAR11	RK	HMR

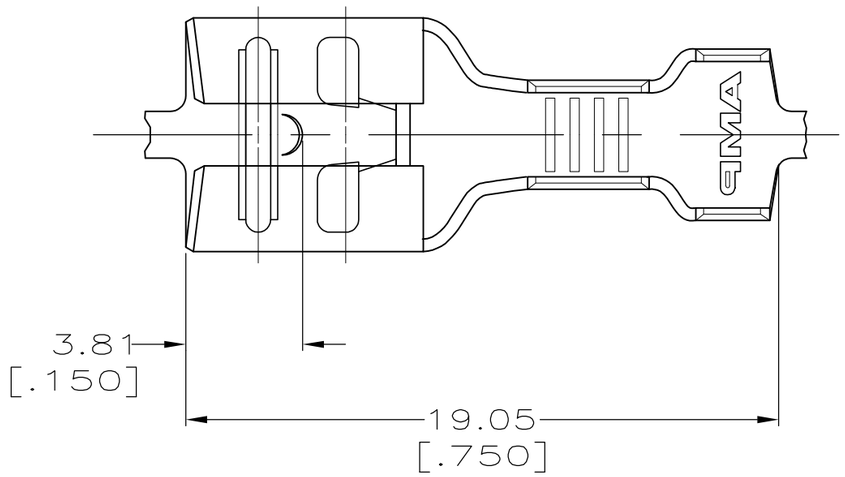

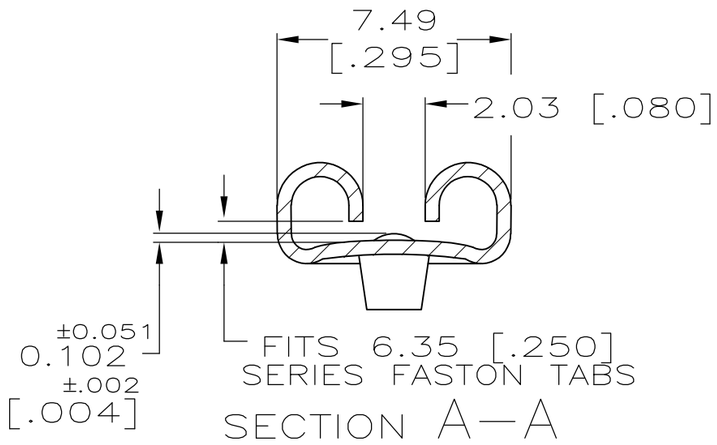

1 CONTINUOUS STRIP ON REELS.

2 PREPRODUCTION — FASR REQ.

3 MATING TAB THK TO BE 0.81±0.025 [.032±.001].

4 REDUCED PACKAGE QUANTITY

5 PRELIMINARY — NOT FOR PRODUCTION

6 OBSOLETE PARTS: OBSOLETE CIS STREAMLINING PER D.RENAUD/D.SINISI

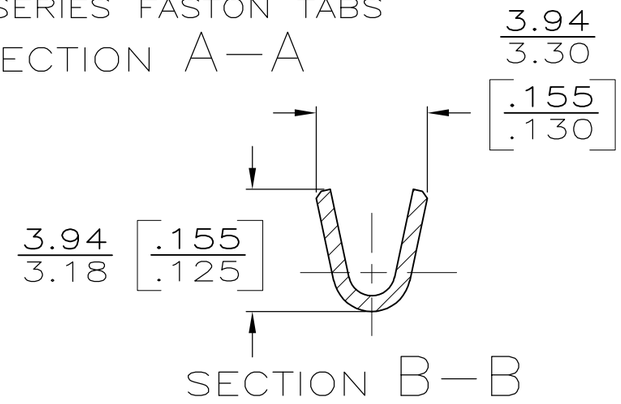

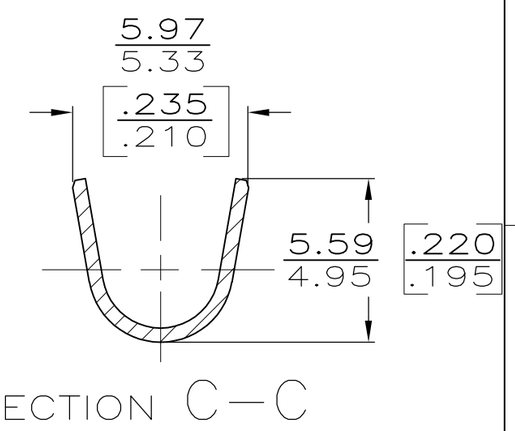

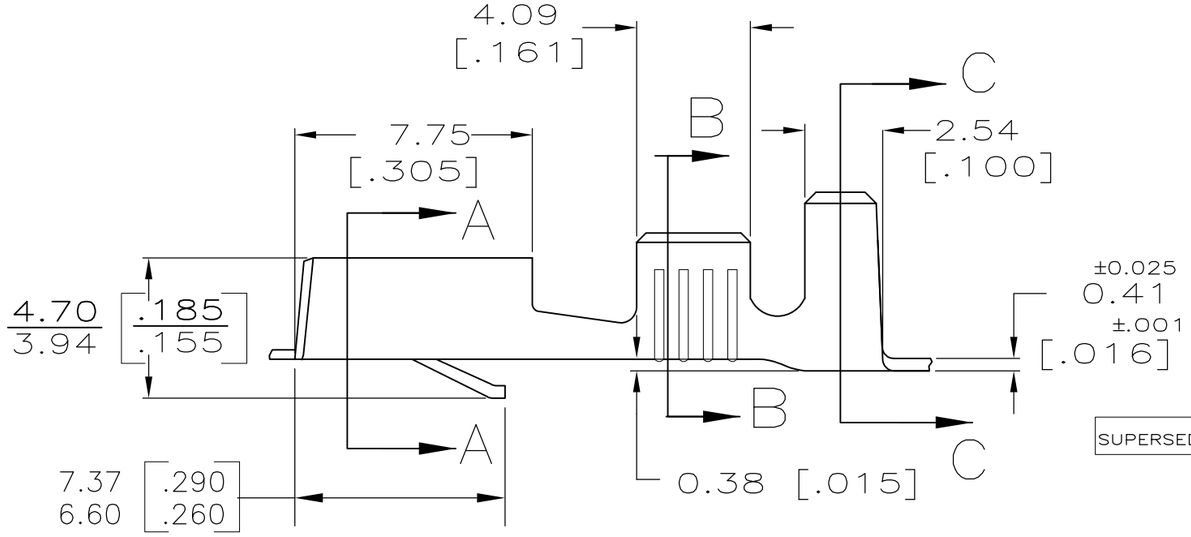

	INSULATION RANGE	WIRE SIZE	FINISH	MATERIAL	PART NO.
			TIN	H04 BRASS	4 5 42281-8
SUPERSEDED			~~TIN~~	~~H03 PHOS BRZ~~	~~42281-7~~
			SILVER	H03 PHOS BRZ	2 6 ~~42281-6~~
	2.54 - 4.32 [.100-.170]	0.8-2.0mm² [18-14]	~~—~~	~~H03 PHOS BRZ~~	~~42281-5~~
SUPERSEDED BY 42281-2			~~SILVER~~	~~H04 BRASS~~	~~42281-3~~
			TIN	H04 BRASS	42281-2
			—	H04 BRASS	42281-1

0	4.57 [.180]	5.59 [.220]	F	2.79 [.110]	1.40 [.055]	[#18]
					1.55 [.061]	[#16]
					1.78 [.070]	[#14]
TYPE	WIDTH	±0.38 [±.015] STRIP LENGTH	TYPE	WIDTH	±0.51 [.002] HEIGHT	WIRE
INSUL BARREL CRIMP		WIRE BARREL CRIMP				

THIS DRAWING IS A CONTROLLED DOCUMENT.

DIMENSIONS: MM [INCHES]

TOLERANCES UNLESS OTHERWISE SPECIFIED:

0 PLC	± –
1 PLC	± –
2 PLC	± 0.25 [.010]
3 PLC	± –
4 PLC	± –
ANGLES	± –

MATERIAL: SEE TABLE

FINISH: SEE TABLE

DWN	JR RUTH	9/17/90
CHK	MS FEHER	9/17/90
APVD	RON KUZO	9/17/90
PRODUCT SPEC	—	
APPLICATION SPEC	114-2025	
WEIGHT	—	

TE Connectivity

NAME: RECEPTACLE, FASTIN-FASTON, 6.35 [.250] SERIES —

SIZE	CAGE CODE	DRAWING NO	RESTRICTED TO
A3	00779	C-42281	—

CUSTOMER DRAWING | SCALE 5:1 | SHEET 1 OF 1 | REV AM3