- **Features：**

  1. Compact dual-in-line Package.
  2. 400V peak blocking voltage.
  3. Isolation voltage between input and output 2500Vrms.

- **Application：**

  1. TRIAC Driver.
  2. Programmable Controllers.
  3. AC-Output Module.
  4. Solid State Relay.

- **Outside Dimension：Unit (mm)**

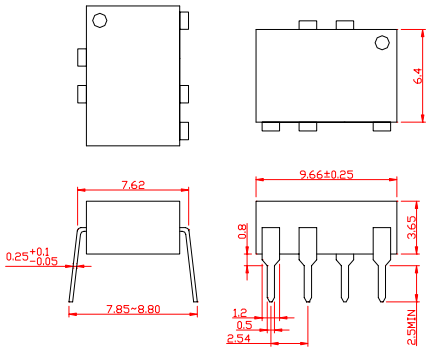

- **Schematic：Top View**

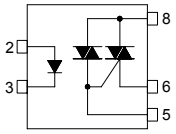

2：Anode
3：Cathode
5：TRIAC Gate
6：TRIAC T1
8：TRIAC T2

- **Absolute Maximum Ratings：(Ta=25℃)**

	CHARACTERISTIC		SYMBOL	RATING	UNIT
Input	Forward Current		I_F	50	mA
	Forward Current Derating (Ta≧53℃)		ΔI_F/℃	-0.7	mA/℃
	Peak Forward Current (100 μs pulse, 100pps)		I_{FP}	1	A
	Reverse Voltage		V_R	5	V
	Junction Temperature		Tj	125	℃
Output	Off-State Output Terminal Voltage		V_{DRM}	400	V
	On-State RMS Current	Ta=40℃	$I_{T(RMS)}$	0.5	A
		Ta=60℃		0.35	
	On-State Current Derating (Ta≧40℃)		ΔI_T/℃	-7.2	mA/℃
	Peak Current from Snubber Circuit (100 μ pulse, 120pps)		I_{SP}	2	A
	Peak Nonrepetitive Surge Current (50Hz, Peak)		I_{TSM}	5	A
	Junction Temperature		Tj	110	℃
Storage Temperature Range			T_{stg}	-40~125	℃
Operating Temperature Range			T_{opr}	-20~80	℃
Lead Soldering Temperature (10s)			T_{sol}	260	℃
Isolation Voltage (AC, 1min., R.H.≦60%)			BV_S	2500	Vrms

- **Electro-optical characteristics：**

	CHARACTERISTIC	SYMBOL	TEST CONDITION	MIN.	TYP.	MAX.	UNIT
Input	Forward Voltage	V_F	I_F=10mA	1.0	1.15	1.3	V
	Reverse Current	I_R	V_R=5V	-	-	10	μA
	Capacitance	C_T	V=0, f=1MHz	-	30	-	pF
Output	Peak Off-State Current	I_{DRM}	V_{DRM}=400V, Ta=110℃	-	-	100	μA
	Peak On-State Voltage	V_{TM}	I_{TM}=0.75A	-	-	3.0	V
	Holding Current	I_H	R_L=100Ω	-	-	25	mA
	Critical Rate of Rise of Off-State Voltage	dv/dt	Vin=120Vrms	200	500	-	V/μs
	Critical Rate of Rise of Commutating Voltage	dv/dt(c)	Vin=120Vrms, I_T=0.5Arms	-	5	-	V/μs
Transfer	Trigger LED Current	I_{FT}	V_T=6V	-	-	10	mA
	Capacitance (Input to Output)	C_S	V_S=0, f=1MHz	-	1.5	-	pF
	Isolation Resistance	R_S	V_S=500V	$5X10^{10}$	10^{14}	-	Ω
	Isolation Voltage	BV_S	AC, 1minute	2500	-	-	Vrms
			AC, 1second, in oil	-	5000	-	
			DC, 1minute, in oil	-	5000	-	Vdc