molex
one company › a world of innovation

This document was generated on 05/26/2010

PLEASE CHECK WWW.MOLEX.COM FOR LATEST PART INFORMATION

Part Number: 0901301344

Status: Active

Overview: cgrid_iii

Description: 2.54mm (.100") Pitch C-Grid III™ Header, Dual Row, Vertical, Shrouded, Fully Loaded, 44 Circuits, Black, 0.76µm (30µ") Gold (Au) Selective Plating

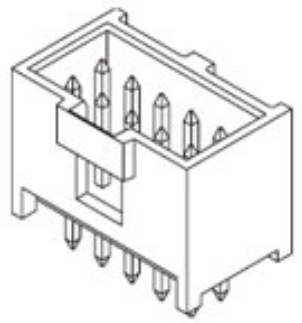

Series

image - Reference only

Documents:

3D Model
Drawing (PDF)
Product Specification PS-99020-0001 (PDF)
RoHS Certificate of Compliance (PDF)

General

Product Family	PCB Headers
Series	90130
Application	Wire-to-Board
Overview	cgrid_iii
Product Name	C-Grid III™

Physical

Breakaway	No
Circuits (Loaded)	44
Circuits (maximum)	44
Color - Resin	Black
Durability (mating cycles max)	200
First Mate / Last Break	No
Glow-Wire Compliant	No
Guide to Mating Part	No
Keying to Mating Part	None
Lock to Mating Part	Yes
Material - Metal	Brass
Material - Plating Mating	Gold
Material - Plating Termination	Tin
Material - Resin	Polyester
Number of Rows	2
Orientation	Vertical
PC Tail Length (in)	0.114 In
PC Tail Length (mm)	2.90 mm
PCB Locator	No
PCB Retention	None
PCB Thickness Recommended (in)	0.063 In
PCB Thickness Recommended (mm)	1.60 mm
Packaging Type	Tray
Pitch - Mating Interface (in)	0.100 In
Pitch - Mating Interface (mm)	2.54 mm
Pitch - Term. Interface (in)	0.100 In
Pitch - Term. Interface (mm)	2.54 mm
Plating min: Mating (µin)	30.48
Plating min: Mating (µm)	0.762
Plating min: Termination (µin)	120
Plating min: Termination (µm)	3
Polarized to Mating Part	Yes
Polarized to PCB	No
Shrouded	Closed Ends
Stackable	No
Surface Mount Compatible (SMC)	No
Temperature Range - Operating	-55°C to +125°C
Termination Interface: Style	Through Hole

EU RoHS
ELV and RoHS Compliant
REACH SVHC
Contains SVHC: No
Halogen-Free Status
Not Reviewed

China RoHS

Need more information on product environmental compliance?

Email productcompliance@molex.com
For a multiple part number RoHS Certificate of Compliance, click here

Please visit the Contact Us section for any non-product compliance questions.

Search Parts in this Series
90130Series

Mates With
90142 C-Grid III™ Crimp Housing

Electrical

Current - Maximum per Contact	3A
Voltage - Maximum	350V AC/DC

Solder Process Data

Duration at Max. Process Temperature (seconds)	5
Lead-free Process Capability	Wave Capable (TH only)
Max. Cycles at Max. Process Temperature	1
Process Temperature max. C	260

Material Info

Reference - Drawing Numbers

Packaging Specification	PK-90130-001, PK-91814-005
Product Specification	PS-99020-0001
Sales Drawing	SDA-90130

This document was generated on 05/26/2010

PLEASE CHECK WWW.MOLEX.COM FOR LATEST PART INFORMATION

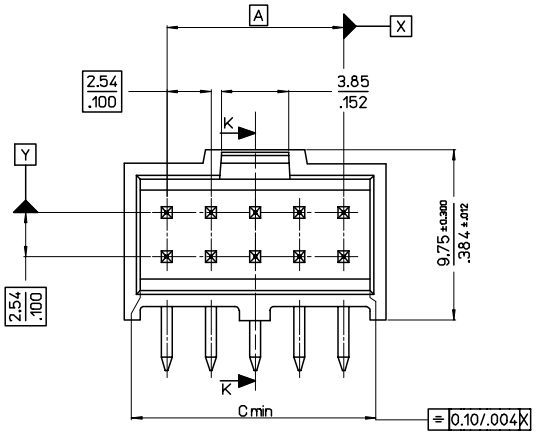

VERSION FULLY LOADED

HSG CKT SIZE	A	B	C
6	(5.08) .200	(10.34) .407	(7.92) .312
8	(7.62) .300	(12.88) .507	(10.46) .412
10	(10.16) .400	(15.42) .607	(13.00) .512
12	(12.70) .500	(17.96) .707	(15.54) .612
14	(15.24) .600	(20.50) .807	(18.08) .712
16	(17.78) .700	(23.04) .907	(20.62) .812
18	(20.32) .800	(25.58) 1.007	(23.16) .912
20	(22.86) .900	(28.12) 1.107	(25.70) 1.012
22	(25.40) 1.000	(30.66) 1.207	(28.24) 1.112
24	(27.94) 1.100	(33.20) 1.307	(30.78) 1.212
26	(30.48) 1.200	(35.74) 1.407	(33.32) 1.312
28	(33.02)/1.300	(37.90)/1.492	(36.06)/1.420
30	(35.56) 1.400	(40.82) 1.607	(38.40) 1.512
32	(38.10)/1.500	(42.98)/1.692	(41.15)/1.620
34	(40.64) 1.600	(45.90) 1.807	(43.48) 1.712
36	(43.18)/1.700	(48.06)/1.892	(46.22)/1.820
38	(45.72) 1.800	(50.98) 2.007	(48.56) 1.912
40	(48.26) 1.900	(53.52) 2.107	(51.10) 2.012
42	(50.80)/2.000	(55.68)/2.192	(53.84)/2.120
44	(53.34) 2.100	(58.60) 2.307	(56.18) 2.212
46	(55.88)/2.200	(60.76)/2.392	(58.92)/2.320
48	(58.42)/2.300	(63.30)/2.492	(61.46)/2.420
50	(60.96) 2.400	(66.22) 2.607	(63.80) 2.512
52	(63.50)/2.500	(68.38)/2.692	(66.54)/2.620
54	(66.04) 2.600	(71.30) 2.807	(68.88) 2.712
56	(68.58)/2.700	(73.46)/2.892	(71.62)/2.820
58	(71.12)/2.800	(76.00)/2.992	(74.16)/2.920
60	(73.66) 2.900	(78.92) 3.107	(76.50) 3.012
62	(76.20)/3.000	(81.08)/3.192	(79.24)/3.120
64	(78.74) 3.100	(84.00) 3.307	(81.58) 3.212
66	(81.28)/3.200	(86.16)/3.392	(84.32)/3.320
68	(83.82) 3.300	(89.08) 3.507	(86.66) 3.412

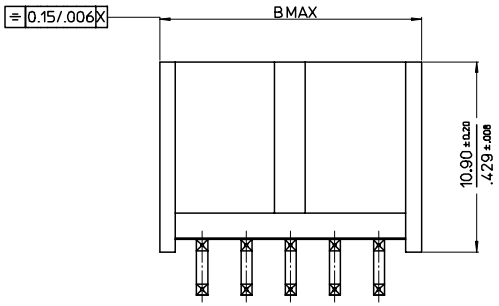

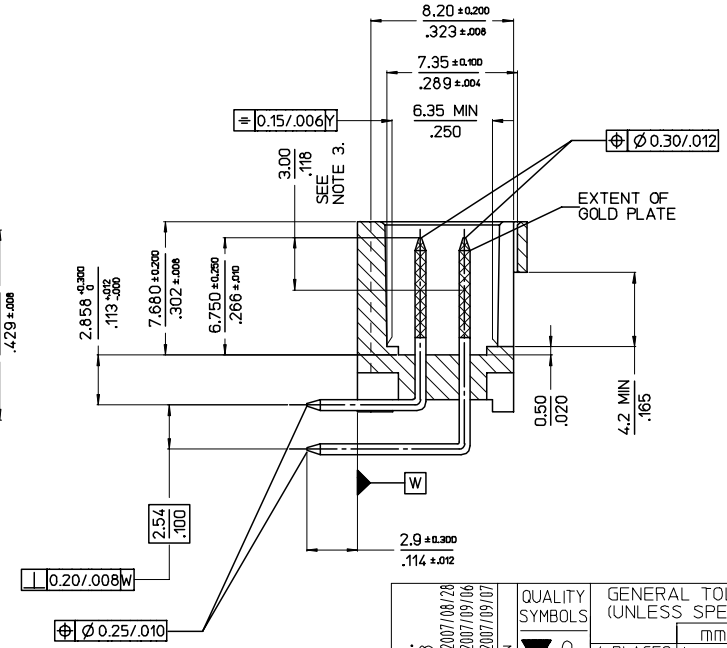

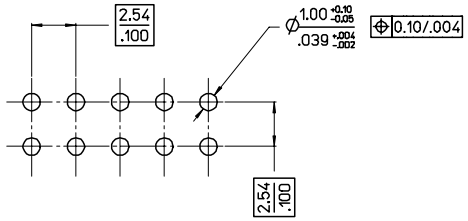

RECOMMENDED P.C. BOARD HOLE PATTERN

NOTES

1.MATERIAL:-
- PIN:- (0.635)/.025 SQ. BRASS WIRE.
- HOUSING:- 15% GLASS FILLED POLYESTER
- UL 94 V-0 COLOUR BLACK

2.FOR PLATING VERSIONS AND VOID VERSIONS SEE SHEET 2.

3.MEASUREMENT POINT FOR MINIMUM PLATING THICKNESS.

4.FOR PRODUCT SPEC SEE PS-99020-0001

5. RECOMMENDED PCB THICKNESS: 1.6mm

REV	DESCRIPTION
P	MODIFIED TITLE. EC NO: E2008-0083 DRWN:DBYRNES CHKD: APPR:EOMAHONY 2007/08/28 2007/09/06 2007/09/07

QUALITY SYMBOLS: ▼=0 ▽=0

GENERAL TOLERANCES (UNLESS SPECIFIED)

	mm	INCH
4 PLACES	± ---	± ---
3 PLACES	± ---	± .004
2 PLACES	± 0.10	± ---
1 PLACE	± ---	± ---
ANGULAR ±1/2°		

DRAFT WHERE APPLICABLE MUST REMAIN WITHIN DIMENSIONS

DIMENSION STYLE: MM ONLY
SCALE: 5:1
DESIGN UNITS: METRIC
THIRD ANGLE PROJECTION

DRAWN BY: KS DATE: 1987/09/11
CHECKED BY DATE
APPROVED BY DATE

TITLE: C-GRID III DUAL ROW RIGHT ANGLE SHROUDED HEADER

molex MOLEX INCORPORATED

MATERIAL NO.: SEE CHART
DOCUMENT NO.: SDA-90130
SHEET NO.: 3 OF 4
SIZE: A2

THIS DRAWING CONTAINS INFORMATION THAT IS PROPRIETARY TO MOLEX INCORPORATED AND SHOULD NOT BE USED WITHOUT WRITTEN PERMISSION

NO OF CKTS	HSG CKT SIZE	PART NUMBER PLATING TYPE A	PLATING TYPE E	PLATING TYPE F
6	6	90130-X106	90130-X206	90130-X306
8	8	X108	X208	X308
10	10	X110	X210	X310
12	12	X112	X212	X312
14	14	X114	X214	X314
16	16	X116	X216	X316
18	18	X118	X218	X318
20	20	X120	X220	X320
22	22	X122	X222	X322
24	24	X124	X224	X324
26	26	X126	X226	X326
28	28	X128	X228	X328
30	30	X130	X230	X330
32	32	X132	X232	X332
34	34	X134	X234	X334
36	36	X136	X236	X336
38	38	X138	X238	X338
40	40	X140	X240	X340
42	42	X142	X242	X342
44	44	X144	X244	X344
46	46	X146	X246	X346
48	48	X148	X248	X348
50	50	X150	X250	X350
52	52	X152	X252	X352
54	54	X154	X254	X354
56	56	X156	X256	X356
58	58	X158	X258	X358
60	60	X160	X260	X360
62	62	X162	X262	X362
64	64	X164	X264	X364
66	66	X166	X266	X366
68	68	90130-X168	90130-X268	90130-X368

VERSION FULLY LOADED

NOTES:
1. FOR ASSY SEE SHEET 3.
2. FOR PLATING DETAILS SEE SDES-99000-0003

90130 - x x x x

- INDICATES CIRCUIT HOUSING SIZE
- PLATING
  - 1 - TYPE A
  - 2 - TYPE E
  - 3 - TYPE F
- STYLE: - RIGHT ANGLE ASSY
  - 3 VERSION FULLY LOADED BLACK

REMOVED NATURAL OPT
EC NO: E2008-0083 2007/08/28
DRWN:DBYRNES 2007/09/06
CHKD: 2007/09/07
APPR:EOMAHONY
REV DESCRIPTION

QUALITY SYMBOLS
▼=0
▽=0

GENERAL TOLERANCES (UNLESS SPECIFIED)

	mm	INCH
4 PLACES	± ---	± ---
3 PLACES	± ---	± ---
2 PLACES	± ---	± ---
1 PLACE	± ---	± ---
ANGULAR ±---°		

DRAFT WHERE APPLICABLE MUST REMAIN WITHIN DIMENSIONS

DIMENSION STYLE: MM ONLY
SCALE: ---
DESIGN UNITS: METRIC
THIRD ANGLE PROJECTION

DRAWN BY: KS DATE: 1987/09/10
CHECKED BY DATE
APPROVED BY DATE

TITLE: C-GRID III DUAL ROW RIGHT ANGLE SHROUDED HEADER

molex MOLEX INCORPORATED

MATERIAL NO.: SEE CHART
DOCUMENT NO.: SDA-90130
SHEET NO.: 4 OF 4
SIZE: A2

THIS DRAWING CONTAINS INFORMATION THAT IS PROPRIETARY TO MOLEX INCORPORATED AND SHOULD NOT BE USED WITHOUT WRITTEN PERMISSION