2SK2930

Silicon N Channel MOS FET
High Speed Power Switching

HITACHI

ADE-208-553C (Z)
4th. Edition
Jun 1998

Features

- Low on-resistance
  R_{DS} =0.020 Ω typ.
- High speed switching
- 4V gate drive device can be driven from 5V source

Outline

TO–220AB

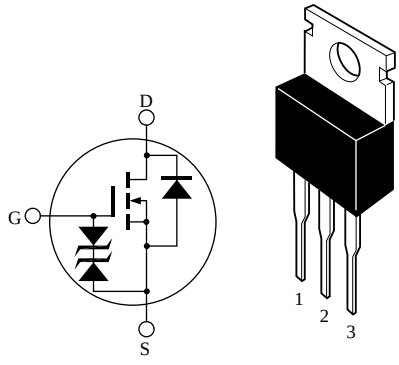

1. Gate
2. Drain(Flange
3. Source

Hitachi semiconductor

Absolute Maximum Ratings (Ta = 25°C)

Item	Symbol	Ratings	Unit
Drain to source voltage	V_{DSS}	60	V
Gate to source voltage	V_{GSS}	±20	V
Drain current	I_D	35	A
Drain peak current	$I_{D(pulse)}$ Note1	140	A
Body-drain diode reverse drain current	I_{DR}	35	A
Avalanche current	I_{AP} Note3	35	A
Avalanche energy	E_{AR} Note3	105	mJ
Channel dissipation	Pch Note2	50	W
Channel temperature	Tch	150	°C
Storage temperature	Tstg	–55 to +150	°C

Note: 1. PW ≤ 10µs, duty cycle ≤ 1 %
2. Value at Tc = 25°C
3. Value at Tch = 25°C, Rg ≥ 50Ω

Electrical Characteristics (Ta = 25°C)

Item	Symbol	Min	Typ	Max	Unit	Test Conditions
Drain to source breakdown voltage	$V_{(BR)DSS}$	60	—	—	V	I_D = 10mA, V_{GS} = 0
Gate to source breakdown voltage	$V_{(BR)GSS}$	±20	—	—	V	I_G = ±100µA, V_{DS} = 0
Gate to source leak current	I_{GSS}	—	—	±10	µA	V_{GS} = ±16V, V_{DS} = 0
Zero gate voltege drain current	I_{DSS}	—	—	10	µA	V_{DS} = 60 V, V_{GS} = 0
Gate to source cutoff voltage	$V_{GS(off)}$	1.5	—	2.5	V	I_D = 1mA, V_{DS} = 10V
Static drain to source on state resistance	$R_{DS(on)}$	—	0.020	0.026	Ω	I_D = 15A, V_{GS} = 10V Note4
	$R_{DS(on)}$	—	0.032	0.050	Ω	I_D = 15A, V_{GS} = 4V Note4
Forward transfer admittance	$\|y_{fs}\|$	14	23	—	S	I_D = 15A, V_{DS} = 10V Note4
Input capacitance	Ciss	—	1100	—	pF	V_{DS} = 10V
Output capacitance	Coss	—	540	—	pF	V_{GS} = 0
Reverse transfer capacitance	Crss	—	200	—	pF	f = 1MHz
Turn-on delay time	$t_{d(on)}$	—	15	—	ns	I_D = 15A, V_{GS} = 10V
Rise time	t_r	—	180	—	ns	R_L = 2Ω
Turn-off delay time	$t_{d(off)}$	—	175	—	ns	
Fall time	t_f	—	195	—	ns	
Body–drain diode forward voltage	V_{DF}	—	0.95	—	V	I_F = 35A, V_{GS} = 0
Body–drain diode reverse recovery time	t_{rr}	—	40	—	ns	I_F = 35A, V_{GS} = 0 diF/ dt =50A/µs

Note: 4. Pulse test

Main Characteristics

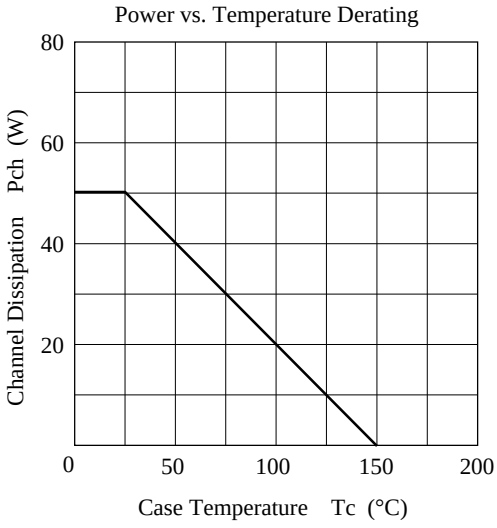

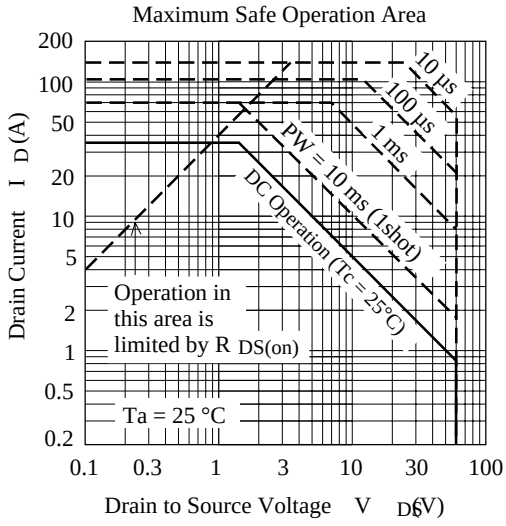

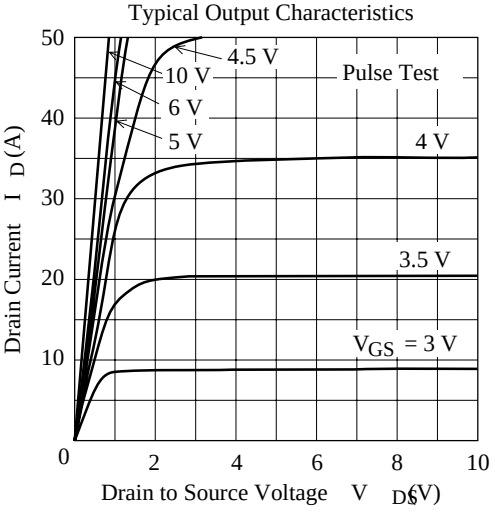

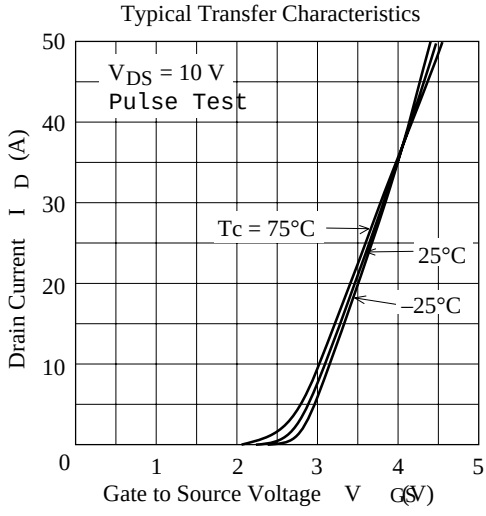

Drain to Source Saturation Voltage vs. Gate to Source Voltage

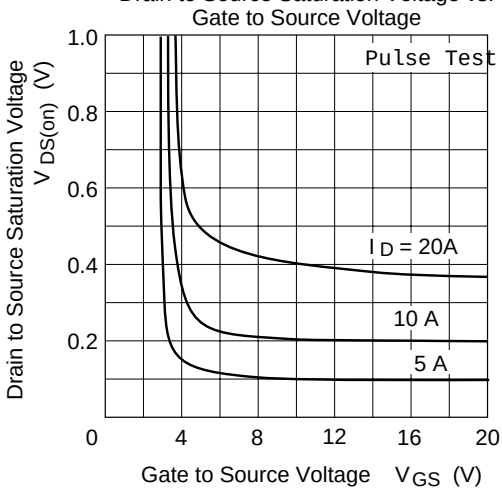

Static Drain to Source on State Resistance vs. Drain Current

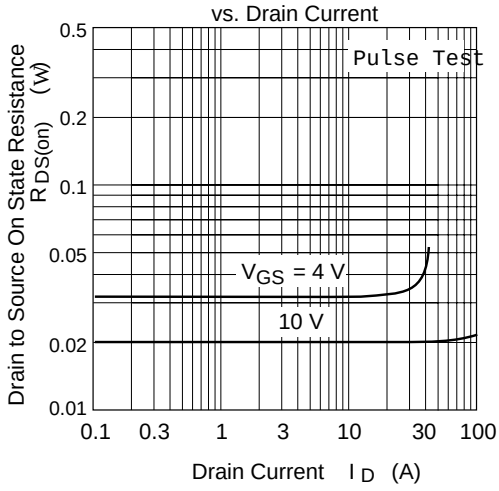

Static Drain to Source on State Resistance vs. Temperature

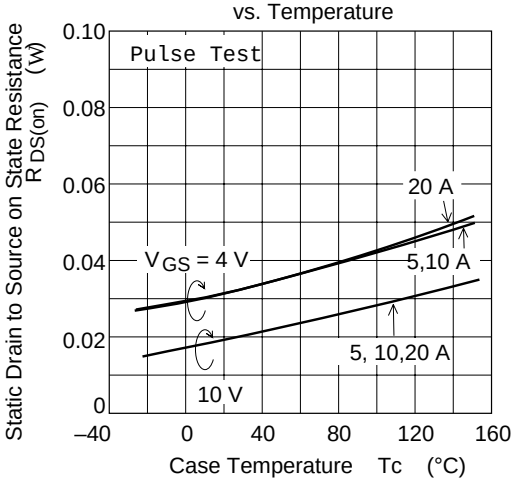

Forward Transfer Admittance vs. Drain Current

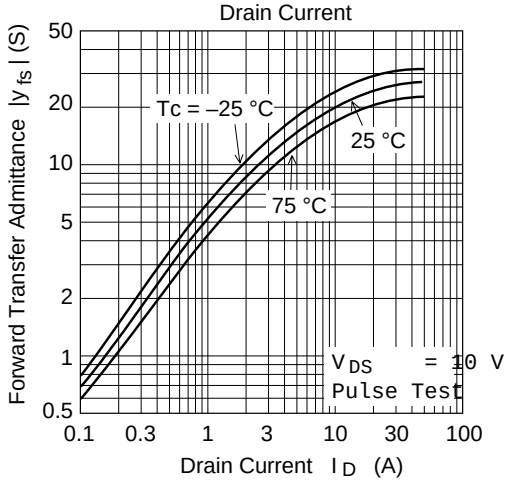

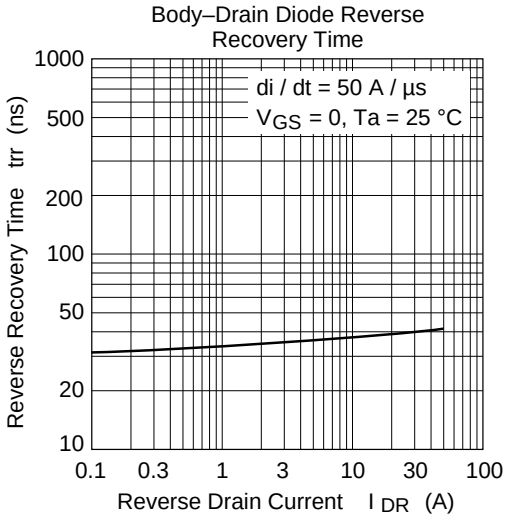
Body–Drain Diode Reverse Recovery Time
di / dt = 50 A / µs
VGS = 0, Ta = 25 °C
Reverse Recovery Time trr (ns)
1000
500
200
100
50
20
10
0.1
0.3
1
3
10
30
100
Reverse Drain Current I DR (A)

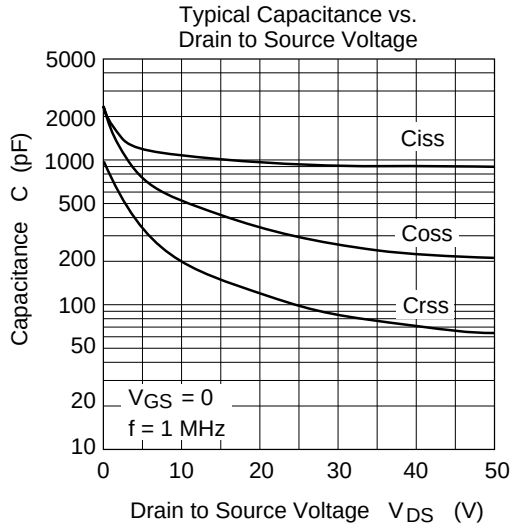
Typical Capacitance vs. Drain to Source Voltage
Capacitance C (pF)
5000
2000
1000
500
200
100
50
20
10
Ciss
Coss
Crss
VGS = 0
f = 1 MHz
0
10
20
30
40
50
Drain to Source Voltage V DS (V)

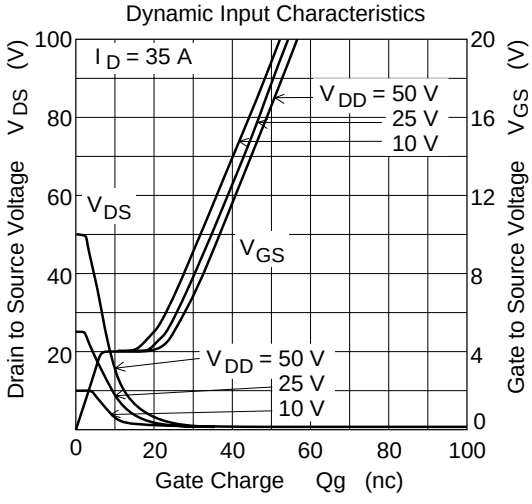
Dynamic Input Characteristics
I D = 35 A
V DD = 50 V
25 V
10 V
V DS
V GS
Drain to Source Voltage V DS (V)
Gate to Source Voltage V GS (V)
100
80
60
40
20
20
16
12
8
4
0
0
20
40
60
80
100
Gate Charge Qg (nc)

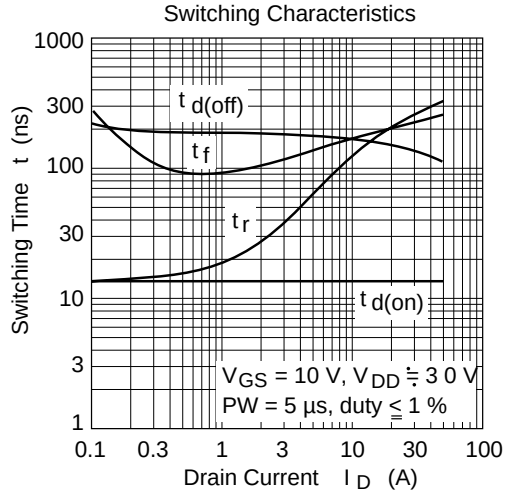
Switching Characteristics
t d(off)
t f
t r
t d(on)
VGS = 10 V, V DD ≒ 3 0 V
PW = 5 µs, duty ≦ 1 %
Switching Time t (ns)
1000
300
100
30
10
3
1
0.1
0.3
1
3
10
30
100
Drain Current I D (A)

Reverse Drain Current vs.
Source to Drain Voltage

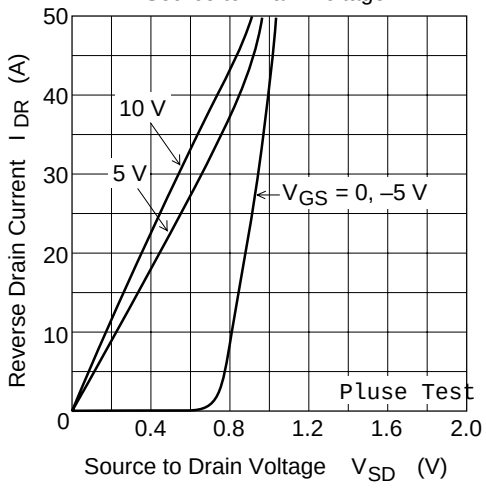

Maximum Avalanche Energy vs.
Channel Temperature Derating

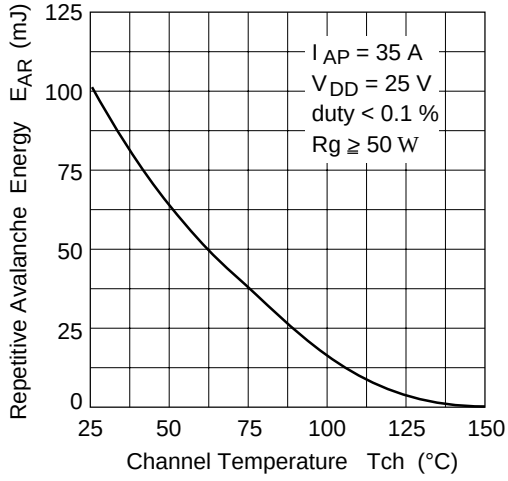

Avalanche Test Circuit

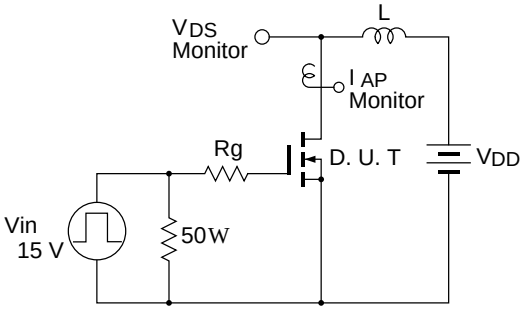

Avalanche Waveform

$$E_{AR} = \frac{1}{2} \cdot L \cdot I_{AP}^{2} \cdot \frac{V_{DSS}}{V_{DSS} - V_{DD}}$$

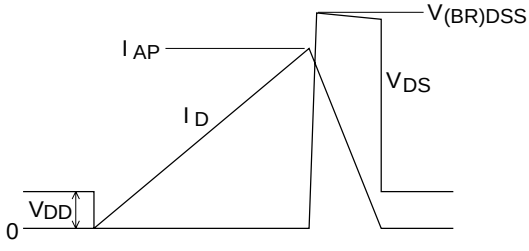

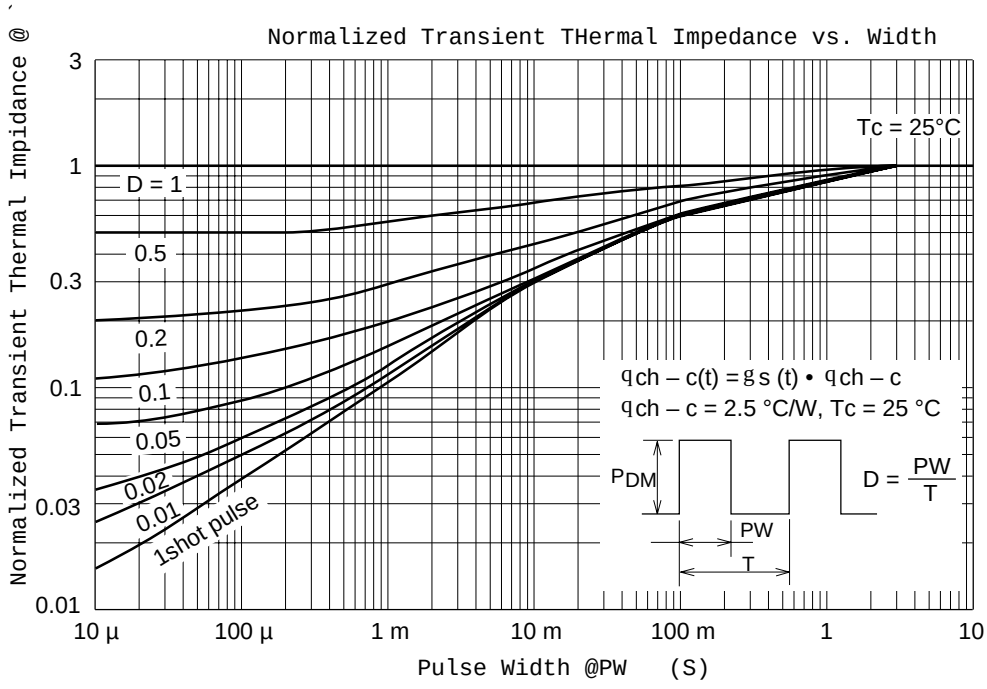

Switching Time Test Circuit

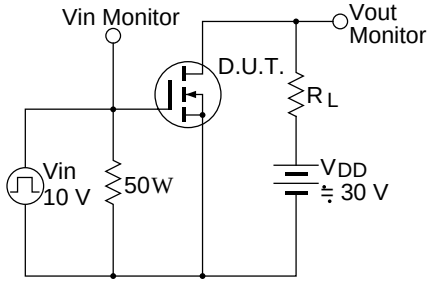

Waveform

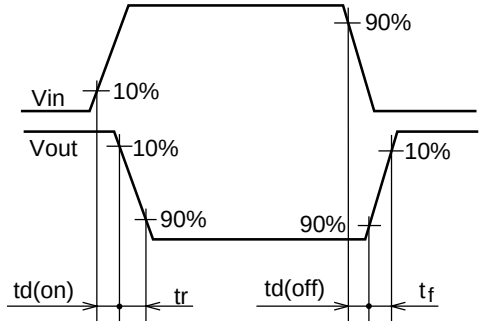

Package Dimentions

Unit: mm

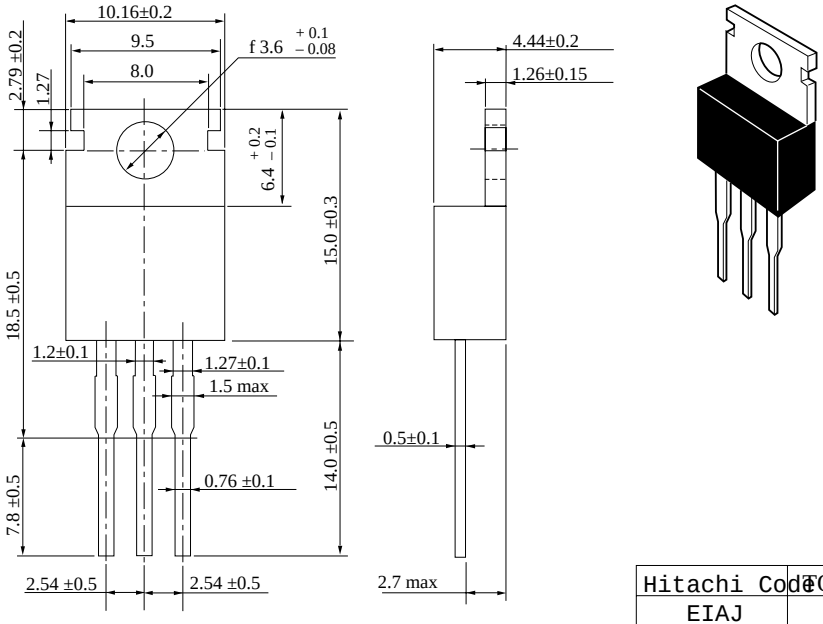

Hitachi Code	TO–220AB
EIAJ	SC–46
JEDEC	—

Cautions

1. Hitachi neither warrants nor grants licenses of any rights of Hitachi's or any third party's patent, copyright, trademark, or other intellectual property rights for information contained in this document. Hitachi bears no responsibility for problems that may arise with third party's rights, including intellectual property rights, in connection with use of the information contained in this document.
2. Products and product specifications may be subject to change without notice. Confirm that you have received the latest product standards or specifications before final design, purchase or use.
3. Hitachi makes every attempt to ensure that its products are of high quality and reliability. However, contact Hitachi's sales office before using the product in an application that demands especially high quality and reliability or where its failure or malfunction may directly threaten human life or cause risk of bodily injury, such as aerospace, aeronautics, nuclear power, combustion control, transportation, traffic, safety equipment or medical equipment for life support.
4. Design your application so that the product is used within the ranges guaranteed by Hitachi particularly for maximum rating, operating supply voltage range, heat radiation characteristics, installation conditions and other characteristics. Hitachi bears no responsibility for failure or damage when used beyond the guaranteed ranges. Even within the guaranteed ranges, consider normally foreseeable failure rates or failure modes in semiconductor devices and employ systemic measures such as fail-safes, so that the equipment incorporating Hitachi product does not cause bodily injury, fire or other consequential damage due to operation of the Hitachi product.
5. This product is not designed to be radiation resistant.
6. No one is permitted to reproduce or duplicate, in any form, the whole or part of this document without written approval from Hitachi.
7. Contact Hitachi's sales office for any questions regarding this document or Hitachi semiconductor products.

HITACHI

Hitachi, Ltd.
Semiconductor & Integrated Circuits.
Nippon Bldg., 2-6-2, Ohte-machi, Chiyoda-ku, Tokyo 100-0004, Japan
Tel: Tokyo (03) 3270-2111 Fax: (03) 3270-5109

URL
NorthAmerica : http:semiconductor.hitachi.com/
Europe : http://www.hitachi-eu.com/hel/ecg
Asia (Singapore) : http://www.has.hitachi.com.sg/grp3/sicd/index.htm
Asia (Taiwan) : http://www.hitachi.com.tw/E/Product/SICD_Frame.htm
Asia (HongKong) : http://www.hitachi.com.hk/eng/bo/grp3/index.htm
Japan : http://www.hitachi.co.jp/Sicd/indx.htm

For further information write to:

Hitachi Semiconductor (America) Inc.
179 East Tasman Drive,
San Jose,CA 95134
Tel: <1> (408) 433-1990
Fax: <1>(408) 433-0223

Hitachi Europe GmbH
Electronic components Group
Dornacher Stra§e 3
D-85622 Feldkirchen, Munich
Germany
Tel: <49> (89) 9 9180-0
Fax: <49> (89) 9 29 30 00

Hitachi Europe Ltd.
Electronic Components Group.
Whitebrook Park
Lower Cookham Road
Maidenhead
Berkshire SL6 8YA, United Kingdom
Tel: <44> (1628) 585000
Fax: <44> (1628) 778322

Hitachi Asia Pte. Ltd.
16 Collyer Quay #20-00
Hitachi Tower
Singapore 049318
Tel: 535-2100
Fax: 535-1533

Hitachi Asia Ltd.
Taipei Branch Office
3F, Hung Kuo Building. No.167,
Tun-Hwa North Road, Taipei (105)
Tel: <886> (2) 2718-3666
Fax: <886> (2) 2718-8180

Hitachi Asia (Hong Kong) Ltd.
Group III (Electronic Components)
7/F., North Tower, World Finance Centre,
Harbour City, Canton Road, Tsim Sha Tsui,
Kowloon, Hong Kong
Tel: <852> (2) 735 9218
Fax: <852> (2) 730 0281
Telex: 40815 HITEC HX

Copyright ' Hitachi, Ltd., 1999. All rights reserved. Printed in Japan.