Rev	AWO #	Description	Date	Appr
-		RELEASED	4/27/11	

APPROVED: _____

DATE: _____ TITLE: _____

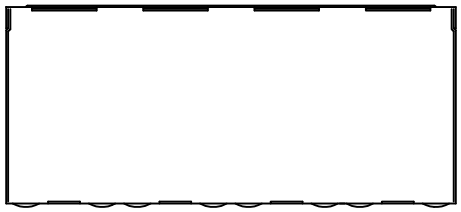

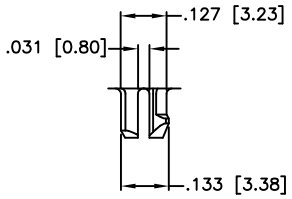

DETAIL X

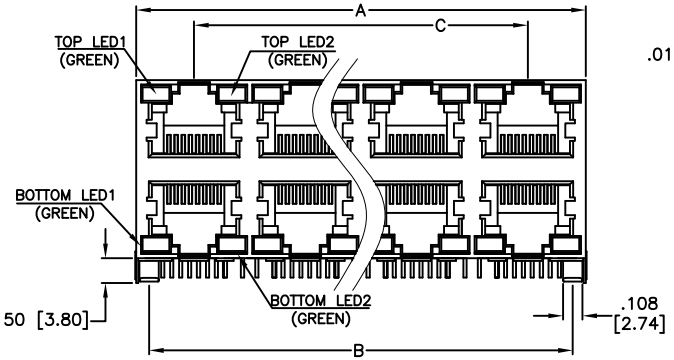

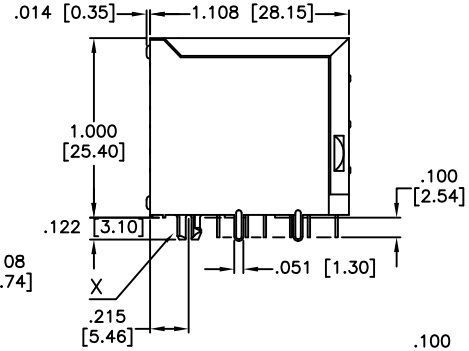

PART NUMBER	PORTS	DIMENSIONS A	DIMENSIONS B	DIMENSIONS C
MTJG-2-88JX1-FSM-LD	2 X 1	.650 [16.51]	.500 [12.70]	
MTJG-4-88JX1-FSM-LD	2 X 2	1.266 [32.15]	1.120 [28.45]	.620 [15.75]
MTJG-6-88JX1-FSM-LD	2 X 3	1.886 [47.90]	1.740 [44.20]	1.240 [31.50]
MTJG-8-88JX1-FSM-LD	2 X 4	2.506 [63.65]	2.360 [59.95]	1.860 [47.25]
MTJG-12-88JX1-FSM-LD	2 X 6	3.746 [95.15]	3.600 [91.45]	3.100 [78.75]

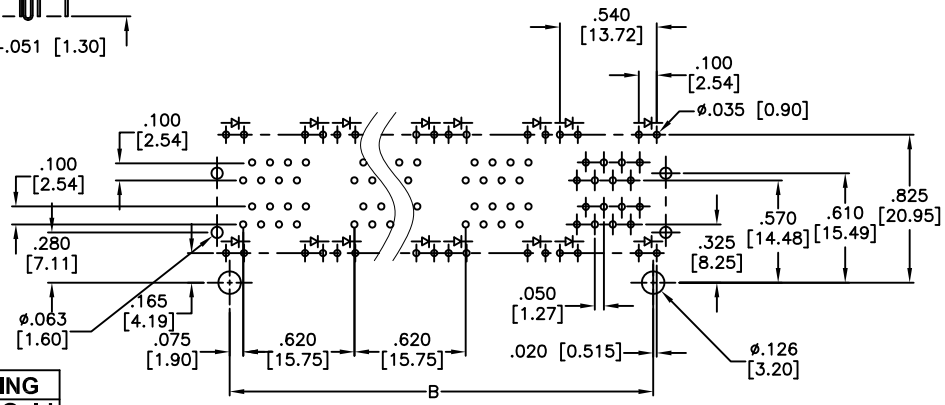

RECOMMENDED P.C.B. LAYOUT

"X"	PLATING
0	15 uin Gold
1	30 uin Gold
2	50 uin Gold

SPECIFICATIONS:
Material:
Insulator: PBT, glass reinforced, rated UL 94V-0
Insulator color: Black
Contacts: Phosphor Bronze
Shield: Copper Alloy, Nickel plated
Contact Plating:
X Gold over Nickel underplate on contact area,
Tin over Copper underplate on tails
(See chart for thickness).
Electrical:
Insulation resistance: 500 Mohms min
Dielectric withstanding voltage: 1000 VAC min
Temperature Rating:
Operating temperature: 0°C to +70°C
Environmental:
Lead free, RoHS compliant.
Recommended soldering temp: 235°C for 5 sec.

RoHS COMPLIANT

UNLESS OTHERWISE SPECIFIED
ALL DIMENSIONS ARE MM [INCHES]
TOLERANCES: EXCEPT AS NOTED

INCHES		HOLES	
.X	± .10	Ø.X	±.10
.XX	± .020	Ø.XX	±.015
.XXX	± .015	Ø.XXX	±.010

APPROVALS		DATE
DRAWN	DY	4/27/11
CHECKED		
APPROVED		

ADAM TECH
909 Rahway Avenue, Union, NJ 07083
Phone: 908-687-5000 Fax: 908-687-5710

TITLE: MODULAR JACK GANGED, 8P8C W/LED1 GREEN & LED2 GREEN

SIZE	PART NO.	REV.
X	MTJG-X-88JX1-FSM-LD	-

REF: S00065T | SCALE: NTS | SHEET 1 OF 1