TOSHIBA CMOS Digital Integrated Circuit Silicon Monolithic

TC74LCX04F,TC74LCX04FN,TC74LCX04FT,TC74LCX04FK

Low-Voltage Hex Inverter with 5-V Tolerant Inputs and Outputs

The TC74LCX04 is a high-performance CMOS inverter. Designed for use in 3.3-V systems, it achieves high-speed operation while maintaining the CMOS low power dissipation.

The device is designed for low-voltage (3.3 V) V_{CC} applications, but it could be used to interface to 5-V supply environment for inputs.

All inputs are equipped with protection circuits against static discharge.

Features

- Low-voltage operation: V_{CC} = 2.0 to 3.6 V
- High-speed operation: t_{pd} = 5.2 ns (max) (V_{CC} = 3.0 to 3.6 V)
- Output current: $|I_{OH}|/I_{OL}$ = 24 mA (min) (V_{CC} = 3.0 V)
- Latch-up performance: –500 mA
- Available in JEDEC SOP, JEITA SOP, TSSOP and VSSOP (US)
- Power-down protection provided on all inputs and outputs
- Pin and function compatible with the 74 series (74AC/VHC/HC/F/ALS/LS etc.) 04 type

Note: xxxFN (JEDEC SOP) is not available in Japan.

TC74LCX04F

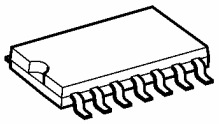

SOP14-P-300-1.27A

TC74LCX04FN

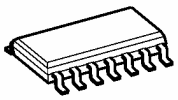

SOL14-P-150-1.27

TC74LCX04FT

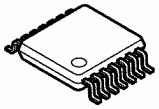

TSSOP14-P-0044-0.65A

TC74LCX04FK

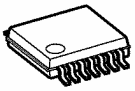

VSSOP14-P-0030-0.50

Weight

SOP14-P-300-1.27A	: 0.18 g (typ.)
SOL14-P-150-1.27	: 0.12 g (typ.)
TSSOP14-P-0044-0.65A	: 0.06 g (typ.)
VSSOP14-P-0030-0.50	: 0.02 g (typ.)

Pin Assignment (top view)

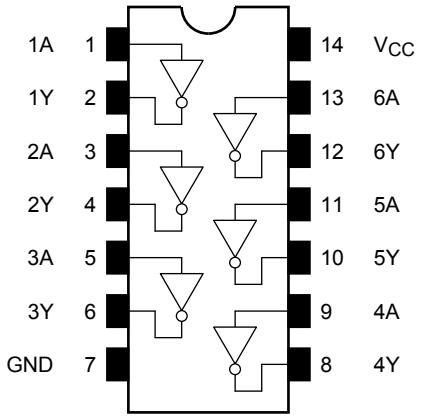

IEC Logic Symbol

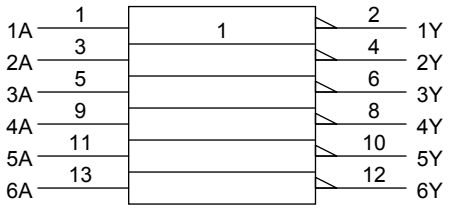

Truth Table

Inputs	Outputs
A	Y
L	H
H	L

Absolute Maximum Ratings (Note 1)

Characteristics	Symbol	Rating	Unit
Power supply voltage	V_{CC}	−0.5 to 7.0	V
DC input voltage	V_{IN}	−0.5 to 7.0	V
DC output voltage	V_{OUT}	−0.5 to 7.0 (Note 2)	V
		−0.5 to V_{CC} + 0.5 (Note 3)	
Input diode current	I_{IK}	−50	mA
Output diode current	I_{OK}	±50 (Note 4)	mA
DC output current	I_{OUT}	±50	mA
Power dissipation	P_D	180	mW
DC V_{CC}/ground current	I_{CC}/I_{GND}	±100	mA
Storage temperature	T_{stg}	−65 to 150	°C

Note 1: Exceeding any of the absolute maximum ratings, even briefly, lead to deterioration in IC performance or even destruction.
Using continuously under heavy loads (e.g. the application of high temperature/current/voltage and the significant change in temperature, etc.) may cause this product to decrease in the reliability significantly even if the operating conditions (i.e. operating temperature/current/voltage, etc.) are within the absolute maximum ratings and the operating ranges.
Please design the appropriate reliability upon reviewing the Toshiba Semiconductor Reliability Handbook ("Handling Precautions"/"Derating Concept and Methods") and individual reliability data (i.e. reliability test report and estimated failure rate, etc).

Note 2: $V_{CC} = 0$ V

Note 3: High or low state. I_{OUT} absolute maximum rating must be observed.

Note 4: $V_{OUT} < GND$, $V_{OUT} > V_{CC}$

Operating Ranges (Note 1)

Characteristics	Symbol	Rating	Unit
Power supply voltage	V_{CC}	2.0 to 3.6	V
		1.5 to 3.6 (Note 2)	
Input voltage	V_{IN}	0 to 5.5	V
Output voltage	V_{OUT}	0 to 5.5 (Note 3)	V
		0 to V_{CC} (Note 4)	
Output current	I_{OH}/I_{OL}	±24 (Note 5)	mA
		±12 (Note 6)	
Operating temperature	T_{opr}	−40 to 85	°C
Input rise and fall time	dt/dv	0 to 10 (Note 7)	ns/V

Note 1: The operating ranges must be maintained to ensure the normal operation of the device. Unused inputs must be tied to either VCC or GND.

Note 2: Data retention only

Note 3: V_{CC} = 0 V

Note 4: High or low state

Note 5: V_{CC} = 3.0 to 3.6 V

Note 6: V_{CC} = 2.7 to 3.0 V

Note 7: V_{IN} = 0.8 to 2.0 V, V_{CC} = 3.0 V

Electrical Characteristics

DC Characteristics (Ta = −40 to 85°C)

Characteristics		Symbol	Test Condition		V_{CC} (V)	Min	Max	Unit
Input voltage	H-level	V_{IH}	—		2.7 to 3.6	2.0	—	V
	L-level	V_{IL}	—		2.7 to 3.6	—	0.8	
Output voltage	H-level	V_{OH}	$V_{IN} = V_{IL}$	I_{OH} = −100 μA	2.7 to 3.6	V_{CC} − 0.2	—	V
				I_{OH} = −12 mA	2.7	2.2	—	
				I_{OH} = −18 mA	3.0	2.4	—	
				I_{OH} = −24 mA	3.0	2.2	—	
	L-level	V_{OL}	$V_{IN} = V_{IH}$	I_{OL} = 100 μA	2.7 to 3.6	—	0.2	
				I_{OL} = 12 mA	2.7	—	0.4	
				I_{OL} = 16 mA	3.0	—	0.4	
				I_{OL} = 24 mA	3.0	—	0.55	
Input leakage current		I_{IN}	V_{IN} = 0 to 5.5 V		2.7 to 3.6	—	±5.0	μA
Power-off leakage current		I_{OFF}	V_{IN}/V_{OUT} = 5.5 V		0	—	10.0	μA
Quiescent supply current		I_{CC}	$V_{IN} = V_{CC}$ or GND		2.7 to 3.6	—	10.0	μA
			V_{IN} = 3.6 to 5.5 V		2.7 to 3.6	—	±10.0	
Increase in Icc per input		ΔI_{CC}	$V_{IH} = V_{CC}$ − 0.6 V		2.7 to 3.6	—	500	

AC Characteristics (Ta = –40 to 85°C)

Characteristics	Symbol	Test Condition	V_{CC} (V)	Min	Max	Unit
Propagation delay time	t_{pLH}	Figure 1, Figure 2	2.7	—	6.0	ns
	t_{pHL}		3.3 ± 0.3	1.5	5.2	
Output to output skew	t_{osLH}	(Note)	2.7	—	—	ns
	t_{osHL}		3.3 ± 0.3	—	1.0	

Note: Parameter guaranteed by design.
($t_{osLH} = |t_{pLHm} - t_{pLHn}|$, $t_{osHL} = |t_{pHLm} - t_{pHLn}|$)

Dynamic Switching Characteristics (Ta = 25°C, input: $t_r = t_f = 2.5$ ns, $C_L = 50$ pF, $R_L = 500\ \Omega$)

Characteristics	Symbol	Test Condition	V_{CC} (V)	Typ.	Unit
Quiet output maximum dynamic V_{OL}	V_{OLP}	$V_{IH} = 3.3$ V, $V_{IL} = 0$ V	3.3	0.8	V
Quiet output minimum dynamic V_{OL}	$\|V_{OLV}\|$	$V_{IH} = 3.3$ V, $V_{IL} = 0$ V	3.3	0.8	V

Capacitive Characteristics (Ta = 25°C)

Characteristics	Symbol	Test Condition	V_{CC} (V)	Typ.	Unit
Input capacitance	C_{IN}	—	3.3	7	pF
Output capacitance	C_{OUT}	—	0	8	pF
Power dissipation capacitance	C_{PD}	$f_{IN} = 10$ MHz (Note)	3.3	25	pF

Note: C_{PD} is defined as the value of the internal equivalent capacitance which is calculated from the operating current consumption without load.
Average operating current can be obtained by the equation:
$I_{CC\ (opr)} = C_{PD} \cdot V_{CC} \cdot f_{IN} + I_{CC}/6$ (per gate)

AC Test Circuit

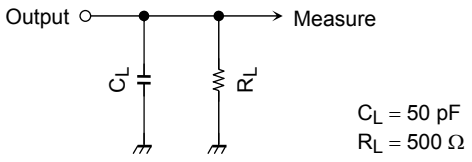

Figure 1

AC Waveform

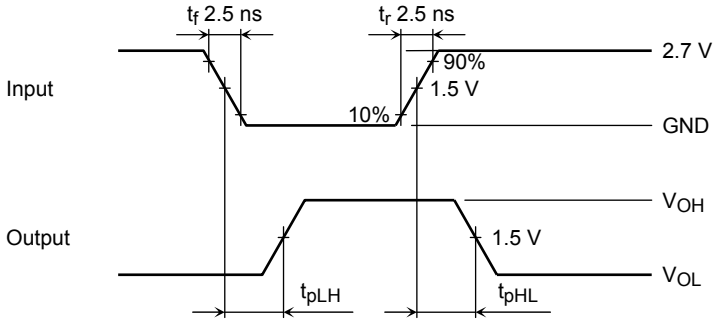

Figure 2 t_{pLH}, t_{pHL}

Package Dimensions

SOP14-P-300-1.27A Unit: mm

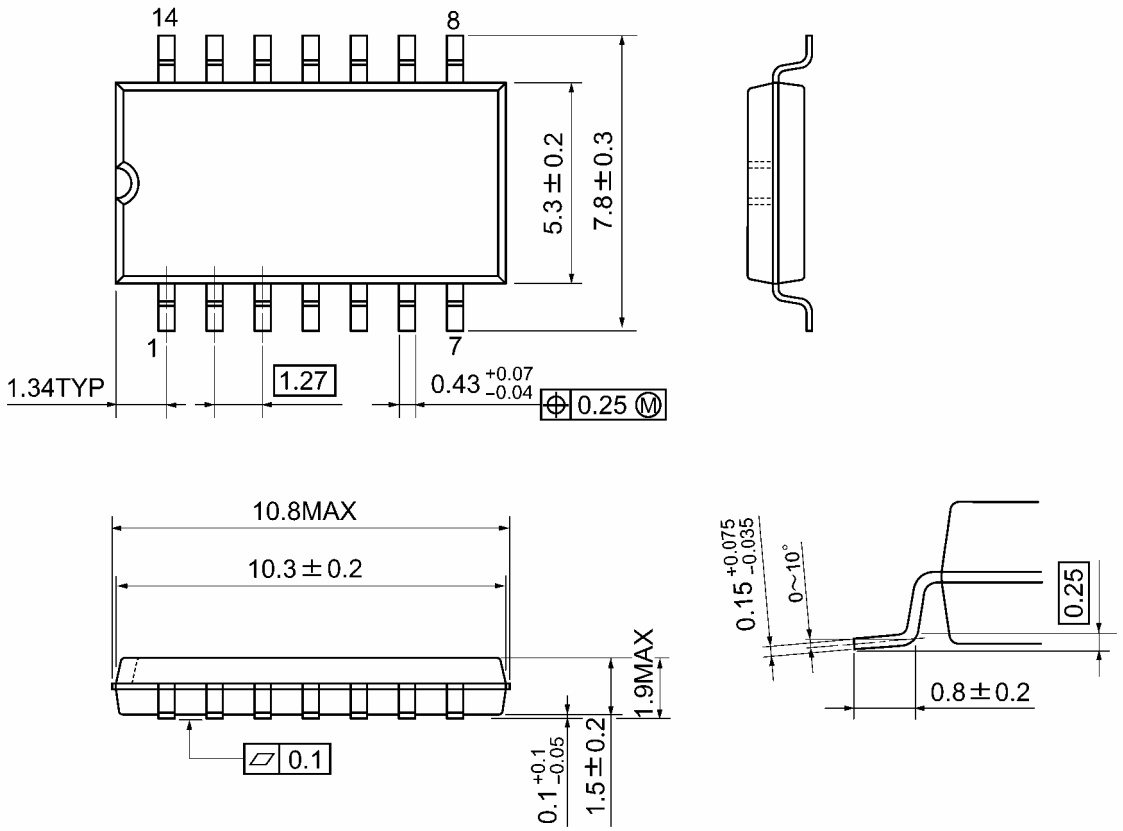

Weight: 0.18 g (typ.)

Package Dimensions (Note)

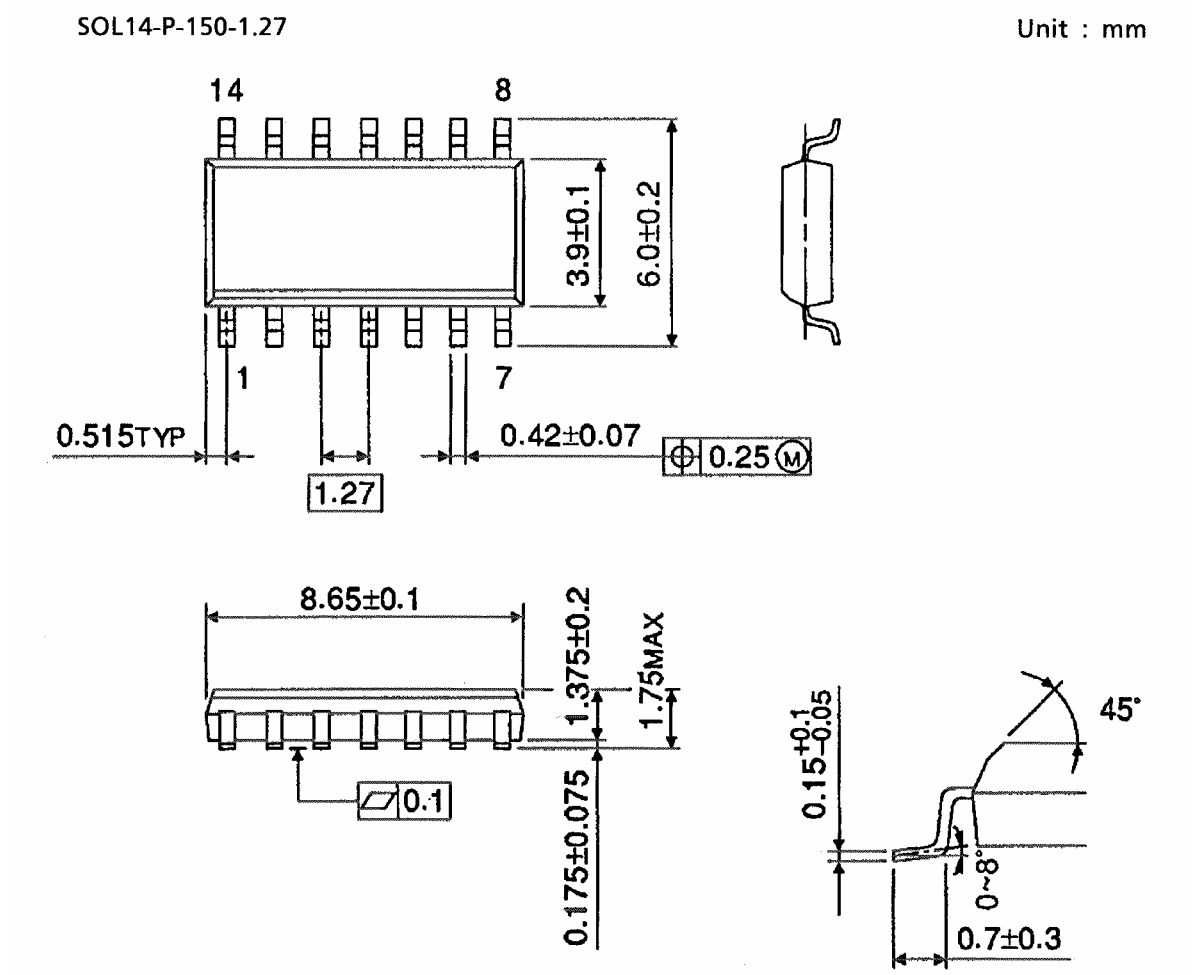

Note: This package is not available in japan.

Weight: 0.12 g (typ.)

Package Dimensions

TSSOP14-P-0044-0.65A Unit: mm

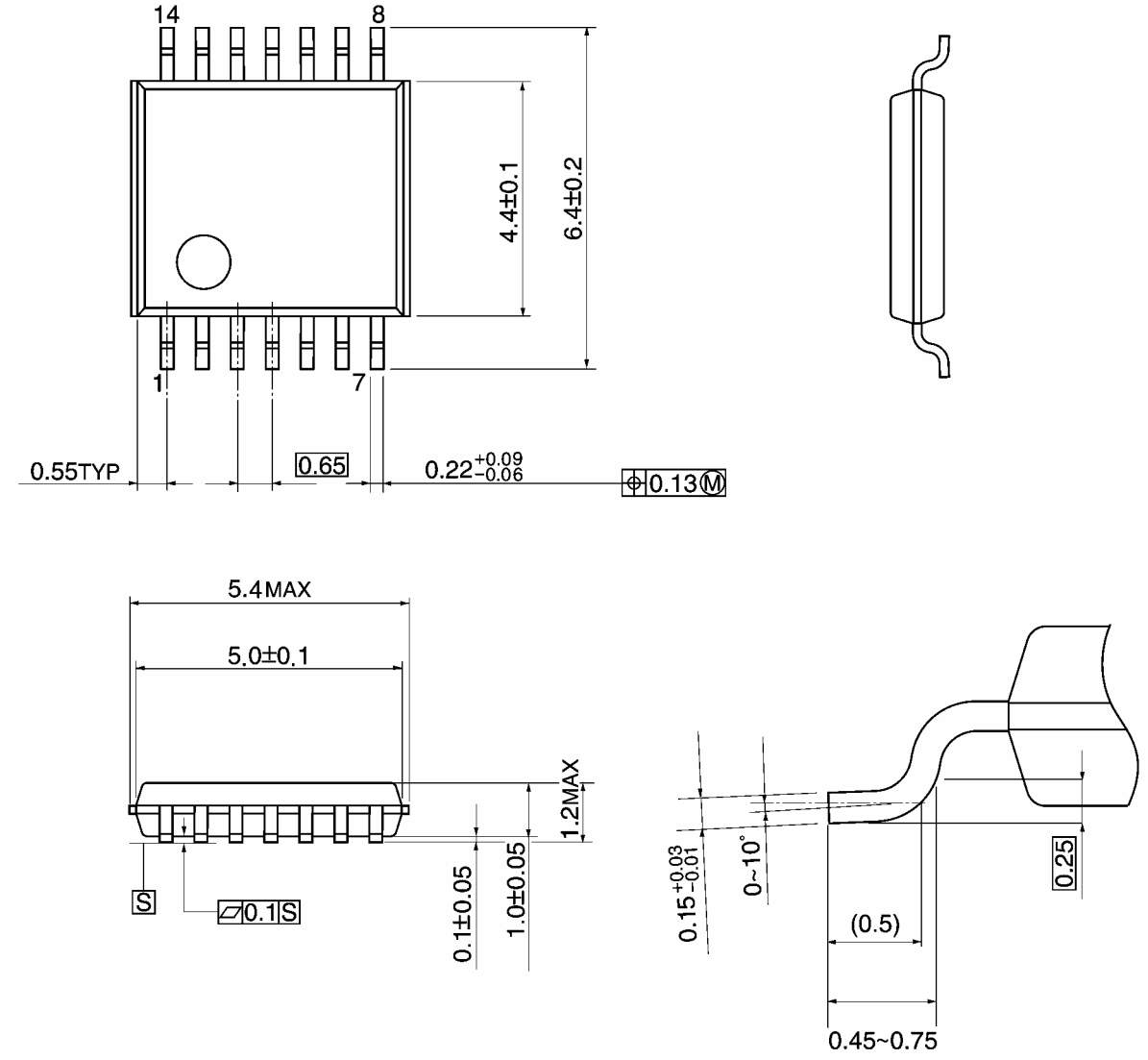

Weight: 0.06 g (typ.)

Package Dimensions

VSSOP14-P-0030-0.50 Unit: mm

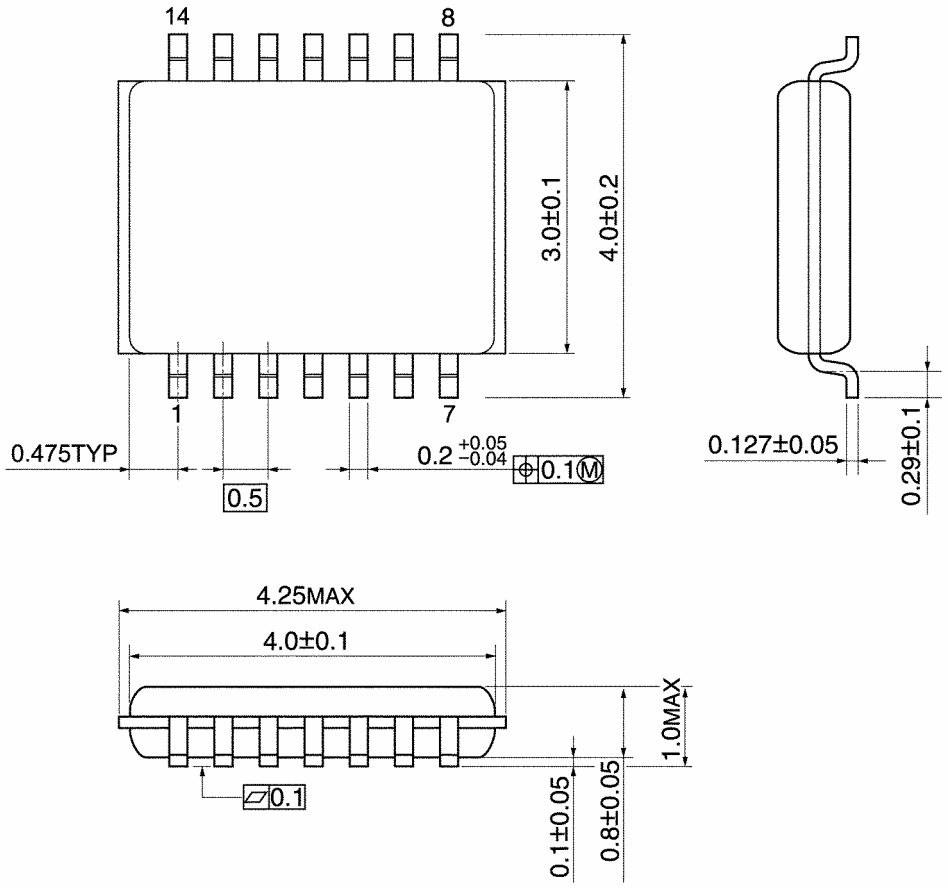

Weight: 0.02 g (typ.)

RESTRICTIONS ON PRODUCT USE

20070701-EN GENERAL

- The information contained herein is subject to change without notice.
- TOSHIBA is continually working to improve the quality and reliability of its products. Nevertheless, semiconductor devices in general can malfunction or fail due to their inherent electrical sensitivity and vulnerability to physical stress. It is the responsibility of the buyer, when utilizing TOSHIBA products, to comply with the standards of safety in making a safe design for the entire system, and to avoid situations in which a malfunction or failure of such TOSHIBA products could cause loss of human life, bodily injury or damage to property.
  In developing your designs, please ensure that TOSHIBA products are used within specified operating ranges as set forth in the most recent TOSHIBA products specifications. Also, please keep in mind the precautions and conditions set forth in the “Handling Guide for Semiconductor Devices,” or “TOSHIBA Semiconductor Reliability Handbook” etc.
- The TOSHIBA products listed in this document are intended for usage in general electronics applications (computer, personal equipment, office equipment, measuring equipment, industrial robotics, domestic appliances, etc.).These TOSHIBA products are neither intended nor warranted for usage in equipment that requires extraordinarily high quality and/or reliability or a malfunction or failure of which may cause loss of human life or bodily injury (“Unintended Usage”). Unintended Usage include atomic energy control instruments, airplane or spaceship instruments, transportation instruments, traffic signal instruments, combustion control instruments, medical instruments, all types of safety devices, etc.. Unintended Usage of TOSHIBA products listed in his document shall be made at the customer’s own risk.
- The products described in this document shall not be used or embedded to any downstream products of which manufacture, use and/or sale are prohibited under any applicable laws and regulations.
- The information contained herein is presented only as a guide for the applications of our products. No responsibility is assumed by TOSHIBA for any infringements of patents or other rights of the third parties which may result from its use. No license is granted by implication or otherwise under any patents or other rights of TOSHIBA or the third parties.
- Please contact your sales representative for product-by-product details in this document regarding RoHS compatibility. Please use these products in this document in compliance with all applicable laws and regulations that regulate the inclusion or use of controlled substances. Toshiba assumes no liability for damage or losses occurring as a result of noncompliance with applicable laws and regulations.