FAIRCHILD SEMICONDUCTOR™

April 1984
Revised March 2000

DM74AS27
Triple 3-Input NOR Gate

General Description

This device contains three independent 3-input gates, each of which performs the logic NOR function.

Features

- Switching specifications at 50 pF
- Switching specifications guaranteed over full temperature and V_{CC} range
- Advanced oxide-isolated, ion-implanted Schottky TTL process
- Functionally and pin for pin compatible with Schottky, low power Schottky, and advanced low power Schottky TTL counterpart
- Improved AC performance over Schottky, low power Schottky, and advanced low power Schottky counterparts

Ordering Code:

Order Number	Package Number	Package Description
DM74AS27M	M14A	14-Lead Small Outline Integrated Circuit (SOIC), JEDEC MS-012, 0.150 Narrow
DM74AS27N	N14A	14-Lead Plastic Dual-In-Line Package (PDIP), JEDEC MS-001, 0.300 Wide

Devices also available in Tape and Reel. Specify by appending the suffix letter "X" to the ordering code.

Connection Diagram

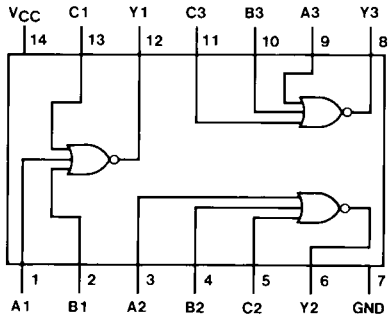

Function Table

$$Y = \overline{A + B + C}$$

Inputs			Output
A	B	C	Y
L	L	L	H
H	X	X	L
X	H	X	L
X	X	H	L

H = HIGH Logic Level
L = LOW Logic Level
X = Either LOW or HIGH Logic Level

© 2000 Fairchild Semiconductor Corporation

Absolute Maximum Ratings (Note 1)

Supply Voltage	7V
Input Voltage	7V
Operating Free Air Temperature Range	0°C to +70°C
Storage Temperature Range	−65°C to +150°C
Typical θ_{JA}	
N Package	84.0°C/W
M Package	114.0°C/W

Note 1: The "Absolute Maximum Ratings" are those values beyond which the safety of the device cannot be guaranteed. The device should not be operated at these limits. The parametric values defined in the Electrical Characteristics tables are not guaranteed at the absolute maximum ratings. The "Recommended Operating Conditions" table will define the conditions for actual device operation.

Recommended Operating Conditions

Symbol	Parameter	Min	Nom	Max	Units
V_{CC}	Supply Voltage	4.5	5	5.5	V
V_{IH}	HIGH Level Input Voltage	2			V
V_{IL}	LOW Level Input Voltage			0.8	V
I_{OH}	HIGH Level Output Current			−2	mA
I_{OL}	LOW Level Output Current			20	mA
T_A	Free Air Operating Temperature	0		70	°C

Electrical Characteristics

over recommended operating free air temperature range. All typical values are measured at $V_{CC} = 5V$, $T_A = 25°C$.

Symbol	Parameter	Conditions		Min	Typ	Max	Units
V_{IK}	Input Clamp Voltage	$V_{CC} = 4.5V$, $I_I = -18$ mA				−1.2	V
V_{OH}	HIGH Level Output Voltage	$I_{OH} = -2$ mA, $V_{CC} = 4.5V$ to 5.5V		$V_{CC} - 2$			V
V_{OL}	LOW Level Output Voltage	$V_{CC} = 4.5V$, $I_{OL} = 20$ mA			0.35	0.5	V
I_I	Input Current at Max Input Voltage	$V_{CC} = 5.5V$, $V_{IH} = 7V$				0.1	mA
I_{IH}	HIGH Level Input Current	$V_{CC} = 5.5V$, $V_{IH} = 2.7V$				20	μA
I_{IL}	LOW Level Input Current	$V_{CC} = 5.5V$, $V_{IL} = 0.4V$				−0.5	mA
I_O	Output Drive Current	$V_{CC} = 5.5V$, $V_O = 2.25V$		−30		−112	mA
I_{CC}	Supply Current	$V_{CC} = 5.5V$	Outputs HIGH		4	6.4	mA
			Outputs LOW		10.6	17.1	mA

Switching Characteristics

over recommended operating free air temperature range

Symbol	Parameter	Conditions	Min	Max	Units
t_{PLH}	Propagation Delay Time LOW-to-HIGH Level Output	$V_{CC} = 4.5V$ to 5.5V, $R_L = 500\Omega$, $C_L = 50$ pF	1	5.5	ns
t_{PHL}	Propagation Delay Time HIGH-to-LOW Level Output		1	4.5	ns

Physical Dimensions inches (millimeters) unless otherwise noted

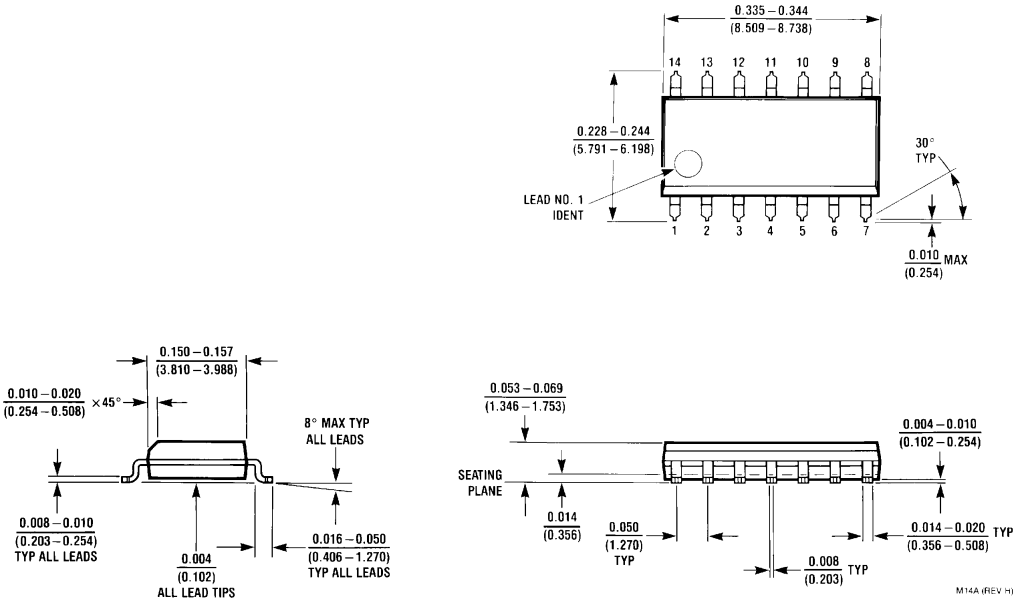

14-Lead Small Outline Integrated Circuit (SOIC), JEDEC MS-012, 0.150 Narrow
Package Number M14A

Physical Dimensions inches (millimeters) unless otherwise noted (Continued)

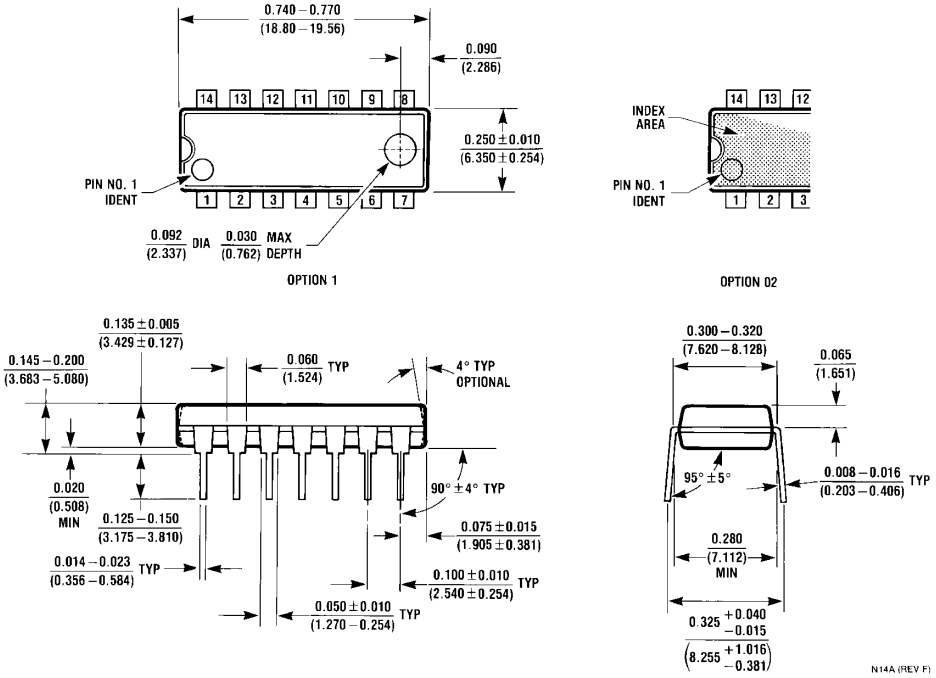

14-Lead Plastic Dual-In-Line Package (PDIP), JEDEC MS-001, 0.300 Wide
Package Number N14A

Fairchild does not assume any responsibility for use of any circuitry described, no circuit patent licenses are implied and Fairchild reserves the right at any time without notice to change said circuitry and specifications.

LIFE SUPPORT POLICY

FAIRCHILD'S PRODUCTS ARE NOT AUTHORIZED FOR USE AS CRITICAL COMPONENTS IN LIFE SUPPORT DEVICES OR SYSTEMS WITHOUT THE EXPRESS WRITTEN APPROVAL OF THE PRESIDENT OF FAIRCHILD SEMICONDUCTOR CORPORATION. As used herein:

1. Life support devices or systems are devices or systems which, (a) are intended for surgical implant into the body, or (b) support or sustain life, and (c) whose failure to perform when properly used in accordance with instructions for use provided in the labeling, can be reasonably expected to result in a significant injury to the user.
2. A critical component in any component of a life support device or system whose failure to perform can be reasonably expected to cause the failure of the life support device or system, or to affect its safety or effectiveness.

www.fairchildsemi.com