High-Speed DMOS Quad FET Analog Switch Arrays

SD5000 / SD5001 / SD5002
SD5400 / SD5401 / SD5402

FEATURES

- **Low PropagatiomTime . . . . . 600 psec**
- **Low On Resistance**
- **Low Insertion Loss**
- **Low Capacitance:**
  - **– Analog Input . . . . . 3.5pF typ.**
  - **– Input (Gate) . . . . . 2.4pF typ.**
  - **– Output . . . . . 1.3pF typ.**
  - **– Feedback. . . . . 0.3pF typ.**
- **Low Crosstalk . . . . . -107dB @ 3kHz**
- **Bidirectional Operation**

APPLICATIONS

- **Analog Switching**
- **Audio Routing**
- **Sample & Hold**
- **Crosspoint Switches**
- **Choppers**
- **Video Switches**

DESCRIPTION

The SD5000 Series are monolithic arrays of four bidirectional, high performance analog switches manufactured with implanted high-speed, high-voltage and low resistance double-difused MOS (DMOS) process. The maximum threshold of 2V permits simple TTL and CMOS driving in small signal applications.

ORDERING INFORMATION

Part	Package	Temperature Range
SD5000N	Plastic DIP Package	-55°C to +150°C
SD5001N	Plastic DIP Package	-55°C to +150°C
SD5002N	Plastic DIP Package	-55°C to +150°C
XSD5000	Sorted Chips in Carriers	-55°C to +150°C
XSD5001	Sorted Chips in Carriers	-55°C to +150°C
XSD5002	Sorted Chips in Carriers	-55°C to +150°C
SD5400CY	SOIC-14	-55°C to +150°C
SD5401CY	SOIC-14	-55°C to +150°C
SD5402CY	SOIC-14	-55°C to +150°C
XSD5400	Sorted Chips in Carriers	-55°C to +150°C
XSD5401	Sorted Chips in Carriers	-55°C to +150°C
XSD5402	Sorted Chips in Carriers	-55°C to +150°C

FUNCTIONAL BLOCK DIAGRAM

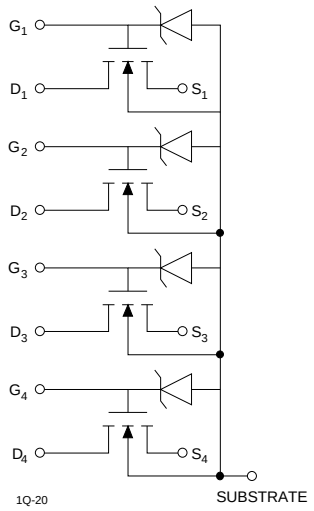

SOIC PIN CONFIGURATION

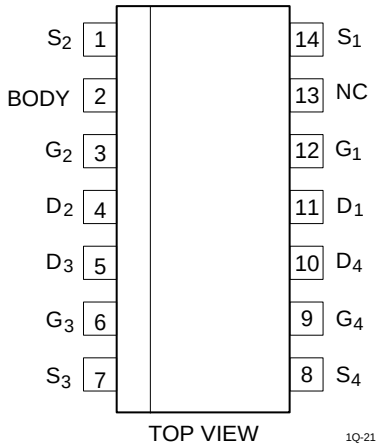

DUAL IN LINE PACKAGE (PDIP)

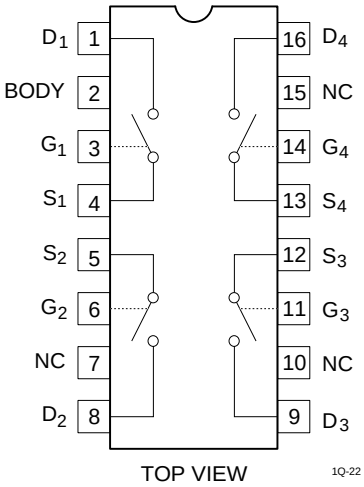

DC ELECTRICAL CHARACTERISTICS $T_A = 25^oC$

SYMBOL	PARAMETERS	SD5000/SD5400			SD5001/SD5401			SD5002/SD5402			UNITS	CONDITIONS
		MIN	TYP	MAX	MIN	TYP	MAX	MIN	TYP	MAX		
V_{analog}	Analog Signal Range	-10		+10	-5		+5	-7.5		+7.5	V	
Breakdown Voltage												
BV_{DS} BV_{SD} BV_{DB} BV_{SB}	Drain-Source Source-Drain Drain-Body Source-Body	20 20 25 25	25		10 10 15 15	25		15 15 22.5 22.5	25		V	$V_{GS} = V_{BS} = -5V$, $I_D = 10nA$ $V_{GD} = V_{BD} = -5V$, $I_S = 10nA$ $V_{GB} = 0V$, $I_D = 10nA$ Source Open $V_{GB} = 0V$, $I_S = 10\mu A$, Drain Open
Leakage Current - SD5000/SD5400												
$I_{DS(OFF)}$ $I_{SD(OFF)}$ I_{GBS}	Drain-Source Source-Drain Gate		1.0 1.0	10.0 10.0 1.0							nA nA µA	$V_{GS} = V_{BS} = -5V$, $V_{DS} = 20V$ $V_{GD} = V_{BD} = -5V$, $V_{SD} = 20V$ $V_{DB} = V_{SB} = 0V$, $V_{GB} = 30V$
Leakage Current - SD5001/SD5401												
$I_{DS(OFF)}$ $I_{SD(OFF)}$ I_{GBS}	Drain-Source Source-Drain Gate					1.0 1.0	10.0 10.0 1.0				nA nA µA	$V_{GS} = V_{BS} = -5V$, $V_{DS} = 10V$ $V_{GD} = V_{BD} = -5V$, $V_{SD} = 10V$ $V_{DB} = V_{SB} = 0V$, $V_{GB} = 25V$
Leakage Current - SD5002/SD5402												
$I_{DS(OFF)}$ $I_{SD(OFF)}$ I_{GBS}	Drain-Source Source-Drain Gate								1.0 1.0	10.0 10.0 1.0	nA nA µA	$V_{GS} = V_{BS} = -5V$, $V_{DS} = 15V$ $V_{GD} = V_{BD} = -5V$, $V_{SD} = 15V$ $V_{DB} = V_{SB} = 0V$, $V_{GB} = 30V$
V_T	Threshold Voltage	0.1	1.0	2.0	0.1	1.0	2.0	0.1	1.0	2.0	V	$V_{DS} = V_{GS} = V_T$, $V_{SB} = 0V$, $I_D = 1\mu A$
$R_{DS(ON)}$	Drain-Source ON Resistance		50 30 23 19	70		50 30 23 19	70		50 30 23 19	70	Ω	$V_{GS} = 5V$, $V_{SB} = 0V$, $I_D = 1mA$ $V_{GS} = 10V$, $V_{SB} = 0V$, $I_D = 1mA$ $V_{GS} = 15V$, $V_{SB} = 0V$, $I_D = 1mA$ $V_{GS} = 20V$, $V_{SB} = 0V$, $I_D = 1mA$
$R_{DS(ON)}$	Match ON Resiatance		1	5		1	5		1	5	Ω	$V_{GS} = 5V$

AC ELECTRICAL CHARACTERISTICS $T_A = 25^oC$

SYMBOL	PARAMETER	MIN	TYP	MAX	UNITS	CONDITIONS
g_{fs}	Forward Transconductance	10	12		mS	$V_{DS} = 10V$, $I_D = 20mA$, $V_{SB} = 0V$, f = 1kHz
Capacitances						
C_G C_D C_S C_{DG}	Gate Node Drain Node Source Node Reverse Transfer		2.4 1.3 3.5 0.3	3.5 1.5 4.0 0.5	pF	$V_{DS} = 10V$, f = 1MHz, $V_{GS} = V_{BS} = -15V$
C_T	Crosstalk		107.0		dB	f = 3kHz, $R_G = 600\Omega$

SWITCHING CHARACTERISTICS $T_A = 25^oC$

SYMBOL	PARAMETER	MIN	TYP	MAX	UNITS	CONDITIONS
$t_{d(ON)}$	Turn-On Time		0.7	1.0	nsec	$R_L = 680\Omega$, $R_G = 51$ $V_{DD} = 5V$ $V_{G(ON)} = 10V$
t_r	Rise Time		0.8	1.0		
t_{OFF*}	Turn-Off Time		10.0			

*t_{OFF} is dependent on RL and C and does not depend on the device characteristics.

ABSOLUTE MAXIMUM RATINGS

SYMBOL	PARAMETER	SD5000/SD5400 MAX. VALUE	SD5001/SD5401 MAX. VALUE	SD5002/SD5402 MAX. VALUE	UNITS
Breakdown Voltage					
V_{DS}	Drain-Source	20	10	15	V
V_{SD}	Source-Drain	20	10	15	
V_{DB}	Drain-Body	25	15	22.5	
V_{SB}	Source-Body	25	15	22.5	
V_{GS}	Gate-Source	30/ - 25	25/ - 15	30/ - 22.5	
V_{GB}	Gate-Body	30/ - 0.3	25/ - 0.3	30/ - 0.3	
V_{GD}	Gate-Drain	30/ - 25	30/ - 15	30/ - 22.5	

ABSOLUTE MAXIMUM

SYMBOL	PARAMETER	VALUE	UNIT
I_D	Drain Current	50	mA
Temperature Range			
T_J	Operating	-55 to +85	^oC
T_S	Storage	-55 to +150	
Power Dissipation			
P_D	Package	640 (Ni\ote 1)	mW
P_D	Each Device	300 (Note 2)	

Note 1: Linear Derating Factor - 10.7mW/^{o}C above 25°C
Note 2: Linear Derating Factor - 5.0mW/^{o}C above 25°C