RJ45 DUAL USB JACK WITH 10/100 MAGNETIC

RoHS Compliant

FEATURES

- LAN interface suitable for 10/100Base-TX applications
- RJ45/USB stacked design saves on PCB real estate
- USB module complies with USB 2.0 standards and meets CAT5 Fast Ethernet industry standard
- Magnetics are 100% electrically tested for HI-POT and continuity
- Meets or exceeds IEEE 802.3 and ANSI X3.263 standards including 350 µH minimum OCL with 8 mA bias

ELECTRICAL SPECIFICATIONS @25℃-Operating temperature 0℃ TO 70℃

Part Number	Data Rate	Turns Ratio		LEDs	Insertion Loss TX/RX (dB MAX)	Return Loss @100Ω±15Ω (dB TYP)			Crosstalk (dB MIN)			Common Mode Rejection (dB TYP)		Hipot (Vrms)
		TX	RX	L/R	1-65 MHz	1-10 MHz	30 MHz	60-80 MHz	1-10 MHz	32-60 MHz	60-100 MHz	1-50 MHz	50-130 MHz	@60Hz
RJ44-101DYD2	10/100	1CT:1	1CT:1CT	G-O/Y	-1.0	-20	-16	-12	-40	-35	-30	-30	-20	1500

Mechanicals

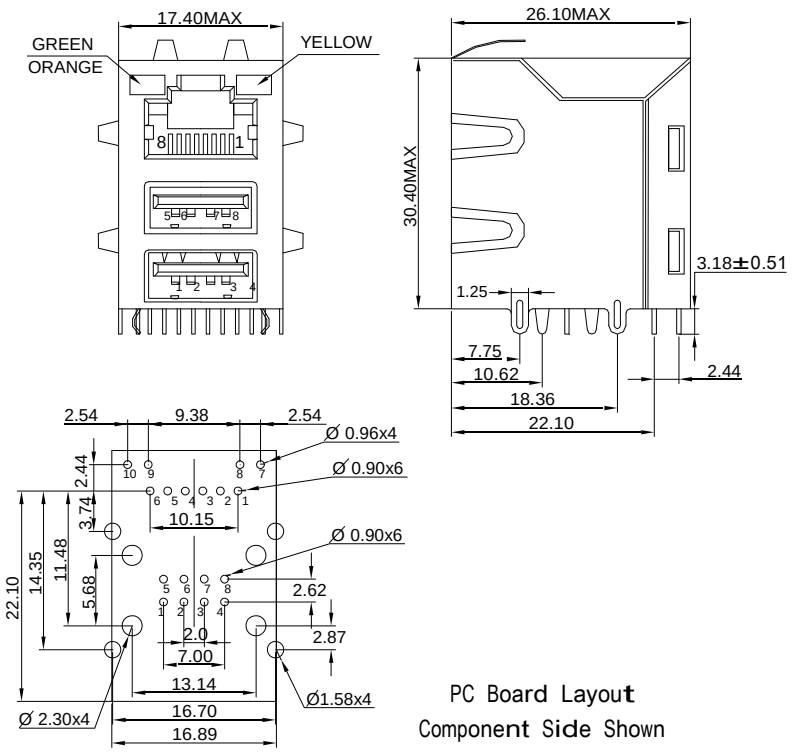

UNIT:mm Unless otherwise specified,all tolerances are ±0.25

Schematics

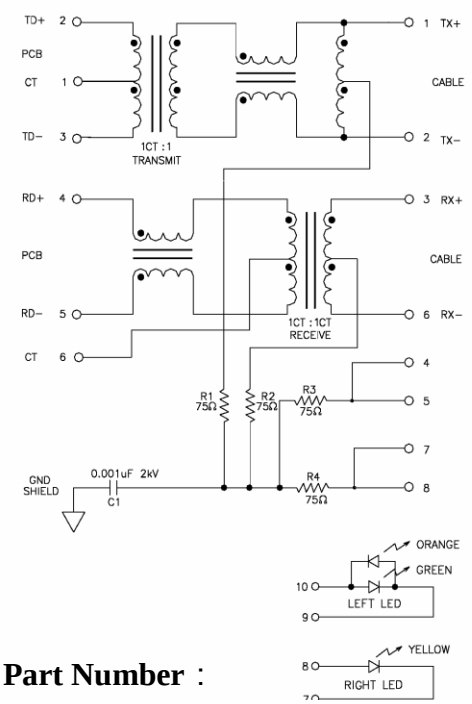

Part Number :

RJ44- 101 DYD 2

A B C D

A:Series
B:Schematics
C:Led
D:Gold Plating:1=3u",2=6u",3=15u",4=30u"5=50u"