PulseJack™
Low Profile 1x1 Tab-Up

Description:

100/1000Base-T RJ45 single port (1x1) Tab-UP integrated magnetics connector, designed to support applications such as Network Interface Cards (NIC), LAN-on-Motherboard (LOM), and PC applications.

Features and Benefits:

- *Compliant with IEEE 802.3 standard*
- *350µH minimum OCL with 8mA bias current*
- *High performance for maximum EMI suppression*
- *Low height and small footprint to minimize board space*
- *RoHS peak wave solder temperature rating 260°C*

Electrical Specifications @ 25°C - Operating Temperature 0°C to +70°C

Part Number	Speed	Side EMI Tabs	Insertion Loss TX/RX (dB)	Return Loss (dB TYP) 100Ω (±15Ω)				Crosstalk (dB TYP)			Common Mode Rejection (dB TYP)	Hipot (MIN)
			1-100 MHz	1-10 MHz	30 MHz	60-80 MHz	80-100 MHz	1-10 MHz	32-65 MHz	65-100 MHz	1-125 MHz	@ 60Hz 1 MIN
J0G-0001NL	1000Base-T	Horizontal	-1.2	-18	-18	-12	-10	-40	-35	-30	-30	1500Vrms
J0G-0003NL	1000Base-T	No Tabs	-1.0	-18	-18	-12	-10	-40	-35	-30	-30	1500Vrms
J0G-0007NL	100Base-TX	Horizontal	-1.0	-18	-18	-12	-10	-40	-35	-30	-30	1500Vrms
J0G-0009NL	1000Base-T	Vertical	-1.0	-18	-18	-12	-10	-40	-35	-30	-30	1500Vrms

Notes:

1. LEDs Left/Right: **G** = green; **Y** = yellow; **Y-G** = Bicolor.

2. J0G-0003NL is supplied without EMI tabs; refer to mechanical drawing (page 5) for explanation of EMI tabs.

RJ45 Durability Test Rating

Part Number	Mating Force (MAX)	Unmating Force (MAX)	Durability	Plug to Jack Retention (MIN)
J0G Series	5 lbs./2.268 kgs.	5 lbs./2.268 kgs.	750 Insertions	20 lbs./9.072 kgs.

RJ45 Material Specification

Part Number	Shield		Contact			Housing		MSL [2] Rating
	Material	Finish	Material	Plating Area	Solder Area	Material	Specification	
J0G Series	Brass	20-40µ inches thick nickel over brass	Phosphor Bronze	15µ inches gold over 30-80µ inches nickel	Tin matte finish over nickel	Thermoplastic	UL 94 V-0	1

Notes:

1. Connector dimensions comply with FCC dimension requirements.

2. MSL - Moisture Sensitivity Level class limits = 1 to 5 (Highest: 1; Lowest: 5)

Schematics

J0G-0001NL / J0G-0003NL

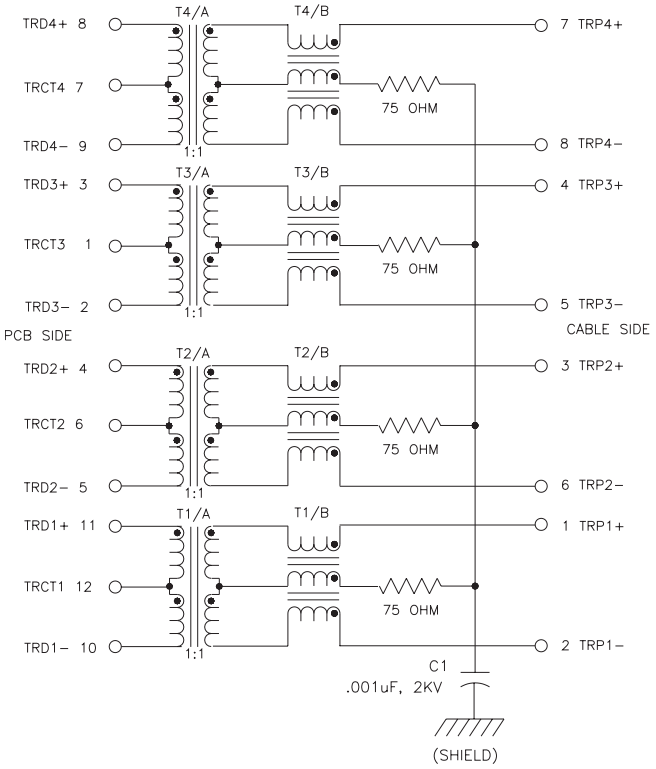

J0G-0007NL

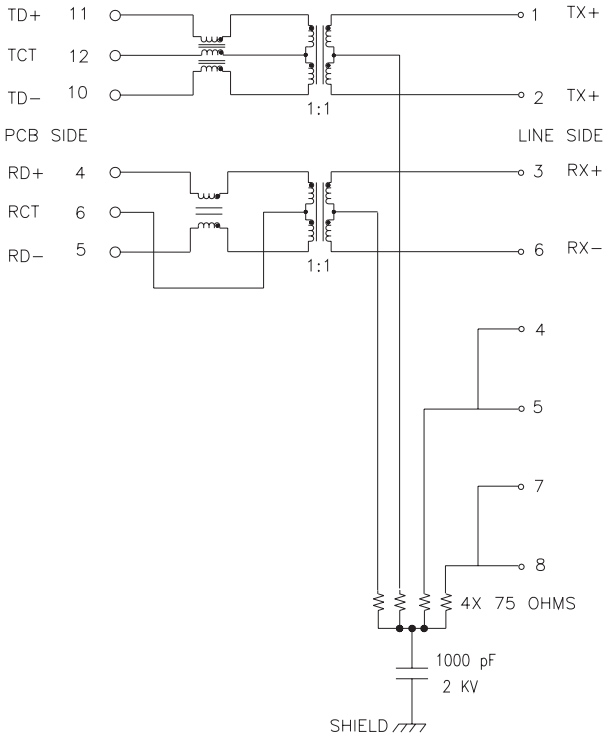

J0G-0009NL

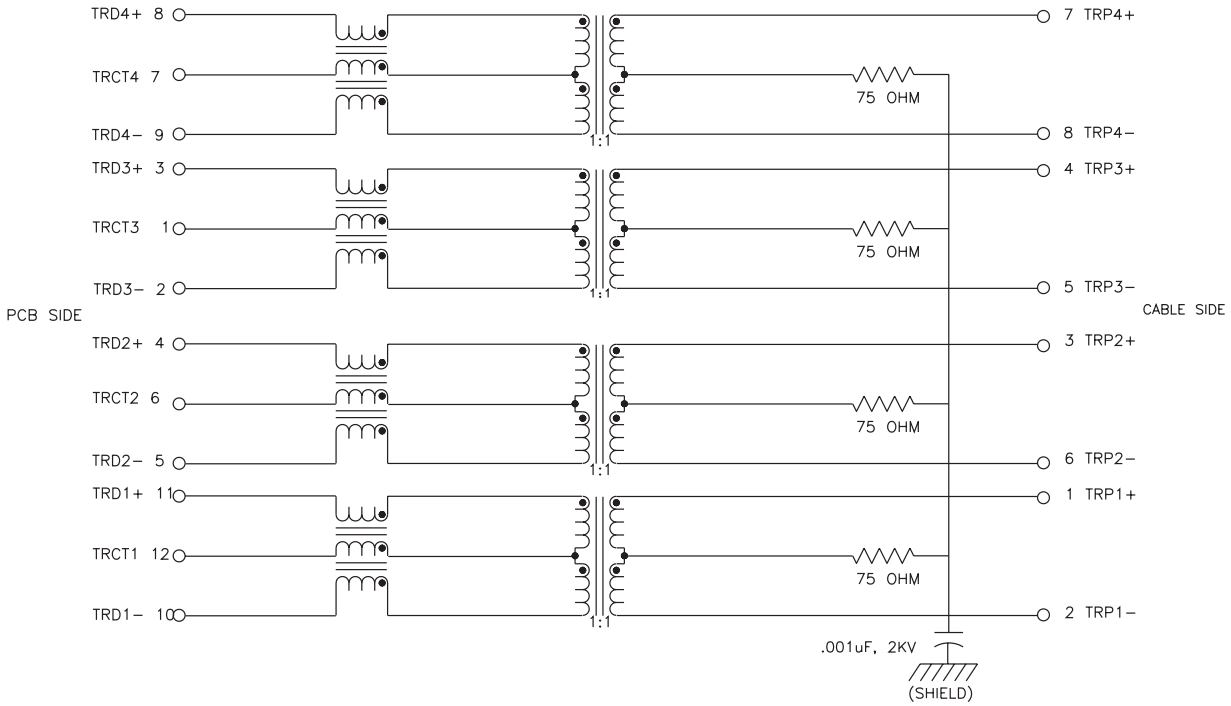

PulseJack™
Low Profile 1x1 Tab-Up

Pin Assignments

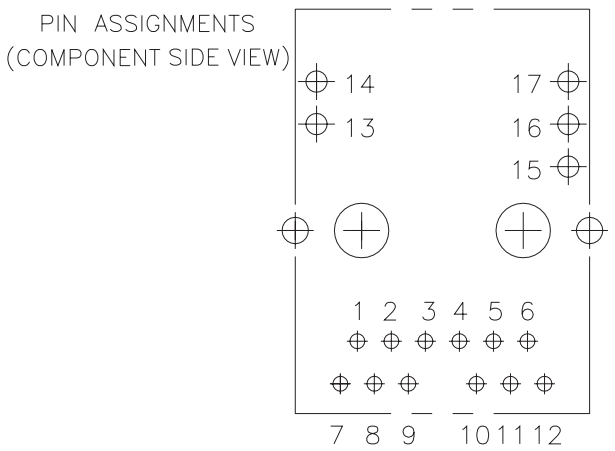

LED Configuration

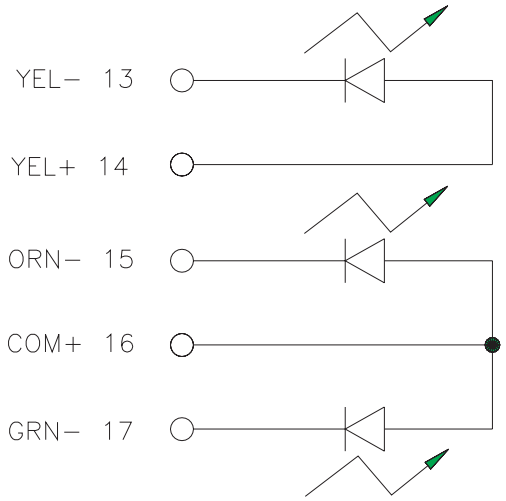

J0G-0001NL

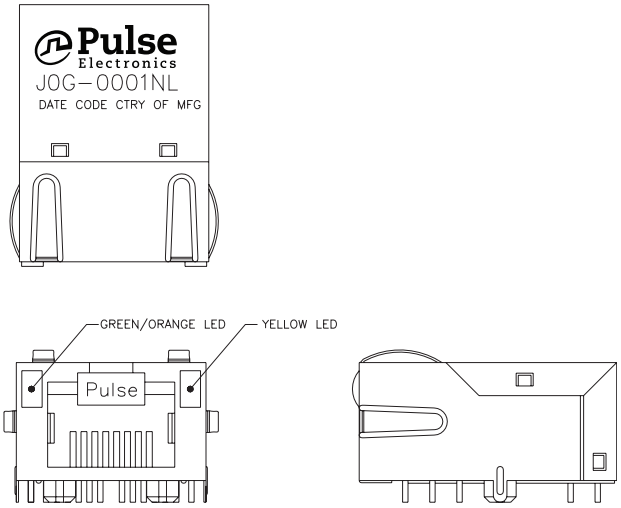

J0G-0009NL

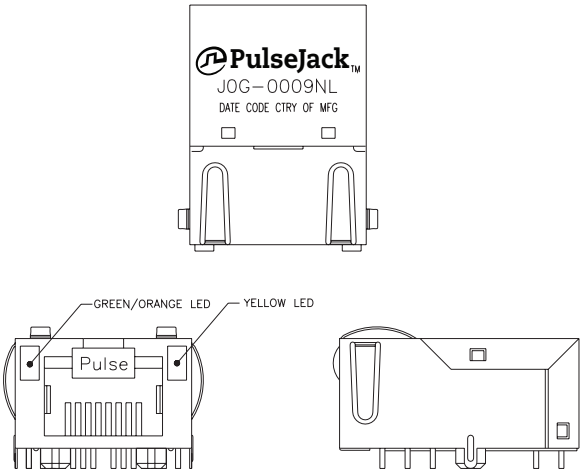

J0G-0003NL

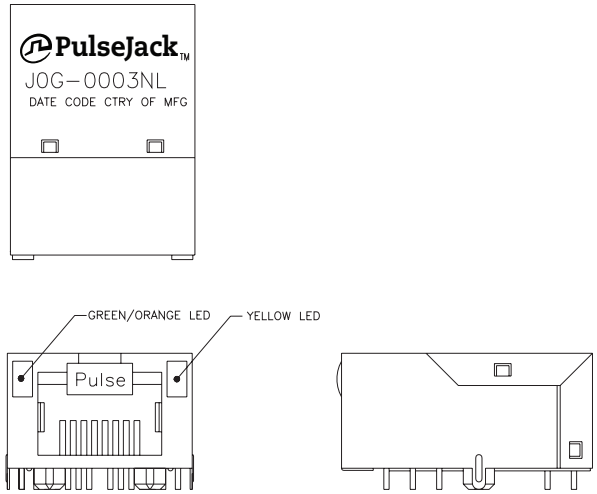

J0G-0007NL

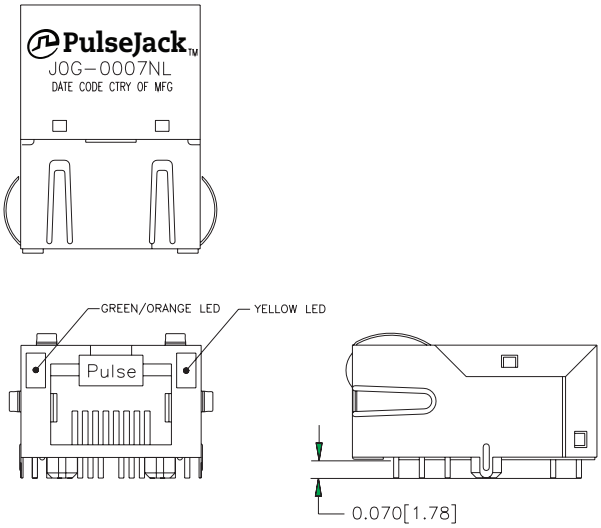

Mechanicals

J0G-0001NL / 0003NL / 0007NL / 0009NL

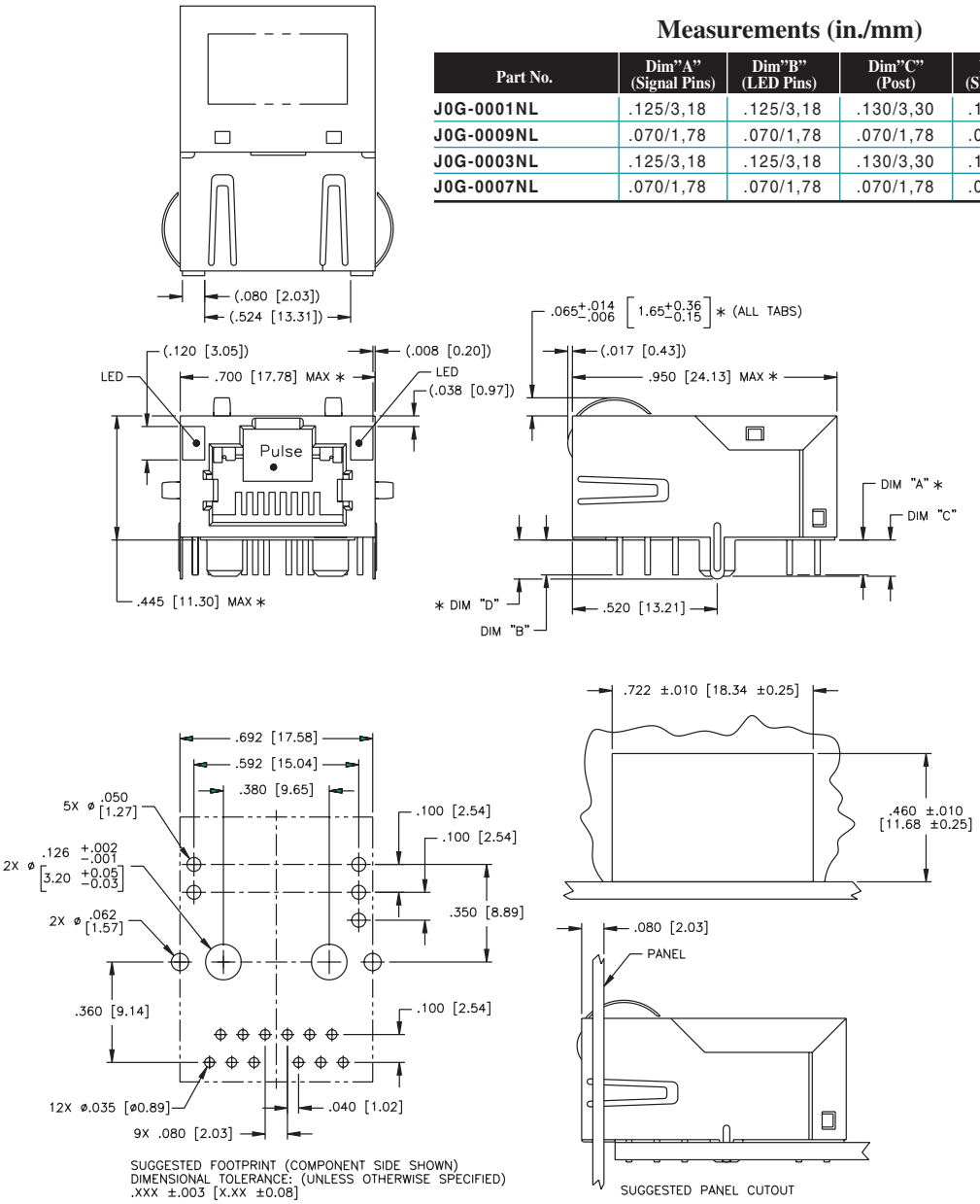

Measurements (in./mm)

Part No.	Dim"A" (Signal Pins)	Dim"B" (LED Pins)	Dim"C" (Post)	Dim"D" (Shield Tab)	EMI Tab Config.
J0G-0001NL	.125/3,18	.125/3,18	.130/3,30	.140/3,56	Fig.1
J0G-0009NL	.070/1,78	.070/1,78	.070/1,78	.070/1,78	Fig.2
J0G-0003NL	.125/3,18	.125/3,18	.130/3,30	.140/3,56	Fig.3
J0G-0007NL	.070/1,78	.070/1,78	.070/1,78	.070/1,78	Fig.1

EMI Tabs Configuration

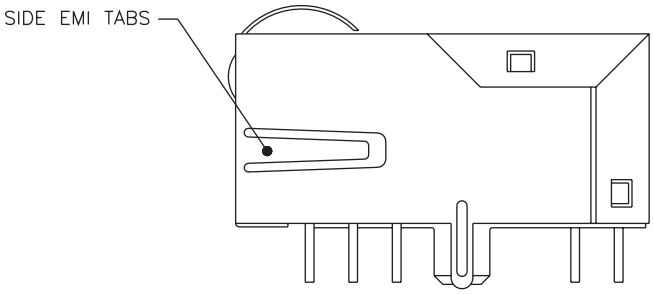

FIGURE 1 (HORIZONTAL SIDE EMI TABS)

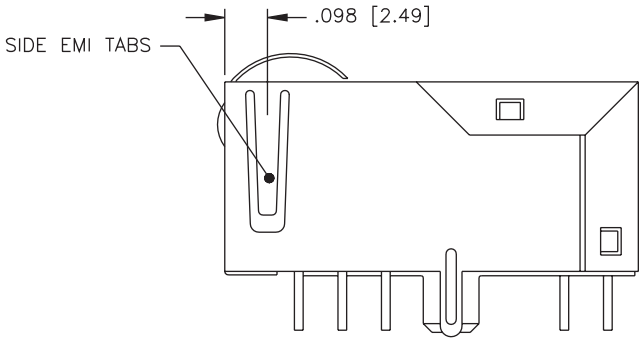

FIGURE 2 (VERTICAL SIDE EMI TABS)

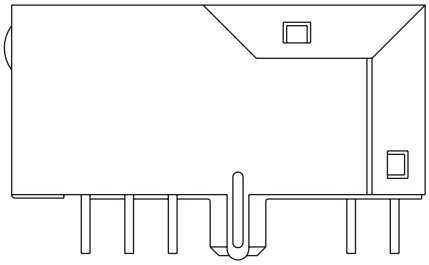

FIGURE 3 (NO EMI TABS)

For More Information

Pulse Worldwide Headquarters
12220 World Trade Drive
San Diego, CA
92128
U.S.A.

Tel: 858 674 8100

Pulse Europe
Einsteinstrasse 1
D-71083 Herrenberg
Germany

Tel: 49 7032 7806

Pulse China Headquarters
B402, Shenzhen Academy of Aerospace Technology Bldg.
10th Kejinan Road
High-Tech Zone
Nanshan District
Shenzen, PR China
518057

Pulse North China
Room 2704/2705
Super Ocean Finance Ctr.
2067 Yan An Road West
Shanghai 200336
China

Pulse South Asia
135 Joo Seng Road
#03-02
PM Industrial Bldg.
Singapore 368363

Tel: 65 6287 8998
Fax: 65 6287 8998

Pulse North Asia
3F, No. 198
Zhongyuan Road
Zhongli City
Taoyuan County 320
Taiwan R. O. C.
Tel: 886 3 4356768
Fax: 886 3 4356823
(Pulse)

Performance warranty of products offered on this data sheet is limited to the parameters specified. Data is subject to change without notice. Other brand and product names mentioned herein may be trademarks or registered trademarks of their respective owners. © Copyright, 2011. Pulse Electronics, Inc. All rights reserved.