SCANSTA111 Enhanced SCAN Bridge Multidrop Addressable IEEE 1149.1 (JTAG) Port

Check for Samples: SCANSTA111

FEATURES

- **True IEEE 1149.1 Hierarchical and Multidrop Addressable Capability**
- **The 7 Slot Inputs Support Up to 121 Unique Addresses, an Interrogation Address, Broadcast Address, and 4 Multi-Cast Group Addresses (Address 000000 is Reserved)**
- **3 IEEE 1149.1-Compatible Configurable Local Scan Ports**
- **Mode Register$_0$ Allows Local TAPs to be Bypassed, Selected for Insertion Into the Scan Chain Individually, or Serially in Groups of Two or Three**
- **Transparent Mode can be Enabled with a Single Instruction to Conveniently Buffer the Backplane IEEE 1149.1 Pins to those on a Single Local Scan Port**
- **LSP ACTIVE Outputs Provide Local Port Enable Signals for Analog Busses Supporting IEEE 1149.4.**
- **General Purpose Local Port Pass-Through Bits are Useful for Delivering Write Pulses for FPGA Programming or Monitoring Device Status.**
- **Known Power-Up State**
- **$\overline{\text{TRST}}$ on All Local Scan Ports**
- **32-Bit TCK Counter**
- **16-Bit LFSR Signature Compactor**
- **Local TAPs can become TRI-STATE via the $\overline{\text{OE}}$ Input to Allow an Alternate Test Master to Take Control of the Local TAPs (LSP$_{0\text{-}2}$ Have a TRI-STATE Notification Output)**
- **3.0-3.6V V_{CC} Supply Operation**
- **Power-Off High Impedance Inputs and Outputs**
- **Supports Live Insertion/Withdrawal**

DESCRIPTION

The SCANSTA111 extends the IEEE Std. 1149.1 test bus into a multidrop test bus environment. The advantage of a multidrop approach over a single serial scan chain is improved test throughput and the ability to remove a board from the system and retain test access to the remaining modules. Each SCANSTA111 supports up to 3 local IEEE 1149.1 scan rings which can be accessed individually or combined serially. Addressing is accomplished by loading the instruction register with a value matching that of the Slot inputs. Backplane and inter-board testing can easily be accomplished by parking the local TAP Controllers in one of the stable TAP Controller states via a Park instruction. The 32-bit TCK counter enables built in self test operations to be performed on one port while other scan chains are simultaneously tested.

Please be aware that an important notice concerning availability, standard warranty, and use in critical applications of Texas Instruments semiconductor products and disclaimers thereto appears at the end of this data sheet.

All trademarks are the property of their respective owners.

PRODUCTION DATA information is current as of publication date. Products conform to specifications per the terms of the Texas Instruments standard warranty. Production processing does not necessarily include testing of all parameters.

Copyright © 2001–2013, Texas Instruments Incorporated

CONNECTION DIAGRAM

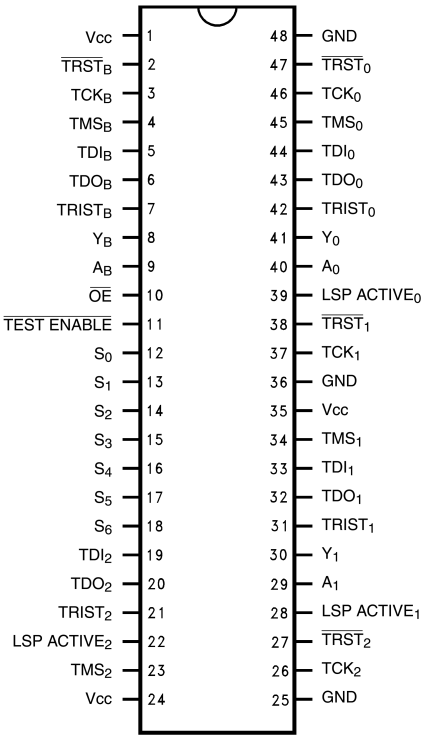

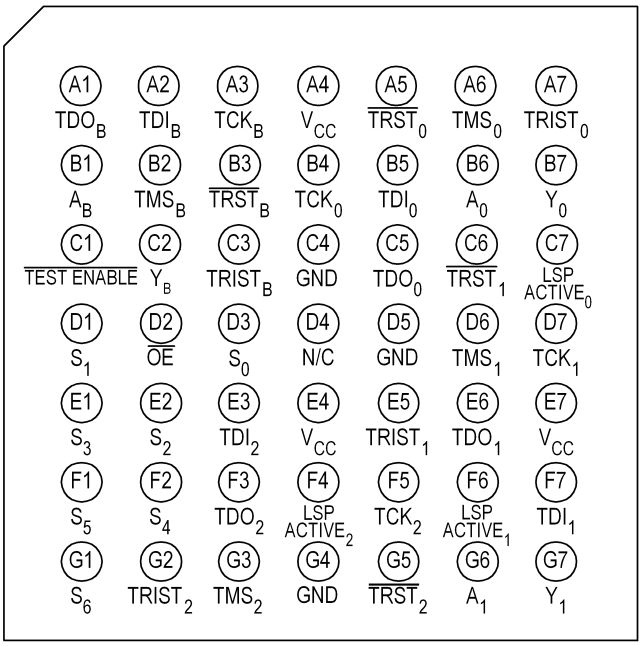

Table 1. Glossary

LFSR	Linear Feedback Shift Register. When enabled, will generate a 16-bit signature of sampled serial test data.
LSP	Local Scan Port. A four signal port that drives a local (i.e. non-backplane) scan chain. (e.g., TCK_0, TMS_0, TDO_0, TDI_0).
Local	Local is used to describe IEEE Std. 1149.1 compliant scan rings and the SCANSTA111 Test Access Port that drives them. The term local was adopted from the system test architecture that the 'STA111 will most commonly be used in; namely, a system test backplane with a 'STA111 on each card driving up to 3 local scan rings per card. (Each card can contain multiple 'STA111s, with 3 local scan ports per 'STA111.)
Park/Unpark/Unparked	Parked, unpark, and unparked, are used to describe the state of the LSP controller and the state of the local TAP controllers (the local TAP controllers refers to the TAP controllers of the scan components that make up a local scan ring). Park is also used to describe the action of parking a LSP (transitioning into one of the Parked LSP controller states). It is important to understand that when a LSP controller is in one of the parked states, TMS_n is held constant, thereby holding or parking the local TAP controllers in a given state.
TAP	Test Access Port as defined by IEEE Std. 1149.1.
Selected/Unselected	Selected and Unselected refers to the state of the 'STA111 Selection Controller. A selected 'STA111 has been properly addressed and is ready to receive Level 2 protocol. Unselected 'STA111s monitor the system test backplane, but do not accept Level 2 protocol (except for the *GOTOWAIT* instruction). The data registers and LSPs of unselected 'STA111s are not accessible from the system test master.
Active Scan Chain	The Active Scan Chain refers to the scan chain configuration as seen by the test master at a given moment. When a 'STA111 is selected with all of its LSPs parked, the active scan chain is the current scan register only. When a LSP is unparked, the active scan chain becomes: TDI_B → the current 'STA111 register → the local scan ring registers → a PAD bit → TDO_B. Refer to Table 6 for Unparked configurations of the LSP network.
Level 1 Protocol	Level 1 is the protocol used to address a 'STA111.
Level 2 Protocol	Level 2 is the protocol that is used once a 'STA111 is selected. Level 2 protocol is IEEE Std. 1149.1 compliant when an individual 'STA111 is selected.
PAD	A one bit register that is placed at the end of each local scan port scan-chain. The PAD bit eliminates the prop delay that would be added by the 'STA111 LSPN logic between TDI_n and $TDO_{(n+1)}$ or TDO_B by buffering and synchronizing the LSP TDI inputs to the falling edge of TCK_B, thus allowing data to be scanned at higher frequencies without violating setup and hold times.
LSB	Least Significant Bit, the right-most position in a register (bit 0).
MSB	Most Significant Bit, the left-most position in a register.

Copyright © 2001–2013, Texas Instruments Incorporated

ARCHITECTURE

Figure 1 shows the basic architecture of the 'STA111. The device's major functional blocks are illustrated here. The TAP Controller, a 16-state state machine, is the central control for the device. The instruction register and various test data registers can be scanned to exercise the various functions of the 'STA111 (these registers behave as defined in IEEE Std. 1149.1). The 'STA111 selection controller provides the functionality that allows the 1149.1 protocol to be used in a multi-drop environment. It primarily compares the address input to the slot identification and enables the 'STA111 for subsequent scan operations. The Local Scan Port Network (LSPN) contains multiplexing logic used to select different port configurations. The LSPN control block contains the Local Scan Port Controllers (LSPC) for each Local Scan Port (LSP_0, LSP_1 ... LSP_n). This control block receives input from the 'STA111 instruction register, mode registers, and the TAP controller. Each local port contains all four boundary scan signals needed to interface with the local TAPs plus the optional Test Reset signal (TRST).

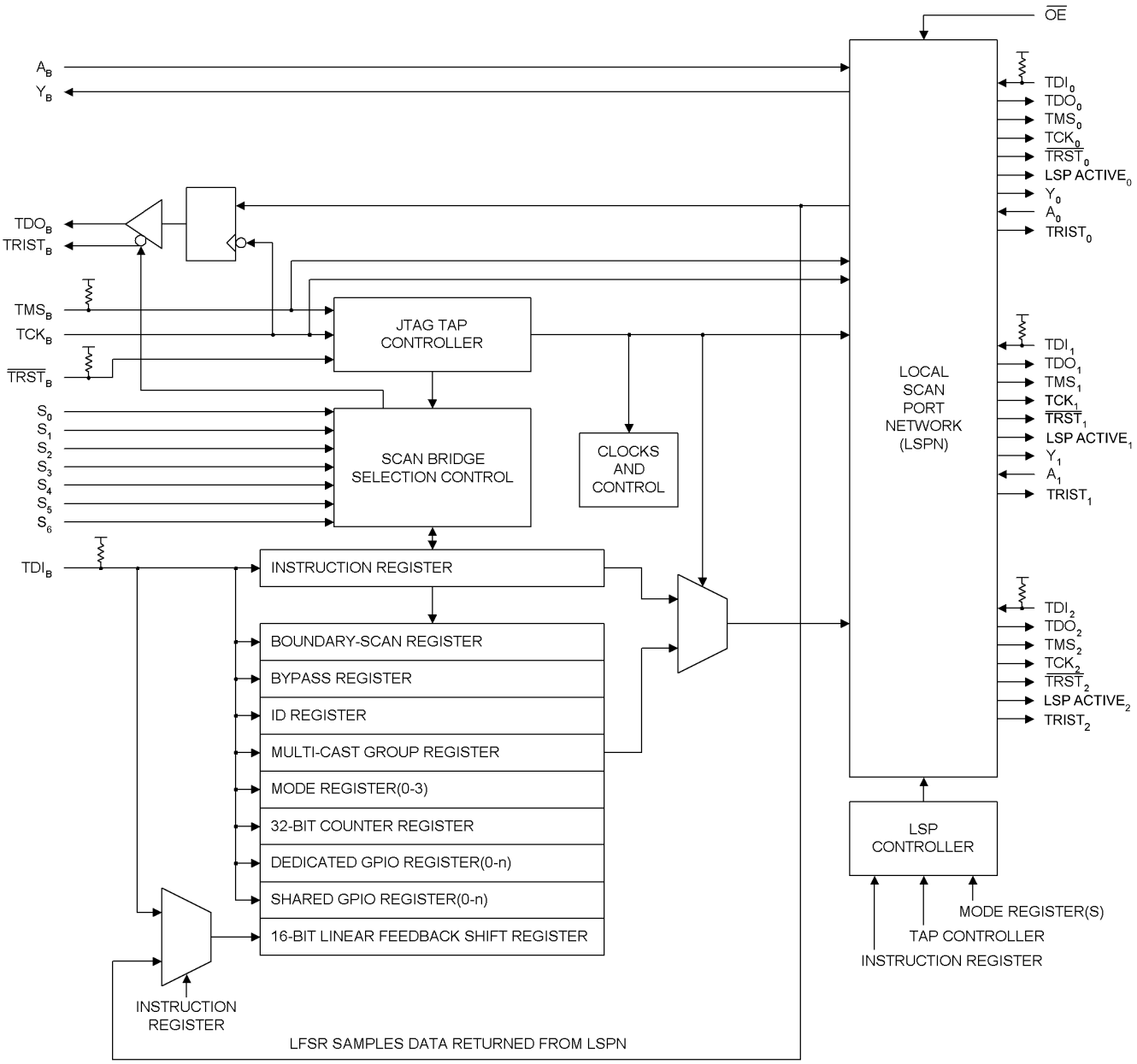

Figure 1. SCANSTA111 Block Diagram

PIN DESCRIPTIONS

Pin Name	No. Pins	I/O	Description
VCC	3	N/A	Power
GND	3	N/A	Ground
TMS_B	1	I	BACKPLANE TEST MODE SELECT: Controls sequencing through the TAP Controller of the 'STA111. Also controls sequencing of the TAPs which are on the local scan chains. This input has a 25KΩ pull-up resistor and no ESD clamp diode (ESD is controlled with an alternate method). When the device is power-off (V_{DD} floating), this input appears to be a capacitive load to ground(1). When V_{DD} = 0V (i.e.; not floating but tied to V_{SS}) this input appears to be a capacitive load with the pull-up to ground.
TDI_B	1	I	BACKPLANE TEST DATA INPUT: All backplane scan data is supplied to the 'STA111 through this input pin. This input has a 25KΩ pull-up resistor and no ESD clamp diode (ESD is controlled with an alternate method). When the device is power-off (V_{DD} floating), this input appears to be a capacitive load to ground(1). When V_{DD} = 0V (i.e.; not floating but tied to V_{SS}) this input appears to be a capacitive load with the pull-up to ground.
TDO_B	1	O	BACKPLANE TEST DATA OUTPUT: This output drives test data from the 'STA111 and the local TAPs, back toward the scan master controller. This output has 24mA of drive current. When the device is power-off (V_{DD} = 0V or floating), this output appears to be a capacitive load(1).
TCK_B	1	I	TEST CLOCK INPUT FROM THE BACKPLANE: This is the master clock signal that controls all scan operations of the 'STA111 and of the local scan ports. This input has no pull-up resistor and no ESD clamp diode (ESD is controlled with an alternate method). When the device is power-off (V_{DD} floating), this input appears to be a capacitive load to ground(2). When V_{DD} = 0V (i.e.; not floating but tied to V_{SS}) this input appears to be a capacitive load to ground.
$\overline{TRST}_B$	1	I	TEST RESET: An asynchronous reset signal (active low) which initializes the 'STA111 logic. This input has a 25KΩ pull-up resistor and no ESD clamp diode (ESD is controlled with an alternate method). When the device is power-off (V_{DD} floating), this input appears to be a capacitive load to ground(2). When V_{DD} = 0V (i.e.; not floating but tied to V_{SS}) this input appears to be a capacitive load with the pull-up to ground.
$TRIST_{(B,0-2)}$	4	O	TRI-STATE NOTIFICATION OUTPUT: This signal is asserted high when the associated TDO is TRI-STATEd. Associated means $TRIST_B$ is for TDO_B, $TRIST_1$ is for TDO_1, etc. This output has 12mA of drive current.
A_B	1	I	BACKPLANE PASS-THROUGH INPUT: A general purpose input which is driven to the Y_n of a single selected LSP. (Not available when multiple LSPs are selected). This input has an internal pull-up resistor.
Y_B	1	O	BACKPLANE PASS-THROUGH OUTPUT: A general purpose output which is driven from the A_n of a single selected LSP. (Not available when multiple LSPs are selected). This output has 24mA of drive current.
$S_{(0-6)}$	7	I	SLOT IDENTIFICATION: The configuration of these pins is used to identify (assign a unique address to) each 'STA111 on the system backplane .
$\overline{OE}$	1	I	OUTPUT ENABLE for the Local Scan Ports, active low. When high, this active-low control signal TRI-STATEs all local scan ports on the 'STA111, to enable an alternate resource to access one or more of the three local scan chains.
$TDO_{(0-2)}$	3	O	TEST DATA OUTPUTS: Individual output for each of the local scan ports . These outputs have 24mA of drive current.
$TDI_{(0-2)}$	3	I	TEST DATA INPUTS: Individual scan data input for each of the local scan ports .
$TMS_{(0-2)}$	3	O	TEST MODE SELECT OUTPUTS: Individual output for each of the local scan ports. TMS_n does not provide a pull-up resistor (which is assumed to be present on a connected TMS input, per the IEEE 1149.1 requirement) . These outputs have 24mA of drive current.
$TCK_{(0-2)}$	3	O	LOCAL TEST CLOCK OUTPUTS: Individual output for each of the local scan ports. These are buffered versions of TCK_B . These outputs have 24mA of drive current.
$\overline{TRST}_{(0-2)}$	3	O	LOCAL TEST RESETS: A gated version of $\overline{TRST}_B$. These outputs have 24mA of drive current.
$A_{(0-1)}$	2	I	LOCAL PASS-THROUGH INPUTS: General purpose inputs which can be driven to the backplane pin Y_B. (Only on LSP_0 and LSP_1. Only available when a single LSP is selected) . These inputs have an internal pull-up resistor.
$Y_{(0-1)}$	2	O	LOCAL PASS-THROUGH OUTPUT: General purpose outputs which can be driven from the backplane pin A_B. (Only on LSP_0 and LSP_1. Only available when a single LSP is selected) . These outputs have 24mA of drive current.

(1) Refer to the IBIS model on our website for I/O characteristics.
(2) Refer to the IBIS model on our website for I/O characteristics.

Copyright © 2001–2013, Texas Instruments Incorporated

PIN DESCRIPTIONS (continued)

Pin Name	No. Pins	I/O	Description
LSP_ACTIVE$_{(0-2)}$	3	O	LOCAL ANALOG TEST BUS ENABLE: These analog pins serve as enable signals for analog busses supporting the IEEE 1149.4 Mixed-Signal Test Bus standard , or for backplane physical layer changes (therefore; TTL to LVDS). These outputs have 12mA of drive current.
TRIST$_{(0-2)}$	3	O	LOCAL TRI-STATE NOTIFICATION OUTPUTS: This signal is high when the local scan ports are TRI-STATEd . These pins are used for backplane physical layer changes (i.e.; TTL to LVDS). These outputs have 12mA of drive current.
$\overline{\text{TEST ENABLE}}$	1	I	TEST ENABLE INPUT: This pin is used for factory test and should be tied to V_{CC} for normal operation.

APPLICATION OVERVIEW

ADDRESSING SCHEME - The SCANSTA111 architecture extends the functionality of the IEEE 1149.1 Standard by supplementing that protocol with an addressing scheme which allows a test controller to communicate with specific 'STA111s within a network of 'STA111s. That network can include both multi-drop and hierarchical connectivity. In effect, the 'STA111 architecture allows a test controller to dynamically select specific portions of such a network for participation in scan operations. This allows a complex system to be partitioned into smaller blocks for testing purposes. The 'STA111 provides two levels of test-network partitioning capability. First, a test controller can select individual 'STA111s, specific sets of 'STA111s (multi-cast groups), or all 'STA111s (broadcast). This 'STA111-selection process is supported by a Level-1 communication protocol. Second, within each selected 'STA111, a test controller can select one or more of the chip's three local scan-ports. That is, individual local ports can be selected for inclusion in the (single) scan-chain which a 'STA111 presents to the test controller. This mechanism allows a controller to select specific terminal scan-chains within the overall scan network. The port-selection process is supported by a Level-2 protocol.

HIERARCHICAL SUPPORT - Multiple SCANSTA111's can be used to assemble a hierarchical boundary-scan tree. In such a configuration, the system tester can configure the local ports of a set of 'STA111s so as to connect a specific set of local scan-chains to the active scan chain. Using this capability, the tester can selectively communicate with specific portions of a target system. The tester's scan port is connected to the backplane scan port of a root layer of 'STA111s, each of which can be selected using multi-drop addressing. A second tier of 'STA111s can be connected to this root layer, by connecting a local port (LSP) of a root-layer 'STA111 to the backplane port of a second-tier 'STA111. This process can be continued to construct a multi-level scan hierarchy. 'STA111 local ports which are not cascaded into higher-level 'STA111s can be thought of as the terminal leaves of a scan tree. The test master can select one or more target leaves by selecting and configuring the local ports of an appropriate set of 'STA111s in the test tree.

Check with your ATPG tool vendor to ensure support of this feature.

STATE MACHINES

The 'STA111 is IEEE 1149.1-compatible, in that it supports all required 1149.1 operations. In addition, it supports a higher level of protocol, (Level 1), that extends the IEEE 1149.1 Std. to a multi-drop environment.

In multi-drop scan systems, a scan tester can select individual 'STA111s for participation in upcoming scan operations. STA111 selection is accomplished by simultaneously scanning a device address out to multiple 'STA111s. Through an on-chip address matching process, only those 'STA111s whose statically-assigned address matches the scanned-out address become selected to receive further instructions from the scan tester. SCANSTA111 selection is done using a Level-1 protocol, while follow-on instructions are sent to selected 'STA111s by using a Level-2 protocol.

Copyright © 2001–2013, Texas Instruments Incorporated

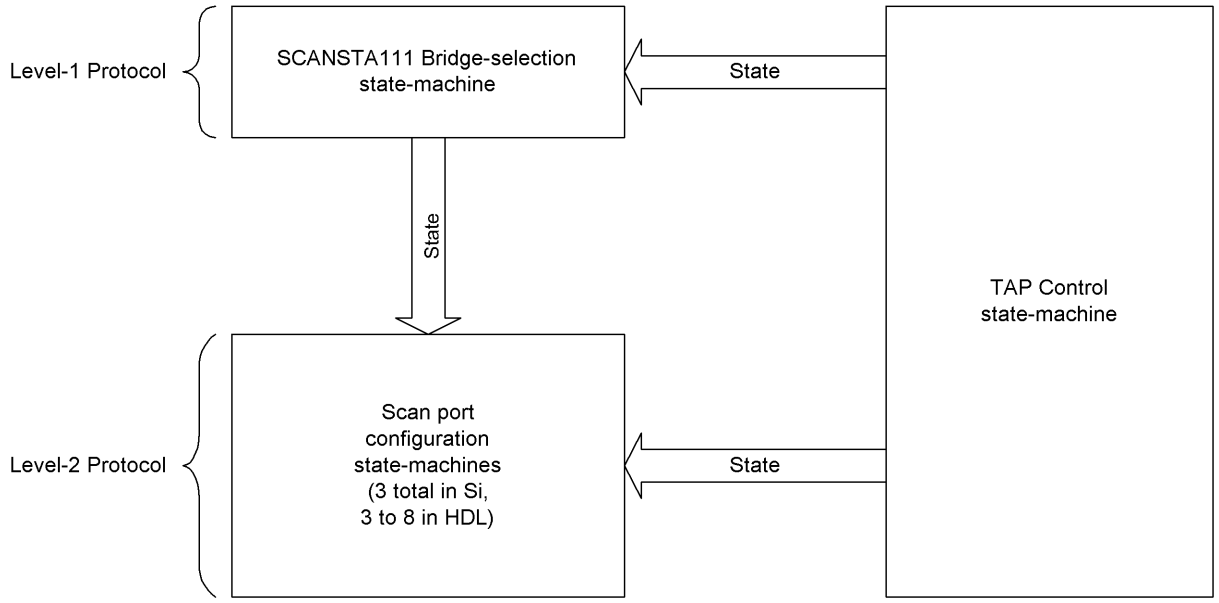

Figure 2. SCANSTA111 State Machines

The 'STA111 contains three distinct but coupled state-machines (see Figure 2). The first of these is the TAP-control state-machine, which is used to drive the 'STA111's scan ports in conformance with the 1149.1 Standard. The second is the 'STA111-selection state-machine (Figure 3). The third state-machine actually consists of three identical but independent state-machines (see Figure 4), one per 'STA111 local scan port. Each of these scan port selection state-machines allows individual local ports to be inserted into and removed from the 'STA111s overall scan chain.

The 'STA111 selection state-machine performs the address matching which gives the 'STA111 its multi-drop capability. That logic supports single-'STA111 access, multi-cast, and broadcast. The 'STA111-selection state-machine implements the chip's Level-1 protocol.

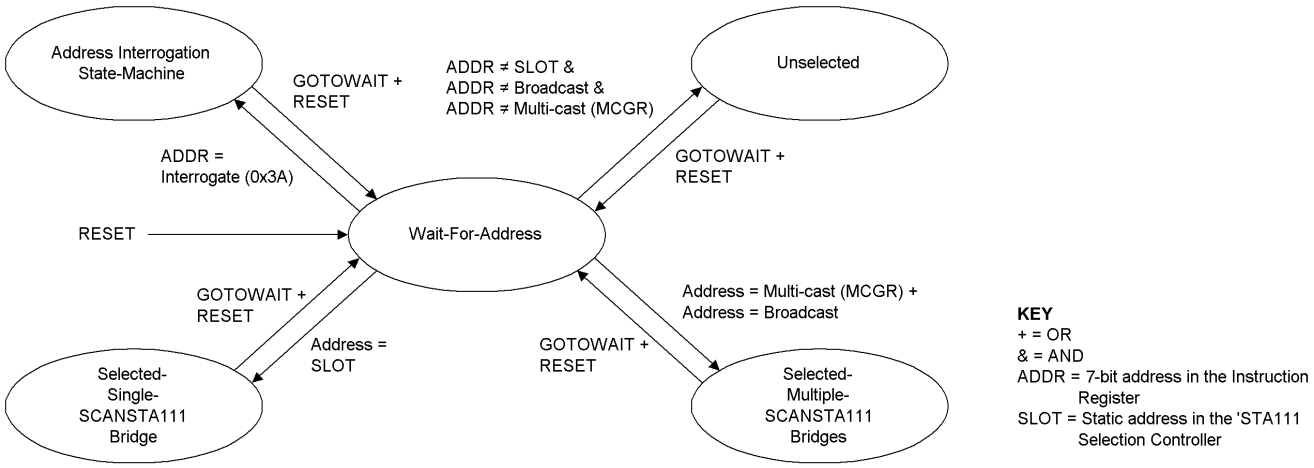

Figure 3. State Machine for SCANSTA111 Selection Controller

Copyright © 2001–2013, Texas Instruments Incorporated

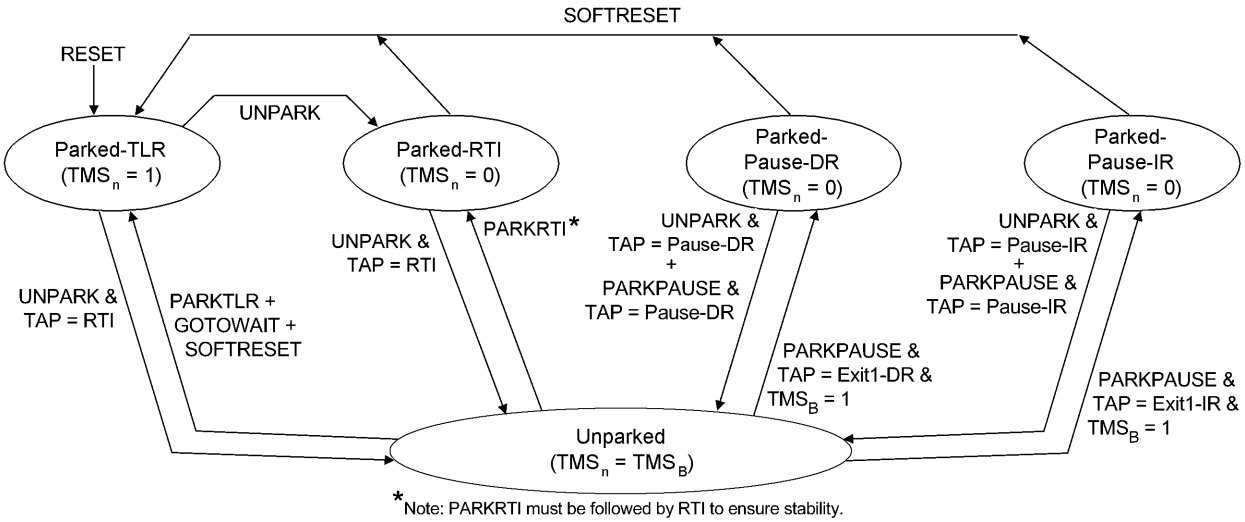

Figure 4. Local SCANSTA111 Port Configuration State Machine

The 'STA111's scan port-configuration state-machine is used to control the insertion of local scan ports into the overall scan chain, or the isolation of local ports from the chain. From the perspective of a system's (single) scan controller, each 'STA111 presents only one scan chain to the master. The 'STA111 architecture allows one or more of the 'STA111's local ports to be included in the active scan chain.

Each local port can be parked in one of four stable states (*Parked-TLR*, *Parked-RTI*, *Parked-Pause-DR* or *Parked-Pause-IR*), either individually or simultaneously with other local ports. Parking a chain removes that local chain from the active scan chain. Conversely, a parked chain can be unparked, causing the corresponding local port to be inserted into the active scan chain.

As shown in Figure 4, the 'STA111's three scan port-configuration state-machines allow each of the part's local ports to occupy a different state at any given time. For example, some ports may be parked, perhaps in different states, while other ports participate in scan operations. The state-diagram shows that some state transitions depend on the current state of the TAP-control state-machine. As an example, a local port which is presently in the *Parked-RTI* state does not become unparked (i.e., enter the *Unparked* state) until the 'STA111 receives an *UNPARK* instruction and the 'STA111's TAP state-machine enters the *Run-Test/Idle* state.

Similarly, certain transitions of the scan port-configuration state-machine can force the 'STA111's LSP-control state-machine into specific states. For example, when a local port is in the *Unparked* state, the 'STA111 receives the *PARKRTI* instruction and the TAP is transitioned through *Run-Test/Idle* state, the Local Port controller enters the *Parked-RTI* state in which TMS_n will be held low until the port is later unparked. Once the *Park-RTI* instruction has been updated into the instruction register the TAP MUST be transitioned through the *Run-Test/Idle* state. While TMS_n is held low, all devices on that local scan chain remain in their current TAP State (the *RTI* TAP controller state in this example).

The 'STA111's scan port-configuration state-machine implements part of the 'STA111's Level-2 protocol. In addition, the 'STA111 provides a number of Level-2 instructions for functions other than local scan port configuration. These instructions provide access to and control of various registers within the 'STA111. This set of instructions includes:

BYPASS	*CNTRSEL*
EXTEST	*LFSRON*
SAMPLE/PRELOAD	*LFSROFF*
IDCODE	*CNTRON*
MODESEL	*CNTROFF*
MCGRSEL	*GOTOWAIT*
LFSRSEL	

Copyright © 2001–2013, Texas Instruments Incorporated

Figure 5 illustrates how the 'STA111's state-machines interact. The 'STA111-selection state-machine enables or disables operation of the chip's three port-selection state-machines. In 'STA111s which are selected via Level-1 protocol (either as individual 'STA111s or as members of broadcast or multi-cast groups), Level-2 protocol commands can be used to park or unpark local scan ports. Note that most transitions of the port-configuration state-machines are gated by particular states of the 'STA111's TAP-control state-machine, as shown in Figure 4 or Figure 5.

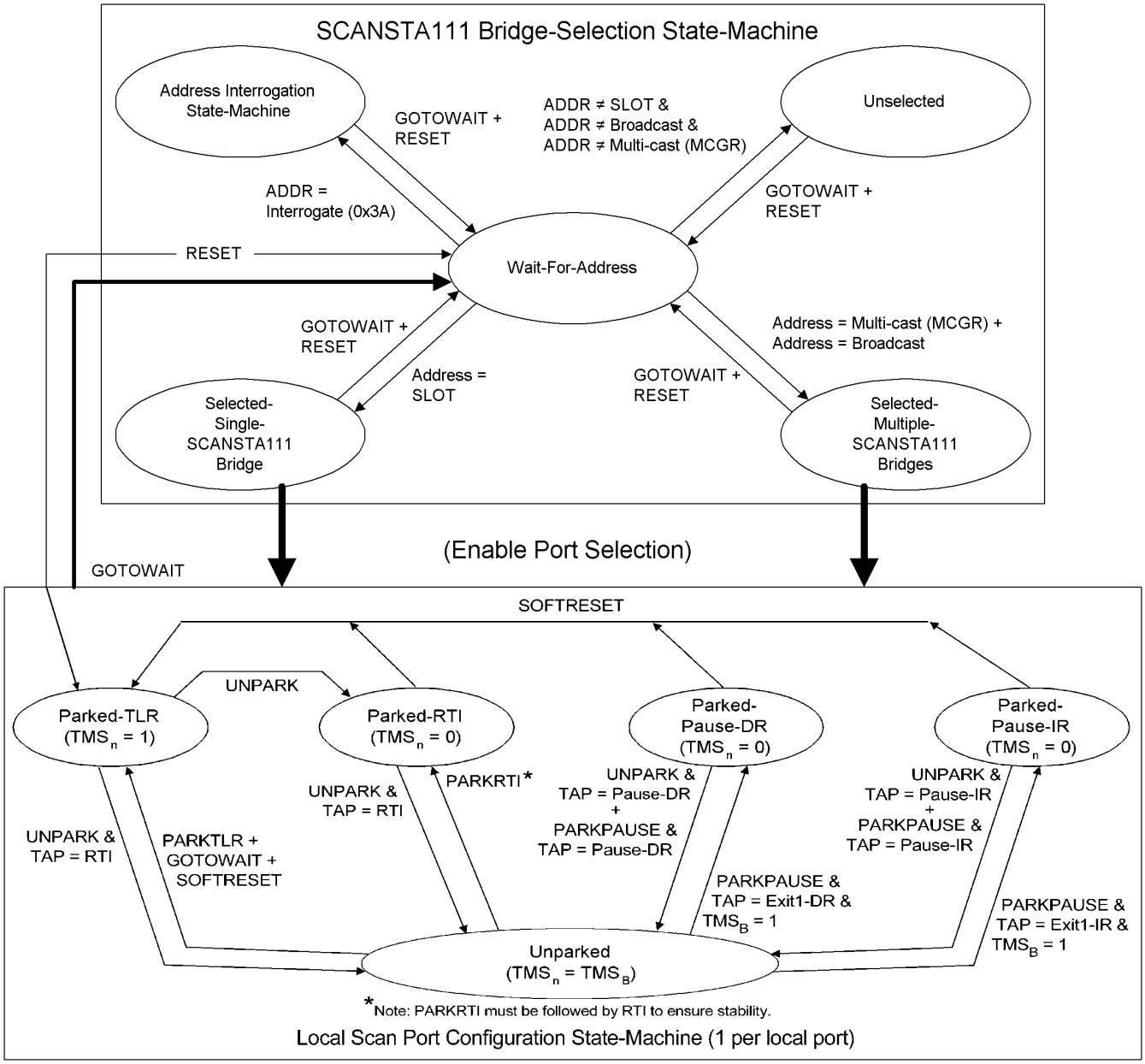

Figure 5. Relationship Between SCANSTA111 State Machines

Following a hardware reset, the TAP controller state-machine is in the *Test-Logic-Reset* (TLR) state; the 'STA111-selection state-machine is in the *Wait-For-Address* state; and each of the three port-selection state-machines is in the *Parked-TLR* state. The 'STA111 is then ready to receive Level-1 protocol, followed by Level-2 protocol.

Copyright © 2001–2013, Texas Instruments Incorporated

TESTER/SCANSTA111 INTERFACE

An IEEE 1149.1 system tester sends instructions to a 'STA111 via that 'STA111's backplane scan-port. Following test logic reset, the 'STA111's selection state-machine is in the *Wait-For-Address* state. When the 'STA111's TAP controller is sequenced to the *Shift-IR* state, data shifted in through the TDI_B input is shifted into the 'STA111's instruction register. Note that prior to successful selection of a 'STA111, data is not shifted out of the instruction register and out through the 'STA111's TDO_B output, as it is during normal scan operations. Instead, as each new bit enters the instruction register's most-significant bit, data shifted out from the least-significant bit is discarded.

When the instruction register is updated with the address data, the 'STA111's address-recognition logic compares the seven least-significant bits of the instruction register with the 7-bit assigned address which is statically present on the $S_{(0-6)}$ inputs. Simultaneously, the scanned-in address is compared with the reserved Broadcast and Multi-cast addresses. If an address match is detected, the 'STA111-selection state-machine enters one of the two selected states. If the scanned address does not match a valid single-slot address or one of the reserved broadcast/multi-cast addresses, the 'STA111-selection state-machine enters the *Unselected* state.

Note that the SLOT inputs should not be set to a value corresponding to a multi-cast group, or to the broadcast address. Also note that the single 'STA111 selection process must be performed for all 'STA111s which are subsequently to be addressed in multi-cast mode. This is required because each such device's Multicast Group Register (MCGR) must be programmed with a multi-cast group number, and the MCGR is not accessible to the test controller until that 'STA111 has first entered the *Selected-Single-'STA111* state.

Once a 'STA111 has been selected, Level-2 protocol is used to issue commands and to access the chip's various registers.

REGISTER SET

The SCANSTA111 includes a number of registers which are used for 'STA111 selection and configuration, scan data manipulation, and scan-support operations. These registers can be grouped as shown in Table 2.

The specific fields and functions of each of these registers are detailed in the section of this document titled Data Register Descriptions.

Note that when any of these registers is selected for insertion into the 'STA111's scan-chain, scan data enters through that register's most-significant bit. Similarly, data that is shifted out of the register is fed to the scan input of the next-downstream device in the scan-chain.

Table 2. REGISTER DESCRIPTIONS

Register Name	BSDL Name	Description
Instruction Register	INSTRUCTION	'STA111 addressing and instruction-decode IEEE Std. 1149.1 required register
Boundary-Scan Register	BOUNDARY	IEEE Std. 1149.1 required register
Bypass Register	BYPASS	IEEE Std. 1149.1 required register
Device Identification Register	IDCODE	IEEE Std. 1149.1 optional register
Multi-Cast Group Register	MCGR	'STA111-group address assignment
Mode $Register_0$	MODE	'STA111 local-port configuration and control bits
Mode $Register_1$	N/A	'STA111 local-port configuration and control bits (1)(2)
Mode $Register_2$	MODE2	'STA111 Shared GPIO configuration bits
Linear-Feedback Shift Register	LFSR	'STA111 scan-data compaction (signature generation)
TCK Counter Register	CNTR	Local-port TCK clock-gating (for BIST)
Dedicated GPIO $Register_{(0-n)}$	N/A	'STA111 Dedicated GPIO control bits (2)
Shared GPIO $Register_{(0-n)}$	SGPIOn	'STA111 Shared GPIO control bits

(1) One dedicated and one shared GPIO register exists for each LSP that supports dedicated and/or shared GPIO (maximum of eight shared and eight dedicated GPIO registers).
(2) HDL version only

Copyright © 2001–2013, Texas Instruments Incorporated

LEVEL 1 PROTOCOL (ADDRESSING MODES)

Table 3. SCANSTA111 Address Modes

Address Type	Hex Address	Binary Address	TDO_B State
Direct Address	00 to 39, 40 to 7F. (80 to FF[(1)])	00000000 to 00111010 01000000 to 01111111 (10000000 to 11111111[(1)])	Normal IEEE Std. 1149.1
Interrogation Address	3A	00111010	Force strong 0' or weak 1' as ones-complement address is shifted out.
Broadcast Address	3B	00111011	Always TRI-STATED
Multi-Cast Group 0	3C	00111100	Always TRI-STATED
Multi-Cast Group 1	3D	00111101	Always TRI-STATED
Multi-Cast Group 2	3E	00111110	Always TRI-STATED
Multi-Cast Group 3	3F	00111111	Always TRI-STATED

(1) Hex addresses 80' to FF' are only available when using the eighth address bit in the HDL version of the SCANSTA111. The Silicon part has seven address lines and will treat the most-significant address bit as a don't care.

The SCANSTA111 supports single and multiple modes of addressing a 'STA111. The single mode selects one 'STA111 and is called Direct Addressing. More than one 'STA111 device can be selected via the Broadcast and Multi-Cast Addressing modes.

DIRECT ADDRESSING: The 'STA111 enters the *Wait-For-Address* state when:

1. its TAP Controller enters the *Test-Logic-Reset* state, or
2. its instruction register is updated with the *GOTOWAIT* instruction (while either selected or unselected).

Each 'STA111 within a scan network must be statically configured with a unique address via its $S_{(0-6)}$ inputs. While the 'STA111 controller is in the *Wait-For-Address* state, data shifted into bits 6 through 0 of the instruction register is compared with the address present on the $S_{(0-6)}$ inputs in the *Update-IR* state. If the seven (7) LSBs of the instruction register match the address on the $S_{(0-6)}$ inputs, (see Figure 6) the 'STA111 becomes selected, and is ready to receive Level 2 Protocol (i.e., further instructions). When the 'STA111 is selected, its device identification register is inserted into the active scan chain.

All 'STA111s whose $S_{(0-6)}$ address does not match the instruction register address become unselected. An unselected 'STA111 will remain unselected until either its TAP Controller enters the *Test-Logic-Reset* state, or its instruction register is updated with the *GOTOWAIT* instruction.

BROADCAST ADDRESSING:

The Broadcast Address allows a tester to simultaneously select all 'STA111s in a test network. This mode is useful in testing systems which contain multiple identical boards. To avoid bus contention between scan-path output drivers on different boards, each 'STA111's TDO_B buffer is always TRI-STATEd while in Broadcast mode. In this configuration, the on-chip Linear Feedback Shift Register (LFSR) can be used to accumulate a test result signature for each board that can be read back later by direct-addressing each board's 'STA111.

MULTICAST ADDRESSING:

As a way to make the broadcast mechanism more selective, the 'STA111 provides a Multi-cast addressing mode. A 'STA111's multi-cast group register (MCGR) can be programmed to assign that 'STA111 to one of four (4) Multi-Cast groups. When 'STA111s in the *Wait-For-Address* state are updated with a Multi-Cast address, all 'STA111s whose MCGR matches the Multi-Cast group will become selected. As in Broadcast mode, TDO_B is always TRI-STATEd while in Multi-cast mode.

Copyright © 2001–2013, Texas Instruments Incorporated

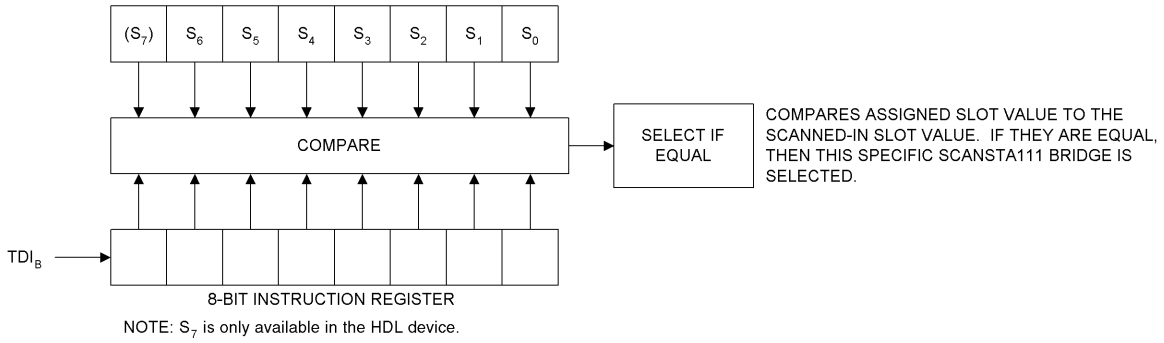

Figure 6. Direct Addressing: Device Address Loaded into Instruction Register

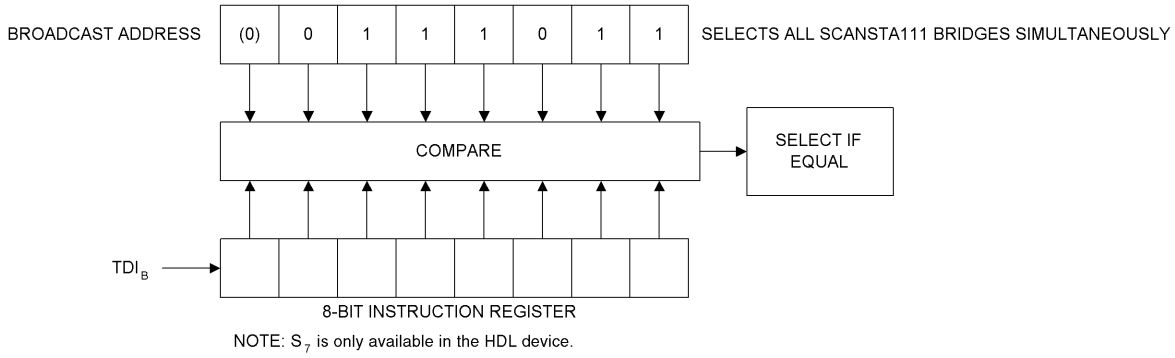

Figure 7. Broadcast Addressing: Address Loaded into Instruction Register

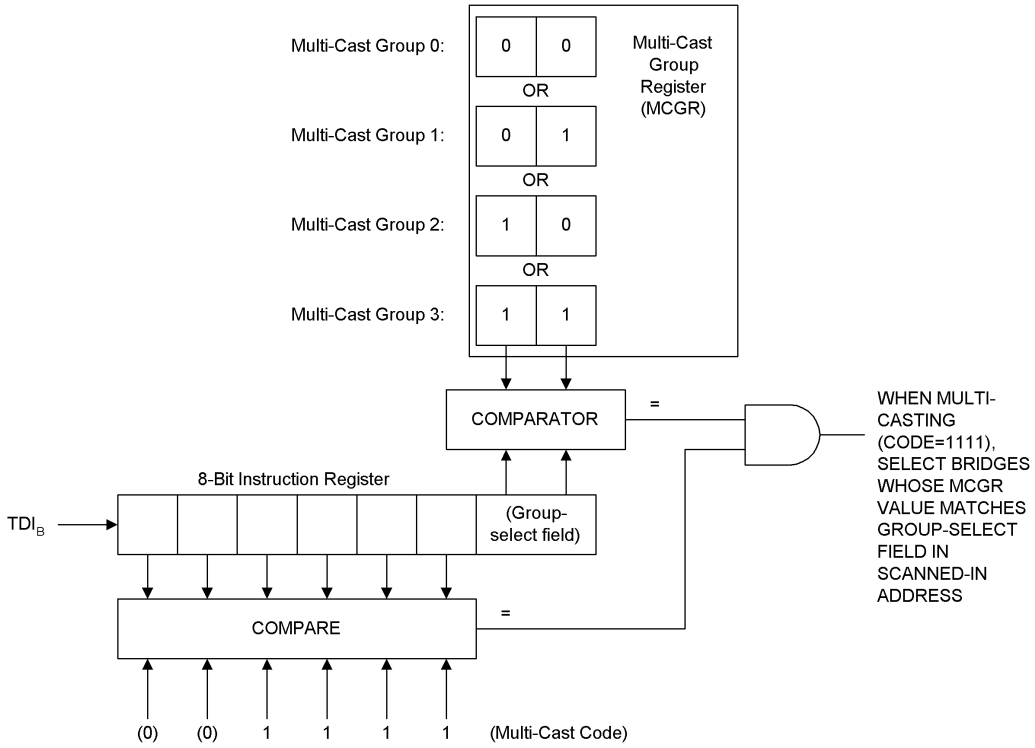

Figure 8. Multi-Cast Addressing: Address Loaded into Instruction Register

LEVEL 2 PROTOCOL

Once the SCANSTA111 has been successfully addressed and selected, its internal registers may be accessed via Level-2 Protocol. Level-2 Protocol is compliant to IEEE Std. 1149.1 TAP protocol with one exception: if the 'STA111 is selected via the Broadcast or Multi-Cast address, TDO_B is always TRI-STATED. (The TDO_B buffer must be implemented this way to prevent bus contention.) Upon being selected, (i.e., the 'STA111 Selection controller transitions from the *Wait-For-Address* state to one of the Selected states), each of the local scan ports (LSP_0 , LSP_1 , LSP_2) remains parked in one of the following four TAP Controller states: *Test-Logic-Reset*, *Run-Test/Idle*, *Pause-DR*, or *Pause-IR* and the active scan chain consists of: TDI_B through the instruction register (or the IDCODE register) and out through TDO_B.

TDI_B → Instruction Register → TDO_B

The *UNPARK* instruction (described later) is used to insert one or more local scan ports into the active scan chain. Table 6 describes which local ports are inserted into the chain, and in what order.

LEVEL 2 INSTRUCTION TYPES There are two types of instructions (reference Table 4):

1. Instructions that insert a 'STA111 register into the active scan chain so that the register can be captured or updated (*BYPASS*, *SAMPLE/PRELOAD*, *EXTEST*, *ID-CODE*, *MODESEL*, *MCGRSEL*, *LFSR-SEL*, *CNTRSEL*).
2. Instructions that configure local ports or control the operation of the linear feedback shift register and counter registers (*UNPARK*, *PARKTRL*, *PARKRTI*, *PARK-PAUSE*, *GOTOWAIT*, *SOFTRESET*, *LFSRON*, *LFSROFF*, *CNTRON*, *CNTROFF*). These instructions, along with any other yet undefined Op-Codes, will cause the device identification register to be inserted into the active scan chain.

Table 4. Level 2 Protocol and Op-Codes

Instructions	Hex Op-Code	Binary Op-Code	Data Register
BYPASS	FF	1111 1111	Bypass Register
EXTEST	00	0000 0000	Boundary-Scan Register
SAMPLE/PRELOAD	81	1000 0001	Boundary-Scan Register
IDCODE	AA	1010 1010	Device Identification Register
UNPARK	E7	1110 0111	Device Identification Register
PARKTLR	C5	1100 0101	Device Identification Register
PARKRTI	84	1000 0100	Device Identification Register
PARKPAUSE	C6	1100 0110	Device Identification Register
GOTOWAIT (1)	C3	1100 0011	Device Identification Register
MODESEL	8E	1000 1110	Mode $Register_0$
$MODESEL_1$	82	1000 0010	Mode $Register_1$
$MODESEL_2$	83	1000 0011	Mode $Register_2$
$MODESEL_3$	85	1000 0101	Mode $Register_3$
MCGRSEL	03	0000 0011	Multi-Cast Group Register
SOFTRESET	88	1000 1000	Device Identification Register
LFSRSEL	C9	1100 1001	Linear Feedback Shift Register
LFSRON	0C	0000 1100	Device Identification Register
LFSROFF	8D	1000 1101	Device Identification Register
CNTRSEL	CE	1100 1110	32-Bit TCK Counter Register
CNTRON	0F	0000 1111	Device Identification Register
CNTROFF	90	1001 0000	Device Identification Register
DEFAULT_BYPASS (2)	07	0000 0111	Set Bypass_reg as default data register
TRANSPARENT0	A0	1010 0000	Transparent Enable $Register_0$
TRANSPARENT1	A1	1010 0001	Transparent Enable $Register_1$
TRANSPARENT2	A2	1010 0010	Transparent Enable $Register_2$
TRANSPARENT3	A3	1010 0011	Transparent Enable $Register_3$

(1) All other instructions act on selected 'STA111s only.
(2) Commands added to HDL version of 'STA111.

Copyright © 2001–2013, Texas Instruments Incorporated

Table 4. Level 2 Protocol and Op-Codes (continued)

Instructions	Hex Op-Code	Binary Op-Code	Data Register
TRANSPARENT4	A4	1010 0100	Transparent Enable $Register_4$
TRANSPARENT5	A5	1010 0101	Transparent Enable $Register_5$
TRANSPARENT6	A6	1010 0110	Transparent Enable $Register_6$
TRANSPARENT7	A7	1010 0111	Transparent Enable $Register_7$
$DGPIO_0$	B0	1011 0000	Dedicated GPIO $Register_0$
$DGPIO_1$	B1	1011 0001	Dedicated GPIO $Register_1$
$DGPIO_2$	B2	1011 0010	Dedicated GPIO $Register_2$
$DGPIO_3$	B3	1011 0011	Dedicated GPIO $Register_3$
$DGPIO_4$	B4	1011 0100	Dedicated GPIO $Register_4$
$DGPIO_5$	B5	1011 0101	Dedicated GPIO $Register_5$
$DGPIO_6$	B6	1011 0110	Dedicated GPIO $Register_6$
$DGPIO_7$	B7	1011 0111	Dedicated GPIO $Register_7$
$SGPIO_0$	B8	1011 1000	Shared GPIO $Register_0$
$SGPIO_1$	B9	1011 1001	Shared GPIO $Register_1$
$SGPIO_2$	BA	1011 1010	Shared GPIO $Register_2$
$SGPIO_3$	BB	1011 1011	Shared GPIO $Register_3$
$SGPIO_4$	BC	1011 1100	Shared GPIO $Register_4$
$SGPIO_5$	BD	1011 1101	Shared GPIO $Register_5$
$SGPIO_6$	BE	1011 1110	Shared GPIO $Register_6$
$SGPIO_7$	BF	1011 1111	Shared GPIO $Register_7$
Other Undefined	TBD	TBD	Device Identification Register

LEVEL 2 INSTRUCTION DESCRIPTIONS:

BYPASS: The *BYPASS* instruction selects the bypass register for insertion into the active scan chain when the 'STA111 is selected.

EXTEST: The *EXTEST* instruction selects the boundary-scan register for insertion into the active scan chain. The boundary-scan register consists of seven sample only shift cells connected to the $S_{(0-6)}$ and $\overline{OE}$ inputs. On the 'STA111, the *EXTEST* instruction performs the same function as the *SAMPLE/PRELOAD* instruction, since there aren't any scannable outputs on the device.

SAMPLE/PRELOAD: The *SAMPLE/PRELOAD* instruction selects the boundary-scan register for insertion into the active scan chain. The boundary-scan register consists of seven sample only shift cells connected to the $S_{(0-6)}$ and $\overline{OE}$ inputs.

IDCODE: The *IDCODE* instruction selects the device identification register for insertion into the active scan chain. When *IDCODE* is the current active instruction the device identification 0FC0F01F Hex is captured upon exiting the *Capture-DR* state.

UNPARK: This instruction unparks the Local Scan Port Network and inserts it into the active scan chain as configured by Mode $Register_0$ (and Mode $Register_1$ in the HDL) (see Table 6). Unparked LSPs are sequenced synchronously with the 'STA111's TAP controller. When a LSP has been parked in the *Test-Logic-Reset* or *Run-Test/Idle* state, it will not become unparked until the 'STA111's TAP Controller enters the *Run-Test/Idle* state following the *UNPARK* instruction. An LSP which has been parked in *Test-Logic-Reset* will be parked in *Run-Test/Idle* upon update of an *UNPARK* instruction. If an LSP has been parked in one of the stable pause states (*Pause-DR* or *Pause-IR*), it will not become unparked until the 'STA111's TAP Controller enters the respective pause state. (See Figure 9 through Figure 12).

PARKTLR: This instruction causes all unparked LSPs to be parked in the *Test-Logic-Reset* TAP controller state and removes the LSP network from the active scan chain. The LSP controllers keep the LSPs parked in the *Test-Logic-Reset* state by forcing their respective TMS_n output with a constant logic 1 while the LSP controller is in the *Parked-TLR* state (see Figure 4).

Copyright © 2001–2013, Texas Instruments Incorporated

PARKRTI: This instruction causes all unparked LSPs to be parked in the *Run-Test/Idle* state. The update of the *PARKRTI* instruction MUST immediately be followed by a TMS_B=0 (to enter the *RTI* state) in order to assure stability. When a LSP_n is active (unparked), its TMS_n signals follow TMS_B and the LSP_n controller state transitions are synchronized with the TAP Controller state transitions of the 'STA111. When the instruction register is updated with the *PARKRTI* instruction, TMS_n will be forced to a constant logic 0, causing the unparked local TAP Controllers to be parked in the *Run-Test/Idle* state. When an LSP_n is parked, it is removed from the active scan chain.

PARKPAUSE: The *PARKPAUSE* instruction has dual functionality. It can be used to park unparked LSPs or to unpark parked LSPs. The instruction places all unparked LSPs in one of the TAP Controller pause states. A local port does not become parked until the 'STA111's TAP Controller is sequenced through *Exit1-DR/IR* into the *Update-DR/IR* state. When the 'STA111 TAP Controller is in the *Exit1-DR* or *Exit1-IR* state and TMSB is high, the LSP controller forces a constant logic 0 onto TMSL thereby parking the port in the *Pause-DR* or *Pause-IR* state respectively (see Figure 4). Another instruction can then be loaded to reconfigure the local ports or to deselect the 'STA111 (therefore, *MODESEL*, *GOTOWAIT*, and so on).

If the *PARKPAUSE* instruction is given to a whose LSPs are parked in *Pause-IR* or *Pause-DR*, the parked LSPs will become unparked when the 'STA111's TAP controller is sequenced into the respective Pause state.

The *PARKPAUSE* instruction was implemented with this dual functionality to enable backplane testing (interconnect testing between boards) with simultaneous Updates and Captures.

Simultaneous Update and Capture of several boards can be performed by parking LSPs of the different boards in the *Pause-DR* TAP controller state, after shifting the data to be updated into the boundary registers of the components on each board. The broadcast address is used to select all 'STA111s connected to the backplane. The *PARKPAUSE* instruction is scanned into the selected 'STA111s and the 'STA111 TAP controllers are sequenced to the *Pause-DR* state where the LSPs of all 'STA111s become unparked. The local TAP controllers are then sequenced through the *Update-DR*, *Select-DR*, *Capture-DR*, *Exit1-DR*, and parked in the *Pause-DR* state, as the 'STA111 TAP controller is sequenced into the *Update-DR* state. When a LSP is parked, it is removed from the active scan chain.

GOTOWAIT: This instruction is used to return all 'STA111s to the *Wait-For-Address* state. All unparked LSPs will be parked in the *Test-Logic-Reset* TAP controller state (see Figure 5).

MODESEL: The *MODESEL* instruction inserts Mode $Register_0$ into the active scan chain. Mode $Register_0$ determines the LSPN configuration for a device with up to five (5) LSPs (only three in Silicon). Bit 7 of Mode $Register_0$ is a read-only counter status flag.

$MODESEL_n$: The *$MODESEL_n$* instruction inserts Mode $Register_n$ (n = 1 to 3) into the active scan chain. Mode $Register_1$ determines the LSPN configuration for LSP 5, 6 and 7 (if they exist), and Mode $Register_2$ determines the Shared GPIO configuration.

MCGRSEL: This instruction inserts the multi-cast group register (MCGR) into the active scan chain. The MCGR is used to group 'STA111s into multi-cast groups for parallel TAP sequencing (therefore, to simultaneously perform identical scan operations).

SOFTRESET: This instruction causes all 3 Port configuration controllers (see Figure 4) to enter the *Parked-TLR* state, which forces TMS_n high; this parks each local port in the *Test-Logic-Reset* state within 5 TCK_B cycles.

LFSRSEL: This instruction inserts the linear feedback shift register (LFSR) into the active scan chain, allowing a compacted signature to be shifted out of the LFSR during the *Shift-DR* state. (The signature is assumed to have been computed during earlier *LFSRON* shift operations.) This instruction disables the LFSR register's feedback circuitry, turning the LFSR into a standard 16-bit shift register. This allows a signature to be shifted out of the register, or a seed value to be shifted into it.

LFSRON: Once this instruction is executed, the linear feedback shift register samples data from the active scan path (including all unparked TDI_n) during the *Shift-DR* state. Data from the scan path is shifted into the linear feedback shift register and compacted. This allows a serial stream of data to be compressed into a 16-bit signature that can subsequently be shifted out using the *LFSRSEL* instruction. The linear feedback shift register is not placed in the scan chain during this mode. Instead, the register samples the active scan-chain data as it flows from the LSPN to TDO_B.

LFSROFF: This instruction terminates linear feedback shift register sampling. The LFSR retains its current state after receiving this instruction.

 Copyright © 2001–2013, Texas Instruments Incorporated

CNTRSEL: This instruction inserts the 32-bit TCK counter shift register into the active scan chain. This allows the user to program the number of n TCK cycles to send to the parked local ports once the *CNTRON* instruction is issued (e.g., for BIST operations). Note that to ensure completion of countdown, the 'STA111 should receive at least n TCK_B pulses.

CNTRON: This instruction enables the TCK counter. The counter begins counting down on the first rising edge of TCK_B following the *Update-IR* TAP controller state and is decremented on each rising edge of TCK_B thereafter. When the TCK counter reaches terminal count, 00000000 Hex, TCK_n of all parked LSP's is held low. This function overrides Mode $Register_0$ TCK control bit (bit-3).

If the *CNTRON* instruction is issued when the TCK counter is 00000000 (terminal count) the local TCKs of parked LSPs will be gated. The counter will begin counting on the rising edge of TCK_B when the TCK counter is loaded with a non-zero value following a *CNTRSEL* instruction (see BIST Support in Special Features section for an example).

CNTROFF: This instruction disables the TCK counter, and TCK_n control is returned to Mode $Register_0$ (bit 3).

DEFAULT_BYPASS: This instruction selects the Bypass register to be the default for SCANSTA111 commands that do not explicitly require a data register. The default after RESET is the Device ID register.

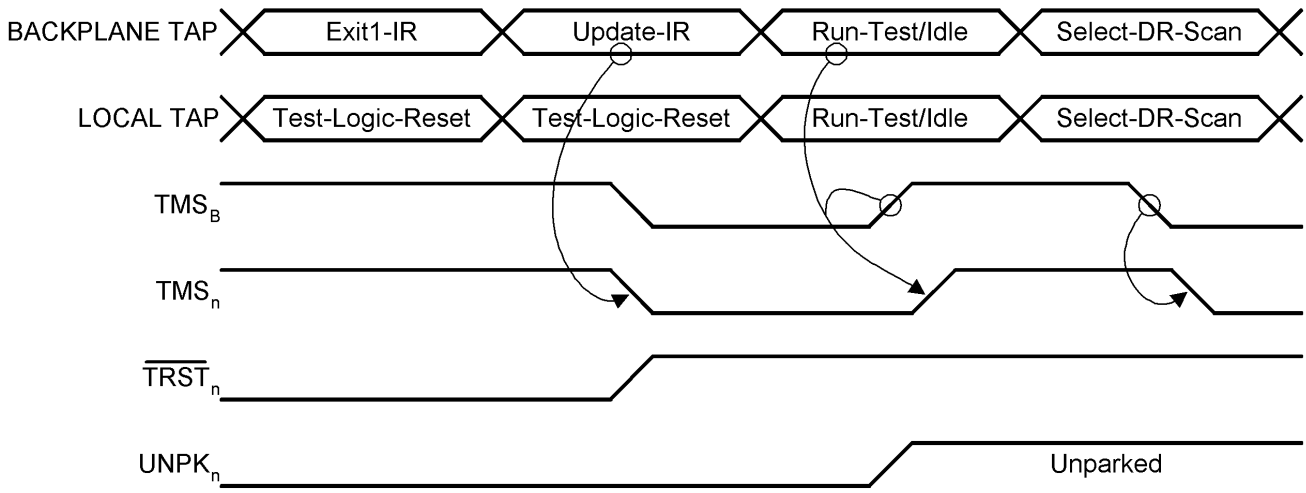

Figure 9. Local Scan Port Synchronization from Parked-TLR State

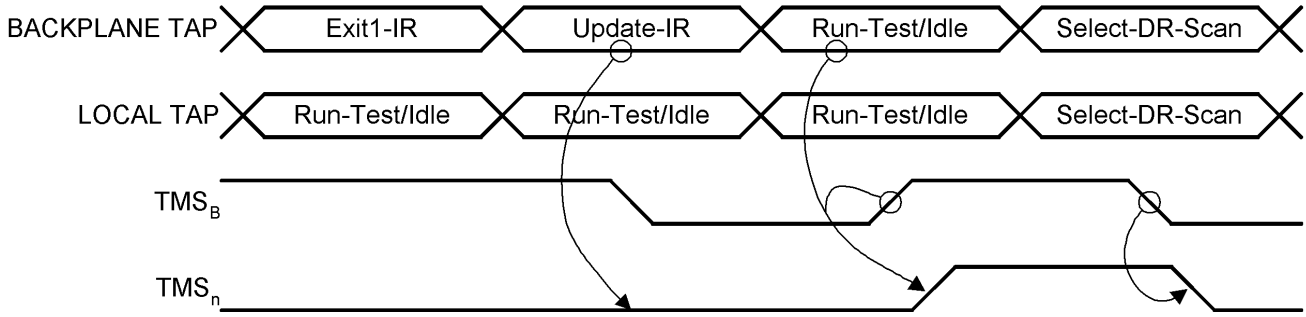

Figure 10. Local Scan Port Synchronization from Parked-RTI State

REGISTER DESCRIPTIONS

INSTRUCTION REGISTER

The instruction shift register is an 8-bit register that is in series with the scan chain whenever the TAP Controller of the SCANSTA111 is in the *Shift-IR* state. Upon exiting the *Capture-IR* state, the value XXXXXX01 is captured into the instruction register, where XXXXXX represents the value on the $S_{(0-6)}$ inputs. When the 'STA111 controller is in the *Wait-For-Address* state, the instruction register is used for 'STA111 selection via address matching. In addressing individual 'STA111s, the chip's addressing logic performs a comparison between a statically-configured (hard-wired) value on that 'STA111's slot inputs, and an address which is scanned into the chip's instruction register. Binary address codes 000000 through 111010 (00 through 3A Hex) are reserved for addressing individual 'STA111s. Address 3B Hex is for Broadcast mode.

During multi-cast (group) addressing, a scanned-in address is compared against the (previously scanned-in) contents of a 'STA111's Multi-Cast Group register. Binary address codes 111110 through 111111 (3A through 3F Hex) are reserved for multi-cast addressing, and should not be assigned as 'STA111 slot-input values.

BOUNDARY-SCAN REGISTER

The boundary-scan register is a sample only shift register containing cells from the $S_{(0-6)}$ and $\overline{OE}$ inputs. The register allows testing of circuitry external to the 'STA111. It permits the signals flowing between the system pins to be sampled and examined without interfering with the operation of the on-chip system logic.

The scan chain is arranged as follows:

$TDI_B \rightarrow \overline{OE} \rightarrow S_6 \rightarrow S_5 \rightarrow S_4 \rightarrow S_3 \rightarrow S_2 \rightarrow S_1 \rightarrow S_0 \rightarrow TDO_B$

BYPASS REGISTER

The bypass register is a 1-bit register that operates as specified in IEEE Std. 1149.1 once the 'STA111 has been selected. The register provides a minimum length serial path for the movement of test data between TDI_B and the LSPN. This path can be selected when no other test data register needs to be accessed during a board-level test operation. Use of the bypass register shortens the serial access-path to test data registers located in other components on a board-level test data path.

MULTI-CAST GROUP REGISTER

Multi-cast is a method of simultaneously communicating with more than one selected 'STA111. The multi-cast group register (MCGR) is a 2-bit register used to determine which multi-cast group a particular 'STA111 is assigned to. Four addresses are reserved for multi-cast addressing. When a 'STA111 is in the *Wait-For-Address* state and receives a multi-cast address, and if that 'STA111's MCGR contains a matching value for that multi-cast address, the 'STA111 becomes selected and is ready to receive Level 2 Protocol (i.e., further instructions).

The MCGR is initialized to 00 upon entering the *Test-Logic-Reset* state.

Table 5. Multi-Cast Group Register Addressing

MCGR Bits 1,0	Hex Address	Binary Address
00	3C	00111100
01	3D	00111101
10	3E	00111110
11	3F	00111111

The following actions are used to perform multi-cast addressing:

1. Assign all target 'STA111s to a multi-cast group by writing each individual target 'STA111's MCGR with the same multi-cast group code (see Table 5). This configuration step must be done by individually addressing each target 'STA111, using that chip's assigned slot value.
2. Scan out the multi-cast group address through the TDI_B input of all 'STA111s. Note that this occurs in parallel, resulting in the selection of only those 'STA111s whose MCGR was previously programmed with the matching multi-cast group code.

Copyright © 2001–2013, Texas Instruments Incorporated

MODE REGISTER$_0$

Mode Register$_0$ is an 8-bit data register used primarily to configure the Local Scan Port Network. Mode Register$_0$ is initialized to 00000001 binary upon entering the *Test-Logic-Reset* state. Bits 0, 1, 2, and 4 are used for scan chain configuration as described in Table 6. When the *UNPARK* instruction is executed, the scan chain configuration is as shown in Table 6 below. When all LSPs are parked, the scan chain configuration is TDI_B → 'STA111-register → TDO_B. Bit 3 is used for TCK_n configuration, see Table 7.

Table 6. Mode Register Control of LSPN (1)

Mode Register(s)	Scan Chain Configuration (if unparked)
MR0: X000X000	TDI_B → Register → TDO_B
MR0: X000X001	TDI_B → Register → LSP_0 → PAD → TDO_B
MR0: X000X010	TDI_B → Register → LSP_1 → PAD → TDO_B
MR0: X000X011	TDI_B → Register → LSP_0 → PAD → LSP_1 → PAD → TDO_B
MR0: X000X100	TDI_B → Register → LSP_2 → PAD → TDO_B
MR0: X000X101	TDI_B → Register → LSP_0 → PAD → LSP_2 → PAD → TDO_B
MR0: X000X110	TDI_B → Register → LSP_1 → PAD → LSP_2 → PAD → TDO_B
MR0: X000X111	TDI_B → Register → LSP_0 → PAD → LSP_1 → PAD → LSP_2 → PAD → TDO_B
MR0: X010X000	TDI_B → Register → LSP_3 → PAD → TDO_B
MR0: X010X001	TDI_B → Register → LSP_0 → PAD → LSP_3 → PAD → TDO_B
MR0: X010X010	TDI_B → Register → LSP_1 → PAD → LSP_3 → PAD → TDO_B
MR0: X010X011	TDI_B → Register → LSP_0 → PAD → LSP_1 → PAD → LSP_5 → PAD → TDO_B
MR0: X010X100	TDI_B → Register → LSP_2 → PAD → LSP_3 → PAD → TDO_B
...	...
MR0: X110X111	TDI_B → Register → LSP_0 → PAD → LSP_1 → PAD → LSP_2 → PAD → LSP_3 → PAD → LSP_4 → PAD → TDO_B
MR0: X000X000MR1: XXXXX001 (2)	TDI_B → Register → LSP_5 → PAD → TDO_B
MR0: X000X001MR1: XXXXX001 (2)	TDI_B → Register → LSP_0 → PAD → LSP_5 → PAD → TDO_B
MR0: X000X010MR1: XXXXX001 (2)	TDI_B → Register → LSP_1 → PAD → LSP_5 → PAD → TDO_B
...	...
MR0: X110X111MR1: XXXXX001 (2)	TDI_B → Register → LSP_0 → PAD →→ LSP_1 → PAD → LSP_2 → PAD → LSP_3 → PAD → LSP_4 → PAD → LSP_5 → PAD → TDO_B
MR0: X000X000MR1: XXXXX010 (2)	TDI_B → Register → LSP_6 → PAD → TDO_B
...	...
MR0: X110X111MR1: XXXXX111 (2)	TDI_B → Register → LSP_0 → PAD → LSP_1 → PAD → LSP_2 → PAD → LSP_3 → PAD → LSP_4 → PAD → LSP_5 → PAD → LSP_6 → PAD → LSP_7 → PAD → TDO_B
MR0: XXX1XXXXMR1: XXXXXXXX (2)	TDI_B → Register → TDO_B (Loopback)

(1) In a device with 8 LSPs there are 2^8 possible LSPN configurations: No LSPs, each individual LSP, combinations of 2 to 7 LSPs, and all 8 LSPs.
(2) Mode Register$_1$ is only available in the HDL version (up to eight LSPs). The Silicon version has three LSPs and uses Mode Register$_0$ for LSP selection.

Table 7. Test Clock Configuration

Bit 3	LSP n	TCK n
1	Parked	Stopped
0	Parked	Free-running
1	Unparked	Free-running
0	Unparked	Free-running
X	Parked-TLR	Stopped after 512 clock pulses

Copyright © 2001–2013, Texas Instruments Incorporated

Bit 3 is normally set to logic 0 so that TCK_n is free-running when the local scan ports are parked in the *Parked-RTI*, *Parked-Pause-DR* or *Parked-Pause-IR* state. When the local ports are parked, bit 3 can be programmed with logic 1, forcing all of the LSP TCK_n's to stop. This feature can be used in power sensitive applications to reduce the power consumed by the test circuitry in parts of the system that are not under test. When in the *Parked-TLR* state, TCK_n is gated (stopped) after 512 clock pulses have been received on TCK_B independent of the bit 3 value.

Bit 7 is a status bit for the TCK counter. Bit 7 is only set (logic 1) when the TCK counter is on and has reached terminal count (zero). It is cleared (logic 0) when the counter is loaded following a *CNTRSEL* instruction. The power-on value for bit 7 is 0.

Bits 5 and 6 are optional in the HDL to support five LSPs with a single Mode $Register_0$. A second Mode $Register_1$ may be added to allow support of up to eight LSPs.

Table 8. Mode $Register_0$

BIT	7	6	5	4	3	2	1	0
Description	TCK Counter Status	LSP_4	LSP_3	TDI_B to TDO_B Loopback	TCK Free Running Disable	LSP_2	LSP_1	LSP_0
Used in Silicon	Y	N	N	Y	Y	Y	Y	Y
Default Value	0	0	0	0	0	0	0	1

Table 9. Mode $Register_1$

BIT	7	6	5	4	3	2	1	0
Description	Reserved	Reserved	Reserved	Reserved	Reserved	LSP_7	LSP_6	LSP_5
Used in Silicon	N	N	N	N	N	N	N	N
Default Value	0	0	0	0	0	0	0	0

Table 10. Mode $Register_2$

BIT	7	6	5	4	3	2	1	0
Description	$LSP_7/GPIO_7$	$LSP_6/GPIO_6$	$LSP_5/GPIO_5$	$LSP_4/GPIO_4$	$LSP_3/GPIO_3$	$LSP_2/GPIO_2$	$LSP_1/GPIO_1$	$LSP_0/GPIO_0$
Used in Silicon	N	N	N	N	N	Y	Y	Y
Default Value	0	0	0	0	0	0	0	0

DEVICE IDENTIFICATION REGISTER

The device identification register (IDREG) is a 32-bit register compliant with IEEE Std. 1149.1. When the *IDCODE* instruction is active, the identification register is loaded with the Hex value upon leaving the *Capture-DR* state (on the rising edge of the TCK_B). Refer to the currently available BSDL file on our website for the most accurate Device ID.

LINEAR FEEDBACK SHIFT REGISTER

The 'STA111 contains a signature compactor which supports test result evaluation in a multi-chain environment. The signature compactor consists of a 16-bit linear-feedback shift register (LFSR) which can monitor local-port scan data as it is shifted upstream from the 'STA111's local-port network. Once the LFSR is enabled, the LFSR's state changes in a reproducible way as each local-port data bit is shifted in from the local-port network. When all local-port data has been scanned in, the LFSR contains a 16-bit signature value which can be compared against a signature computed for the expected results vector.

The LFSR uses the following feedback polynomial:

$$F(x) = X^{16} + X^{12} + X^3 + X + 1 \quad (1)$$

Copyright © 2001–2013, Texas Instruments Incorporated

This signature compactor is used to compress serial data shifted in from the local scan chain, into a 16-bit signature. This signature can then be shifted out for comparison with an expected value. This allows users to test long scan chains in parallel, via Broadcast or Multi-Cast addressing modes, and check only the 16-bit signatures from each module. The LFSR is initialized with a value of 0000 Hex upon reset.

32-BIT TCK COUNTER REGISTER

The 32-bit TCK counter register enables BIST testing that requires n TCK cycles, to be run on a parked LSP while another 'STA111 port is being tested. The *CNTRSEL* instruction can be used to load a count-down value into the counter register via the active scan chain. When the counter is enabled (via the *CNTRON* instruction), and the LSP is parked, the local TCKs will stop and be held low when terminal count is reached.

The TCK counter is initialized with a value of 00000000 Hex upon reset.

Table 11. Dedicated GPIO Register$_n$ (HDL only)

BIT	7	6	5	4	3	2	1	0
Description	Input	Input	Input	Input	Output	Output	Output	Output

Table 12. Shared GPIO Register$_n$

BIT	7	6	5	4	3	2	1	0
Description	Reserved	Reserved	Reserved	Reserved	Reserved	Input (TDI)	Output (TDO)	Output (TMS)
Used in Silicon	N	N	N	N	N	Y	Y	Y
Default Value	0	0	0	0	0	0	0	0

SPECIAL FEATURES

TRANSPARENT MODE

While this mode is activated, the selected LSP n ports will follow the backplane ports. $\overline{TRST}_n$ is a buffered version of $\overline{TRST}_B$, TCK_n is a buffered version of TCK_B, TMS_n is a buffered version of TMS_B, TDO_n is a buffered version of TDI_B and TDO_B is a buffered version of TDI_n. $TRIST_B$ and $TRIST_n$ are asserted when the state machine is in either the *Shift-DR* or *Shift-IR* states. The unselected LSPs are placed in the *PARKTLR* state, and their clocks are gated after 512 TCK_B clock cycles.

Transparent Mode is controlled by 8 new instructions, *TRANSPARENT0* through *TRANSPARENT7*. Transparent Mode overrides any other active mode. When one of the transparent mode instruction is shifted into the instruction register and the tap controller goes through the *UPDATE-IR* state, $\overline{TRST}_n$ will go high, and TMS_n will go low. This will force the targets connected to the LSP_n ports to go into the *RTI* state. Then as the 'STA111 state machine goes into the *RTI* state, all of the LSP_n signals will follow the back-plane signals. This is identical to the method that is typically used to unpark an LSP. The 'STA111 will remain in this mode until a $\overline{TRST}_B$ is asserted or a power cycle forces a reset. Once in the Transparent Mode, the 'STA111 will not be able to be reset by a 5 TMS high reset.

The sequence of operations to use Transparent Mode on an LSP are as follows (example uses LSP_0):

1. IR-Scan the 'STA111 address into the instruction register (address a 'STA111).
2. IR-Scan the *TRANSPARENT0* instruction to enable Transparent Mode on LSP_0. Transparent Mode is enabled when the TAP enters the *RTI* state at the end of this shift operation ($\overline{TRST}_0$, TDO_0, TMS_0 and TCK_0 become buffered versions of $\overline{TRST}_B$, TDI_B, TMS_B and TCK_B and TDO_B becomes a buffered version of TDI_0).

NOTE

Transparent Mode will persist until the 'STA111 is reset using $\overline{TRST}_B$. The *GOTOWAIT* and *SOFTRESET* instructions will not work in this mode.

BIST SUPPORT

The sequence of instructions to run BIST testing on a parked SCANSTA111 port is as follows:

1. Pre-load the Boundary register of the device under test if needed.
2. Issue the *CNTRSEL* instruction and initialize (load) the TCK counter to 00000000 Hex. Note that the TCK counter is initialized to 00000000 Hex upon *Test-Logic-Reset*, so this step may not be necessary.
3. Issue the *CNTRON* instruction to the 'STA111, to enable the TCK counter.
4. Shift the *PARKRTI* instruction into the 'STA111 instruction register and *BIST* instruction into the instruction register of the device under test. With the counter on (at terminal count) and the LSP parked, the local TCK is gated.
5. Issue the *CNTRSEL* instruction to the 'STA111.
6. Load the TCK counter (Shift the 32-bit value representing the number of TCK_n cycles needed to execute the BIST operation into the TCK counter register). The Self test will begin on the rising edge of TCK_B following the *Update-DR* TAP controller state.
7. Bit 7 of Mode $Register_0$ can be scanned to check the status of the TCK counter, (*MODESEL* instruction followed by a *Shift-DR*). Bit 7 logic 0 means the counter has not reached terminal count, logic 1 means that the counter has reached terminal count and the BIST operation has completed.
8. Execute the *CNTROFF* instruction.
9. Unpark the LSP and scan out the result of the BIST operation

RESET

Reset operations can be performed at three levels. The highest level resets all 'STA111 registers and all of the local scan chains of selected and unselected 'STA111s. This Level 1 reset is performed whenever the 'STA111 TAP Controller enters the *Test-Logic-Reset* state. *Test-Logic-Reset* can be entered synchronously by forcing TMS_B high for at least five (5) TCK_B pulses, or asynchronously by asserting the $TRST_B$ pin. A Level 1 reset forces all 'STA111s into the *Wait-For-Address* state, parks all local scan chains in the *Test-Logic-Reset* state, and initializes all 'STA111 registers.

The *SOFTRESET* instruction is provided to perform a Level 2 reset of all LSP's of selected 'STA111s. *SOFTRESET* forces all TMS_n signals high, placing the corresponding local TAP Controllers in the *Test-Logic-Reset* state within five (5) TCK_B cycles.

The third level of reset is the resetting of individual local ports. An individual LSP can be reset by parking the port in the *Test-Logic-Reset* state via the *PARKTLR* instruction. To reset an individual LSP that is parked in one of the other parked states, the LSP must first be unparked via the *UNPARK* instruction.

PORT SYNCHRONIZATION

When a LSP is not being accessed, it is placed in one of the four TAP Controller states: *Test-Logic-Reset*, *Run-Test/Idle*, *Pause-DR*, or *Pause-IR*. The 'STA111 is able to park a local chain by controlling the local Test Mode Select outputs ($TMS_{(0-2)}$) (see Figure 4). TMS_n is forced high for parking in the *Test-Logic-Reset* state, and forced low for parking in *Run-Test/Idle*, *Pause-IR*, or *Pause-DR* states. Local chain access is achieved by issuing the *UNPARK* instruction. The LSPs do not become unparked until the 'STA111 TAP Controller is sequenced through a specified synchronization state. Synchronization occurs in the *Run-Test/Idle* state for LSPs parked in *Test-Logic-Reset* or *Run-Test/Idle*; and in the *Pause-DR* or *Pause-IR* state for ports parked in *Pause-DR* or *Pause-IR*, respectively.

Figure 11 and Figure 12 show the waveforms for synchronization of a local chain that was parked in the *Test-Logic-Reset* state. Once the *UNPARK* instruction is received in the instruction register, the LSPC forces TMS_n low on the falling edge of TCK_B .

Copyright © 2001–2013, Texas Instruments Incorporated

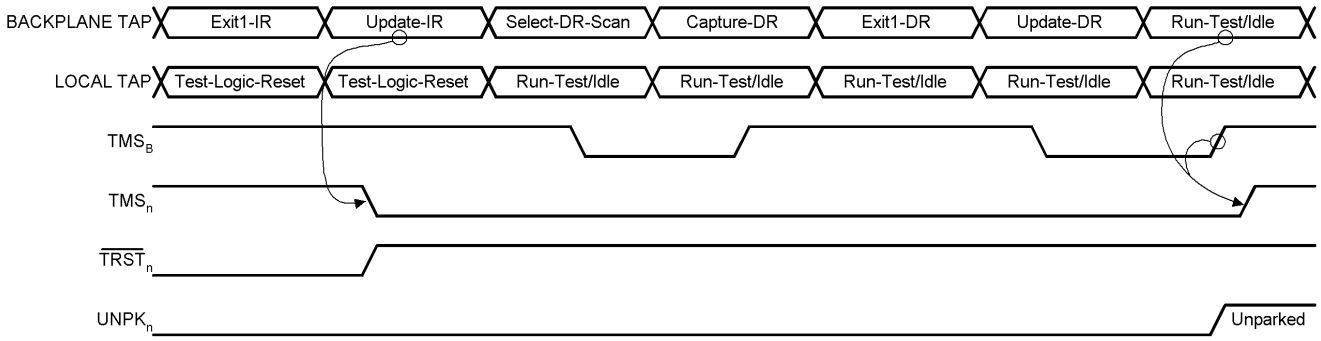

Figure 11. Local Scan Port Synchronization on Second Pass

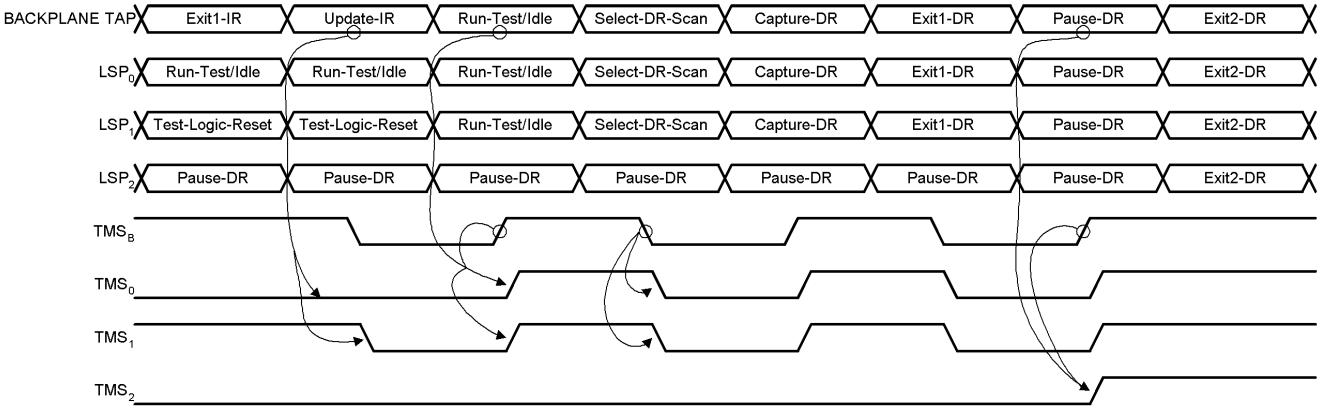

Figure 12. Synchronization of the Three Local Scan Ports

This moves the local chain TAP Controllers to the synchronization state (*Run-Test/Idle*), where they stay until synchronization occurs. If the next state of the 'STA111 TAP Controller is *Run-Test/Idle*, TMS_n is connected to TMS_B and the local TAP Controllers are synchronized to the 'STA111 TAP Controller as shown in Figure 12. If the next state after *Update-IR* were *Select-DR*, TMS_n would remain low and synchronization would not occur until the 'STA111 TAP Controller entered the *Run-Test/Idle* state, as shown in Figure 11.

Each local port has its own Local Scan Port Controller. This is necessary because the LSPN can be configured in any one of eight (8) possible combinations. Either one, some, or all of the local ports can be accessed simultaneously. Configuring the LSPN is accomplished with Mode $Register_0$, in conjunction with the *UNPARK* instruction.

The LSPN can be unparked in one of seven different configurations (Si device), as specified by bits 0-2 of Mode $Register_0$. Using multiple ports presents not only the task of synchronizing the 'STA111 TAP Controller with the TAP Controllers of an individual local port, but also of synchronizing the individual local ports to one another.

When multiple local ports are selected for access, it is possible that two ports are parked in different states. This could occur when previous operations accessed the two ports separately and parked them in the two different states. The LSP Controllers handle this situation gracefully. Figure 12 shows the *UNPARK* instruction being used to access LSP_0, LSP_1, and LSP_2 in series (Mode $Register_0$ = XXX0X111 binary). LSP_0 and LSP_1 become active as the 'STA111 controller is sequenced through the *Run-Test/Idle* state. LSP_2 remains parked in the *Pause-DR* state until the 'STA111 TAP Controller is sequenced through the *Pause-DR* state. At that point, all three local ports are synchronized for access via the active scan chain.

Copyright © 2001–2013, Texas Instruments Incorporated

PARAMETERIZED DESIGN (HDL)

In order to support a large number of applications, the 'STA111 HDL is parameterized as described:

- **Number of Local Scan Ports (LSPs):** The 'STA111 HDL is able to simulate/synthesize a device that contains from 1 to 8 LSPs. LSP_0 through LSP_4 are controlled via Mode $Register_0$ and LSP_5 through LSP_7 are controlled via Mode $Register_1$. The silicon version of the 'STA111 is synthesized with three LSPs, LSP_0 through LSP_2.
- **Number of Address Pins:** The 'STA111 has a selectable number of address bits (S_0 - S_n, where n can range from 5 to 7). Addresses 3A through 3F hex are reserved for address interrogation, broadcast and multi-cast addressing. The silicon version of the 'STA111 is synthesized with seven address pins.
- **Pass-Through Pins:** Each of the LSPs (0-n) may selectively have or not have Pass-through pins. Pass-through pins are described in more detail below. The silicon version of the 'STA111 is synthesized with Pass-through pins on LSP_0 and LSP_1.
- **Number/Type of GPIO bits:** The 'STA111 has both dedicated and shared GPIO (General Purpose I/O). Each dedicated group of GPIO bits supports from 0 to 4 dedicated inputs and 0 to 4 dedicated outputs. There are provisions for specifying the default (power-up) value. $TMS_{(0-n)}$, $TDO_{(0-n)}$ and $TDI_{(0-n)}$ are also dual purpose pins functioning as LSP or GPIO. TMS_n and TDO_n are outputs, TDI_n is an input in the GPIO mode. The silicon version of the 'STA111 is synthesized with shared GPIO on all three available LSPs. The silicon version of the 'STA111 does not support dedicated GPIO.

Throughout this datasheet, notations exist to clarify the differences between features available on the Silicon version and the HDL version.

KNOWN POWER-UP STATE

The 'STA111 has a known power-up condition. This is the same state that the device is in after a $\overline{TRST}$ reset. This happens at power-up without the presence of a TCK_B.

Reset can also occur via a 5 TMS high reset or a *SOFTRESET* command.

POWER-OFF HIGH IMPEDANCE INPUTS AND OUTPUTS

The 'STA111 backplane test port features power-off high impedance inputs and outputs.

The TDI_B, TMS_B, and $\overline{TRST}_B$ inputs have a 25KΩ pull-up resistor and no ESD clamp diode (ESD is controlled with an alternate method). When the device is power-off (V_{DD} floating), these inputs appear to be a capacitive load to ground. When V_{DD} = 0V (i.e.; not floating but tied to V_{SS}) these inputs appear to be capacitive with the pull-up to ground.

The TCK_B input has no pull-up resistor and no ESD clamp diode (ESD is controlled with an alternate method). When the device is power-off (V_{DD} floating), the input appears to be a capacitive load to ground. When V_{DD} = 0V (i.e.; not floating but tied to V_{SS}) the input appears to be a capacitive load to ground.

When the device is power-off (V_{DD} = 0V or floating), the TDO_B output appears to be a capacitive load.

TRST

$\overline{TRST}_B$: Assertion of $\overline{TRST}_B$ will return the device back to its known power-up state.

$\overline{TRST}_n$: $\overline{TRST}_n$ is an output on the LSP side of the 'STA111. While the LSP state-machine (level 2 protocol) is in the *Parked-TLR* state the $\overline{TRST}_n$ pin will be driven low. In all other states the $\overline{TRST}_n$ pin will be driven high.

PHYSICAL LAYER CHANGES

TRIST for TDO_B and TDO_n are signals for enabling an external buffer circuit between the 'STA111 and the backplane/LSP. This would allow, for example, a CMOS-to-LVDS converter to drive an LVDS JTAG backplane test bus. These signals are always driving. A separate TRIST is provided for each LSP to report a TRI-STATE on TDO when the LSP is not in a shift state.

Copyright © 2001–2013, Texas Instruments Incorporated

SVF DRIVEN, SELF-CHECKING TEST BENCH

The 'STA111 consists of 3 types of pins, dot1 backplane pins, dot1 LSP pins and support pins. The command interpreter of the test bench is able to translate a limited set of SVF commands to the dot1 backplane pins. The SVF shift commands contain both the stimulus (TDI_B) and expected response (TDO_B).

The interpreter is able to parse the following commands: *ENDDR*, *ENDIR*, *RUNTEST*, *SDR*, *SIR*, *STATE*, *TRST*.

PASS-THROUGH PINS

Each LSP may selectively have two pass-through pins. The pair of pass-through pins consist of an input (A_n) and an output (Y_n). The LSP pass-through output (Y_n) drives the level being received by the backplane pass-through input (A_B). Conversely, the level on the LSP pass-through input (A_n) drives the backplane pass-through output (Y_B).

The Pass-through pins are available only when a single LSP is selected. For each LSP these pins will be enabled when the level 2 protocol state-machine is not in the *Parked-TLR* state. When not enabled they are TRI-STATED.

LSP GATING

While the LSP state-machine (level 2 protocol) is in the *Parked-TLR* state, the four LSP signals shall be controlled as shown in Table 13 below. Upon entry into the *Parked-TLR* state (*power-up*, *reset*, *PARKTLR* or *GOTOWAIT*) a counter in the LSP state-machine allows 512 TCK_B clock pulses to occur on TCK_n before gating. Once gated, TCK_n will drive a logic 0.

Letting 512 TCK_B pulses pass through to TCK_n allows a five high TMS reset to occur on over 100 levels of hierarchy before the 'STA111 gates TCK_n (for power saving in a free-running clock system).

Table 13. Gated LSP Drive States

LSP Connection	Drive State
TDO_n	Pull-up resistor to provide a weak HIGH
TMS_n	Pull-up resistor to provide a weak HIGH
TDI_n	Pull-up resistor to provide a weak HIGH
TCK_n	TCK_B for 512 pulses, then gated LOW

The 'STA111 does not require that any clock pulses are received on TCK_B while in the *Parked-TLR* state.

Setting Bit 3 of Mode $Register_0$ to 1 gates TCK_n when in the *Parked-RTI*, *Parked-Pause-DR* and *Parked-Pause-IR* states. Default is free-running (bit 3 = 0). The value stored in bit 3 of Mode $Register_0$ does not effect the requirement of 512 clock pulses before gating TCK_n in the *Parked-TLR* state. (See section on MODE $REGISTER_0$).

IEEE 1149.4 SUPPORT

The 'STA111 provides support for a switched analog bus. Each LSP has an unparked-TLR notification pin ($LSP_ACTIVE_{(0-2)}$) which is low (0) when the LSP is in *Parked-TLR* and high (1) otherwise. This signal can be used to enable/disable analog switches external to the 'STA111.

GPIO CONNECTIONS

General Purpose I/O (GPIO) pins are registered inputs and outputs that are parameterized in the HDL. The two types of GPIOs than can be used in the 'STA111 are described in the next two sections. The silicon version of the 'STA111 supports shared GPIO on all three available LSPs. The silicon version of the 'STA111 does not support dedicated GPIO.

DEDICATED: Each LSP supports up to four (4) dedicated inputs and up to four (4) dedicated outputs. These are separate, dedicated GPIO signals controlled by dedicated GPIO registers (one register per LSP). The GPIO outputs are updated during the *UPDATE-DR* state and the GPIO input values are written to the corresponding GPIO register during the *CAPTURE-DR* state. Dedicated GPIO operation is not supported in the silicon version of the 'STA111.

Copyright © 2001–2013, Texas Instruments Incorporated

LSP SHARED: In the shared mode of operation, the dot1 LSP pins TDI_n, TDO_n and TMS_n pins become GPIO pins. TMS_n and TDO_n are outputs, TDI_n is an input in the GPIO mode.

The sequence of operations to use shared GPIOs on an LSP are as follows (example uses LSP_0):

1. IR-Scan the 'STA111 address into the instruction register (address a 'STA111).
2. IR-Scan the *$MODESEL_3$* instruction into the instruction register to select Mode $Register_3$ (Shared GPIO configuration register) as the data register.
3. DR-Scan 00000001 into Mode $Register_3$ to enable GPIOs on LSP_0. The GPIOs will be enabled when the TAP enters the *RTI* state at the end of this shift operation (TDO_0 and TMS_0 will be forced to logic 0 as defined by the default value in the Shared GPIO $Register_0$).
4. IR-Scan the *$SGPIO_0$* instruction into the instruction register to select the Shared GPIO $Register_0$ as the data register.
5. DR-Scan 00000011 into the Shared GPIO $Register_0$ to set TDO_0 and TMS_0 to a logic 1 (when TAP enters *Update-DR*). During this operation, when the TAP enters *Capture-DR*, the present value on the TDI_0 pin and the values of TDO_0 and TMS_0 (as set by Shared GPIO $Register_0$) will be captured into bits 2, 1 and 0 of the shift register and will be scanned out 00000X00 (X = value present on TDI_0 when TAP enters *Capture-DR*).
6. Step 5 can be repeated to generate waveforms on TDO_0 and TMS_0. If step 5 was repeated with 00000000 as data, TDO_0 and TMS_0 would be set to a logic 0 (when TAP state = *Update-DR*) and 00000X11 would be scanned out (X = value present on TDI_0 when TAP enters *Capture-DR*).
7. IR-Scan the *GOTOWAIT* or *SOFTRESET* instruction, or generate a $\overline{TRST}_B$ reset to disable the GPIOs.

ADDRESS INTERROGATION

The 'STA111 has four states that it can go to from the *Wait-For-Address* state: *Unselected*, *Singularly-selected*, *Multi/Broadcast-selected*, and *Address-interrogation* (see Figure 13).

After a reset (or *GOTOWAIT* command) has been issued, the 'STA111 TAP is sequenced to the *Capture-IR* state where XXXXXX01 is loaded into the shift register. Upon entering the *Shift-IR* state, the instruction register is filled with the address interrogation value (3A hex) which is loaded into the address register as the TAP is sequenced into the *Update-IR* state. On the next loop through *Capture-IR* the shift register is loaded with the ones-complement of the slot address. In the *Shift-IR* state the address interrogation value is loaded into the instruction register. The value presented on TDO_B will be a wired-and address of all of the 'STA111s on the bus. As this value is being shifted out, each 'STA111 will monitor its TDO_B to see if it is receiving the same value it is driving. If the device shifts all bits of its ones-complement address and never gets a compare error it will tri-state TDO_B and go to the *Wait-For-Reset* state. Alternately, if the device sees a compare error while it is shifting its ones-complement address it will stop shifting its address and tri-state TDO_B until the next shift operation; during the next *Shift-IR* operation it will again try to present its address (if the previous instruction was 3A hex) while monitoring TDO_B.

Shifting 3A hex into the instruction registers of the 'STA111s will continue until all 'STA111s have presented their address. At this time all devices will be waiting to be reset, and if a 3A is shifted into the 'STA111 instruction registers the address read by the tester will be all weak 1s due to all TDO_B's being tri-stated. Reading all ones will signal the tester that address interrogation is complete. Since all ones signifies the end of *Address-Interrogation*, no device can have an address of all zeros (ones-complement).

If at any time, during the address interrogation mode, any other instruction besides 3A hex is shifted into the instruction register, then the 'STA111 will exit the interrogation mode. Also, the 'STA111's state machine will go to the *Wait-For-Address* state.

This address interrogation scheme presumes that TDO_B is capable of driving a weak 1 and that an 'STA111 driving a 0 will overdrive an 'STA111 driving a weak 1.

The following is an example of the *Address-Interrogation* function. Assume there are three 'STA111s (U1, U2 and U3) on a dot1 backplane with slot addresses 010100, 100000 and 000001 respectively (assuming 6 address pins).

1. The 'STA111s are reset and the interrogation address/op-code (3A hex) is shifted into the instruction registers.
2. At the end of the instruction shift (*Update-IR*) the 'STA111 address registers are loaded with 3A hex.
3. The TAPs are sequenced to *Capture-IR* and the shift registers latch the ones-complement slot addresses (U1=101011, U2=011111 and U3=111110).

 Copyright © 2001–2013, Texas Instruments Incorporated

4. The TAPs are sequenced to *Shift-IR* and the LSB of the interrogation address is presented on the TDI_B's. Concurrently, the LSBs of the ones-complement slot addresses are presented on the respective TDO_B's.
5. The weak 1 being driven on U1 and U2 is overdriven by the 0 from U3. U1 and U2 enter the *Wait-For-Next-Interrogation* state.
6. The shift operation continues and U3 finishes shifting its ones-complement address (111110) out on TDO_B. U3 enters the *Wait-For-Reset* state when the TAP enters *Update-IR*.
7. The TAPs are again sequenced to *Capture-IR* and U1 and U2 shift registers latch the ones-complement addresses (U1=101011, U2=011111).
8. The TAPs are sequenced to *Shift-IR* and the LSB of the interrogation address is presented on the TDI_B's. Concurrently, the LSBs of the ones-complement addresses are presented on the respective TDO_B's.
9. Since both U1 and U2 are driving a weak 1 the shift continues.
10. Again U1 and U2 drive weak 1 and the shift continues.
11. U2s weak 1 is overdriven by U1s 0 and U2 enters the *Wait-For-Next-Interrogation* state.
12. The shift operation continues and U1 finishes shifting its ones-complement address (101011) out on TDO_B. U1 enters the*Wait-For-Reset* state.
13. The instruction shift operation is repeated and U2 shifts its ones-complement address (011111) out on TDO_B. U2 enters the *Wait-For-Reset* state.
14. The instruction shift operation is repeated, however, all devices have been interrogated and are waiting for a reset. The master device will receive all ones. This implies that there can not be an STA111 with address 0!

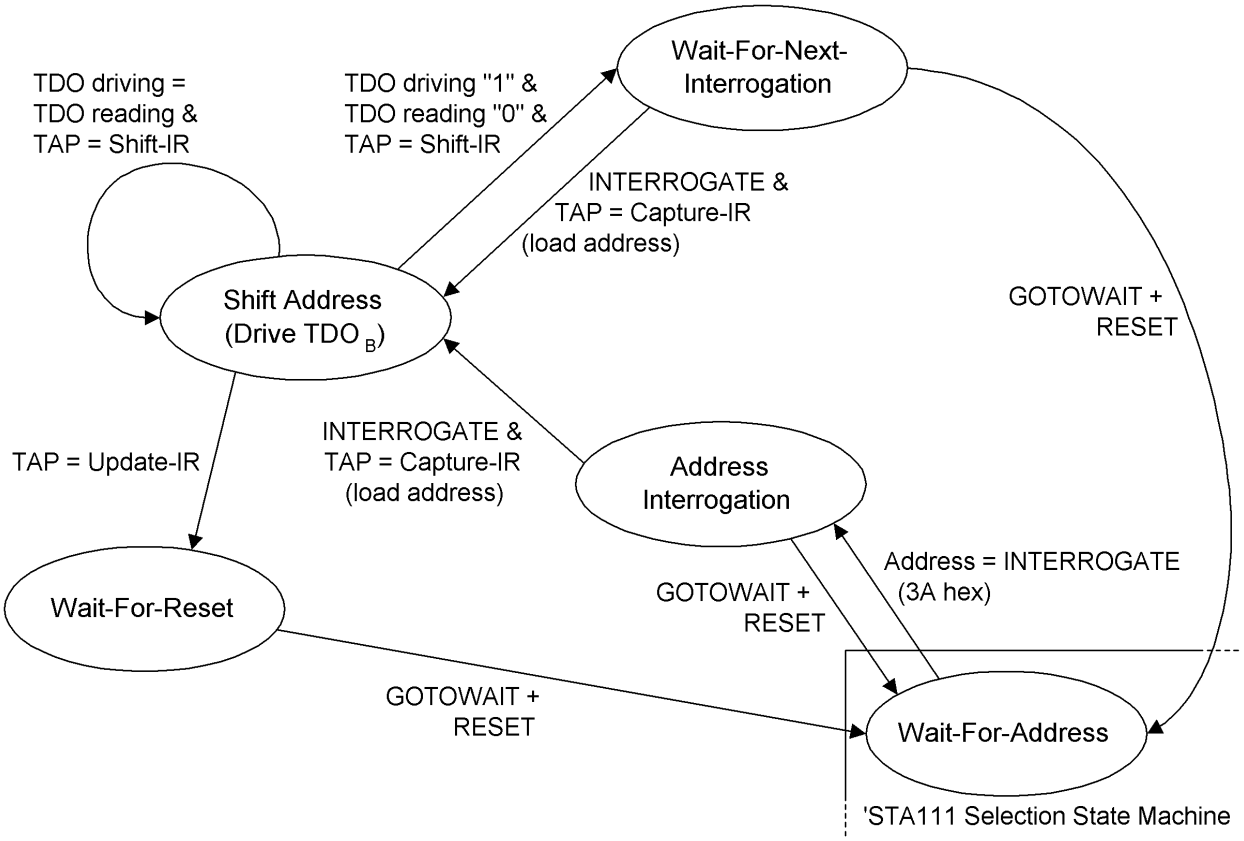

Figure 13. Address Interrogation State Machine

These devices have limited built-in ESD protection. The leads should be shorted together or the device placed in conductive foam during storage or handling to prevent electrostatic damage to the MOS gates.

ABSOLUTE MAXIMUM RATINGS (1)

Supply Voltage (V_{CC})		−0.3V to +4.0V
DC Input Diode Current (I_{IK})	V_I = −0.5V	−20 mA
DC Input Voltage (V_I)		−0.5V to +3.9V
DC Output Diode Current (I_{OK})	V_O = −0.5V	−20 mA
DC Output Voltage (V_O)		−0.3V to +3.9V
DC Output Source/Sink Current (I_O)		±50 mA
DC V_{CC} or Ground Current per Output Pin		±50 mA
DC Latchup Source or Sink Current		±300 mA
Junction Temperature (Plastic)		+150°C
Storage Temperature		−65°C to +150°C
Lead Temperature (Solder, 4sec)	49L BGA	235°C
	48L TSSOP	260°C
Max Pkg Power Capacity @ 25°C	49L BGA	1.47 W
	48L TSSOP	1.47 W
Thermal Resistance (θ_{JA})	49L BGA	85°C/W
	48L TSSOP	85°C/W
Package Derating		11.8 mW/°C above 25°C
ESD Last Passing Voltage (Min)	I/O	2000V
	Inputs	1000V

(1) Absolute maximum ratings are those values beyond which damage to the device may occur. The databook specifications should be met, without exception, to ensure that the system design is reliable over its power supply, temperature, and output/input loading variables. Texas Instruments does not recommend operation of SCAN STA products outside of recommended operation conditions.

RECOMMENDED OPERATING CONDITIONS

Supply Voltage (V_{CC})	'STA111	3.0V to 3.6V
Input Voltage (V_I)		0V to V_{CC}
Output Voltage (V_O)		0V to V_{CC}
Operating Temperature (T_A)	Industrial	−40°C to +85°C

DC ELECTRICAL CHARACTERISTICS

Over recommended operating supply voltage and temperature ranges unless otherwise specified

Symbol	Parameter	Conditions	Min	Max	Units
V_{IH}	Minimum High Input Voltage	V_{OUT} = 0.1V or V_{CC} −0.1V	2.1		V
V_{IL}	Maximum Low Input Voltage	V_{OUT} = 0.1V or V_{CC} −0.1V		0.8	V
V_{OH}	Minimum High Output Voltage (TDO_B, $TCK_{(0-2)}$, $TMS_{(0-2)}$, $TDO_{(0-2)}$, $Y_{(0-1)}$)	I_{OUT} = −100 µA V_{IN} (TDI_B, TMS_B, TCK_B) = V_{IH}	V_{CC} - 0.2v		V
V_{OH}	Minimum High Output Voltage (TDO_B, $TCK_{(0-2)}$, $TMS_{(0-2)}$, $TDO_{(0-2)}$, $Y_{(0-1)}$, Y_B, $\overline{TRST}_{(0-2)}$)	I_{OUT} = −24 mA, V_{IN} on $S_{(0-6)}$ and $TDI_{(0-2)}$ = V_{IH}, V_{IL}All Outputs Loaded	2.2		V
V_{OH}	Minimum High Output Voltage ($TRIST_B$, $TRIST_{(0-2)}$, Y_B)	I_{OUT} = −100µA	V_{CC} - 0.2v		V
V_{OH}	Minimum High Output Voltage ($TRIST_B$, $TRIST_{(0-2)}$, $LSP_ACTIVE_{(0-2)}$)	I_{OUT} = −12mA. All Outputs Loaded	2.4		V
V_{OL}	Maximum Low Output Voltage (TDO_B, $TCK_{(0-2)}$, $TMS_{(0-2)}$, $TDO_{(0-2)}$, $Y_{(0-1)}$)	I_{OUT} = +100 µA, V_{IN} (TDI_B, TMS_B, TCK_B) = V_{IL}		0.2	V
V_{OL}	Maximum Low Output Voltage (TDO_B, $TCK_{(0-2)}$, $TMS_{(0-2)}$, $TDO_{(0-2)}$, $Y_{(0-1)}$, Y_B, $\overline{TRST}_{(0-2)}$)	I_{OUT} = +24 mA, V_{IN} on $S_{(0–6)}$ and $TDI_{(0-2)}$ = V_{IH}, V_{IL}, All Outputs Loaded		0.55	V

Copyright © 2001–2013, Texas Instruments Incorporated

DC ELECTRICAL CHARACTERISTICS (continued)

Over recommended operating supply voltage and temperature ranges unless otherwise specified

Symbol	Parameter	Conditions	Min	Max	Units
V_{OL}	Maximum Low Output Voltage ($TRIST_B$, $TRIST_{(0-2)}$, Y_B)	I_{OUT} = +100 µA		0.2	V
V_{OL}	Maximum Low Output Voltage ($TRIST_B$, $TRIST_{(0-2)}$, $LSP_ACTIVE_{(0-2)}$)	I_{OUT} = +12 mA All Outputs Loaded		0.4	V
I_{IN}	Maximum Input Leakage Current (TCK_B, $S_{(0-6)}$)	$V_{IN} = V_{CC}$ or GND		±5.0	µA
I_{CCT}	Maximum I_{CC}/Input	$V_{IN} = V_{CC} - 0.6V$		250	µA
I_{CC}	Maximum Quiescent Supply Current	TDI_B, TMS_B, $\overline{TRST}_B$, $TDI_{(0-2)}$ = V_{CC} or GND		1.65	mA
I_{CCD}	Maximum Dynamic Supply Current			130	mA
I_{OFF}	Power Off Leakage Current TDO_B, $TCK_{(0-2)}$, $TMS_{(0-2)}$, $TDO_{(0-2)}$, $\overline{TRST}_{(0-2)}$	V_{CC} = GND, V_{IN} = 3.6V		±5.0	µA
I_{ILR}	$TDI_{(0-2)}$, TDI_B, $\overline{OE}$, $\overline{TRST}_B$, $A_{(0-1)}$, A_B, TMS_B	V_{IN} = GND	-45	-180	µA
I_{IH}	$TDI_{(0-2)}$, TDI_B, $\overline{OE}$, $\overline{TRST}_B$, $A_{(0-1)}$, A_B, TMS_B	$V_{IN} = V_{CC}$		+5.0	µA
I_{OZ}	Maximum TRI-STATE Leakage Current	V_{IN} ($\overline{OE}$) = V_{IH}, V_{IN} ($\overline{TRST}_B$) = V_{IL}, $V_O = V_{CC}$, GND		±5.0	µA

AC ELECTRICAL CHARACTERISTICS

Over recommended operating supply voltage and temperature ranges unless otherwise specified.

Symbol	Parameter	Conditions	Typ	Max	Units
t_{PHL1}, t_{PLH1}	Propagation Delay TCK_B to $TCK_{(0-2)}$		8.0	12.0	ns
t_{PHL2}, t_{PLH2}	Propagation Delay TCK_B to $TDO_{(0-2)}$		11.5	16.0	ns
t_{PLH3}	Propagation Delay $\overline{TRST}_B$ to $TMS_{(0-2)}$		13.5	19.0	ns
t_{PHL4}	Propagation Delay $\overline{TRST}_B$ to $\overline{TRST}_{(0-2)}$		13.0	19.0	ns
t_{PHL5}, t_{PLH5}	Propagation Delay TCK_B to TDO_B		10.5	15.0	ns
t_{PHL6}, t_{PLH6}	Propagation Delay A_B to $Y_{(0-1)}$		5.0	9.0	ns
t_{PHL7}, t_{PLH7}	Propagation Delay $A_{(0-1)}$ to Y_B		6.5	10.0	ns
t_{PHL8}, t_{PLH8}	Propagation Delay TCK_B to $LSP_ACTIVE_{(0-2)}$		13.0	19.0	ns
t_{PZL9}, t_{PZH9}	Enable Time TCK_B to $TDO_{(0-2)}$		12.0	17.0	ns
t_{PLZ10}, t_{PHZ10}	Disable Time TCK_B to $TDO_{(0-2)}$		11.5	16.0	ns
t_{PHL11}, t_{PLH11}	Propagation Delay TCK_B to $TRIST_{(0-2)}$		11.5	17.0	ns
t_{PZL12}, t_{PZH12}	Enable Time TCK_B to TDO_B		12.5	17.0	ns
t_{PLZ13}, t_{PHZ13}	Disable Time TCK_B to TDO_B		12.5	17.0	ns
t_{PHL14}, t_{PLH14}	Propagation Delay TCK_B to $TRIST_B$		12.5	18.0	ns
t_{PHL15}, t_{PLH15}	Propagation Delay TMS_B to $TMS_{(0-2)}$		7.0	11.0	ns
t_{PHL16}, t_{PLH16}	Propagation Delay TDI_B to $TDO_{(0-2)}$		7.0	11.0	ns
t_{PZL17}, t_{PZH17}	Enable Time $\overline{OE}$ to $TMS_{(0-2)}$		7.5	11.0	ns
t_{PLZ17}, t_{PHZ17}	Disable Time $\overline{OE}$ to $TMS_{(0-2)}$		5.0	10.0	ns
t_{PZL18}, t_{PZH18}	Enable Time $\overline{OE}$ to $\overline{TRST}_{(0-2)}$		8.0	11.0	ns
t_{PLZ18}, t_{PHZ18}	Disable Time $\overline{OE}$ to $\overline{TRST}_{(0-2)}$		6.5	10.0	ns

Copyright © 2001–2013, Texas Instruments Incorporated

AC ELECTRICAL CHARACTERISTICS (continued)

Over recommended operating supply voltage and temperature ranges unless otherwise specified.

Symbol	Parameter	Conditions	Typ	Max	Units
t_{PZL19}, t_{PZH19}	Enable Time $\overline{OE}$ to $TDO_{(0-2)}$		8.5	12.0	ns
t_{PLZ19}, t_{PHZ19}	Disable Time $\overline{OE}$ to $TDO_{(0-2)}$		7.5	12.0	ns
t_{PHL20}, t_{PLH20}	Propagation Delay $\overline{OE}$ to $TRIST_{(0-2)}$		8.0	13.0	ns
t_{PZL21}, t_{PZH21}	Enable Time $\overline{OE}$ to $TCK_{(0-2)}$		7.5	11.0	ns
t_{PLZ21}, t_{PHZ21}	Disable Time $\overline{OE}$ to $TCK_{(0-2)}$		6.5	10.0	ns

AC ELECTRICAL CHARACTERISTICS

Over recommended operating supply voltage and temperature ranges unless otherwise specified.

Symbol	Parameter	Conditions	Min	Units
t_S	Setup Time, TMS_B to $TCK_B\uparrow$		2.0	ns
t_H	Hold Time, TMS_B to $TCK_B\uparrow$		1.0	ns
t_S	Setup Time, TDI_B to $TCK_B\uparrow$		2.0	ns
t_H	Hold Time, TDI_B to $TCK_B\uparrow$		1.0	ns
t_S	Setup Time, $TDI_{(0-2)}$ to $TCK_B\uparrow$		1.5	ns
t_H	Hold Time, $TDI_{(0-2)}$ to $TCK_B\uparrow$		1.5	ns
t_W	Clock Pulse Width, TCK_B (H or L)		10.0	ns
t_{WL}	Reset Pulse Width, $\overline{TRST}_B$ (L)		2.5	ns
t_{REC}	Recovery Time, $TCK_B\uparrow$ from $\overline{TRST}_B$		2.0	ns
F_{MAX}	Maximum Clock Frequency		25.0	MHz

Copyright © 2001–2013, Texas Instruments Incorporated

AC LOADING AND WAVEFORMS

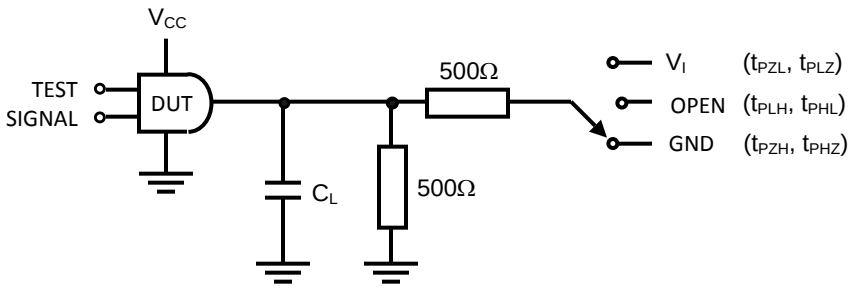

Figure 14. AC Test Circuit (C_L includes probe and jig capacitance)

V_I	C_L
6.0V	50pF

AC Waveforms

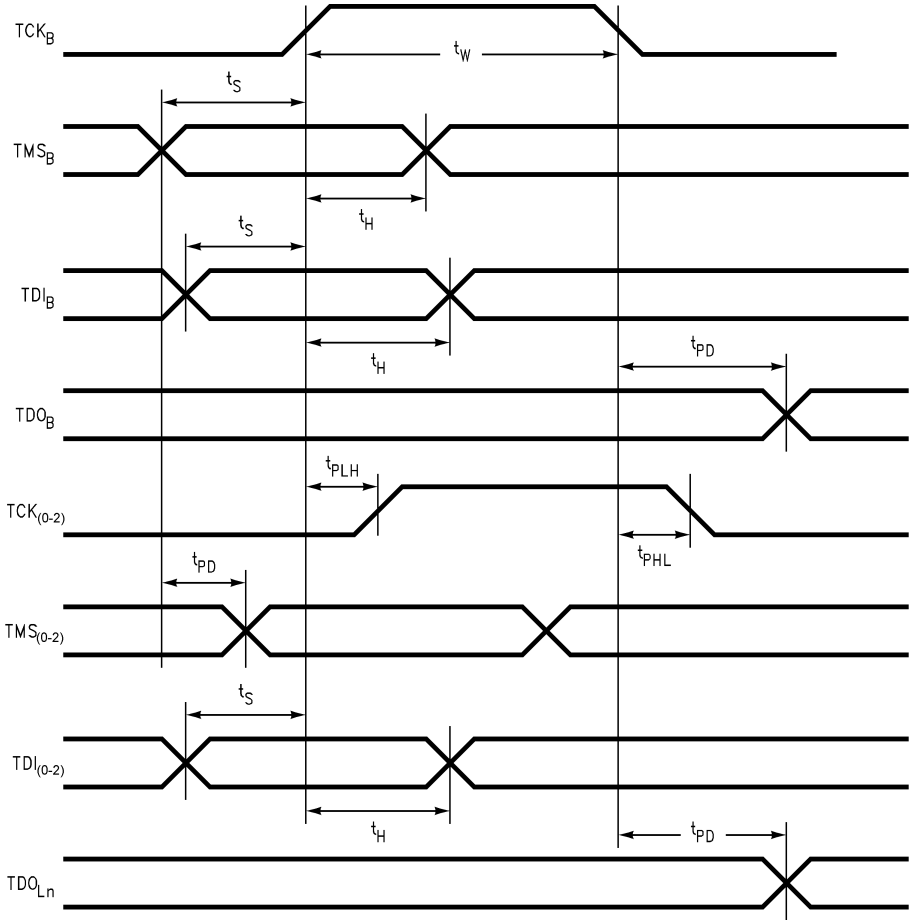

Figure 15. Waveforms for an Unparked STA111 in the Shift-DR (IR) TAP Controller State

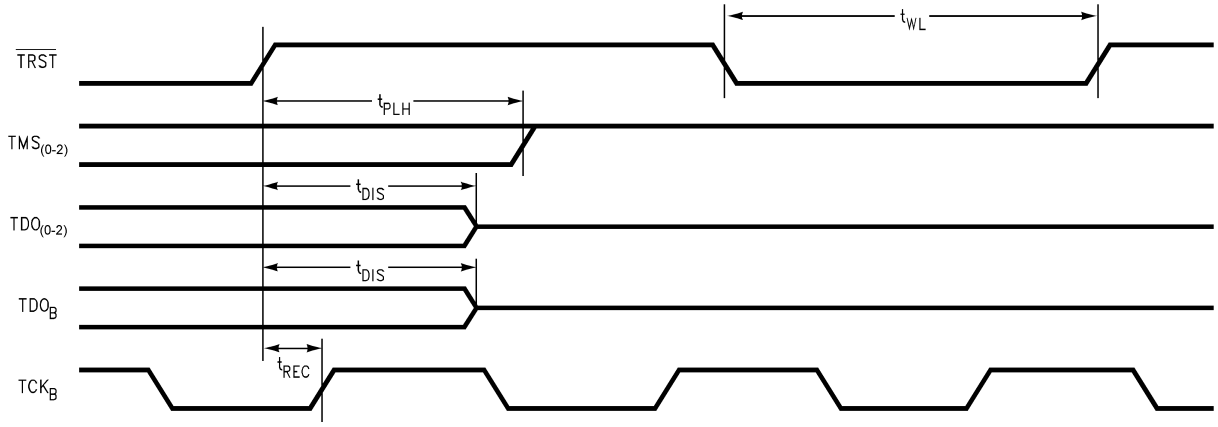

Figure 16. Reset Waveforms

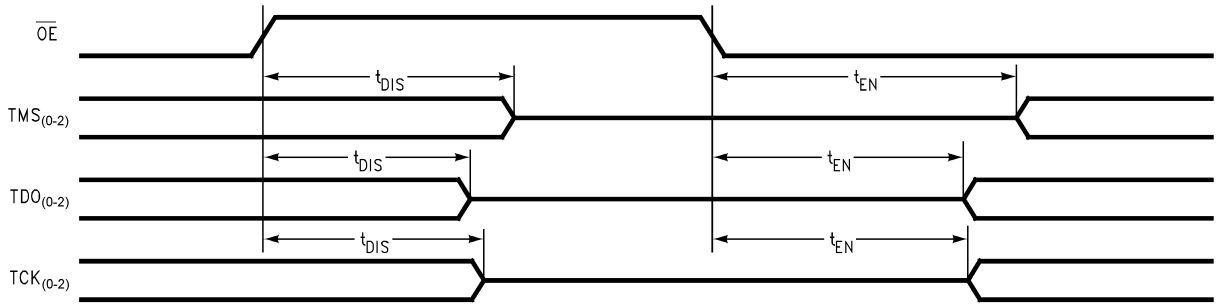

Figure 17. Output Enable Waveforms

Copyright © 2001–2013, Texas Instruments Incorporated

Timing Waveforms
(Input Characteristics; f = 1MHz, $t_r = t_f$ = 2.5ns)

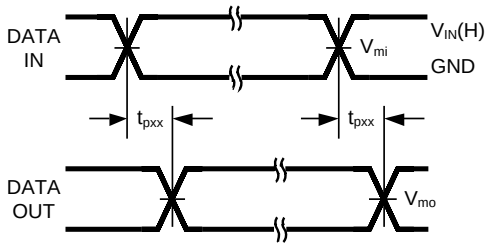

Figure 18. Waveform for Inverting and Non-inverting Functions

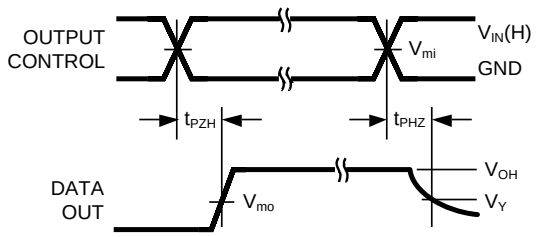

Figure 19. TRI-STATE Output High Enable and Disable Times for Logic

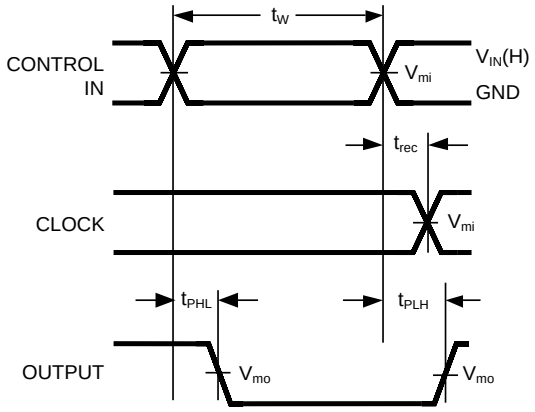

Figure 20. Propagation Delay, Pulse Width and t_{REC} Waveforms

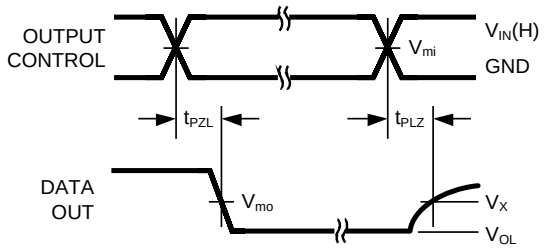

Figure 21. TRI-STATE Output Low Enable and Disable Times for Logic

Symbol	V_{CC}
	2.7 - 3.6V
$V_{IN}(H)$	2.7V
V_{mi}	1.5V
V_{mo}	1.5V
V_x	V_{OL} + 0.3V
V_y	V_{OH} - 0.3V

CAPACITANCE & I/O CHARACTERISTICS

Refer to Texas Instruments' website for IBIS models at http://www.ti.com/lsds/ti/analog/interface.page

REVISION HISTORY

April, 2013 – Changed layout of National Data Sheet to TI format.

February, 2010 – Revisions to clarify shared GPIO operation in the silicon version. No specification changes or changes to operation.

Copyright © 2001–2013, Texas Instruments Incorporated

PACKAGING INFORMATION

Orderable Device	Status (1)	Package Type	Package Drawing	Pins	Package Qty	Eco Plan (2)	Lead/Ball Finish (6)	MSL Peak Temp (3)	Op Temp (°C)	Device Marking (4/5)	Samples
SCANSTA111MT	NRND	TSSOP	DGG	48	38	TBD	Call TI	Call TI	-40 to 85	SCANSTA111MT	
SCANSTA111MT/NOPB	ACTIVE	TSSOP	DGG	48	38	Green (RoHS & no Sb/Br)	CU SN	Level-2-260C-1 YEAR	-40 to 85	SCANSTA111MT	Samples
SCANSTA111MTX/NOPB	ACTIVE	TSSOP	DGG	48	1000	Green (RoHS & no Sb/Br)	CU SN	Level-2-260C-1 YEAR	-40 to 85	SCANSTA111MT	Samples
SCANSTA111SM	NRND	NFBGA	NZA	49	416	TBD	Call TI	Call TI	-40 to 85	SCANSTA111 SM	
SCANSTA111SM/NOPB	ACTIVE	NFBGA	NZA	49	416	Green (RoHS & no Sb/Br)	SNAGCU	Level-4-260C-72 HR	-40 to 85	SCANSTA111 SM	Samples
SCANSTA111SMX	NRND	NFBGA	NZA	49	2000	TBD	Call TI	Call TI	-40 to 85	SCANSTA111 SM	
SCANSTA111SMX/NOPB	ACTIVE	NFBGA	NZA	49	2000	Green (RoHS & no Sb/Br)	SNAGCU	Level-4-260C-72 HR	-40 to 85	SCANSTA111 SM	Samples

(1) The marketing status values are defined as follows:
ACTIVE: Product device recommended for new designs.
LIFEBUY: TI has announced that the device will be discontinued, and a lifetime-buy period is in effect.
NRND: Not recommended for new designs. Device is in production to support existing customers, but TI does not recommend using this part in a new design.
PREVIEW: Device has been announced but is not in production. Samples may or may not be available.
OBSOLETE: TI has discontinued the production of the device.

(2) Eco Plan - The planned eco-friendly classification: Pb-Free (RoHS), Pb-Free (RoHS Exempt), or Green (RoHS & no Sb/Br) - please check http://www.ti.com/productcontent for the latest availability information and additional product content details.
TBD: The Pb-Free/Green conversion plan has not been defined.
Pb-Free (RoHS): TI's terms "Lead-Free" or "Pb-Free" mean semiconductor products that are compatible with the current RoHS requirements for all 6 substances, including the requirement that lead not exceed 0.1% by weight in homogeneous materials. Where designed to be soldered at high temperatures, TI Pb-Free products are suitable for use in specified lead-free processes.
Pb-Free (RoHS Exempt): This component has a RoHS exemption for either 1) lead-based flip-chip solder bumps used between the die and package, or 2) lead-based die adhesive used between the die and leadframe. The component is otherwise considered Pb-Free (RoHS compatible) as defined above.
Green (RoHS & no Sb/Br): TI defines "Green" to mean Pb-Free (RoHS compatible), and free of Bromine (Br) and Antimony (Sb) based flame retardants (Br or Sb do not exceed 0.1% by weight in homogeneous material)

(3) MSL, Peak Temp. - The Moisture Sensitivity Level rating according to the JEDEC industry standard classifications, and peak solder temperature.

(4) There may be additional marking, which relates to the logo, the lot trace code information, or the environmental category on the device.

(5) Multiple Device Markings will be inside parentheses. Only one Device Marking contained in parentheses and separated by a "~" will appear on a device. If a line is indented then it is a continuation of the previous line and the two combined represent the entire Device Marking for that device.

(6) Lead/Ball Finish - Orderable Devices may have multiple material finish options. Finish options are separated by a vertical ruled line. Lead/Ball Finish values may wrap to two lines if the finish value exceeds the maximum column width.

Important Information and Disclaimer: The information provided on this page represents TI's knowledge and belief as of the date that it is provided. TI bases its knowledge and belief on information provided by third parties, and makes no representation or warranty as to the accuracy of such information. Efforts are underway to better integrate information from third parties. TI has taken and continues to take reasonable steps to provide representative and accurate information but may not have conducted destructive testing or chemical analysis on incoming materials and chemicals. TI and TI suppliers consider certain information to be proprietary, and thus CAS numbers and other limited information may not be available for release.

In no event shall TI's liability arising out of such information exceed the total purchase price of the TI part(s) at issue in this document sold by TI to Customer on an annual basis.

TAPE AND REEL INFORMATION

REEL DIMENSIONS

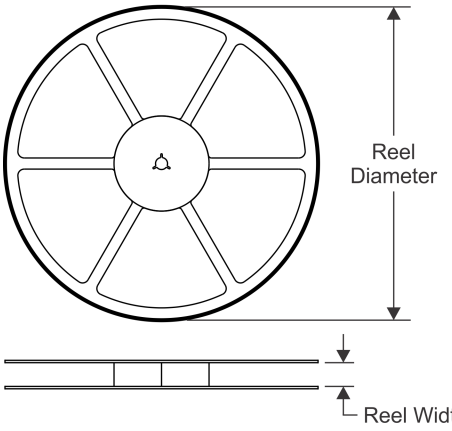

TAPE DIMENSIONS

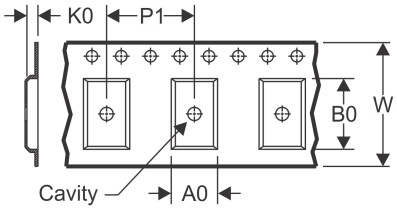

A0	Dimension designed to accommodate the component width
B0	Dimension designed to accommodate the component length
K0	Dimension designed to accommodate the component thickness
W	Overall width of the carrier tape
P1	Pitch between successive cavity centers

QUADRANT ASSIGNMENTS FOR PIN 1 ORIENTATION IN TAPE

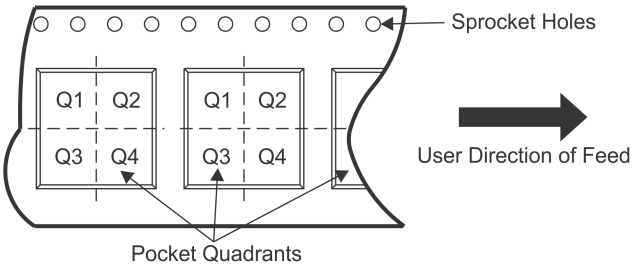

*All dimensions are nominal

Device	Package Type	Package Drawing	Pins	SPQ	Reel Diameter (mm)	Reel Width W1 (mm)	A0 (mm)	B0 (mm)	K0 (mm)	P1 (mm)	W (mm)	Pin1 Quadrant
SCANSTA111MTX/NOPB	TSSOP	DGG	48	1000	330.0	24.4	8.6	13.2	1.6	12.0	24.0	Q1
SCANSTA111SMX	NFBGA	NZA	49	2000	330.0	16.4	7.3	7.3	2.1	12.0	16.0	Q1
SCANSTA111SMX/NOPB	NFBGA	NZA	49	2000	330.0	16.4	7.3	7.3	2.1	12.0	16.0	Q1

TAPE AND REEL BOX DIMENSIONS

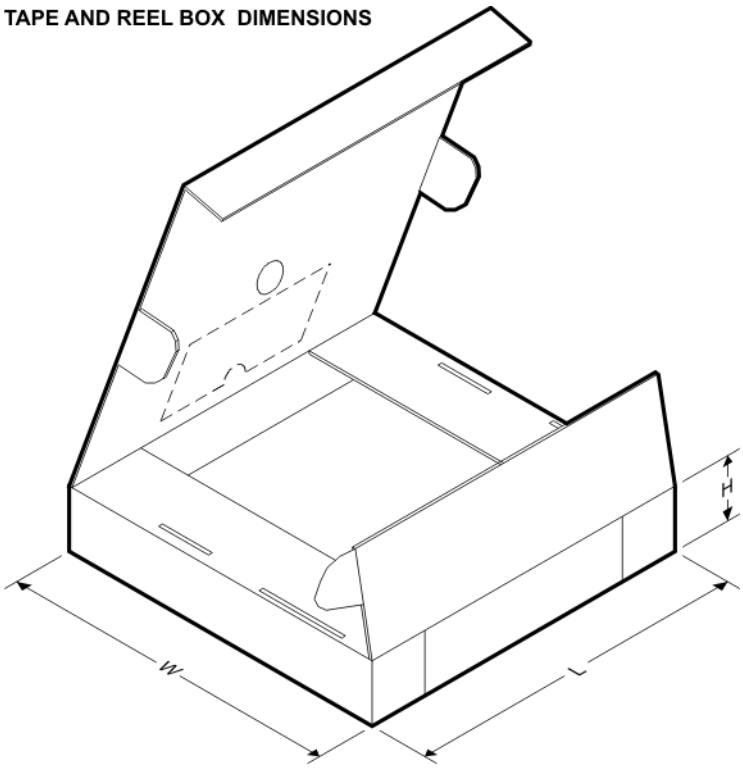

*All dimensions are nominal

Device	Package Type	Package Drawing	Pins	SPQ	Length (mm)	Width (mm)	Height (mm)
SCANSTA111MTX/NOPB	TSSOP	DGG	48	1000	367.0	367.0	45.0
SCANSTA111SMX	NFBGA	NZA	49	2000	367.0	367.0	38.0
SCANSTA111SMX/NOPB	NFBGA	NZA	49	2000	367.0	367.0	38.0

NZA0049A

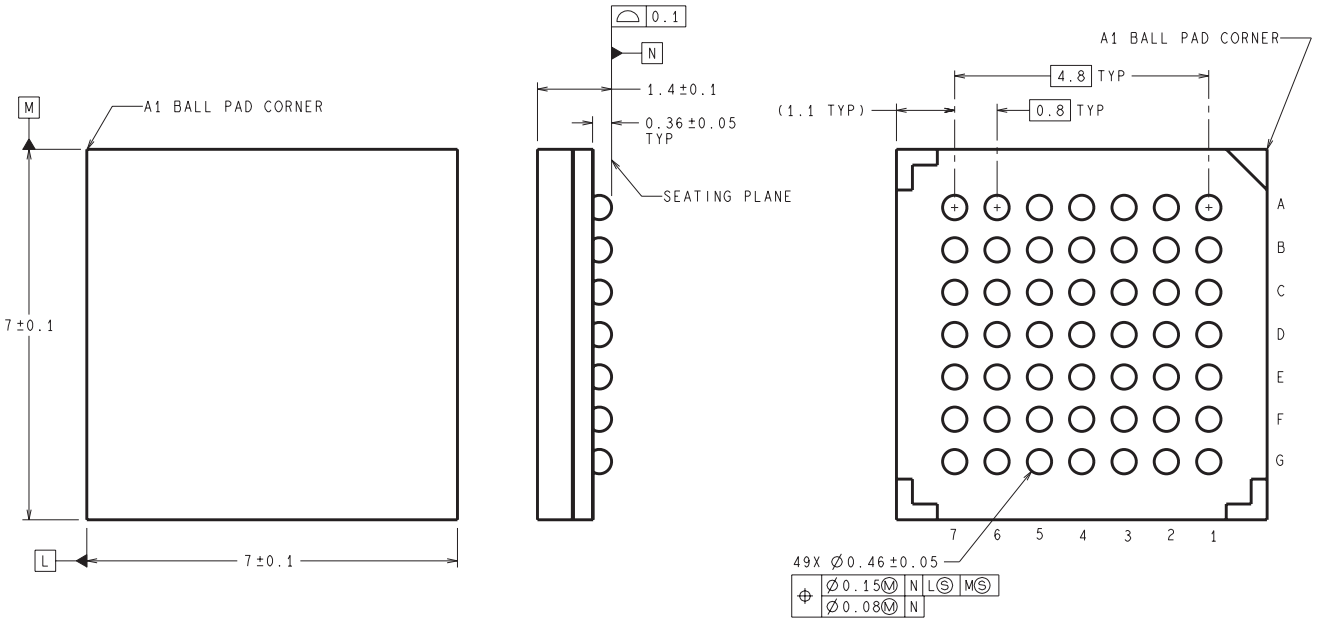

DIMENSIONS ARE IN MILLIMETERS

SLC49A (Rev B)

DGG (R-PDSO-G)** **PLASTIC SMALL-OUTLINE PACKAGE**

48 PINS SHOWN

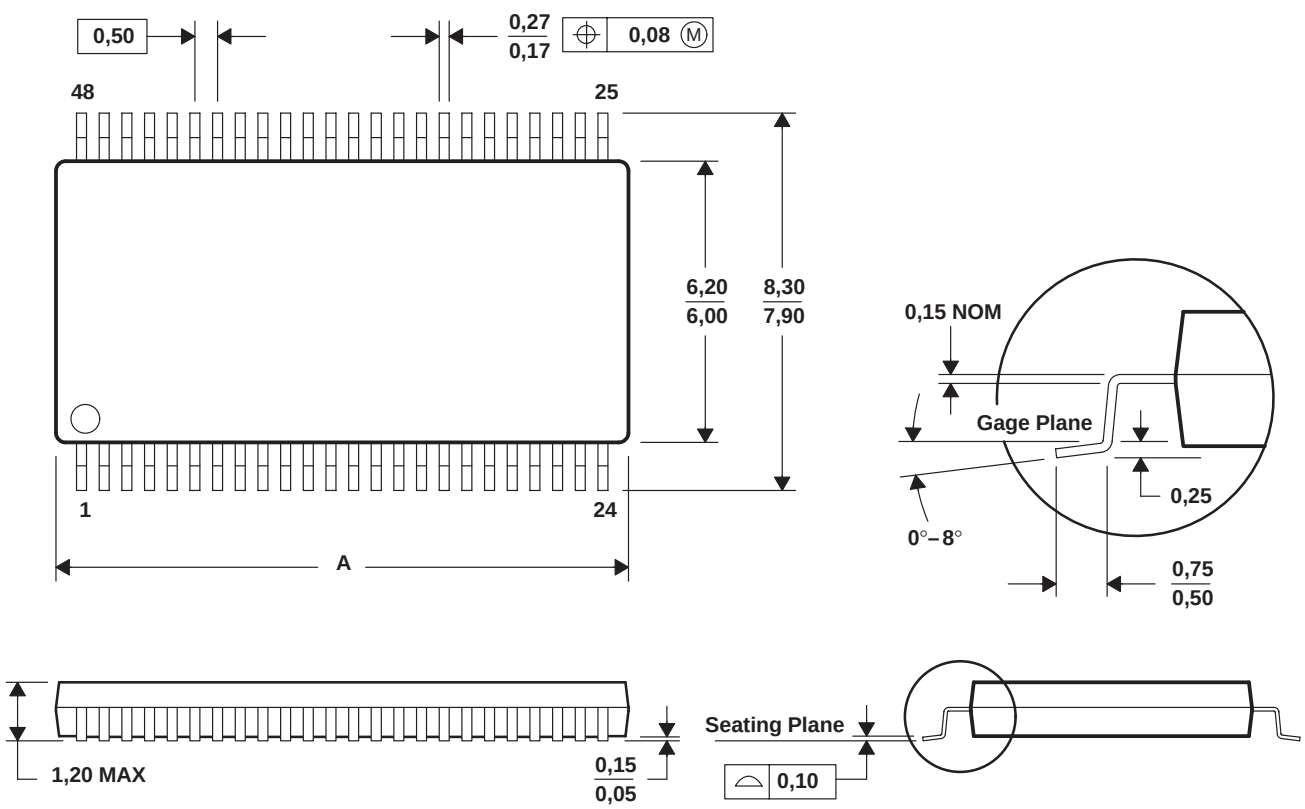

DIM \ PINS **	48	56	64
A MAX	12,60	14,10	17,10
A MIN	12,40	13,90	16,90

4040078/F 12/97

NOTES: A. All linear dimensions are in millimeters.
B. This drawing is subject to change without notice.
C. Body dimensions do not include mold protrusion not to exceed 0,15.
D. Falls within JEDEC MO-153

IMPORTANT NOTICE

Texas Instruments Incorporated and its subsidiaries (TI) reserve the right to make corrections, enhancements, improvements and other changes to its semiconductor products and services per JESD46, latest issue, and to discontinue any product or service per JESD48, latest issue. Buyers should obtain the latest relevant information before placing orders and should verify that such information is current and complete. All semiconductor products (also referred to herein as “components”) are sold subject to TI’s terms and conditions of sale supplied at the time of order acknowledgment.

TI warrants performance of its components to the specifications applicable at the time of sale, in accordance with the warranty in TI’s terms and conditions of sale of semiconductor products. Testing and other quality control techniques are used to the extent TI deems necessary to support this warranty. Except where mandated by applicable law, testing of all parameters of each component is not necessarily performed.

TI assumes no liability for applications assistance or the design of Buyers’ products. Buyers are responsible for their products and applications using TI components. To minimize the risks associated with Buyers’ products and applications, Buyers should provide adequate design and operating safeguards.

TI does not warrant or represent that any license, either express or implied, is granted under any patent right, copyright, mask work right, or other intellectual property right relating to any combination, machine, or process in which TI components or services are used. Information published by TI regarding third-party products or services does not constitute a license to use such products or services or a warranty or endorsement thereof. Use of such information may require a license from a third party under the patents or other intellectual property of the third party, or a license from TI under the patents or other intellectual property of TI.

Reproduction of significant portions of TI information in TI data books or data sheets is permissible only if reproduction is without alteration and is accompanied by all associated warranties, conditions, limitations, and notices. TI is not responsible or liable for such altered documentation. Information of third parties may be subject to additional restrictions.

Resale of TI components or services with statements different from or beyond the parameters stated by TI for that component or service voids all express and any implied warranties for the associated TI component or service and is an unfair and deceptive business practice. TI is not responsible or liable for any such statements.

Buyer acknowledges and agrees that it is solely responsible for compliance with all legal, regulatory and safety-related requirements concerning its products, and any use of TI components in its applications, notwithstanding any applications-related information or support that may be provided by TI. Buyer represents and agrees that it has all the necessary expertise to create and implement safeguards which anticipate dangerous consequences of failures, monitor failures and their consequences, lessen the likelihood of failures that might cause harm and take appropriate remedial actions. Buyer will fully indemnify TI and its representatives against any damages arising out of the use of any TI components in safety-critical applications.

In some cases, TI components may be promoted specifically to facilitate safety-related applications. With such components, TI’s goal is to help enable customers to design and create their own end-product solutions that meet applicable functional safety standards and requirements. Nonetheless, such components are subject to these terms.

No TI components are authorized for use in FDA Class III (or similar life-critical medical equipment) unless authorized officers of the parties have executed a special agreement specifically governing such use.

Only those TI components which TI has specifically designated as military grade or “enhanced plastic” are designed and intended for use in military/aerospace applications or environments. Buyer acknowledges and agrees that any military or aerospace use of TI components which have ***not*** been so designated is solely at the Buyer's risk, and that Buyer is solely responsible for compliance with all legal and regulatory requirements in connection with such use.

TI has specifically designated certain components as meeting ISO/TS16949 requirements, mainly for automotive use. In any case of use of non-designated products, TI will not be responsible for any failure to meet ISO/TS16949.

Products		**Applications**	
Audio	www.ti.com/audio	Automotive and Transportation	www.ti.com/automotive
Amplifiers	amplifier.ti.com	Communications and Telecom	www.ti.com/communications
Data Converters	dataconverter.ti.com	Computers and Peripherals	www.ti.com/computers
DLP® Products	www.dlp.com	Consumer Electronics	www.ti.com/consumer-apps
DSP	dsp.ti.com	Energy and Lighting	www.ti.com/energy
Clocks and Timers	www.ti.com/clocks	Industrial	www.ti.com/industrial
Interface	interface.ti.com	Medical	www.ti.com/medical
Logic	logic.ti.com	Security	www.ti.com/security
Power Mgmt	power.ti.com	Space, Avionics and Defense	www.ti.com/space-avionics-defense
Microcontrollers	microcontroller.ti.com	Video and Imaging	www.ti.com/video
RFID	www.ti-rfid.com		
OMAP Applications Processors	www.ti.com/omap	**TI E2E Community**	e2e.ti.com
Wireless Connectivity	www.ti.com/wirelessconnectivity		

Mailing Address: Texas Instruments, Post Office Box 655303, Dallas, Texas 75265
Copyright © 2013, Texas Instruments Incorporated