Triple 3-Input NAND Gate

High-Voltage Silicon-Gate CMOS

The SL4023B NAND gates provide the system designer with direct emplementation of the NAND function.

- Operating Voltage Range: 3.0 to 18 V
- Maximum input current of 1 µA at 18 V over full package-temperature range; 100 nA at 18 V and 25°C
- Noise margin (over full package temperature range):
  1.0 V min @ 5.0 V supply
  2.0 V min @ 10.0 V supply
  2.5 V min @ 15.0 V supply

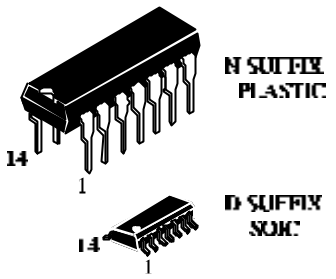

ORDERING INFORMATION
SL4023BN Plastic
SL4023BD SOIC
T_A = -55° to 125° C for all packages

LOGIC DIAGRAM

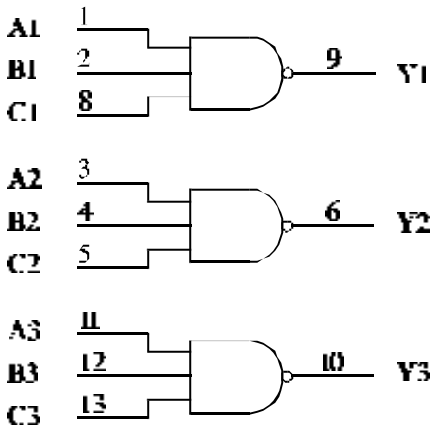

PIN 14 =V_{CC}
PIN 7 = GND

PIN ASSIGNMENT

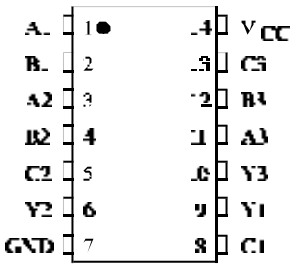

FUNCTION TABLE

Inputs			Output
A	B	C	Y
L	X	X	H
X	L	X	H
X	X	L	H
H	H	H	L

X = don’ t care

MAXIMUM RATINGS*

Symbol	Parameter	Value	Unit
V_{CC}	DC Supply Voltage (Referenced to GND)	-0.5 to +20	V
V_{IN}	DC Input Voltage (Referenced to GND)	-0.5 to V_{CC} +0.5	V
V_{OUT}	DC Output Voltage (Referenced to GND)	-0.5 to V_{CC} +0.5	V
I_{IN}	DC Input Current, per Pin	±10	mA
P_D	Power Dissipation in Still Air, Plastic DIP+ SOIC Package+	750 500	mW
P_D	Power Dissipation per Output Transistor	100	mW
Tstg	Storage Temperature	-65 to +150	°C
T_L	Lead Temperature, 1 mm from Case for 10 Seconds (Plastic DIP or SOIC Package)	260	°C

*Maximum Ratings are those values beyond which damage to the device may occur.
Functional operation should be restricted to the Recommended Operating Conditions.
+Derating - Plastic DIP: - 10 mW/°C from 65° to 125°C
SOIC Package: : - 7 mW/°C from 65° to 125°C

RECOMMENDED OPERATING CONDITIONS

Symbol	Parameter	Min	Max	Unit
V_{CC}	DC Supply Voltage (Referenced to GND)	3.0	18	V
V_{IN}, V_{OUT}	DC Input Voltage, Output Voltage (Referenced to GND)	0	V_{CC}	V
T_A	Operating Temperature, All Package Types	-55	+125	°C

This device contains protection circuitry to guard against damage due to high static voltages or electric fields. However, precautions must be taken to avoid applications of any voltage higher than maximum rated voltages to this high-impedance circuit. For proper operation, V_{IN} and V_{OUT} should be constrained to the range GND≤(V_{IN} or V_{OUT})≤V_{CC}.

Unused inputs must always be tied to an appropriate logic voltage level (e.g., either GND or V_{CC}). Unused outputs must be left open.

DC ELECTRICAL CHARACTERISTICS(Voltages Referenced to GND)

Symbol	Parameter	Test Conditions	V_{CC} V	Guaranteed Limit ≥-55°C	25 °C	≤125 °C	Unit
V_{IH}	Minimum High-Level Input Voltage	V_{OUT}=0.5 V or V_{CC} - 0.5 V V_{OUT}=1.0 V or V_{CC} - 1.0 V V_{OUT}=1.5 V or V_{CC} - 1.5 V	5.0 10 15	3.5 7 11	3.5 7 11	3.5 7 11	V
V_{IL}	Maximum Low -Level Input Voltage	V_{OUT}= V_{CC} - 0.5V V_{OUT}= V_{CC} - 1.0 V V_{OUT}= V_{CC} - 1.5V	5.0 10 15	1.5 3 4	1.5 3 4	1.5 3 4	V
V_{OH}	Minimum High-Level Output Voltage	V_{IN}=GND or V_{CC}	5.0 10 15	4.95 9.95 14.95	4.95 9.95 14.95	4.95 9.95 14.95	V
V_{OL}	Maximum Low-Level Output Voltage	V_{IN}= V_{CC}	5.0 10 15	0.05 0.05 0.05	0.05 0.05 0.05	0.05 0.05 0.05	V
I_{IN}	Maximum Input Leakage Current	V_{IN}= GND or V_{CC}	18	±0.1	±0.1	±1.0	µA
I_{CC}	Maximum Quiescent Supply Current (per Package)	V_{IN}= GND or V_{CC}	5.0 10 15 20	0.25 0.5 1.0 5.0	0.25 0.5 1.0 5.0	7.5 15 30 150	µA
I_{OL}	Minimum Output Low (Sink) Current	V_{IN}= GND or V_{CC} U_{OL}=0.4 V U_{OL}=0.5 V U_{OL}=1.5 V	 5.0 10 15	 0.64 1.6 4.2	 0.51 1.3 3.4	 0.36 0.9 2.4	mA
I_{OH}	Minimum Output High (Source) Current	V_{IN}= GND or V_{CC} U_{OH}=2.5 V U_{OH}=4.6 V U_{OH}=9.5 V U_{OH}=13.5 V	 5.0 5.0 10 15	 -2.0 -0.64 -1.6 -4.2	 -1.6 -0.51 -1.3 -3.4	 -1.15 -0.36 -0.9 -2.4	mA

AC ELECTRICAL CHARACTERISTICS(C_L=50pF, R_L=200kΩ, Input t_r=t_f=20 ns)

Symbol	Parameter	V_{CC} V	Guaranteed Limit ≥-55°C	25°C	≤125°C	Unit
t_{PLH}, t_{PHL}	Maximum Propagation Delay, Input A, B or C to Output Y (Figure 1)	5.0 10 15	250 120 90	250 120 90	500 240 180	ns
t_{TLH}, t_{THL}	Maximum Output Transition Time, Any Output (Figure 1)	5.0 10 15	200 100 80	200 100 80	400 200 160	ns
C_{IN}	Maximum Input Capacitance	-		7.5		pF

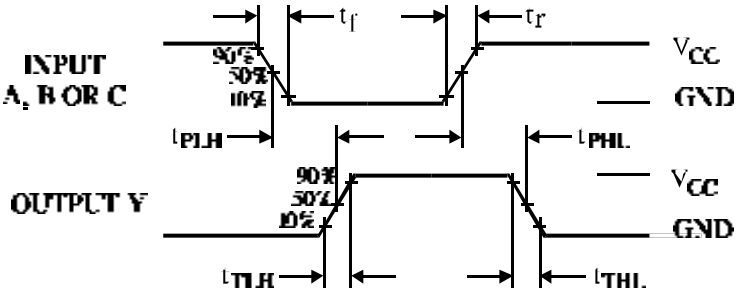

Figure 1. Switching Waveforms
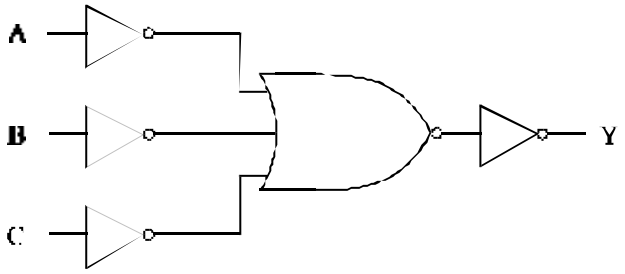
EXPANDED LOGIC DIAGRAM
(1/3 of the Device)