A product Line of
Diodes Incorporated

PI49FCT3805/PI49FCT3806

3.3V Fast CMOS Buffer/Clock Driver

Features

- 3.3V version of PI49FCT805/806
- Extremely low output skew: 0.5ns
- Monitor output pin
- Clock busing with 3-state control
- TTL input and CMOS output compatible
- Industrial operation at –40°C to 85°C
- Extremely low static power (1mW, typ.)
- Hysteresis on all inputs
- Totally Lead-Free & Fully RoHS Compliant (Notes 1 & 2)
- Halogen and Antimony Free. "Green" Device (Note 3)
- For automotive applications requiring specific change control (i.e. parts qualified to AEC-Q100/101/200, PPAP capable, and manufactured in IATF 16949 certified facilities), please contact us or your local Diodes representative. https://www.diodes.com/quality/product-definitions/
- Packaging (Pb-free & Green available):
  - 20-pin 150-mil wide QSOP (Q)
  - 20-pin 209-mil wide SSOP (H)

Description

Diodes' PI49FCT3805 is a 3.3V non-inverting clock driver and the PI49FCT3806 is a 3.3V inverting clock driver designed with two independent groups of buffers. These buffers have 3-state Output Enable inputs (active LOW) with a 1-in, 5-out configuration per group. Each clock driver consist of two banks of drivers, driving five outputs each from a standard TTL compatible CMOS input.

PI49FCT3805 Block Diagram

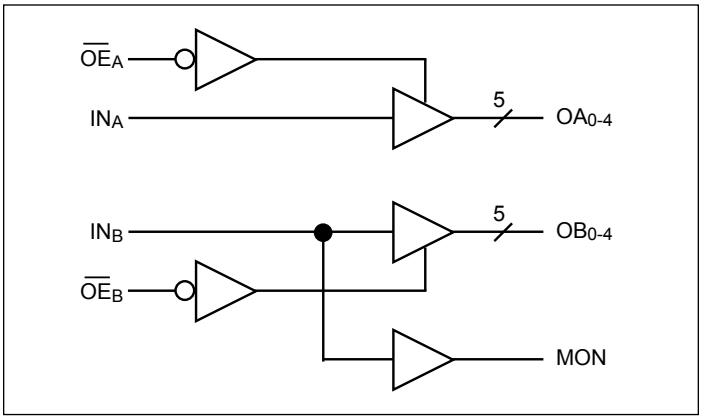

PI49FCT3806 Block Diagram

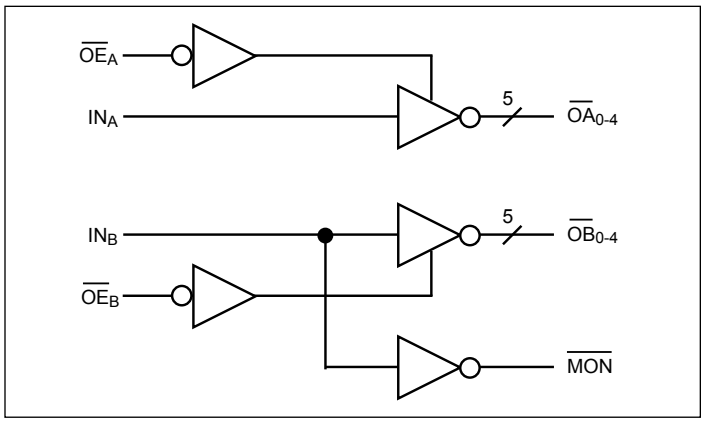

Notes:

1. No purposely added lead. Fully EU Directive 2002/95/EC (RoHS), 2011/65/EU (RoHS 2) & 2015/863/EU (RoHS 3) compliant.
2. See https://www.diodes.com/quality/lead-free/ for more information about Diodes Incorporated's definitions of Halogen- and Antimony-free, "Green" and Lead-free.
3. Halogen- and Antimony-free "Green" products are defined as those which contain <900ppm bromine, <900ppm chlorine (<1500ppm total Br + Cl) and <1000ppm antimony compounds.

® Diodes Incorporated

PI49FCT3805 Pin Configuration

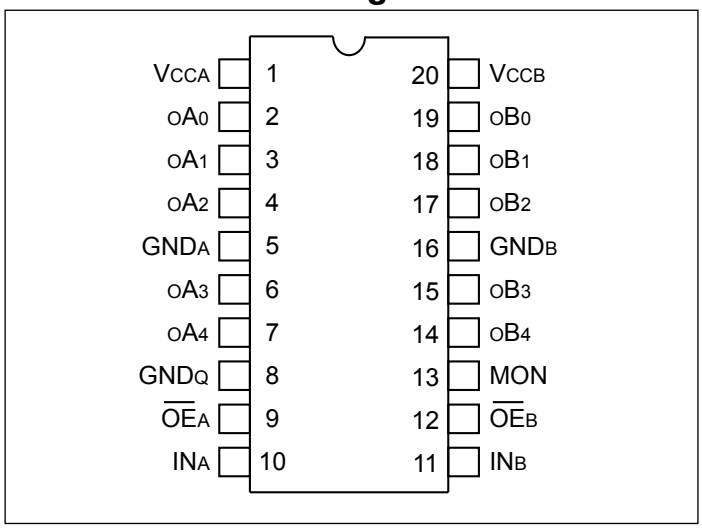

PI49FCT3806 Pin Configuration

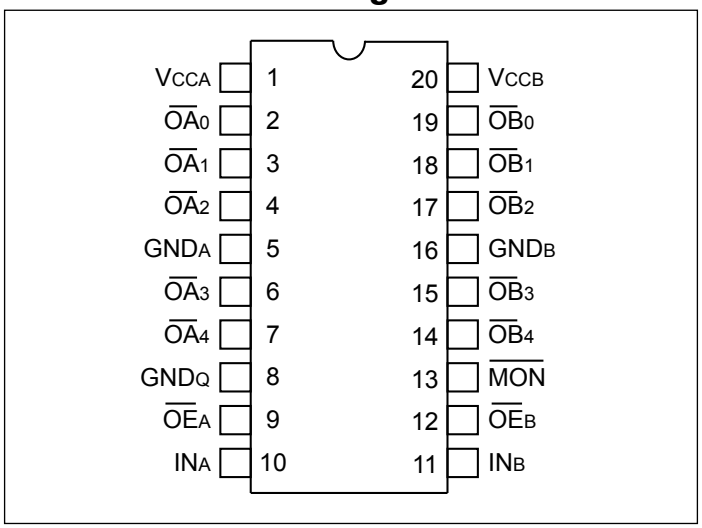

Pin Description

Pin Name	Description
$\overline{OE}_A$, $\overline{OE}_B$	3-State Output Enable Inputs (Active LOW)
IN_A, IN_B	Clock Inputs
OA_N, OB_N	Clock Outputs
MON	Monitor Output
GND	Ground
V_{CC}	Power

PI49FCT3805 Truth Table(1)

Inputs		Outputs	
$\overline{OE}_A$, $\overline{OE}_B$	IN_A, IN_B	OA_N, OB_N	MON
L	L	L	L
L	H	H	H
H	L	Z	L
H	H	Z	H

Note:

1. H = High Voltage Level, L = Low Voltage Level
   Z = High Impedance

PI49FCT3806 Truth Table(1)

Inputs		Outputs	
$\overline{OE}_A$, $\overline{OE}_B$	IN_A, IN_B	$\overline{OA}_N$, $\overline{OB}_N$	$\overline{MON}$
L	L	H	H
L	H	L	L
H	L	Z	H
H	H	Z	L

Note:

1. H = High Voltage Level, L = Low Voltage Level, Z = High Impedance

® Diodes Incorporated

Maximum Ratings

(Above which the useful life may be impaired. For user guidelines, not tested.)

Storage Temperature.....–65°C to +150°C
Ambient Temperature with Power Applied..... –40°C to +85°C
Supply Voltage to Ground Potential (Inputs & Vcc Only)....–0.5V to +7.0V
Supply Voltage to Ground Potential (Outputs & I/O Only) .–0.5V to +7.0V
DC Input Voltage .....–0.5V to +7.0V
DC Output Current ..... 120 mA
Power Dissipation 0.5W

Note:

Stresses greater than those listed under MAXIMUM RATINGS may cause permanent damage to the device. This is a stress rating only and functional operation of the device at these or any other conditions above those indicated in the operational sections of this specification is not implied. Exposure to absolute maximum rating conditions for extended periods may affect reliability.

DC Electrical Characteristics (T_A = –40°C to +85°C, V_{CC} = 3.3V ±0.3V)

Symbol	Parameter	Test Condition[1]		Min.	Typ.	Max.	Units
V_{OH}	Output High Voltage V_{CC} = 3.0V, V_{IN} = V_{IL} or V_{IH}	V_{CC} = Min., V_{IN} = V_{IH} or V_{IL}	I_{OH} = -0.1mA I_{OH} = -8mA	V_{CC} -0.2 2.4 (3)	- 3.0		V
V_{OL}	Output Low Voltage V_{CC} = 3.0V, V_{IN} = V_{IL} or V_{IH}	V_{CC} = Min., V_{IN} = V_{IH} or V_{IL}	I_{OL} = 0.1mA I_{OL} = 16mA I_{OL} = 24mA		- 0.2 0.3	0.2 0.4 0.5	V
V_{IH}	Input High Voltage	Guaranteed Logic HIGH level	Input Pins	2.0		5.5	V
V_{IL}	Input Low Voltage	Guaranteed Logic LOW level	Input Pins	-0.5		0.8	V
I_{IH}	Input High Current	V_{CC} = Max	V_{IN} = V_{CC} (Input Pins)	-1		1	µA
I_{IL}	Input Low Current	V_{CC} = Max	V_{IN} = GND (Input & I/O Pins)	-1		1	µA
I_{OZH}	High Impedance Output Current	V_{CC} = Max., All outputs Disabled	V_{OUT} = V_{CC} V_{OUT} = GND	-1		1	µA
I_{OZL}	High Impedance Output Current	V_{CC} = Max., All outputs Disabled	V_{OUT} = V_{CC} V_{OUT} = GND	-1		1	µA
V_{IK}	Clamp Diode Voltage	V_{CC} = Min., I_{IN} = -18mA			-0.7	-1.2	V
I_{ODH}	Output HIGH Current	V_{OUT} = 3.3V, V_{IN} =V_{IL} or V_{IH}, V_{OUT} = 1.5V[4]		-35	-86	-110	mA
I_{ODL}	Output LOW Current	V_{OUT} = 3.3V, V_{IN} = V_{IL} or V_{IH}, V_{OUT} = 1.5V[4]		50	168	200	mA
I_{OS}	Short Circuit[5] Current	V_{CC} = Max., V_{OUT} = GND[5]		-60	-135	-240	mA
V_H	Input Hysteresis				150		mV

Note:
1. For Max. or Min. conditions, use appropriate value specified under Electrical Characteristics for the applicable device type.
2. Typical values are at V_{CC} = 3.3V, +25°C ambient and maximum loading.
3. V_{OH} = V_{CC} – 0.6V at rated current.
4. This parameter is determined by device characterization but is not production tested.
5. Not more than one output should be shorted at one time. Duration of the test should not exceed one second.

Power Supply Characteristics (T_A = –40°C to +85°C, V_{CC} = 3.3V ±0.3V)

Parameters	Description	Test Conditions[1]		Min.	Typ[2]	Max.	Units
I_{CC}	Quiescent Power Supply Current	V_{CC} = Max.	V_{IN} = GND or V_{CC}	—		30	µA
ΔI_{CC}	Supply Current per Inputs @ TTL HIGH	V_{CC} = Max.	V_{IN} = V_{CC} – 0.6V[3]	—	11	300	
I_{CCD}	Supply Current per Input per MHz[4]	V_{CC} = Max., Outputs Open $\overline{OE}_A$ or $\overline{OE}_B$ = GND Per Output Toggling 50% Duty Cycle	V_{IN} = V_{CC} V_{IN} = GND	—	0.1	0.16	mA/ MHz
I_C	Total Power Supply Current[6]	V_{CC} = Max., Outputs Open FO = 10 MHz 50% Duty Cycle $\overline{OE}_A$ or $\overline{OE}_B$ = GND Mon. Outputs Toggling	V_{IN} = V_{CC} V_{IN} = GND	—	3.3	9.0[5]	mA
			V_{IN} = V_{CC} – 0.6V V_{IN} = GND	—	3.3	10.0[5]	
		V_{CC} = Max., Outputs Open f_O = 2.5 MHz 50% Duty Cycle $\overline{OE}_A$ or $\overline{OE}_B$ = GND Eleven Outputs Toggling	V_{IN} = V_{CC} V_{IN} = GND	—	1.8	6.0[5]	
			V_{IN} = V_{CC} – 0.6V V_{IN} = GND	—	1.8	7.0[5]	

Note:
1. For Max. or Min. conditions, use appropriate value specified under Electrical Characteristics for the applicable device.
2. Typical values are at V_{CC} = 3.3V, +25°C ambient.
3. Per TTL driven input (V_{IN} = V_{CC} – 0.6V); all other inputs at V_{CC} or GND.
4. This parameter is not directly testable, but is derived for use in Total Power Supply Calculations.
5. Values for these conditions are examples of the I_C formula. These limits are guaranteed but not tested.
6. $I_C = I_{QUIESCENT} + I_{INPUTS} + I_{DYNAMIC}$
   $I_C = I_{CC} + \Delta I_{CC} D_H N_T + I_{CCD} (f_O N_O)$
   I_{CC} = Quiescent Current
   ΔI_{CC} = Power Supply Current for a TTL High Input (V_{IN} = V_{CC} – 0.6V)
   D_H = Duty Cycle for TTL Inputs High
   N_T = Number of TTL Inputs at D_H
   I_{CCD} = Dynamic Current Caused by an Input Transition Pair (HLH or LHL)
   f_O = Output Frequency
   N_O = Number of Outputs at f_O

All currents are in milliamps and all frequencies are in megahertz.

Capacitance (T_A = 25°C, f = 1 MHz)

Parameters[1]	Description	Test Conditions	Typ	Max.	Units
C_{IN}	Input Capacitance	V_{IN} = 0V	3.0	6.0	pF
C_{OUT}	Output Capacitance	V_{OUT} = 0V	6.0	8.0	

Note:
1. This parameter is determined by device characterization but is not production tested.

Switching Characteristics (T_A = −40°C to +85°C, V_{CC} = 3.3V ±0.3V)

Parameter	Description	Test Conditions[1]	3805 3806 Com.		3805A 3806A Com.		3805B 3806B Com.		3805C 3806C Com.		Units
			Min.	Max.	Min.	Max.	Min.	Max.	Min.	Max.	
t_{PLH} t_{PLH}	Propagation Delay IN_A to OA_N, IN_B to OB_N	C_L = 50pF R_L = 500Ω	1.5	6.5	1.5	5.8	1.5	5.0	1.5	4.5	ns
t_{PZH} t_{PZL}	Output Enable Time $\overline{OE}_A$ to OA_N, $\overline{OE}_B$ to OB_N		1.5	8.0	1.5	8.0	1.5	6.5	1.5	6.2	
t_{PHL} t_{PLZ}	Output Disable Time $\overline{OE}_A$ to OA_N, $\overline{OE}_B$ to OB_N		1.5	7.0	1.5	7.0	1.5	6.0	1.5	5.0	
$t_{SK(o)}$[3]	Skew between two outputs of same package (same transition)			0.7		0.7		0.5		0.5	
$t_{SK(P)}$[3]	Skew between opposite transitions (t_{PHL} - t_{PLH}) of the same output			1.0		0.7		0.5		0.5	
$t_{SK(t)}$[3]	Skew between two outputs of different package at same temperature (Same transition)			1.5		1.2		1.0		0.8	

Note:
1. See test circuit and waveforms
2. Minimum limits are guaranteed but not tested on Propagation Delays.
3. Skew measured at worst cast temperature (max. temp).

Tests Circuits for All Outputs

Except for F_{IN} >100 MHz

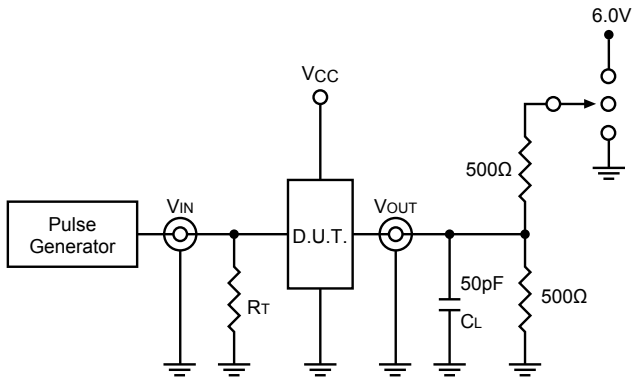

Switch Position

Test	Switch
Disable LOW Enable LOW	6V
Disable HIGH Enable HIGH	GND
All Other Inputs	Open

Definitions:

C_L = Load capacitance: includes jig and probe capacitance.

R_T = Termination resistance: should be equal to ZOUT of the Pulse Generator.

Switching Waveforms

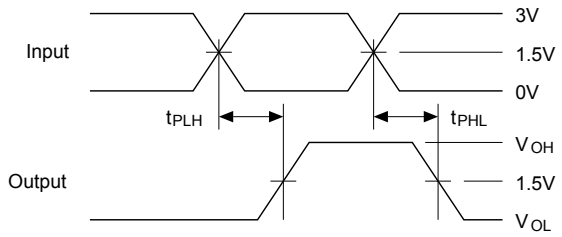

Propagation Delay

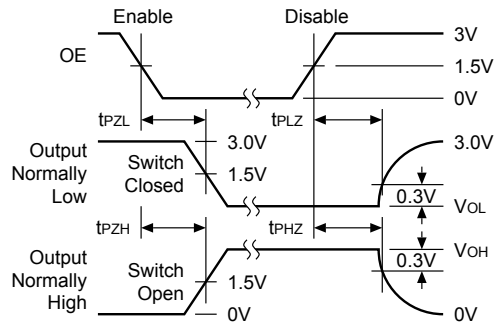

Enable and Disable Times

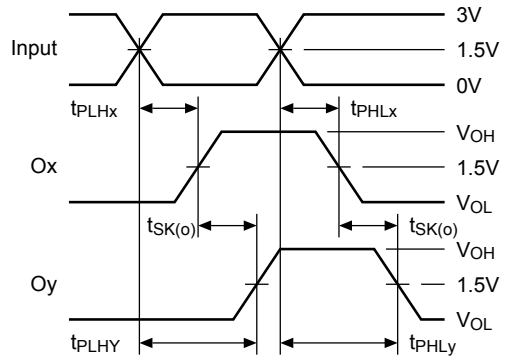

$t_{SK(o)} = | t_{PLHy} - t_{PLHx} |$ or $| t_{PHLy} - t_{PHLx} |$

Output Skew – $t_{SK(O)}$

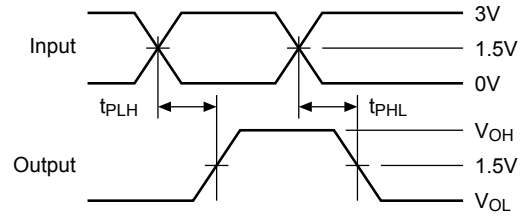

$t_{SK(p)} = | t_{PHL} - t_{PLH} |$

Pulse Skew – $t_{SK(P)}$

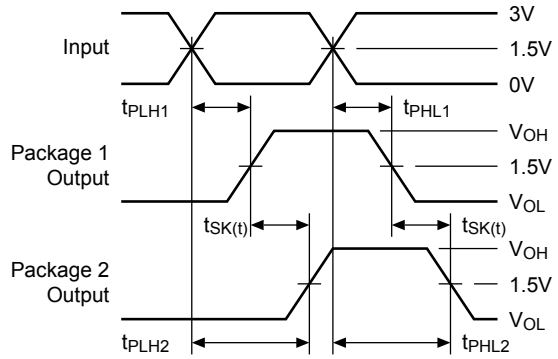

$t_{SK(t)} = | t_{PLH2} - t_{PLH1} |$ or $| t_{PHL2} - t_{PHL1} |$

Package Skew – $t_{SK(t)}$

Part Marking

PI49FCT3805
Q Package

B on the Part# = Speed Code
B: Fab 2 Port Code
W: Die Rev
YY: Year
WW: Workweek
1st X: Assembly Code
2nd X: Fab Code

C on the Part# = Speed Code
B: Fab 2 Port Code
W: Die Rev
YY: Year
WW: Workweek
1st X: Assembly Code
2nd X: Fab Code

B: Fab 2 Port Code
W: Die Rev
YY: Year
WW: Workweek
1st X: Assembly Code
2nd X: Fab Code

H Package

C on the Part# = Speed Code
B: Fab 2 Port Code
W: Die Rev
YY: Year
WW: Workweek
1st X: Assembly Code
2nd X: Fab Code

Part Marking

PI49FCT3806

Top mark not available at this time. To obtain advance information regarding the top mark, please contact your local sales representative.

® Diodes Incorporated

Packaging Mechanical: 20-SSOP (H20)

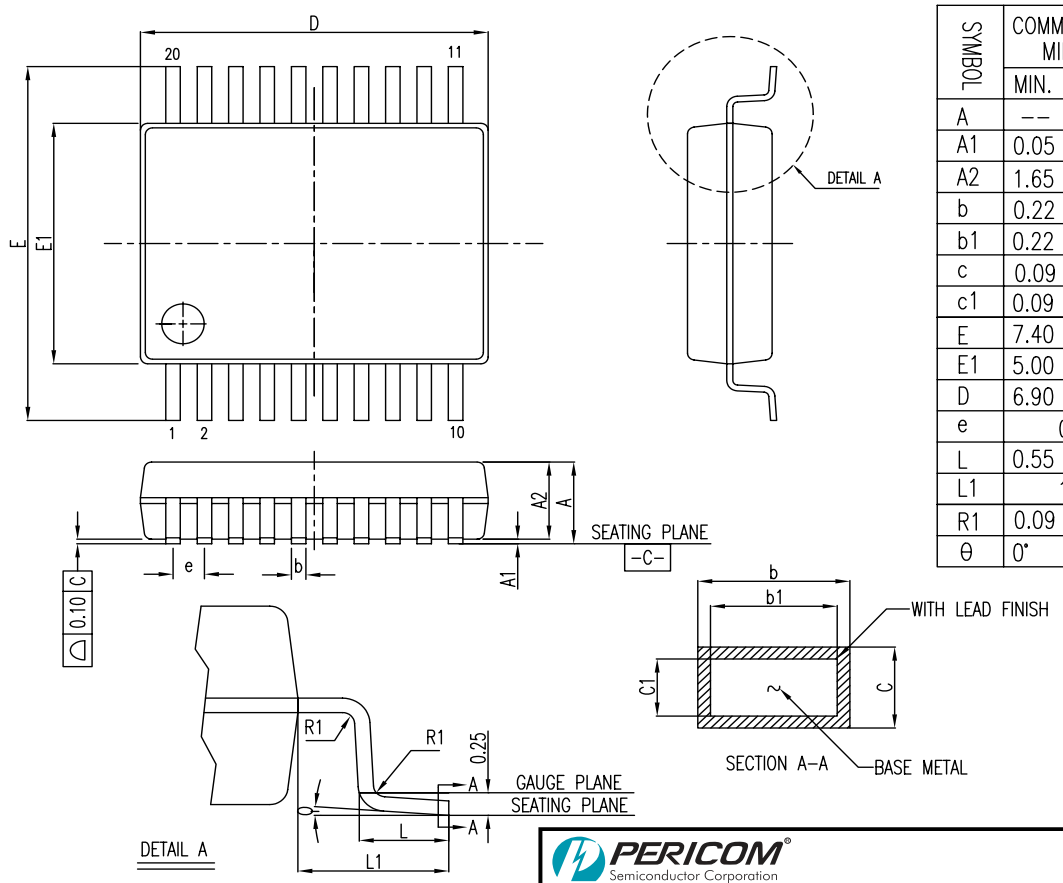

SYMBOL	COMMON DIMENSION MILLIMETERS		
	MIN.	NOM.	MAX.
A	--	--	2.0
A1	0.05	--	--
A2	1.65	1.75	1.85
b	0.22	--	0.38
b1	0.22	0.30	0.33
c	0.09	--	0.25
c1	0.09	0.15	0.21
E	7.40	7.80	8.20
E1	5.00	5.30	5.60
D	6.90	7.20	7.50
e	0.65 BSC		
L	0.55	0.75	0.95
L1	1.25 REF.		
R1	0.09	--	--
θ	0°	4°	8°

NOTE:
1. Controlling dimensions in millimeters
2. Ref.: JEDEC MO-150B/AE
3. Package Outline Exclusive of Mold Flash and Metal Burr

PERICOM Semiconductor Corporation

DATE: 10/31/13

DESCRIPTION: 20-Pin, 209-Mil Wide, SSOP

PACKAGE CODE: H20

DOCUMENT CONTROL #: PD-1240 REVISION: F

13-0214

Packaging Mechanical: 20-QSOP (Q)

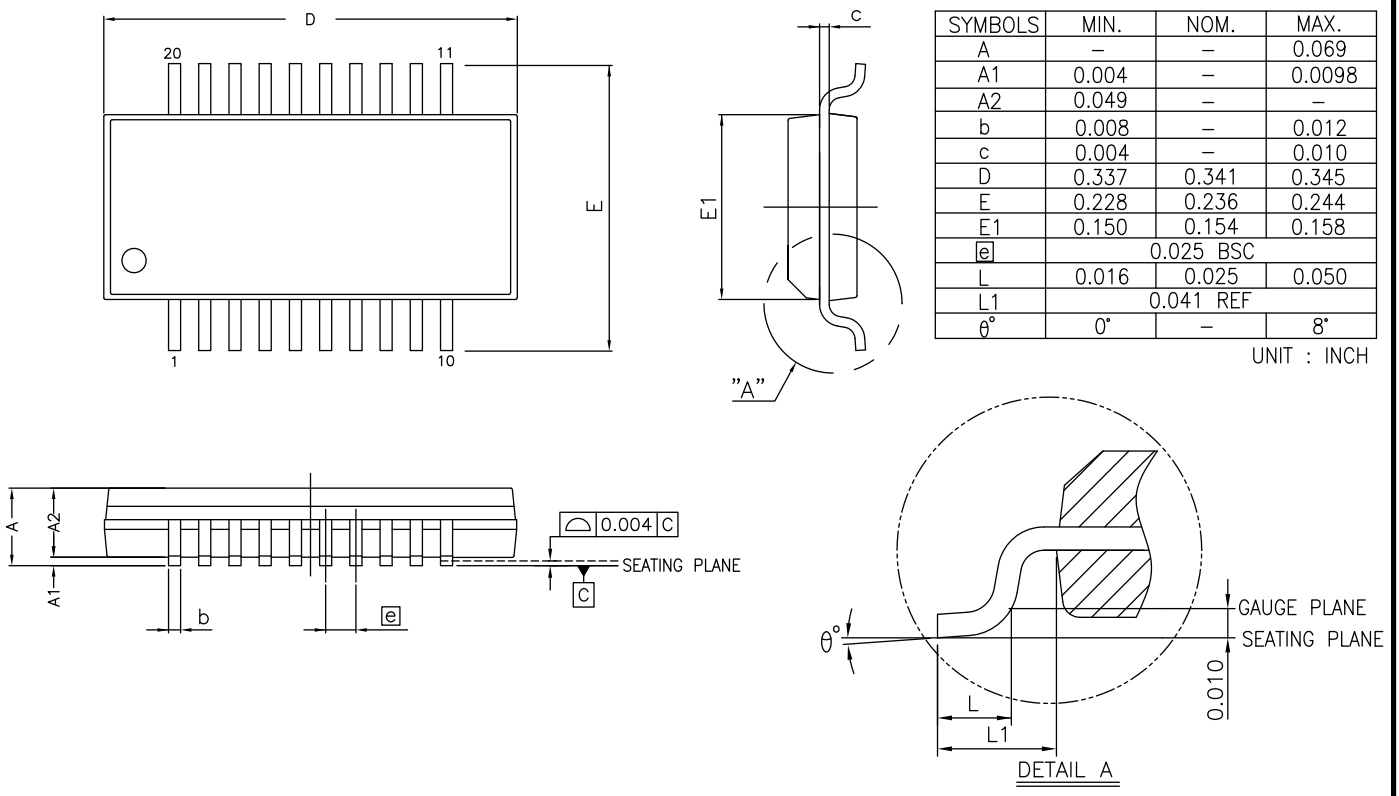

SYMBOLS	MIN.	NOM.	MAX.
A	–	–	0.069
A1	0.004	–	0.0098
A2	0.049	–	–
b	0.008	–	0.012
c	0.004	–	0.010
D	0.337	0.341	0.345
E	0.228	0.236	0.244
E1	0.150	0.154	0.158
e	0.025 BSC		
L	0.016	0.025	0.050
L1	0.041 REF		
θ°	0°	–	8°

UNIT : INCH

NOTES:
1. ALL DIMENSIONS IN INCH. ANGLES IN DEGREES.
2. JEDEC MO–137E
3. DIMENSIONS DOES NOT INCLUDE MOLD FLASH, PROTRUSIONS OR GATE BURRS.

16-0057

PERICOM Enabling Serial Connectivity

DATE: 03/24/16

DESCRIPTION: 20-Pin, 150mil Wide QSOP

PACKAGE CODE: Q (Q20)

DOCUMENT CONTROL #: PD-1202 REVISION: I

For latest package info.

please check: http://www.diodes.com/design/support/packaging/pericom-packaging/packaging-mechanicals-and-thermal-characteristics/

PI49FCT3805 Ordering Information

Ordering Code	Package Code	Speed Grade	Package Description
PI49FCT3805BQEX	Q	B	20-pin, 150-mil (QSOP)
PI49FCT3805CHEX	H	C	20-pin, 209-mil (SSOP)
PI49FCT3805CQEX	Q	C	20-pin, 150-mil (QSOP)
PI49FCT3805QEX	Q	Blank	20-pin, 150-mil (QSOP)

PI49FCT3806 Ordering Information

Ordering Code	Package Code	Speed Grade	Package Description
PI49FCT3806BQEX	Q	B	20-pin, 150-mil (QSOP)

Notes:

1. No purposely added lead. Fully EU Directive 2002/95/EC (RoHS), 2011/65/EU (RoHS 2) & 2015/863/EU (RoHS 3) compliant.
2. See https://www.diodes.com/quality/lead-free/ for more information about Diodes Incorporated's definitions of Halogen- and Antimony-free, "Green" and Lead-free.
3. Halogen- and Antimony-free "Green" products are defined as those which contain <900ppm bromine, <900ppm chlorine (<1500ppm total Br + Cl) and <1000ppm antimony compounds.
4. E = Pb-free and Green
5. X suffix = Tape/Reel

® Diodes Incorporated

IMPORTANT NOTICE

DIODES INCORPORATED MAKES NO WARRANTY OF ANY KIND, EXPRESS OR IMPLIED, WITH REGARDS TO THIS DOCUMENT, INCLUDING, BUT NOT LIMITED TO, THE IMPLIED WARRANTIES OF MERCHANTABILITY AND FITNESS FOR A PARTICULAR PURPOSE (AND THEIR EQUIVALENTS UNDER THE LAWS OF ANY JURISDICTION).

Diodes Incorporated and its subsidiaries reserve the right to make modifications, enhancements, improvements, corrections or other changes without further notice to this document and any product described herein. Diodes Incorporated does not assume any liability arising out of the application or use of this document or any product described herein; neither does Diodes Incorporated convey any license under its patent or trademark rights, nor the rights of others. Any Customer or user of this document or products described herein in such applications shall assume all risks of such use and will agree to hold Diodes Incorporated and all the companies whose products are represented on Diodes Incorporated website, harmless against all damages.

Diodes Incorporated does not warrant or accept any liability whatsoever in respect of any products purchased through unauthorized sales channel.

Should Customers purchase or use Diodes Incorporated products for any unintended or unauthorized application, Customers shall indemnify and hold Diodes Incorporated and its representatives harmless against all claims, damages, expenses, and attorney fees arising out of, directly or indirectly, any claim of personal injury or death associated with such unintended or unauthorized application.

Products described herein may be covered by one or more United States, international or foreign patents pending. Product names and markings noted herein may also be covered by one or more United States, international or foreign trademarks.

This document is written in English but may be translated into multiple languages for reference. Only the English version of this document is the final and determinative format released by Diodes Incorporated.

LIFE SUPPORT

Diodes Incorporated products are specifically not authorized for use as critical components in life support devices or systems without the express written approval of the Chief Executive Officer of Diodes Incorporated. As used herein:

A. Life support devices or systems are devices or systems which:

1. are intended to implant into the body, or

2. support or sustain life and whose failure to perform when properly used in accordance with instructions for use provided in the labeling can be reasonably expected to result in significant injury to the user.

B. A critical component is any component in a life support device or system whose failure to perform can be reasonably expected to cause the failure of the life support device or to affect its safety or effectiveness.

Customers represent that they have all necessary expertise in the safety and regulatory ramifications of their life support devices or systems, and acknowledge and agree that they are solely responsible for all legal, regulatory and safety-related requirements concerning their products and any use of Diodes Incorporated products in such safety-critical, life support devices or systems, notwithstanding any devices- or systems-related information or support that may be provided by Diodes Incorporated. Further, Customers must fully indemnify Diodes Incorporated and its representatives against any damages arising out of the use of Diodes Incorporated products in such safety-critical, life support devices or systems.

Copyright © 2020, Diodes Incorporated

www.diodes.com