5W4HCA-H20

Super Bright White LED

Features

high intensity LED lamp
5 mm round epoxy package
UV resistant epoxy for outdoor use

Applications

indicators
illumination

Package Dimensions

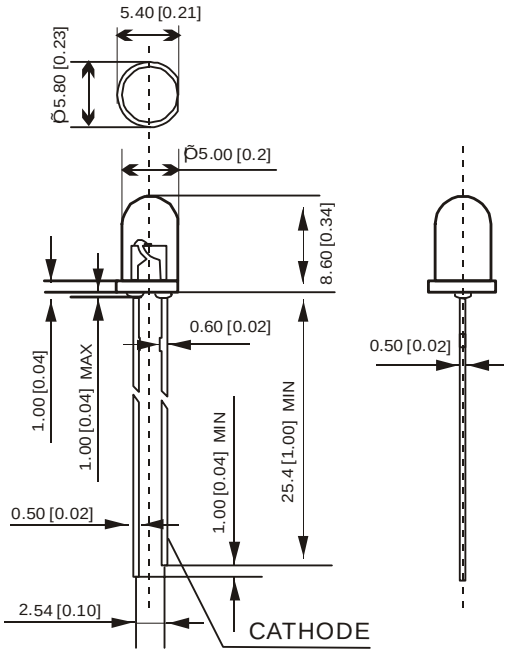

Unit: mm[inches]
Tolerance: À 0.25mm0.01]

Absolute Maximum Ratings (Ta = 25 °C)

Parameter	Symbol	Max	Unit
Power Dissipation	P_D	100	mW
Peak Forward Current *)	I_{FP}	80	mA
Continuous Forward Current	I_F	**30**	mA
Reverse Voltage	V_R	5	V
Operating Temperature Range	Topr	-30 to +80 °C	
Storage Temperature Range	Tstg	Tstg -40 °C to +100 °C	
Lead Soldering Temperature **)	Tsol	260	°C

*) Duty cycle max. 1/10, Pulse Width max. 0.1 ms

**) At the position of 4 mm from the bottom of the package within 5 seconds

Electrical Optical Characteristics (Ta = 25 °C @ If = 20 mA)

Part No.	Material	Lens	Emitting Color	Forward Voltage (V)		Luminous Intensity (mcd)		Chromaticity Coordinate (x/y)	Viewing Angle (2θ1/2)
				Typ	Max	Min	Max		
5W4HCA-H20	InGaN	Water Clear	White	3.2	3.6	19000	25000	0.32/0.30	20

Caution in ESD

1.Static electricity and surge damages the LEDs. It is recommended to use a wrist band or anti-electrostatic glove when handling the LEDs. All devices and equipment and machinery must be properly grounded.

2.When inspecting own final products on which LEDs were mounted, It is easy to find static-damaged LEDs by light emission test at lower current (below 1 mA is recommended) .

3.Damaged LEDs will show some unusual characteristics such as leak current remarkably increases, starting forward voltage becomes lower, or the LEDs get unlighted at the low current.