Ultra Low Power, Rail-to-Rail Output, Fully-Differential Amplifier

Check for Samples: THS4532

FEATURES

- **Ultra Low Power:**
  - **Voltage: 2.5 V to 5.5 V**
  - **Current: 250 µA**
  - **Power-Down Mode: 0.5 µA (typ)**
- **Fully-Differential Architecture**
- **Bandwidth: 36 MHz**
- **Slew Rate: 200 V/µs**
- **THD: –120 dBc at 1 kHz (1 V_{RMS}, R_L= 2 kΩ)**
- **Input Voltage Noise: 10 nV/√Hz (f = 1 kHz)**
- **High DC Accuracy:**
  - **V_{OS}: ±100 µV**
  - **V_{OS} Drift: ±3 µV/˚C (–40°C to +125°C)**
  - **A_{OL}: 114 dB**
- **Rail-to-Rail Output (RRO)**
- **Negative Rail Input (NRI)**
- **Output Common-Mode Control**

APPLICATIONS

- **Low-Power SAR, ΔΣ ADC Driver**
- **Low Power, High Performance:**
  - **Differential to Differential Amplifier**
  - **Single-Ended to Differential Amplifier**
- **Low-Power, Wide-Bandwidth Differential Driver**
- **Low-Power, Wide-Bandwidth Differential Signal Conditioning**
- **High Channel Count and Power Dense Systems**

DESCRIPTION

The THS4532 is a low-power, fully-differential op amp with input common-mode range below the negative rail and rail-to-rail output. The device is designed for low-power data acquisition systems and high density applications where power consumption and dissipation is critical.

The device features accurate output common-mode control that allows for dc coupling when driving analog-to-digital converters (ADCs). This control, coupled with the input common-mode range below the negative rail and rail-to-rail output, allows for easy interface from single-ended ground-referenced signal sources to successive-approximation registers (SARs), and delta-sigma (ΔΣ) ADCs using only single-supply 2.5-V to 5-V power. The THS4532 is also a valuable tool for general-purpose, low-power differential signal conditioning applications.

The device is characterized for operation over the extended industrial temperature range from –40°C to +125°C. The following package options are available:

- 8-pin SOIC (MSOP) and VSSOP (D and DGK)
- 10-pin WQFN (RUN)

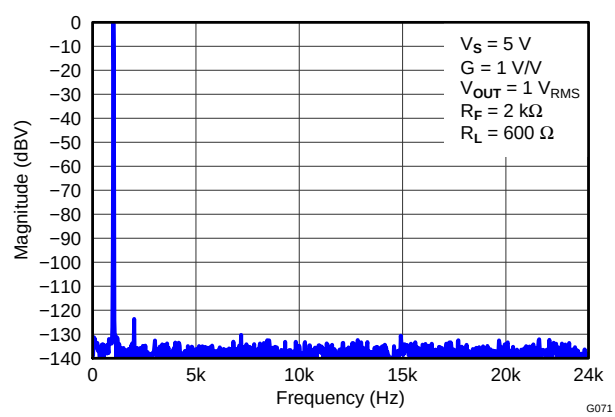

Figure 1. 1-kHz FFT Plot on Audio Analyzer

Table 1. Related Products

DEVICE	BW (MHz)	I_Q (mA)	THD (dBc) at 100 kHz	V_N (nV/√Hz)	RAIL-TO-RAIL
THS4521	145	1.14	–120	4.6	Out
THS4520	570	15.3	–114	2	Out
THS4121	100	16	–79	5.4	In/Out
THS4131	150	16	–107	1.3	No

Please be aware that an important notice concerning availability, standard warranty, and use in critical applications of Texas Instruments semiconductor products and disclaimers thereto appears at the end of this data sheet.

PRODUCTION DATA information is current as of publication date. Products conform to specifications per the terms of the Texas Instruments standard warranty. Production processing does not necessarily include testing of all parameters.

Copyright © 2013, Texas Instruments Incorporated

This integrated circuit can be damaged by ESD. Texas Instruments recommends that all integrated circuits be handled with appropriate precautions. Failure to observe proper handling and installation procedures can cause damage.

ESD damage can range from subtle performance degradation to complete device failure. Precision integrated circuits may be more susceptible to damage because very small parametric changes could cause the device not to meet its published specifications.

PACKAGING/ORDERING INFORMATION(1)

PRODUCT	CHANNEL COUNT	PACKAGE-LEAD	PACKAGE DESIGNATOR	SPECIFIED TEMPERATURE RANGE	PACKAGE MARKING	ORDERING NUMBER	TRANSPORT MEDIA, QUANTITY
THS4532	2	TSSOP-16	PW	–40°C to +125°C	THS4532	THS4532IPWT	Rails, 90
	2				THS4532	THS4532IPWR	Tape and reel, 2000

(1) For the most current package and ordering information, see the Package Option Addendum at the end of this document, or see the TI web site at www.ti.com.

ABSOLUTE MAXIMUM RATINGS

		VALUE		UNITS
		MIN	MAX	
Supply voltage, $V_{S–}$ to V_{S+}			5.5	V
Input/output voltage, $V_{IN±}$, $V_{OUT±}$, and V_{OCM} pins		$(V_{S–}) – 0.7$	$(V_{S+}) + 0.7$	V
Differential input voltage, V_{ID}			1	V
Continuous output current, I_O			50	mA
Continuous input current, I_i			0.75	mA
Continuous power dissipation		See the Thermal Information		
Maximum junction temperature, T_J			150	°C
Operating free-air temperature range, T_A		–40	+125	°C
Storage temperature range, T_{stg}		–65	+150	°C
Electrostatic discharge (ESD) ratings:	Human body model (HBM)		2.5	kV
	Charge device model (CDM)		500	V

THERMAL INFORMATION

THERMAL METRIC (1)		TSSOP (PW)	UNITS
		16 PINS	
θ_{JA}	Junction-to-ambient thermal resistance	122.4	°C/W
θ_{JCtop}	Junction-to-case (top) thermal resistance	61.2	
θ_{JB}	Junction-to-board thermal resistance	66.7	
ψ_{JT}	Junction-to-top characterization parameter	14.4	
ψ_{JB}	Junction-to-board characterization parameter	66.2	
θ_{JCbot}	Junction-to-case (bottom) thermal resistance	N/A	

(1) For more information about traditional and new thermal metrics, see the IC Package Thermal Metrics application report, SPRA953.

Copyright © 2013, Texas Instruments Incorporated

ELECTRICAL CHARACTERISTICS: V_S = 2.7 V

Test conditions at T_A = 25°C, V_{S+} = 2.7 V, V_{S-} = 0 V, V_{OCM} = open, V_{OUT} = 2 V_{PP}, R_F = 2 kΩ, R_L = 2 kΩ differential, G = 1 V/V, single-ended input, differential output, and input and output referenced to mid-supply, unless otherwise noted.

PARAMETER	CONDITIONS	MIN	TYP	MAX	UNITS	TEST LEVEL(1)
AC PERFORMANCE						
Small-signal bandwidth	V_{OUT} = 100 mV_{PP}, G = 1		34		MHz	C
	V_{OUT} = 100 mV_{PP}, G = 2		16			
	V_{OUT} = 100 mV_{PP}, G = 5		6			
	V_{OUT} = 100 mV_{PP}, G = 10		2.7			
Gain-bandwidth product	V_{OUT} = 100 mV_{PP}, G = 10		27		MHz	
Large-signal bandwidth	V_{OUT} = 2 V_{PP}, G = 1		34		MHz	
Bandwidth for 0.1-dB flatness	V_{OUT} = 2 V_{PP}, G = 1		12		MHz	
Slew rate, rise/fall, 25% to 75%	V_{OUT} = 2-V step		190/320		V/µs	
Rise/fall time, 10% to 90%			5.2/6.1		ns	
Settling time to 1%, rise/fall			25/20		ns	
Settling time to 0.1%, rise/fall			60/60			
Settling time to 0.01%, rise/fall			150/110		ns	
Overshoot/undershoot, rise/fall			1/1		%	
2nd-order harmonic distortion	f = 1 kHz, V_{OUT} = 1 V_{RMS}		–122		dBc	
	f = 10 kHz		–127			
	f = 1 MHz		–59			
3rd-order harmonic distortion	f = 1 kHz, V_{OUT} = 1 V_{RMS}		–130		dBc	
	f = 10 kHz		–135			
	f = 1 MHz		–70			
2nd-order intermodulation distortion	f = 1 MHz, 200-kHz tone spacing, V_{OUT} envelope = 2 V_{PP}		–83		dBc	
3rd-order intermodulation distortion			–81			
Input voltage noise	f = 1 kHz		10		nV/√Hz	
Voltage noise 1/f corner frequency			45		Hz	
Input current noise	f = 100 kHz		0.25		pA/√Hz	
Current noise 1/f corner frequency			6.5		kHz	
Overdrive recovery time	Overdrive = 0.5 V		65		ns	
Output balance error	V_{OUT} = 100 mV, f = 1 MHz		–65		dB	
Closed-loop output impedance	f = 1 MHz (differential)		2.5		Ω	
Channel-to-channel crosstalk	f = 10 kHz, measured differentially		-133		dB	

(1) Test levels (all values set by characterization and simulation): (A) 100% tested at +25°C; over temperature limits by characterization and simulation. (B) Not tested in production; limits set by characterization and simulation. (C) Typical value only for information.

Copyright © 2013, Texas Instruments Incorporated

ELECTRICAL CHARACTERISTICS: V_S = 2.7 V (continued)

Test conditions at T_A = 25°C, V_{S+} = 2.7 V, V_{S-} = 0 V, V_{OCM} = open, V_{OUT} = 2 V_{PP}, R_F = 2 kΩ, R_L = 2 kΩ differential, G = 1 V/V, single-ended input, differential output, and input and output referenced to mid-supply, unless otherwise noted.

PARAMETER	CONDITIONS	MIN	TYP	MAX	UNITS	TEST LEVEL(1)
DC PERFORMANCE						
Open-loop voltage gain (A_{OL})		100	113		dB	A
Input-referred offset voltage	T_A = +25°C		±80	±400	µV	A
	T_A = 0°C to +70°C			±715		B
	T_A = –40°C to +85°C			±855		
	T_A = –40°C to +125°C			±1300		
Input offset voltage drift(2)	T_A = 0°C to +70°C		±2	±7	µV/°C	B
	T_A = –40°C to +85°C		±2	±7		
	T_A = –40°C to +125°C		±3	±9		
Input bias current	T_A = +25°C		200	250	nA	A
	T_A = 0°C to +70°C			275		B
	T_A = –40°C to +85°C			286		
	T_A = –40°C to +125°C			305		
Input bias current drift(2)	T_A = 0°C to +70°C		0.45	0.55	nA/°C	B
	T_A = –40°C to +85°C		0.45	0.55		
	T_A = –40°C to +125°C		0.45	0.55		
Input offset current	T_A = +25°C		±5	±50	nA	A
	T_A = 0°C to +70°C			±55		B
	T_A = –40°C to +85°C			±57		
	T_A = –40°C to +125°C			±60		
Input offset current drift(2)	T_A = 0°C to +70°C		±0.03	±0.1	nA/°C	B
	T_A = –40°C to +85°C		±0.03	±0.1		
	T_A = –40°C to +125°C		±0.03	±0.1		
INPUT						
Common-mode input low	T_A = +25°C, CMRR > 87 dB		V_{S-} – 0.2	V_{S-}	V	A
	T_A = –40°C to +125°C, CMRR > 87 dB		V_{S-} – 0.2	V_{S-}		B
Common-mode input high	T_A = +25°C, CMRR > 87 dB	V_{S+} – 1.2	V_{S+} – 1.1		V	A
	T_A = –40°C to +125°C, CMRR > 87 dB	V_{S+} – 1.2	V_{S+} – 1.1			B
Common-mode rejection ratio		90	116		dB	A
Input impedance common-mode			200 || 1.2		kΩ || pF	C
Input impedance differential mode			200 || 1			C
OUTPUT						
Single-ended output voltage: low	T_A = +25°C		V_{S-} + 0.06	V_{S-} + 0.2	V	A
	T_A = –40°C to +125°C		V_{S-} + 0.06	V_{S-} + 0.2		B
Single-ended output voltage: high	T_A = +25°C	V_{S+} – 0.2	V_{S+} – 0.11		V	A
	T_A = –40°C to +125°C	V_{S+} – 0.2	V_{S+} – 0.11			B
Output saturation voltage: high/low			110/60		mV	C
Linear output current drive	T_A = +25°C	±15	±22		mA	A
	T_A = –40°C to +125°C	±15				B

(2) Input offset voltage drift, input bias current drift, and input offset current drift are average values calculated by taking data at the end points, computing the difference, and dividing by the temperature range.

Copyright © 2013, Texas Instruments Incorporated

ELECTRICAL CHARACTERISTICS: V_S = 2.7 V (continued)

Test conditions at T_A = 25°C, V_{S+} = 2.7 V, V_{S-} = 0 V, V_{OCM} = open, V_{OUT} = 2 V_{PP}, R_F = 2 kΩ, R_L = 2 kΩ differential, G = 1 V/V, single-ended input, differential output, and input and output referenced to mid-supply, unless otherwise noted.

PARAMETER	CONDITIONS	MIN	TYP	MAX	UNITS	TEST LEVEL(1)
POWER SUPPLY						
Specified operating voltage		2.5		5.5	V	B
Quiescent operating current/ch	T_A = +25°C, $\overline{PD}$ = V_{S+}		230	330	µA	A
	T_A = –40°C to +125°C, $\overline{PD}$ = V_{S+}		270	370		B
Power-supply rejection (PSRR)		87	108		dB	A
POWER DOWN						
Enable voltage threshold	Specified on above 2.1 V			2.1	V	A
Disable voltage threshold	Specified off below 0.7 V	0.7				A
Disable pin bias current	$\overline{PD}$ = V_{S-} + 0.5 V		50	500	nA	A
Power-down quiescent current	$\overline{PD}$ = V_{S-} + 0.5 V		0.5	2	µA	A
Turn-on time delay	Time from $\overline{PD}$ = high to V_{OUT} = 90% of final value, R_L= 200 Ω		650		ns	C
Turn-off time delay	Time from $\overline{PD}$ = low to V_{OUT} = 10% of original value, R_L= 200 Ω		20			
OUTPUT COMMON-MODE VOLTAGE CONTROL (V_{OCM})						
Small-signal bandwidth	V_{OCM} input = 100 mV_{PP}		23		MHz	C
Slew rate	V_{OCM} input = 1 V_{STEP}		14		V/µs	C
Gain		0.99	0.996	1.01	V/V	A
Common-mode offset voltage	Offset = output common-mode voltage – V_{OCM} input voltage		±1	±5	mV	A
V_{OCM} input bias current	V_{OCM} = (V_{S+} – V_{S-})/2		±20	±100	nA	A
V_{OCM} input voltage range		0.8	0.75 to 1.9	1.75	V	A
V_{OCM} input impedance			100 || 1.6		kΩ || pF	C
Default voltage offset from (V_{S+} – V_{S-})/2	Offset = output common-mode voltage – (V_{S+} – V_{S-})/2		±3	±10	mV	A

Copyright © 2013, Texas Instruments Incorporated

ELECTRICAL CHARACTERISTICS: V_S = 5 V

Test conditions at T_A = +25°C, V_{S+} = 5 V, V_{S-} = 0 V, V_{OCM} = open, V_{OUT} = 2 V_{PP}, R_F = 2 kΩ, R_L = 2 kΩ differential, G = 1 V/V, single-ended input, differential output, and input and output referenced to mid-supply, unless otherwise noted.

PARAMETER	CONDITIONS	MIN	TYP	MAX	UNITS	TEST LEVEL (1)
AC PERFORMANCE						
Small-signal bandwidth	V_{OUT} = 100 mV_{PP}, G = 1		36		MHz	C
	V_{OUT} = 100 mV_{PP}, G = 2		17			
	V_{OUT} = 100 mV_{PP}, G = 5		6			
	V_{OUT} = 100 mV_{PP}, G = 10		2.7			
Gain-bandwidth product	V_{OUT} = 100 mV_{PP}, G = 10		27		MHz	
Large-signal bandwidth	V_{OUT} = 2 V_{PP}, G = 1		36		MHz	
Bandwidth for 0.1-dB flatness	V_{OUT} = 2 V_{PP}, G = 1		15		MHz	
Slew rate, rise/fall, 25% to 75%	V_{OUT} = 2 V_{Step}		220/390		V/µs	
Rise/fall time, 10% to 90%			4.6/5.6		ns	
Settling time to 1%, rise/fall			25/20		ns	
Settling time to 0.1%, rise/fall			60/60		ns	
Settling time to 0.01%, rise/fall			150/110		ns	
Overshoot/undershoot, rise/fall			1/1		%	
2nd-order harmonic distortion	f = 1 kHz, V_{OUT} = 1 V_{RMS}		–122		dBc	
	f = 10 kHz		–128			
	f = 1 MHz		–60			
3rd-order harmonic distortion	f = 1 kHz, V_{OUT} = 1 V_{RMS}		–130		dBc	
	f = 10 kHz		–137			
	f = 1 MHz		–71			
2nd-order intermodulation distortion	f = 1 MHz, 200-kHz tone spacing, V_{OUT} envelope = 2 V_{PP}		–85		dBc	
3rd-order intermodulation distortion			–83			
Input voltage noise	f = 1 kHz		10		nV/√Hz	
Voltage noise 1/f corner frequency			45		Hz	
Input current noise	f = 100 kHz		0.25		pA/√Hz	
Current noise 1/f corner frequency			6.5		kHz	
Overdrive recovery time	Overdrive = 0.5 V		65		ns	
Output balance error	V_{OUT} = 100 mV, f = 1 MHz		–67		dB	
Closed-loop output impedance	f = 1 MHz (differential)		2.5		Ω	
Channel-to-channel crosstalk	f = 10 kHz, measured differentially		-133		dB	

(1) Test levels (all values set by characterization and simulation): (A) 100% tested at +25°C; over temperature limits by characterization and simulation. (B) Not tested in production; limits set by characterization and simulation. (C) Typical value only for information.

Copyright © 2013, Texas Instruments Incorporated

ELECTRICAL CHARACTERISTICS: V_S = 5 V (continued)

Test conditions at T_A = +25°C, V_{S+} = 5 V, V_{S-} = 0 V, V_{OCM} = open, V_{OUT} = 2 V_{PP}, R_F = 2 kΩ, R_L = 2 kΩ differential, G = 1 V/V, single-ended input, differential output, and input and output referenced to mid-supply, unless otherwise noted.

PARAMETER	CONDITIONS	MIN	TYP	MAX	UNITS	TEST LEVEL(1)
DC PERFORMANCE						
Open-loop voltage gain (A_{OL})		100	114		dB	A
Input-referred offset voltage	T_A = +25°C		±80	±400	µV	A
	T_A = 0°C to +70°C			±715		B
	T_A = –40°C to +85°C			±855		
	T_A = –40°C to +125°C			±1300		
Input offset voltage drift(2)	T_A = 0°C to +70°C		±2	±7	µV/°C	B
	T_A = –40°C to +85°C		±2	±7		
	T_A = –40°C to +125°C		±3	±9		
Input bias current	T_A = +25°C		200	250	nA	A
	T_A = 0°C to +70°C			279		B
	T_A = –40°C to +85°C			292		
	T_A = –40°C to +125°C			315		
Input bias current drift(2)	T_A = 0°C to +70°C		0.5	0.65	nA/°C	B
	T_A = –40°C to +85°C		0.5	0.65		
	T_A = –40°C to +125°C		0.5	0.65		
Input offset current	T_A = +25°C		±5	±50	nA	A
	T_A = 0°C to +70°C			±55		B
	T_A = –40°C to +85°C			±57		
	T_A = –40°C to +125°C			±60		
Input offset current drift(2)	T_A = 0°C to +70°C		±0.03	±0.1	nA/°C	B
	T_A = –40°C to +85°C		±0.03	±0.1		
	T_A = –40°C to +125°C		±0.03	±0.1		
INPUT						
Common-mode input: low	T_A = +25°C, CMRR > 87 dB		V_{S-} – 0.2	V_{S-}	V	A
	T_A = –40°C to +125°C, CMRR > 87 dB		V_{S-} – 0.2	V_{S-}		B
Common-mode input: high	T_A = +25°C, CMRR > 87 dB	V_{S+} – 1.2	V_{S+} –1.1		V	A
	T_A = –40°C to +125°C, CMRR > 87 dB	V_{S+} – 1.2	V_{S+} –1.1			B
Common-mode rejection ratio		90	116		dB	A
Input impedance common-mode			200 || 1.2		kΩ || pF	C
Input impedance differential mode			200 || 1			C
OUTPUT						
Linear output voltage: low	T_A = +25°C		V_{S-} + 0.1	V_{S-} + 0.2	V	A
	T_A = –40°C to +125°C		V_{S-} + 0.1	V_{S-} + 0.2		B
Linear output voltage: high	T_A = +25°C	V_{S+} – 0.25	V_{S+} – 0.12			A
	T_A = –40°C to +125°C	V_{S+} – 0.25	V_{S+} – 0.12			B
Output saturation voltage: high/low			120/100		mV	C
Linear output current drive	T_A = +25°C	±15	±25		mA	A
	T_A = –40°C to +125°C	±15				B

(2) Input offset voltage drift, input bias current drift, and input offset current drift are average values calculated by taking data at the end points, computing the difference, and dividing by the temperature range.

Copyright © 2013, Texas Instruments Incorporated

ELECTRICAL CHARACTERISTICS: V_S = 5 V (continued)

Test conditions at T_A = +25°C, V_{S+} = 5 V, V_{S-} = 0 V, V_{OCM} = open, V_{OUT} = 2 V_{PP}, R_F = 2 kΩ, R_L = 2 kΩ differential, G = 1 V/V, single-ended input, differential output, and input and output referenced to mid-supply, unless otherwise noted.

PARAMETER	CONDITIONS	MIN	TYP	MAX	UNITS	TEST LEVEL(1)
POWER SUPPLY						
Specified operating voltage		2.5		5.5	V	B
Quiescent operating current/ch	T_A = 25°C, $\overline{PD}$ = V_{S+}		250	350	µA	A
	T_A = –40°C to 125°C, $\overline{PD}$ = V_{S+}		290	390		B
Power-supply rejection (PSRR)		87	108		dB	A
POWER DOWN						
Enable voltage threshold	Specified on above 2.1 V			2.1	V	A
Disable voltage threshold	Specified off below 0.7 V	0.7				A
Disable pin bias current	$\overline{PD}$ = V_{S-} + 0.5 V		50	500	nA	A
Power-down quiescent current	$\overline{PD}$ = V_{S-} + 0.5 V		0.5	2	µA	A
Turn-on time delay	Time from $\overline{PD}$ = high to V_{OUT} = 90% of final value, R_L= 200 Ω		600		ns	C
Turn-off time delay	Time from $\overline{PD}$ = low to V_{OUT} = 10% of original value, R_L= 200 Ω		15			
OUTPUT COMMON-MODE VOLTAGE CONTROL (V_{OCM})						
Small-signal bandwidth	V_{OCM} input = 100 mV_{PP}		24		MHz	C
Slew rate	V_{OCM} input = 1 V_{STEP}		15		V/µs	C
Gain		0.99	0.996	1.01	V/V	A
Common-mode offset voltage	Offset = output common-mode voltage – V_{OCM} input voltage		±1	±5	mV	A
V_{OCM} input bias current	V_{OCM} = (V_{S+} – V_{S-})/2		±20	±120	nA	A
V_{OCM} input voltage range		0.95	0.75 to 4.15	4.0	V	A
V_{OCM} input impedance			65 || 0.86		kΩ || pF	C
Default voltage offset from (V_{S+} – V_{S-})/2	Offset = output common-mode voltage – (V_{S+} – V_{S-})/2		±3	±10	mV	A

Copyright © 2013, Texas Instruments Incorporated

PIN CONFIGURATIONS

TSSOP-16 (PW) PACKAGE
(TOP VIEW)

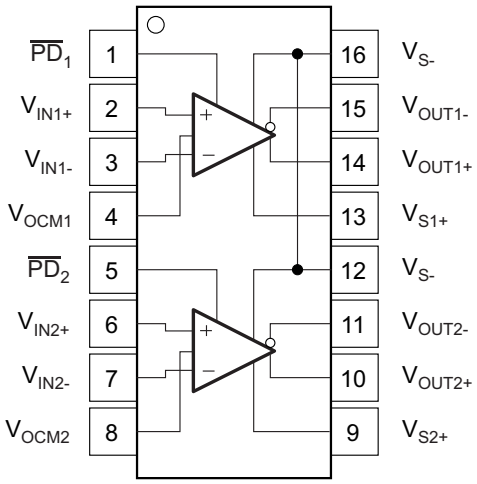

PIN FUNCTIONS

NUMBER	NAME	DESCRIPTION
THS4532 PW, TSSOP PACKAGE		
1	$\overline{PD}_1$	Power-down 1, $\overline{PD}$ = logic low = low power mode, $\overline{PD}$ = logic high = normal operation **(PIN MUST BE DRIVEN)**
2	V_{IN1+}	Noninverting amplifier 1 input
3	V_{IN1-}	Inverting amplifier 1 input
4	V_{OCM1}	Common-mode voltage input 1
5	$\overline{PD}_2$	Amplifier 2 Power-down, $\overline{PD}$ = logic low = low power mode, $\overline{PD}$ = logic high = normal operation **(PIN MUST BE DRIVEN)**
6	V_{IN2+}	Noninverting amplifier 2 input
7	V_{IN2-}	Inverting amplifier 2 input
8	V_{OCM2}	Common-mode voltage input 2
9	V_{S2+}	Amplifier 2 positive power-supply input
10	V_{OUT2+}	Noninverting amplifier 2 output
11	V_{OUT2-}	Inverting amplifier 2 output
12	V_{S-}	Negative power-supply input. Note V_{S-} tied together on multichannel devices
13	V_{S1+}	Amplifier 1 positive power-supply input
14	V_{OUT1+}	Noninverting amplifier 1 output
15	V_{OUT1-}	Inverting amplifier 1 output
16	V_{S-}	Negative power-supply input. Note V_{S-} tied together on multichannel devices

Copyright © 2013, Texas Instruments Incorporated

TABLE OF GRAPHS

Description	V_S = 2.7 V	V_S = 5 V
Small-signal frequency response	Figure 2	Figure 36
Large-signal frequency response	Figure 3	Figure 37
Large- and small- signal pulse response	Figure 4	Figure 38
Single-ended slew rate vs V_{OUT} step	Figure 5	Figure 39
Differential slew rate vs V_{OUT} step	Figure 6	Figure 40
Overdrive recovery	Figure 7	Figure 41
10-kHz FFT on audio analyzer	Figure 8	Figure 42
Harmonic distortion vs Frequency	Figure 9	Figure 43
Harmonic distortion vs Output voltage at 1 MHz	Figure 10	Figure 44
Harmonic distortion vs Gain at 1 MHz	Figure 11	Figure 45
Harmonic distortion vs Load at 1 MHz	Figure 12	Figure 46
Harmonic distortion vs V_{OCM} at 1 MHz	Figure 13	Figure 47
Two-tone, 2nd and 3rd order intermodulation distortion vs Frequency	Figure 14	Figure 48
Single-ended output voltage swing vs Load resistance	Figure 15	Figure 49
Single-ended output saturation voltage vs Load current	Figure 16	Figure 50
Main amplifier differential output impedance vs Frequency	Figure 17	Figure 51
Frequency response vs C_{LOAD}	Figure 18	Figure 52
R_O vs C_{LOAD}	Figure 19	Figure 53
Rejection ratio vs Frequency	Figure 20	Figure 54
Crosstalk vs Frequency	Figure 21	Figure 55
Turn-on time	Figure 22	Figure 56
Turn-off time	Figure 23	Figure 57
Input-referred voltage noise and current noise spectral density	Figure 24	Figure 58
Main amplifier differential open-loop gain and phase vs Frequency	Figure 25	Figure 59
Output balance error vs Frequency	Figure 26	Figure 60
V_{OCM} small signal frequency response	Figure 27	Figure 61
V_{OCM} large and small signal pulse response	Figure 28	Figure 62
V_{OCM} input impedance vs frequency	Figure 29	Figure 63
Count vs input offset current	Figure 30	Figure 64
Count vs input offset current temperature drift	Figure 31	Figure 65
Input offset current vs temperature	Figure 32	Figure 66
Count vs input offset voltage	Figure 33	Figure 67
Count vs input offset voltage temperature drift	Figure 34	Figure 68
Input offset voltage vs temperature	Figure 35	Figure 69

Copyright © 2013, Texas Instruments Incorporated

TYPICAL CHARACTERISTICS: V_S = 2.7V

Test conditions unless otherwise noted: V_{S+} = 2.7 V, V_{S-} = 0V, CM = open, V_{OUT} = 2Vpp, R_F = 2kΩ, R_L = 2kΩ Differential, G = 1V/V, Single-Ended Input, Differential Output, Input and Output Referenced to mid-supply unless otherwise noted.

SMALL-SIGNAL FREQUENCY RESPONSE

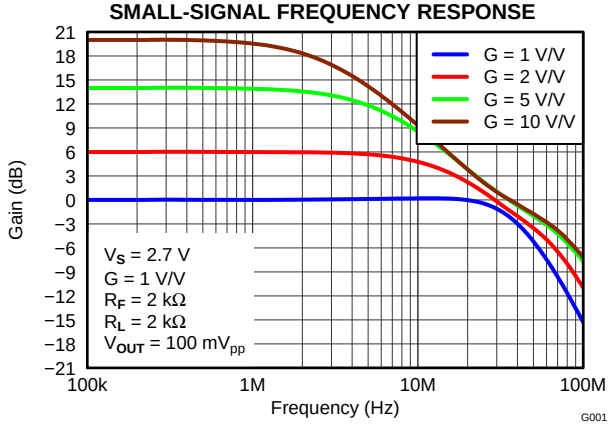

Figure 2.

LARGE-SIGNAL FREQUENCY RESPONSE

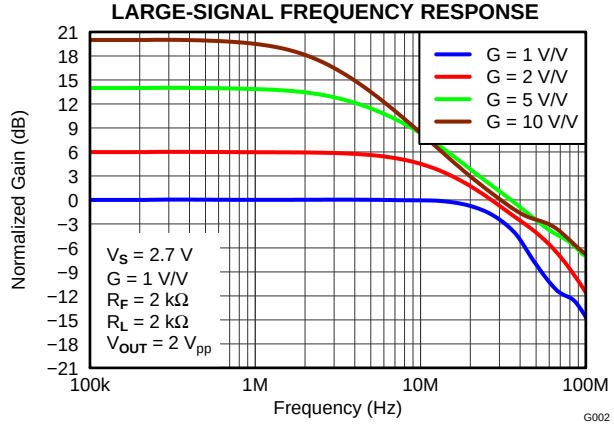

Figure 3.

LARGE- and SMALL-SIGNAL PULSE RESPONSE

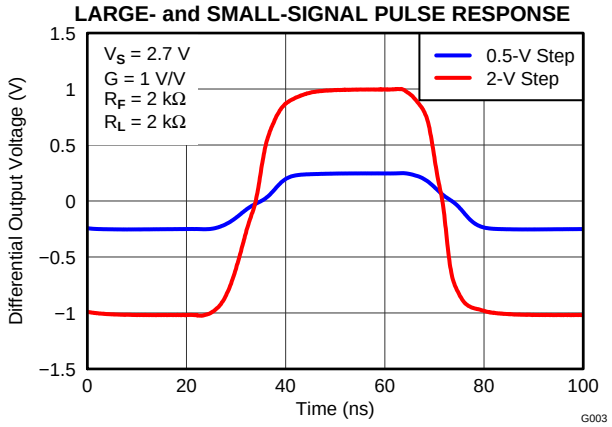

Figure 4.

SINGLE-ENDED SLEW RATE vs V_{OUT} STEP

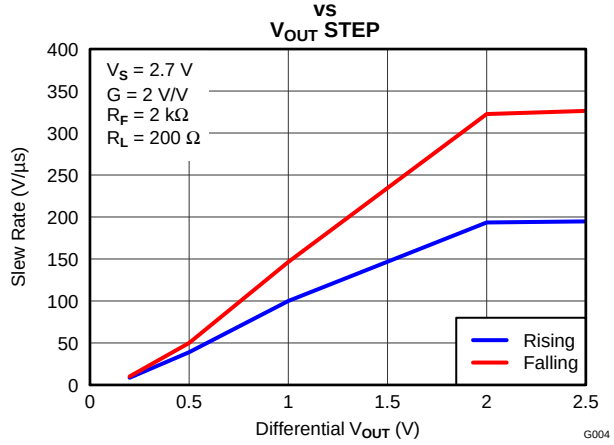

Figure 5.

DIFFERENTIAL SLEW RATE vs V_{OUT} STEP

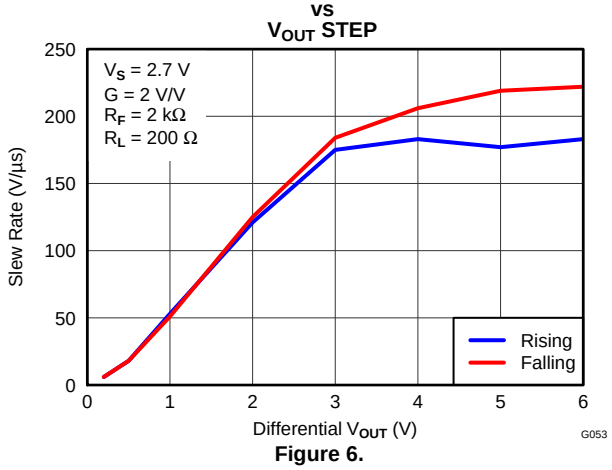

Figure 6.

OVERDRIVE RECOVERY

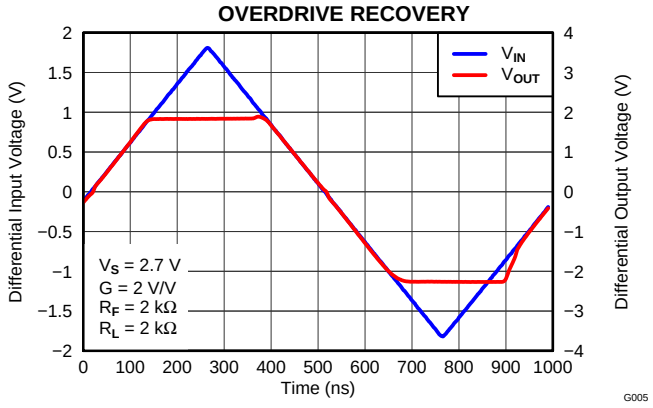

Figure 7.

TYPICAL CHARACTERISTICS: V_S = 2.7V (continued)

Test conditions unless otherwise noted: V_{S+} = 2.7 V, V_{S-} = 0V, CM = open, V_{OUT} = 2Vpp, R_F = 2kΩ, R_L = 2kΩ Differential, G = 1V/V, Single-Ended Input, Differential Output, Input and Output Referenced to mid-supply unless otherwise noted.

10-kHz FFT ON AUDIO ANALYZER

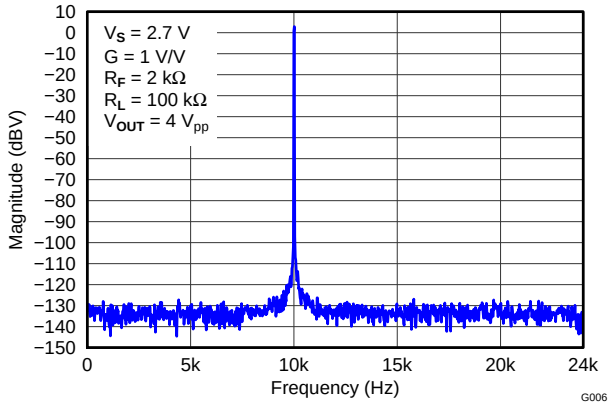

Figure 8.

HARMONIC DISTORTION vs FREQUENCY

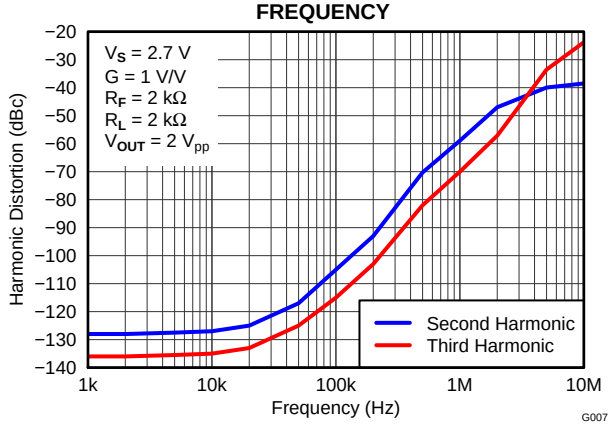

Figure 9.

HARMONIC DISTORTION vs OUTPUT VOLTAGE at 1 MHz

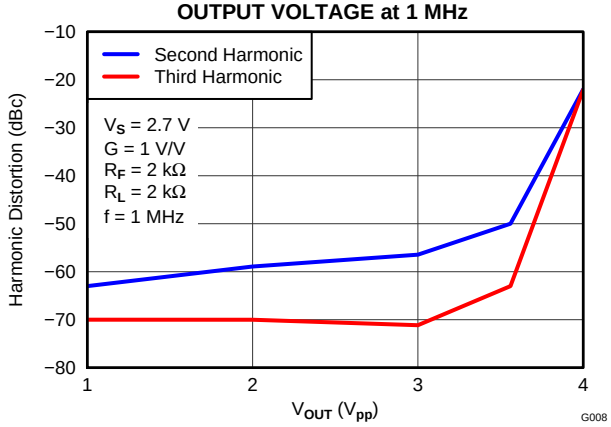

Figure 10.

HARMONIC DISTORTION vs GAIN at 1 MHz

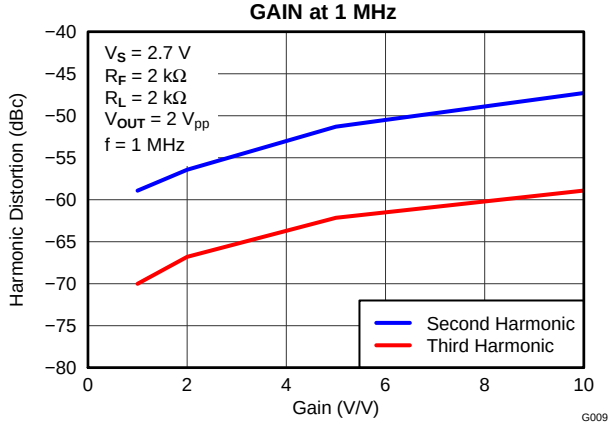

Figure 11.

HARMONIC DISTORTION vs LOAD at 1 MHz

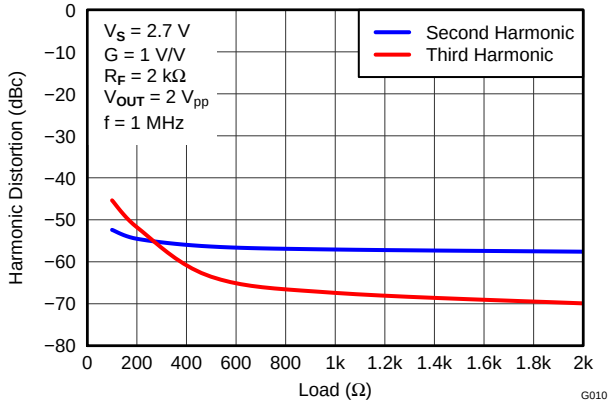

Figure 12.

HARMONIC DISTORTION vs V_{OCM} at 1 MHz

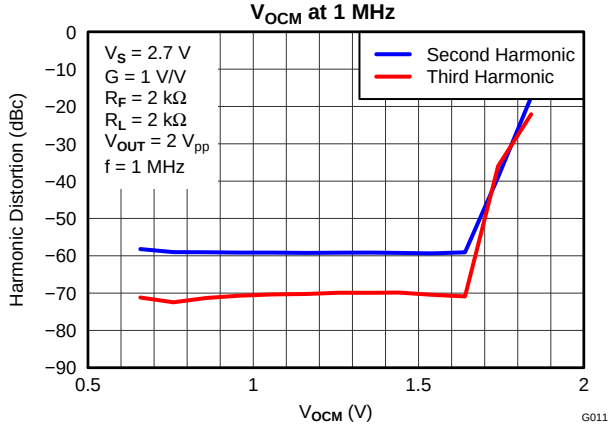

Figure 13.

Copyright © 2013, Texas Instruments Incorporated

TYPICAL CHARACTERISTICS: V_S = 2.7V (continued)

Test conditions unless otherwise noted: V_{S+} = 2.7 V, V_{S-} = 0V, CM = open, V_{OUT} = 2Vpp, R_F = 2kΩ, R_L = 2kΩ Differential, G = 1V/V, Single-Ended Input, Differential Output, Input and Output Referenced to mid-supply unless otherwise noted.

TWO-TONE, 2nd and 3rdORDER INTERMODULATION DISTORTION vs FREQUENCY

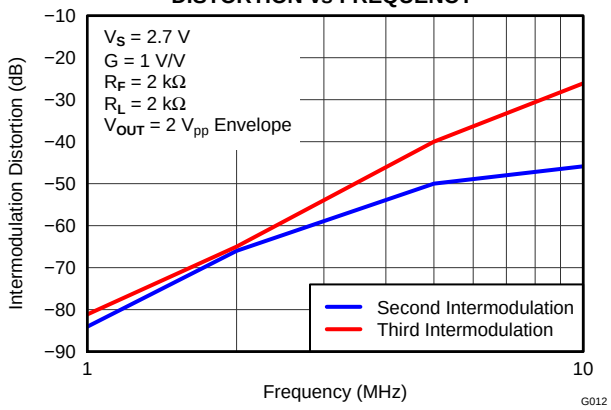

Figure 14.

SINGLE-ENDED OUTPUT VOLTAGE SWING vs LOAD RESISTANCE

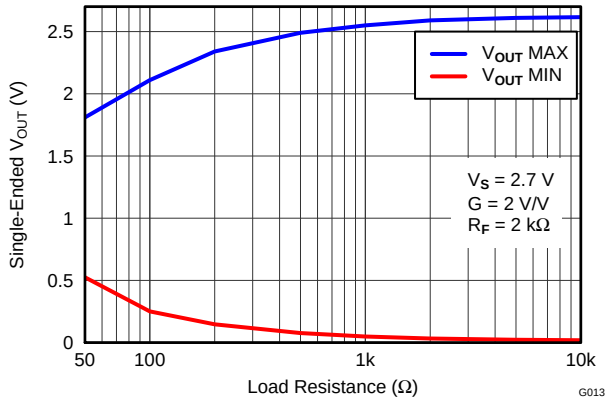

Figure 15.

SINGLE-ENDED OUTPUT SATURATION VOLTAGE vs LOAD CURRENT

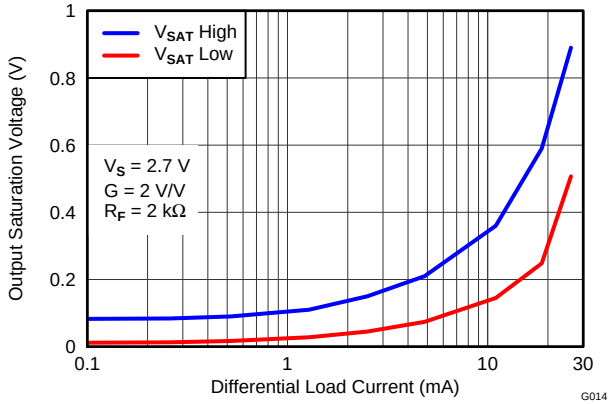

Figure 16.

MAIN AMPLIFIER DIFFERENTIAL OUTPUT IMPEDANCE vs FREQUENCY

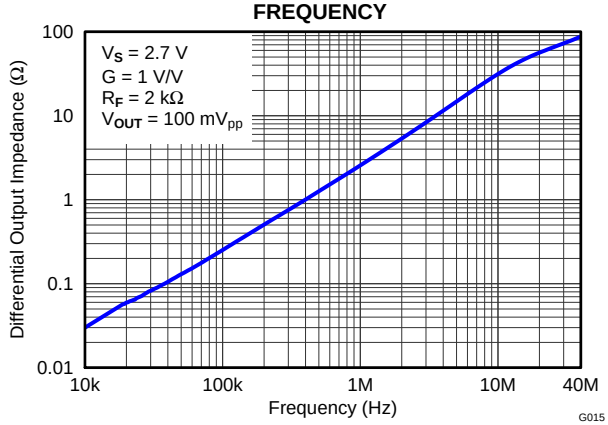

Figure 17.

FREQUENCY RESPONSE vs C_{LOAD}

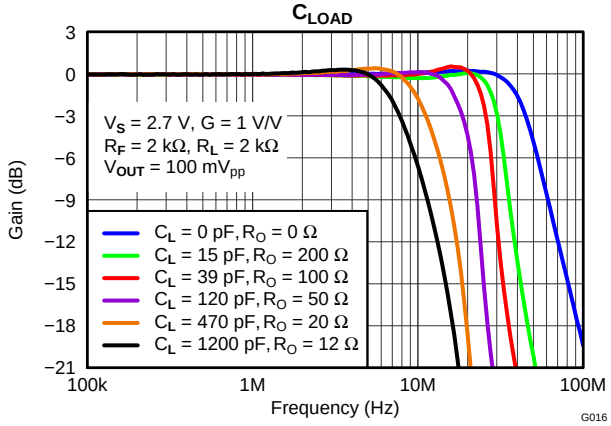

Figure 18.

R_O vs C_{LOAD}

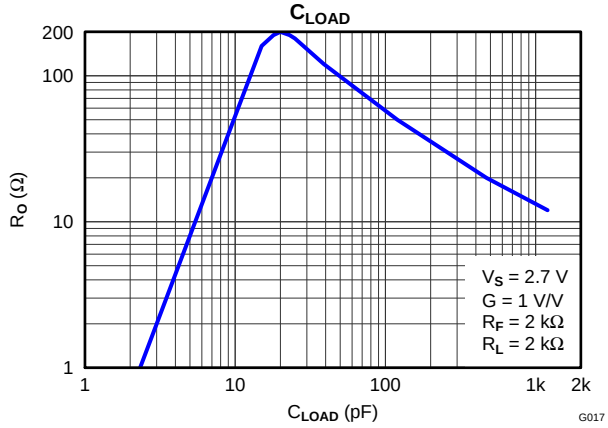

Figure 19.

TYPICAL CHARACTERISTICS: V_S = 2.7V (continued)

Test conditions unless otherwise noted: V_{S+} = 2.7 V, V_{S-} = 0V, CM = open, V_{OUT} = 2Vpp, R_F = 2kΩ, R_L = 2kΩ Differential, G = 1V/V, Single-Ended Input, Differential Output, Input and Output Referenced to mid-supply unless otherwise noted.

REJECTION RATIO vs FREQUENCY

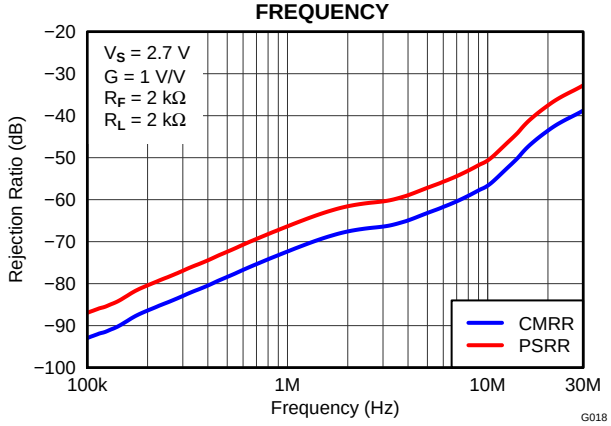

Figure 20.

CROSSTALK vs FREQUENCY

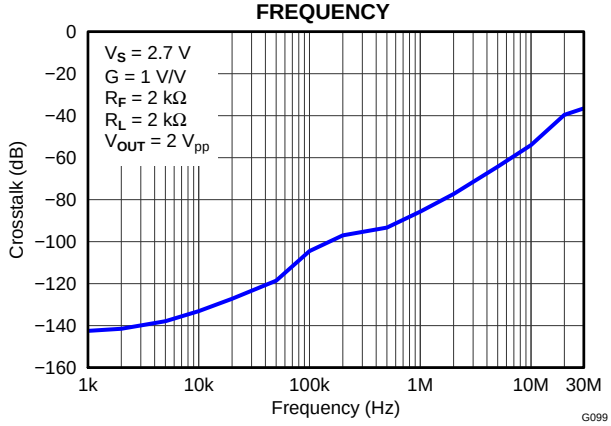

Figure 21.

TURN-ON TIME

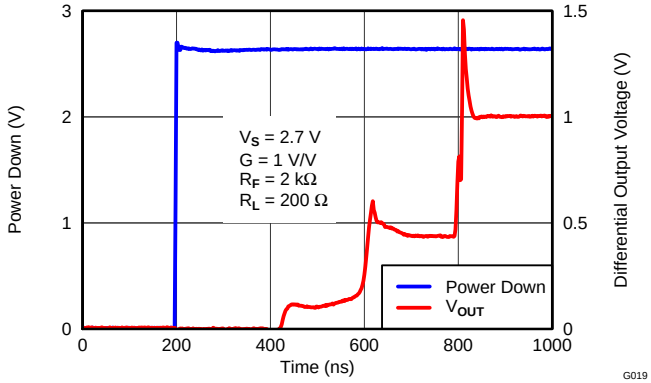

Figure 22.

TURN-OFF TIME

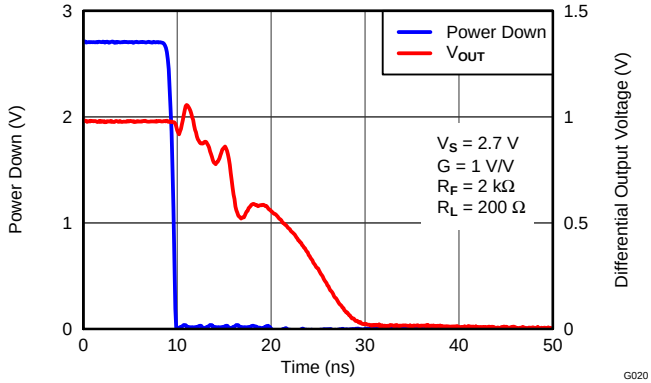

Figure 23.

INPUT-REFERRED VOLTAGE NOISE and CURRENT NOISE SPECTRAL DENSITY

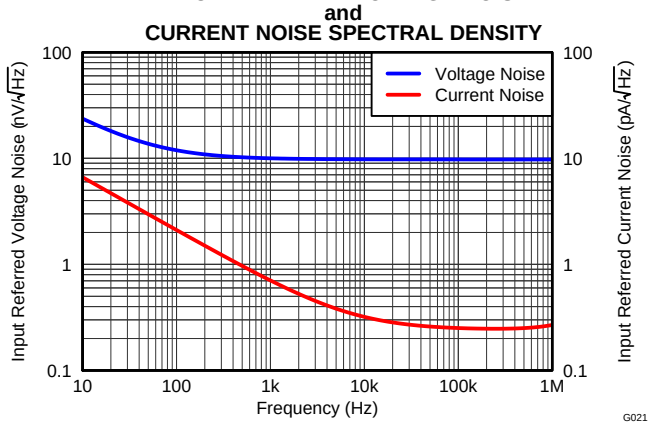

Figure 24.

MAIN AMPLIFIER DIFFERENTIAL OPEN-LOOP GAIN and PHASE vs FREQUENCY

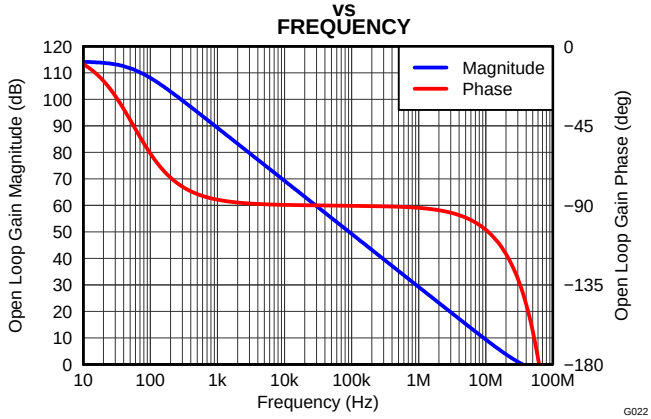

Figure 25.

Copyright © 2013, Texas Instruments Incorporated

TYPICAL CHARACTERISTICS: V_S = 2.7V (continued)

Test conditions unless otherwise noted: V_{S+} = 2.7 V, V_{S-} = 0V, CM = open, V_{OUT} = 2Vpp, R_F = 2kΩ, R_L = 2kΩ Differential, G = 1V/V, Single-Ended Input, Differential Output, Input and Output Referenced to mid-supply unless otherwise noted.

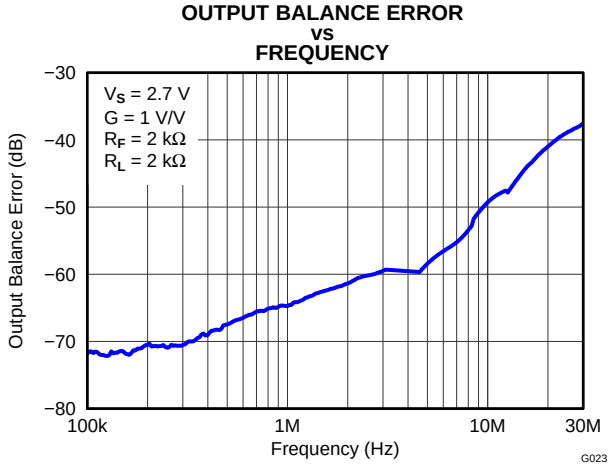

Figure 26.

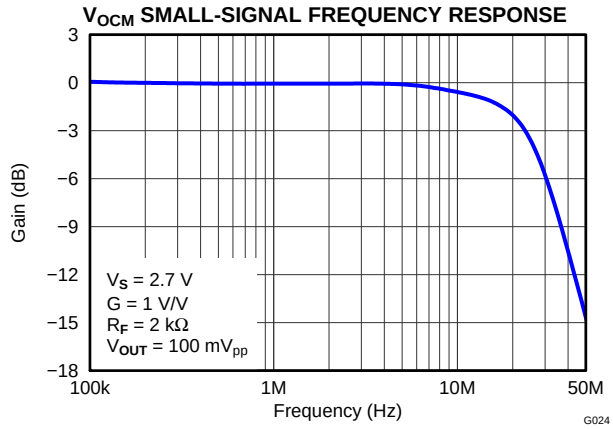

Figure 27.

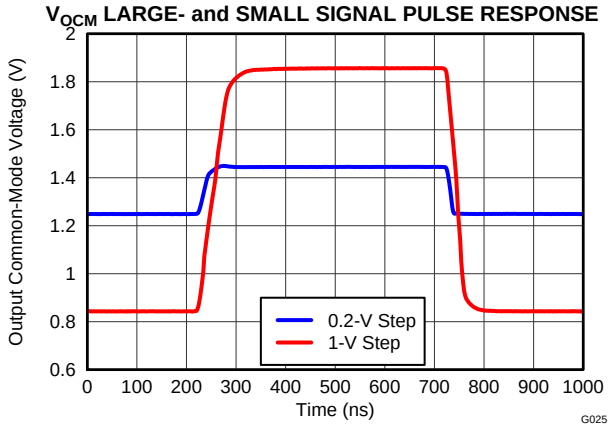

Figure 28.

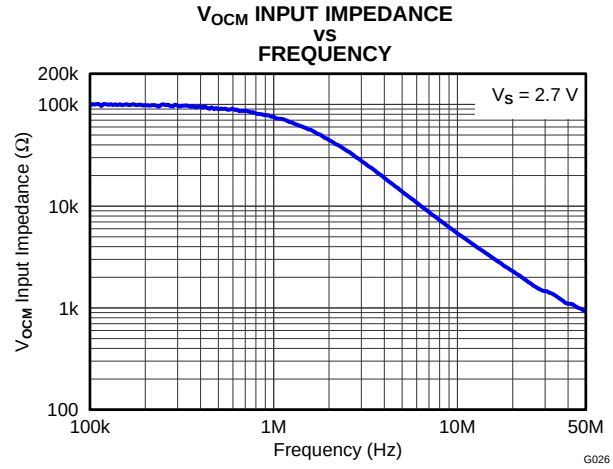

Figure 29.

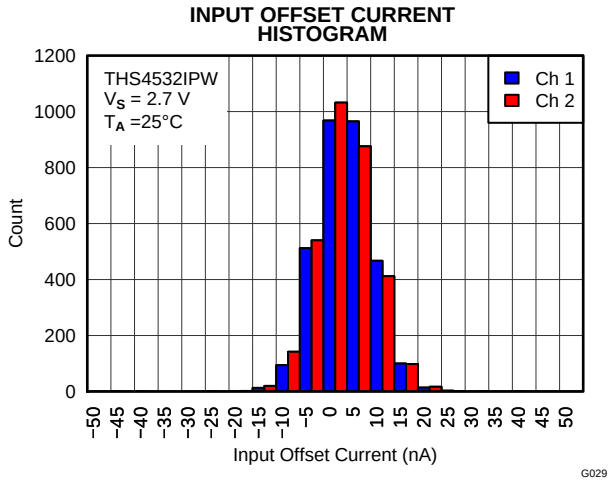

Figure 30.

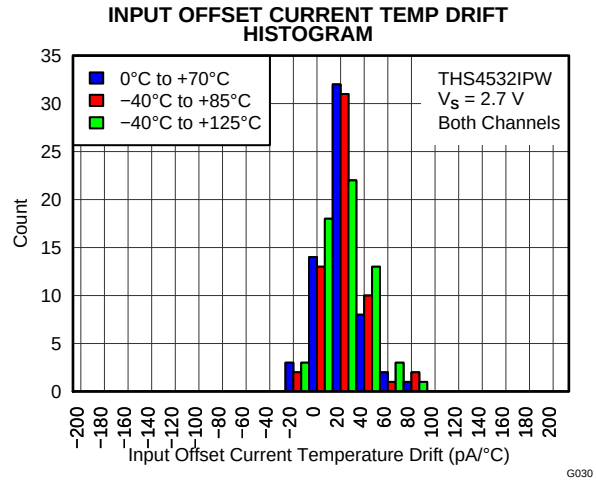

Figure 31.

TYPICAL CHARACTERISTICS: V_S = 2.7V (continued)

Test conditions unless otherwise noted: V_{S+} = 2.7 V, V_{S-} = 0V, CM = open, V_{OUT} = 2Vpp, R_F = 2kΩ, R_L = 2kΩ Differential, G = 1V/V, Single-Ended Input, Differential Output, Input and Output Referenced to mid-supply unless otherwise noted.

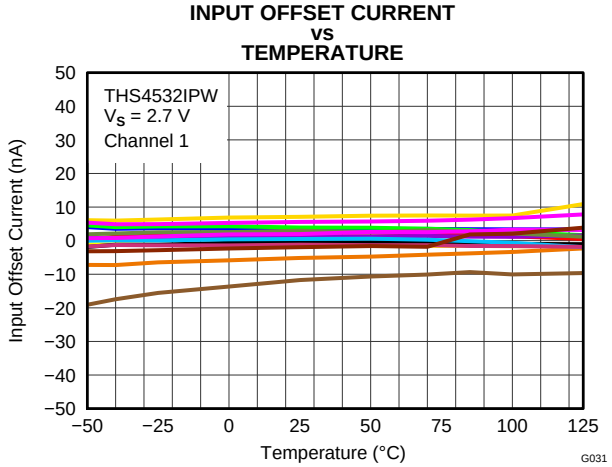

Figure 32.

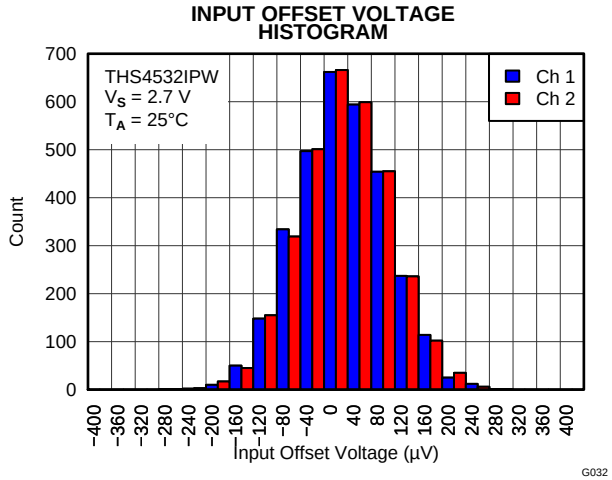

Figure 33.

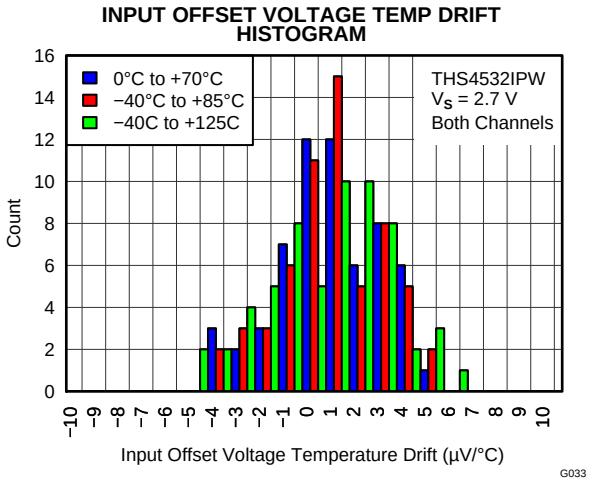

Figure 34.

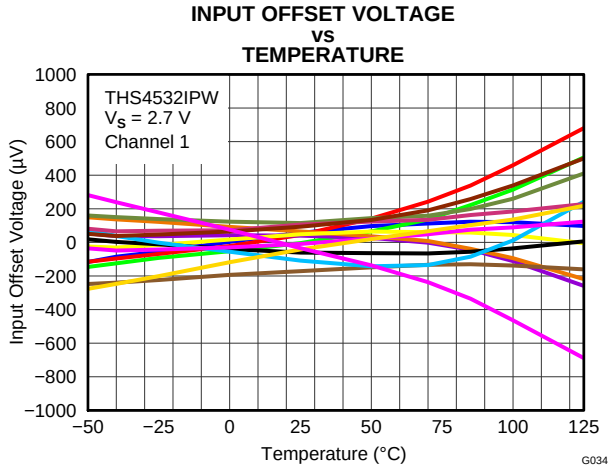

Figure 35.

Copyright © 2013, Texas Instruments Incorporated

TYPICAL CHARACTERISTICS: V_S = 5V

Test conditions unless otherwise noted: V_{S+} = 5 V, V_{S-} = 0V, V_{OCM} = open, V_{OUT} = 2Vpp, R_F = 2kΩ, R_L = 2kΩ Differential, G = 1V/V, Single-Ended Input, Differential Output, Input and Output Referenced to mid-supply, T_A = 25°Cunless otherwise noted.

SMALL-SIGNAL FREQUENCY RESPONSE

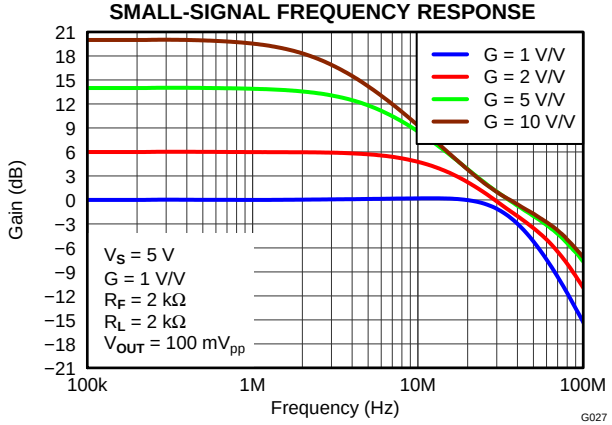

Figure 36.

LARGE-SIGNAL FREQUENCY RESPONSE

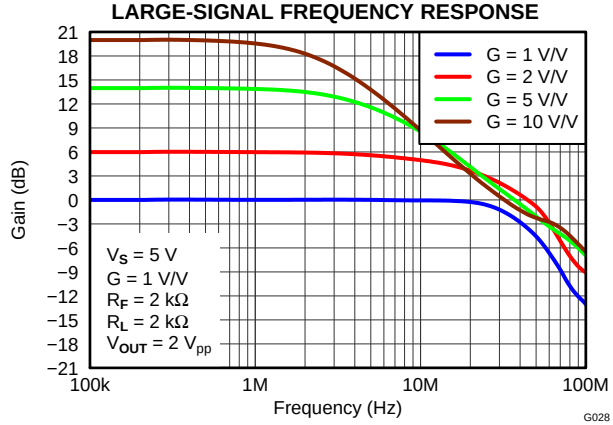

Figure 37.

LARGE- and SMALL-SIGNAL PULSE RESPONSE

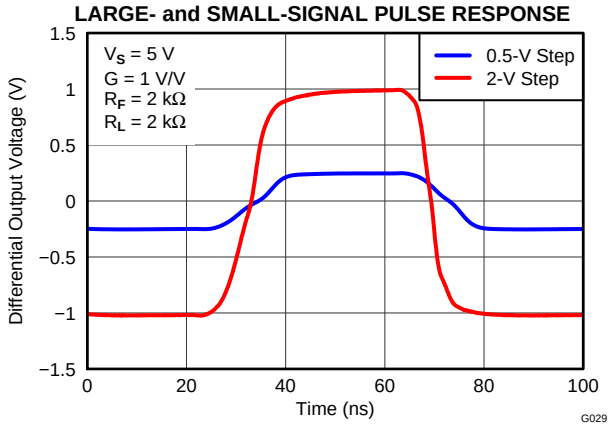

Figure 38.

SINGLE-ENDED SLEW RATE vs V_{OUT} STEP

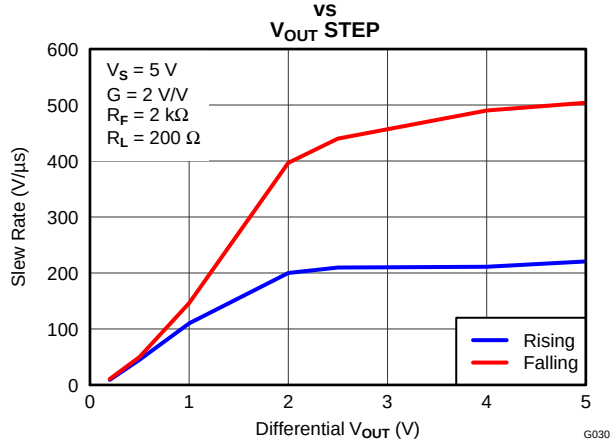

Figure 39.

DIFFERENTIAL SLEW RATE vs V_{OUT} STEP

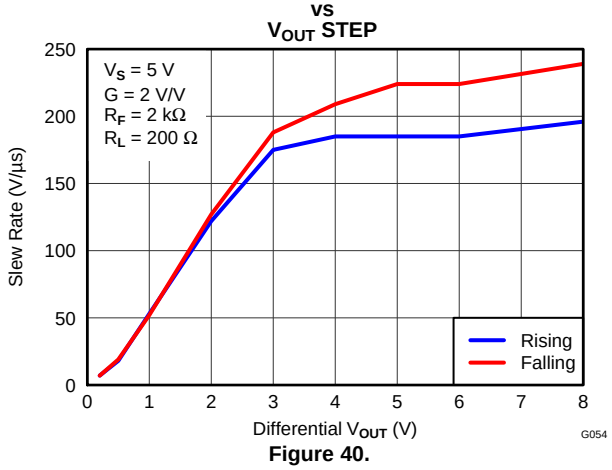

Figure 40.

OVERDRIVE RECOVERY

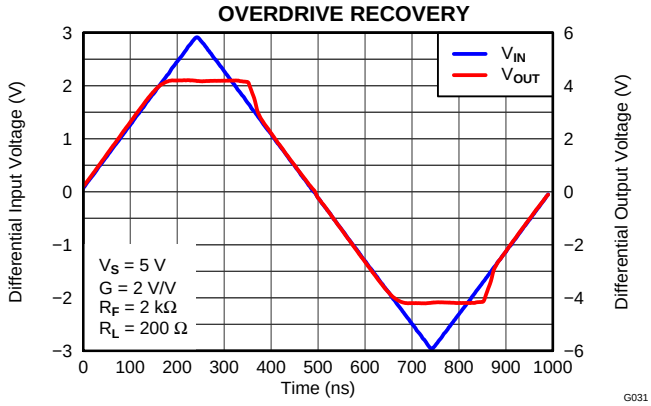

Figure 41.

TYPICAL CHARACTERISTICS: V_S = 5V (continued)

Test conditions unless otherwise noted: V_{S+} = 5 V, V_{S-} = 0V, V_{OCM} = open, V_{OUT} = 2Vpp, R_F = 2kΩ, R_L = 2kΩ Differential, G = 1V/V, Single-Ended Input, Differential Output, Input and Output Referenced to mid-supply, T_A = 25°Cunless otherwise noted.

10-kHz FFT ON AUDIO ANALYZER

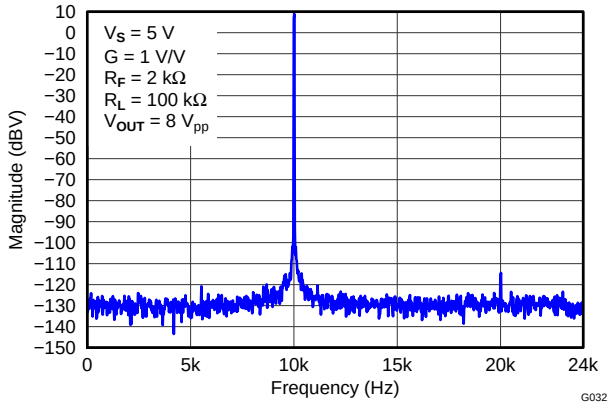

Figure 42.

HARMONIC DISTORTION vs FREQUENCY

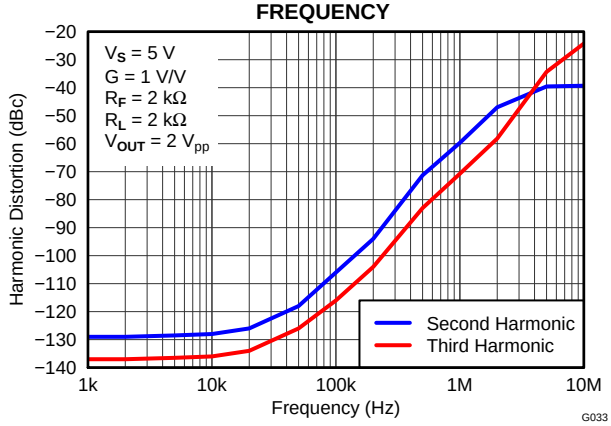

Figure 43.

HARMONIC DISTORTION vs OUTPUT VOLTAGE at 1 MHz

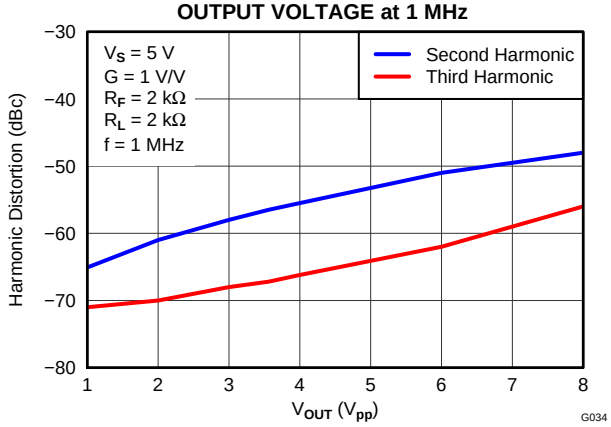

Figure 44.

HARMONIC DISTORTION vs GAIN at 1 MHz

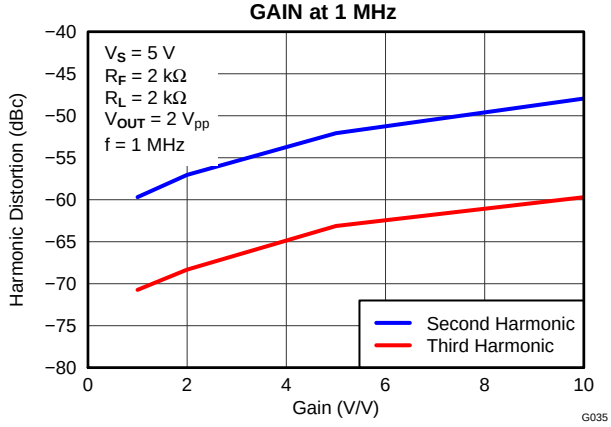

Figure 45.

HARMONIC DISTORTION vs LOAD at 1 MHz

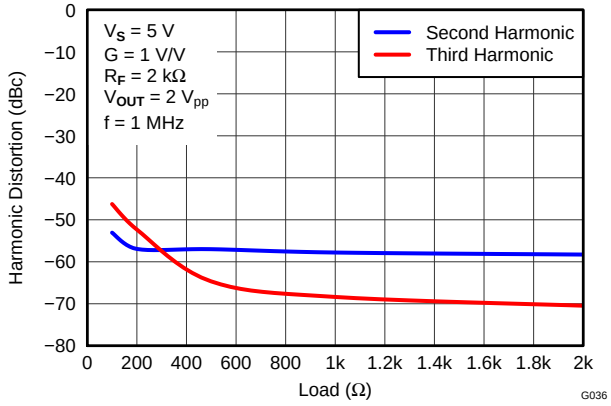

Figure 46.

HARMONIC DISTORTION vs V_{OCM} at 1 MHz

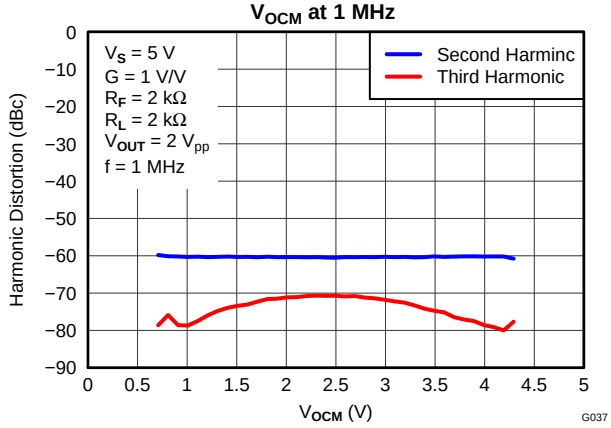

Figure 47.

Copyright © 2013, Texas Instruments Incorporated

TYPICAL CHARACTERISTICS: V_S = 5V (continued)

Test conditions unless otherwise noted: V_{S+} = 5 V, V_{S-} = 0V, V_{OCM} = open, V_{OUT} = 2Vpp, R_F = 2kΩ, R_L = 2kΩ Differential, G = 1V/V, Single-Ended Input, Differential Output, Input and Output Referenced to mid-supply, T_A = 25°Cunless otherwise noted.

TWO-TONE, 2nd and 3rdORDER INTERMODULATION DISTORTION vs FREQUENCY

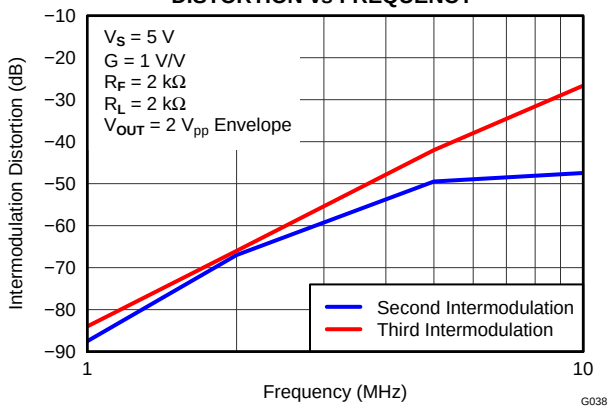

Figure 48.

SINGLE-ENDED OUTPUT VOLTAGE SWING vs LOAD RESISTANCE

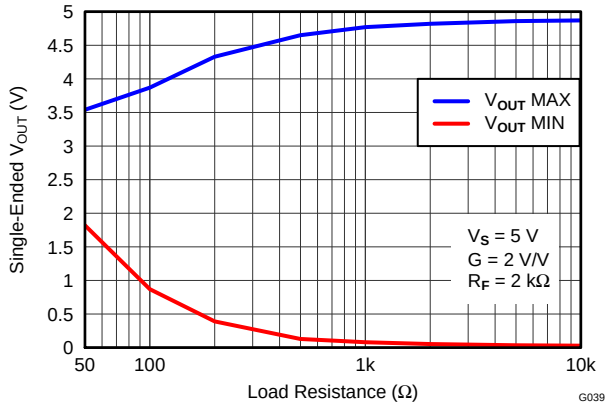

Figure 49.

SINGLE-ENDED OUTPUT SATURATION VOLTAGE vs LOAD CURRENT

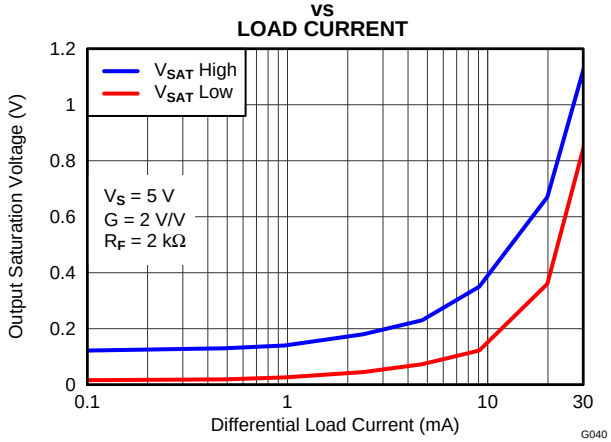

Figure 50.

MAIN AMPLIFIER DIFFERENTIAL OUTPUT IMPEDANCE vs FREQUENCY

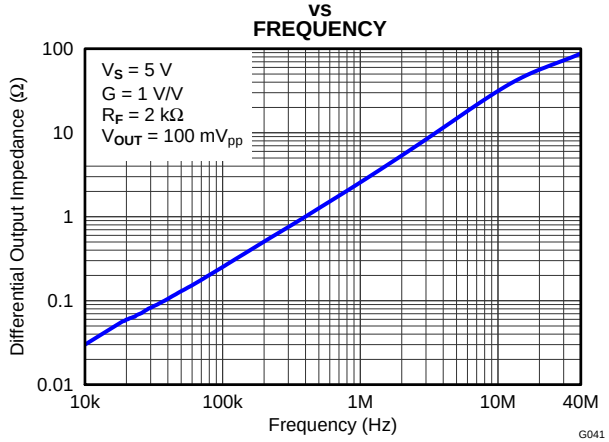

Figure 51.

FREQUENCY RESPONSE vs C_{LOAD}

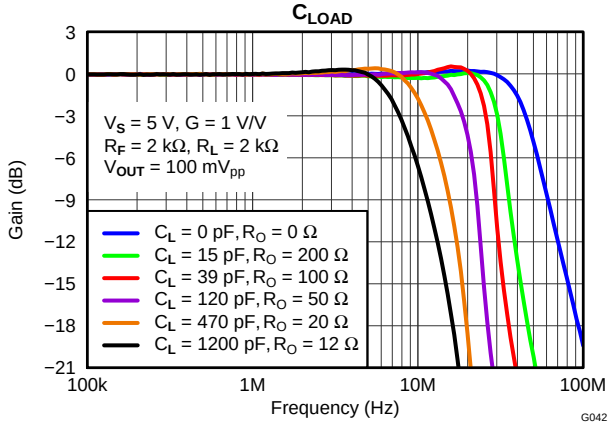

Figure 52.

R_O vs C_{LOAD}

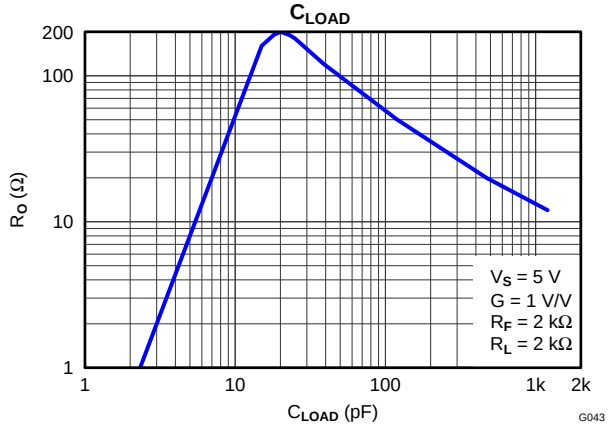

Figure 53.

TYPICAL CHARACTERISTICS: V_S = 5V (continued)

Test conditions unless otherwise noted: V_{S+} = 5 V, V_{S-} = 0V, V_{OCM} = open, V_{OUT} = 2Vpp, R_F = 2kΩ, R_L = 2kΩ Differential, G = 1V/V, Single-Ended Input, Differential Output, Input and Output Referenced to mid-supply, T_A = 25°Cunless otherwise noted.

REJECTION RATIO vs FREQUENCY

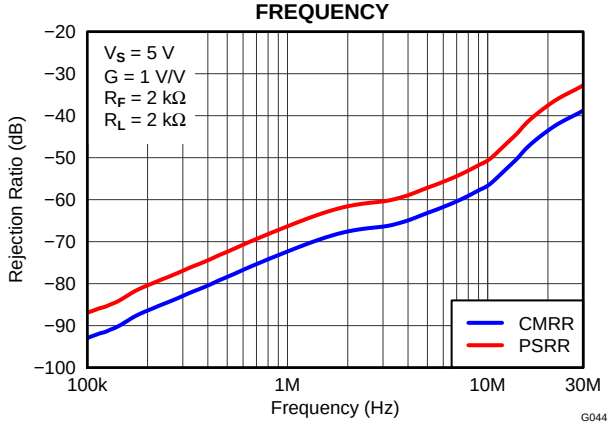

Figure 54.

CROSSTALK vs FREQUENCY

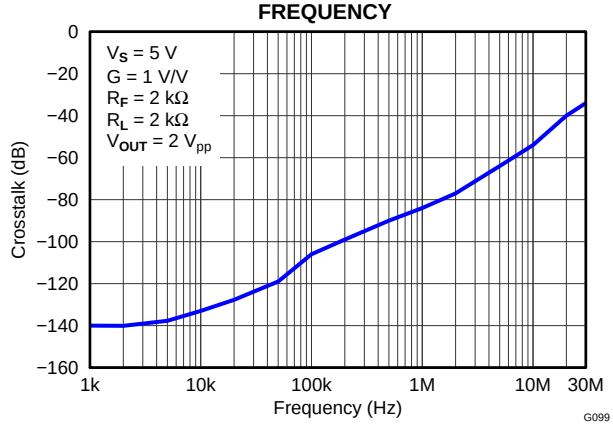

Figure 55.

TURN-ON TIME

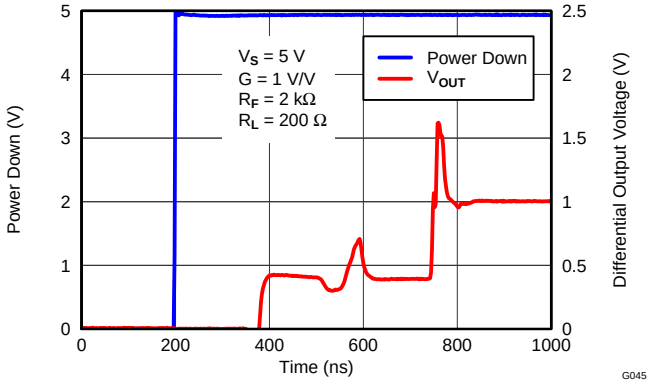

Figure 56.

TURN-OFF TIME

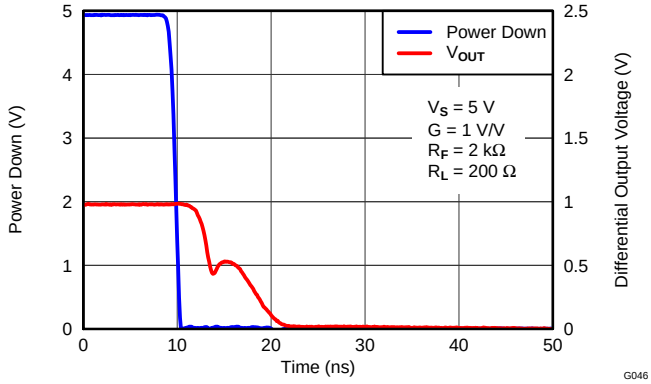

Figure 57.

INPUT-REFERRED VOLTAGE NOISE and CURRENT NOISE SPECTRAL DENSITY

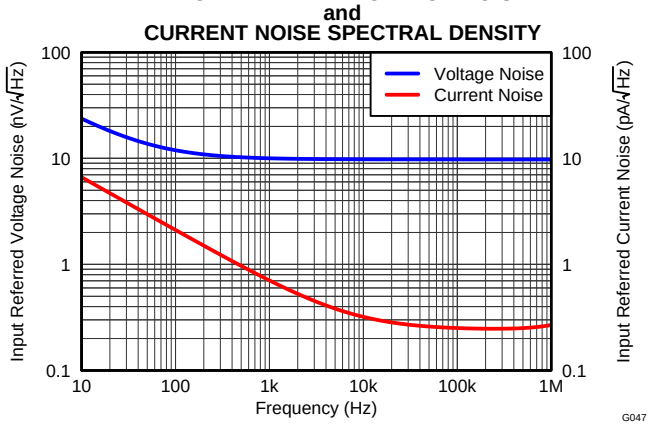

Figure 58.

MAIN AMPLIFIER DIFFERENTIAL OPEN-LOOP GAIN and PHASE vs FREQUENCY

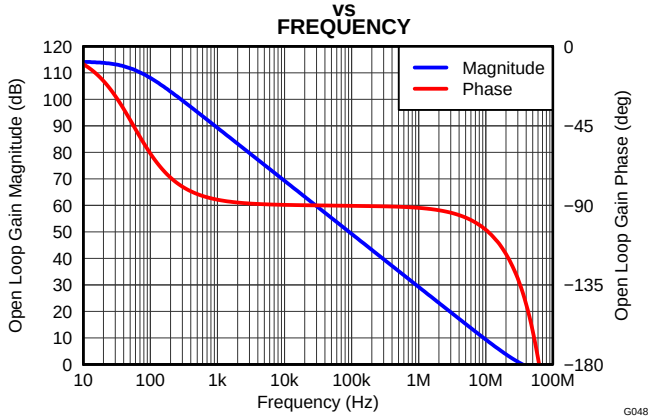

Figure 59.

Copyright © 2013, Texas Instruments Incorporated

TYPICAL CHARACTERISTICS: V_S = 5V (continued)

Test conditions unless otherwise noted: V_{S+} = 5 V, V_{S-} = 0V, V_{OCM} = open, V_{OUT} = 2Vpp, R_F = 2kΩ, R_L = 2kΩ Differential, G = 1V/V, Single-Ended Input, Differential Output, Input and Output Referenced to mid-supply, T_A = 25°Cunless otherwise noted.

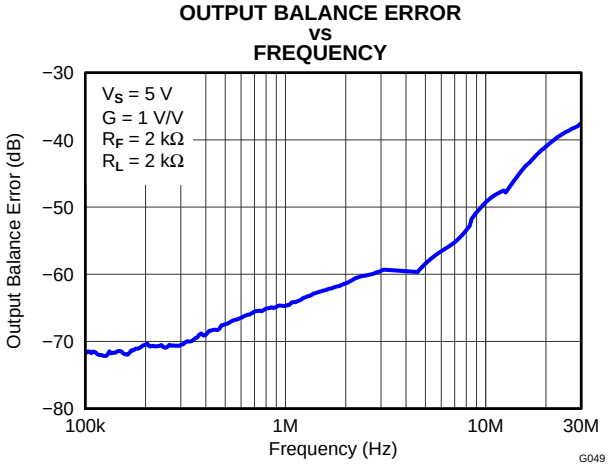

Figure 60.

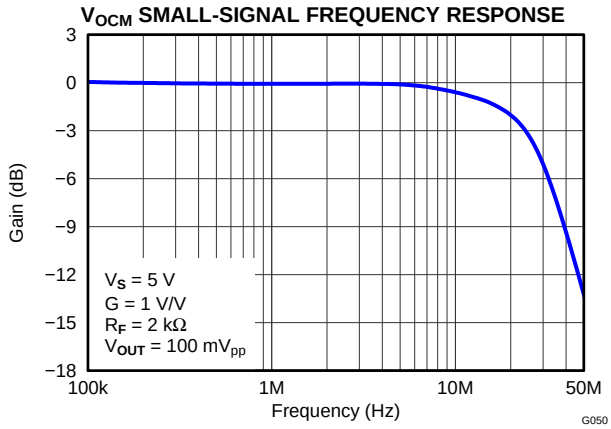

Figure 61.

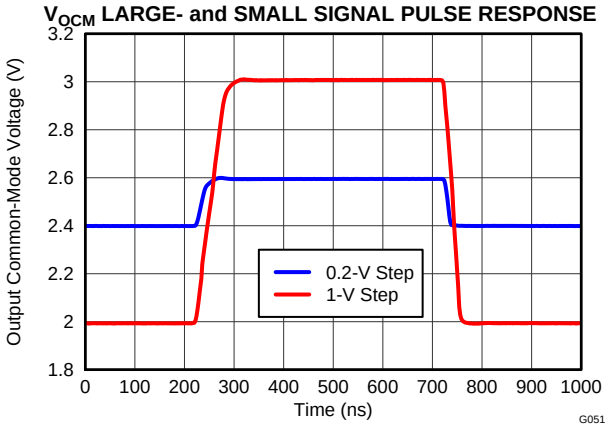

Figure 62.

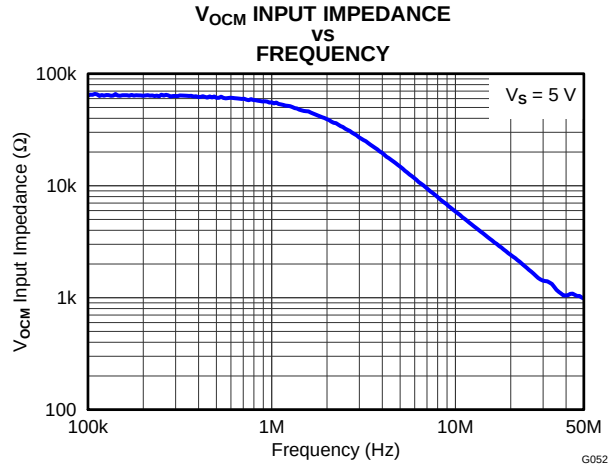

Figure 63.

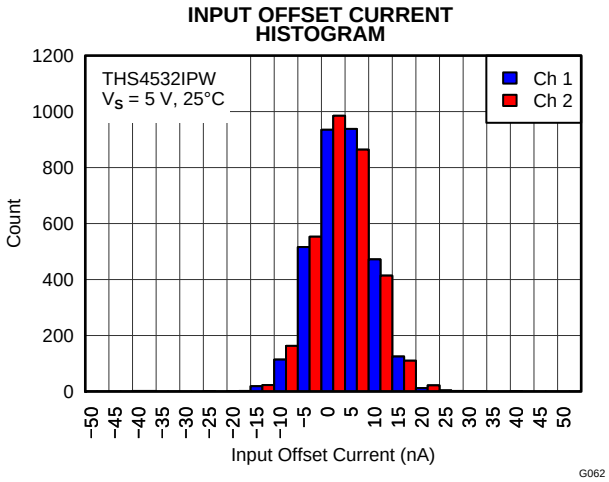

Figure 64.

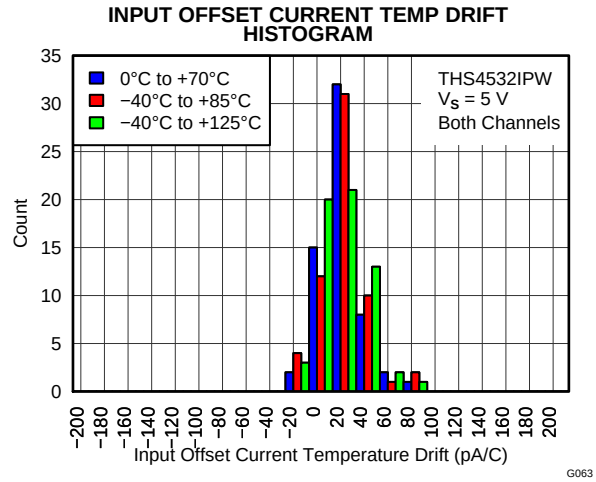

Figure 65.

TYPICAL CHARACTERISTICS: V_S = 5V (continued)

Test conditions unless otherwise noted: V_{S+} = 5 V, V_{S-} = 0V, V_{OCM} = open, V_{OUT} = 2Vpp, R_F = 2kΩ, R_L = 2kΩ Differential, G = 1V/V, Single-Ended Input, Differential Output, Input and Output Referenced to mid-supply, T_A = 25°Cunless otherwise noted.

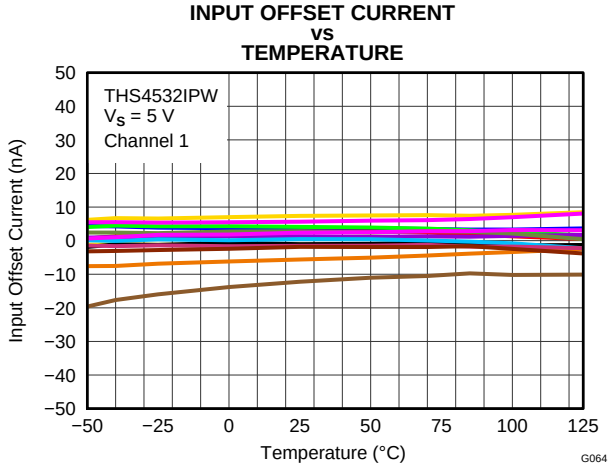

Figure 66.

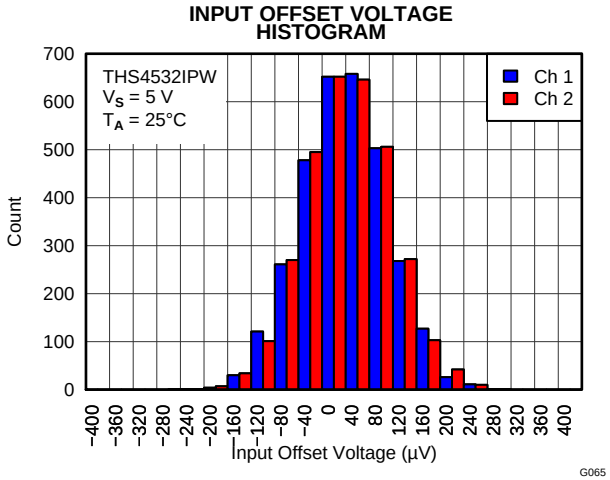

Figure 67.

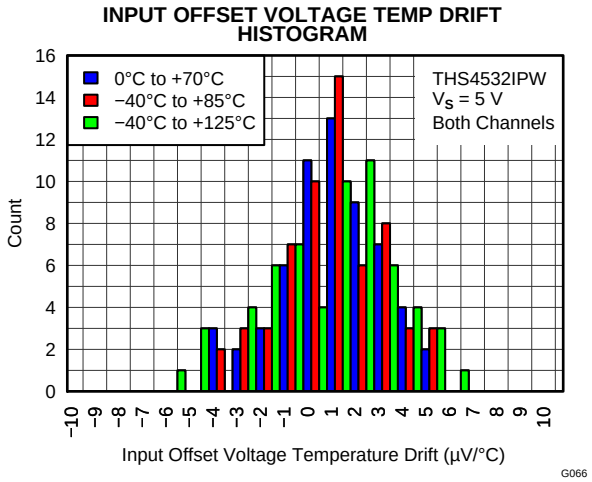

Figure 68.

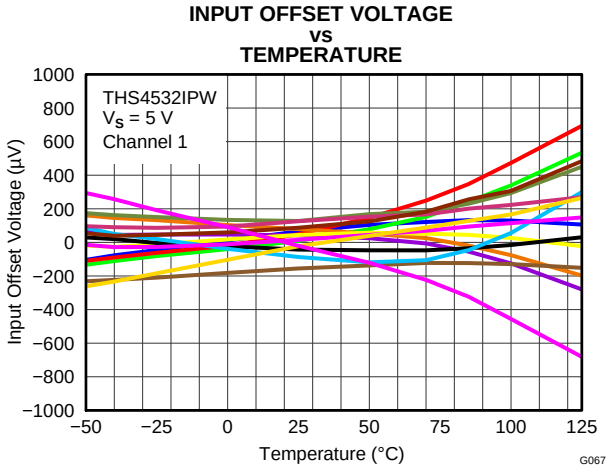

Figure 69.

Copyright © 2013, Texas Instruments Incorporated

APPLICATION INFORMATION

TYPICAL CHARACTERISTICS TEST CIRCUITS

Figure 70 shows the general test circuit built on the EVM that was used for testing the THS4532. For simplicity, power supply decoupling is not shown – please see layout in the applications section for recommendations. Depending on the test conditions, component values are changed per Table 2 and Table 3, or as otherwise noted. Some of the signal generators used are ac coupled 50Ω sources and a 0.22µF cap and 49.9Ω resistor to ground are inserted across R_{IT} on the un-driven or alternate input as shown to balance the circuit. Split-power supply is used to ease the interface to common lab test equipment, but if properly biased, the amplifier can be operated single-supply as described in the applications section with no impact on performance. For most of the tests, the devices are tested with single ended input and a transformer on the output to convert the differential output to single ended because common lab test equipment have single ended inputs and outputs. Performance is the same or better with differential input and differential output.

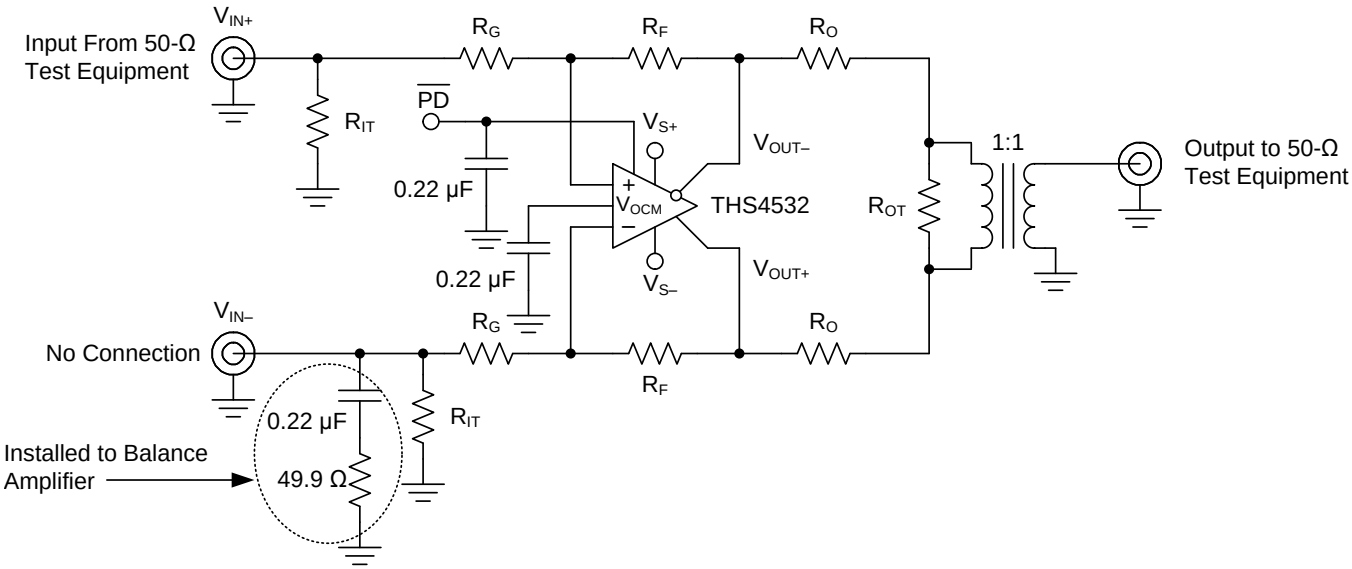

Figure 70. General Test Circuit

Table 2. Gain Component Values for Single-Ended Input(1)

GAIN	R_F	R_G	R_{IT}
1 V/V	2kΩ	2kΩ	51.1Ω
2 V/V	2kΩ	1kΩ	52.3Ω
5 V/V	2kΩ	392Ω	53.6Ω
10 V/V	2kΩ	187kΩ	57.6Ω

(1) Note components are chosen to achieve gain and 50Ω input termination. Resistor values shown are closest standard values so gains are approximate.

Table 3. Load Component Values For 1:1 Differential to Single-Ended Output Transformer(1)

R_L	R_O	R_{OT}	ATTEN
100Ω	25Ω	open	6
200Ω	86.6Ω	69.8Ω	16.8
499Ω	237Ω	56.2Ω	25.5
1kΩ	487Ω	52.3Ω	31.8
2kΩ	976Ω	51.1Ω	37.9

(1) Note the total load includes 50Ω termination by the test equipment. Components are chosen to achieve load and 50Ω line termination through a 1:1 transformer. Resistor values shown are closest standard values so loads are approximate.

Copyright © 2013, Texas Instruments Incorporated

Due to the voltage divider on the output formed by the load component values, the amplifier's output is attenuated. The column "Atten" in Table 3 shows the attenuation expected from the resistor divider. When using a transformer at the output as shown in Figure 70, the signal will see slightly more loss due to transformer and line loss, and these numbers will be approximate. The standard output load used for most tests is 2kΩ with associated 37.9dB of loss.

Frequency Response, and Output Impedance

The circuit shown in Figure 70 is used to measure the frequency response of the amplifier.

A network analyzer is used as the signal source and the measurement device. The output impedance of the network analyzer is 50Ω and is DC coupled. R_{IT} and R_G are chosen to impedance match to 50Ω and maintain the proper gain. To balance the amplifier, a 49.9Ω resistor to ground is inserted across R_{IT} on the alternate input.

The output is routed to the input of the network analyzer via 50Ω coax. For 2k load, 37.9dB is added to the measurement to refer back to the amplifier's output per Table 3.

For output impedance, the signal is injected at V_{OUT} with V_{IN} left open. The voltage drop across the 2x R_O resistors is measured with a high impedance differential probe and used to calculate the impedance seen looking into the amplifier's output.

Distortion

At 1MHz and above, the circuit shown in Figure 70 is used to measure harmonic, intermodulation distortion, and output impedance of the amplifier.

A signal generator is used as the signal source and the output is measured with a spectrum analyzer. The output impedance of the signal generator is 50Ω and is AC coupled. R_{IT} and R_G are chosen to impedance match to 50Ω and maintain the proper gain. To balance the amplifier, a 0.22µF cap and 49.9Ω resistor to ground is inserted across R_{IT} on the alternate input. A low-pass filter is inserted in series with the input to reduce harmonics generated at the signal source. The level of the fundamental is measured and then a high-pass filter is inserted at the output to reduce the fundamental so it does not generate distortion in the input of the spectrum analyzer.

Distortion in the audio band is measured using an audio analyzer. Refer to audio measurement section for detail.

Slew Rate, Transient Response, Settling Time, Overdrive, Output Voltage, and Turn-On/Off Time

The circuit shown in Figure 71 is used to measure slew rate, transient response, settling time, overdrive recovery, and output voltage swing. Turn on and turn off times are measured with 50Ω input termination on the $\overline{PD}$ input, by replacing the 0.22µF capacitor with 49.9Ω resistor.

Copyright © 2013, Texas Instruments Incorporated

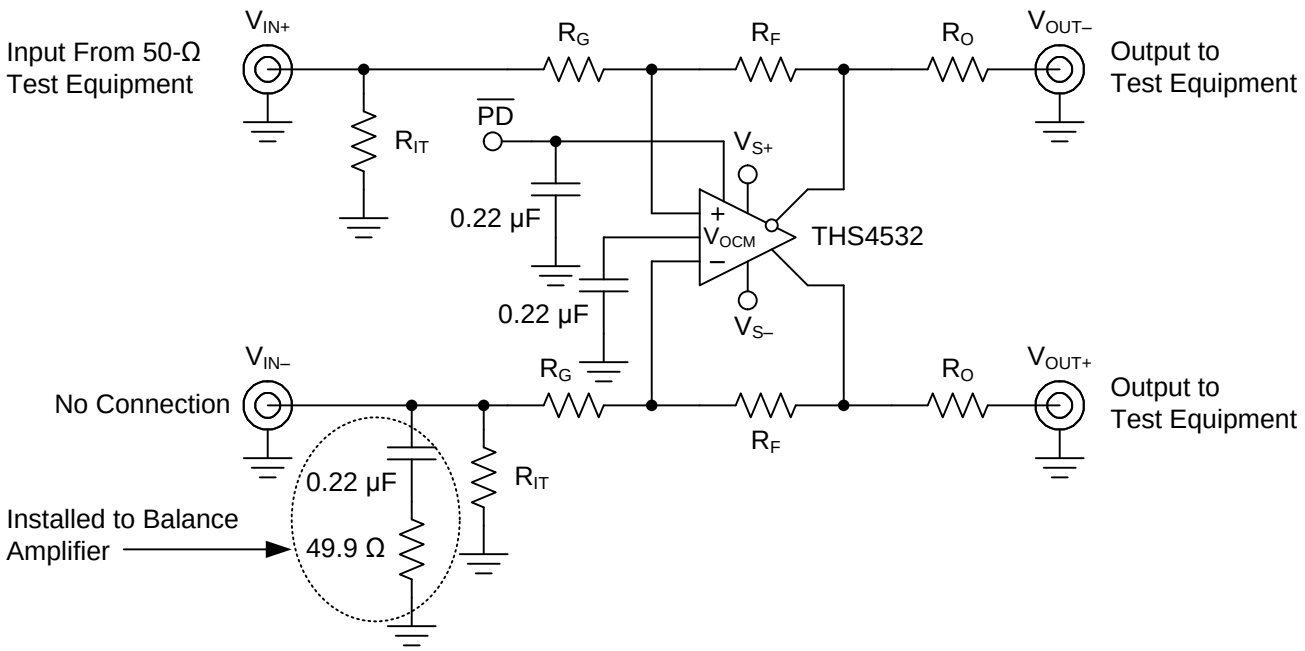

Figure 71. Slew Rate, Transient Response, Settling Time, Z_O, Overdrive Recovery, V_{OUT} Swing, and Turn-on/off Test Circuit

Common-Mode and Power Supply Rejection

The circuit shown in Figure 72 is used to measure the CMRR. The signal from the network analyzer is applied common-mode to the input.

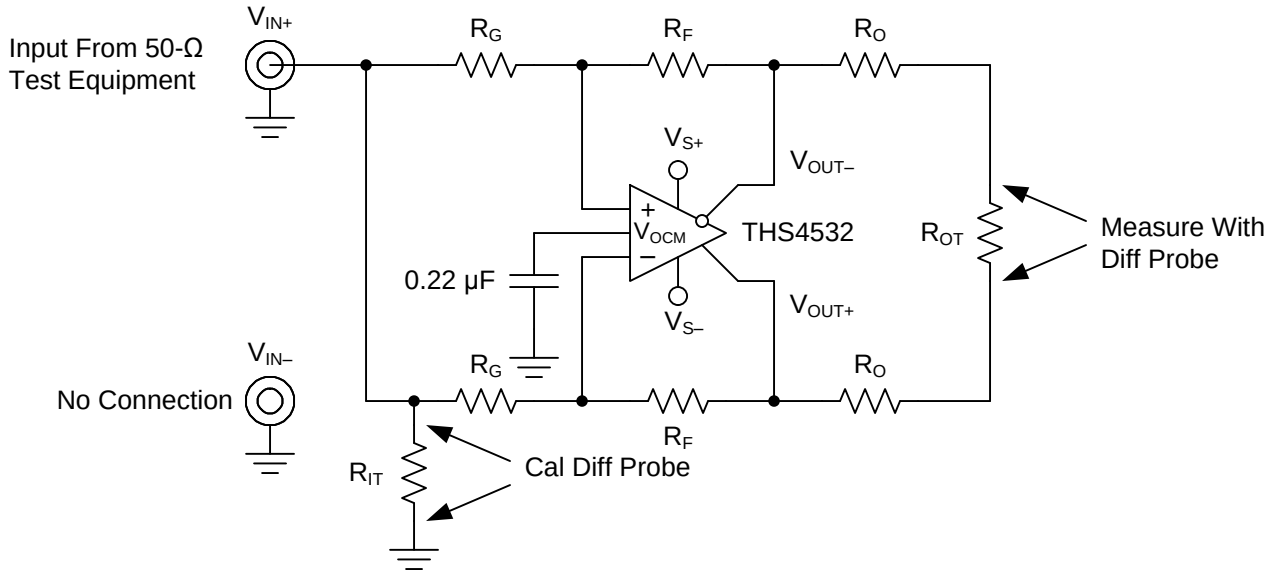

Figure 72. CMRR Test Circuit

Figure 73 is used to measure the PSRR of V_{S+} and V_{S-}. The power supply is applied to the network analyzer's DC offset input. For both CMRR and PSRR, the output is probed using a high impedance differential probe across R_{OT}.

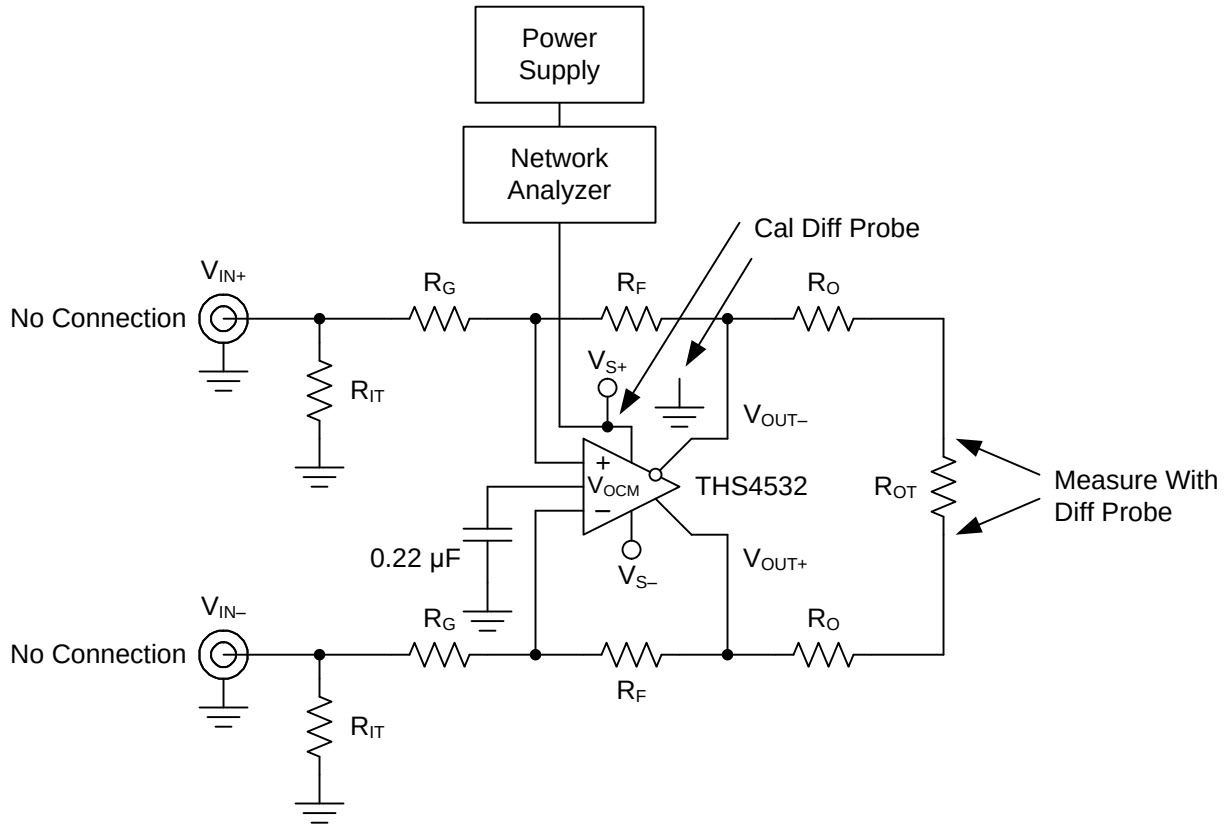

Figure 73. PSRR Test Circuit

V_{OCM} Input

The circuit shown in Figure 74 is used to measure the transient response, frequency response and input impedance of the V_{OCM} input. For these tests, the cal point is across the 49.9Ω V_{OCM} termination resistor. Transient response and frequency response are measured with R_{CM} = 0Ω and using a high impedance differential probe at the summing junction of the two R_O resistors, with respect to ground. The input impedance is measured using a high impedance differential probe at the V_{OCM} pin and the drop across R_{CM} is used to calculate the impedance seen looking into the amplifier's V_{OCM} input.

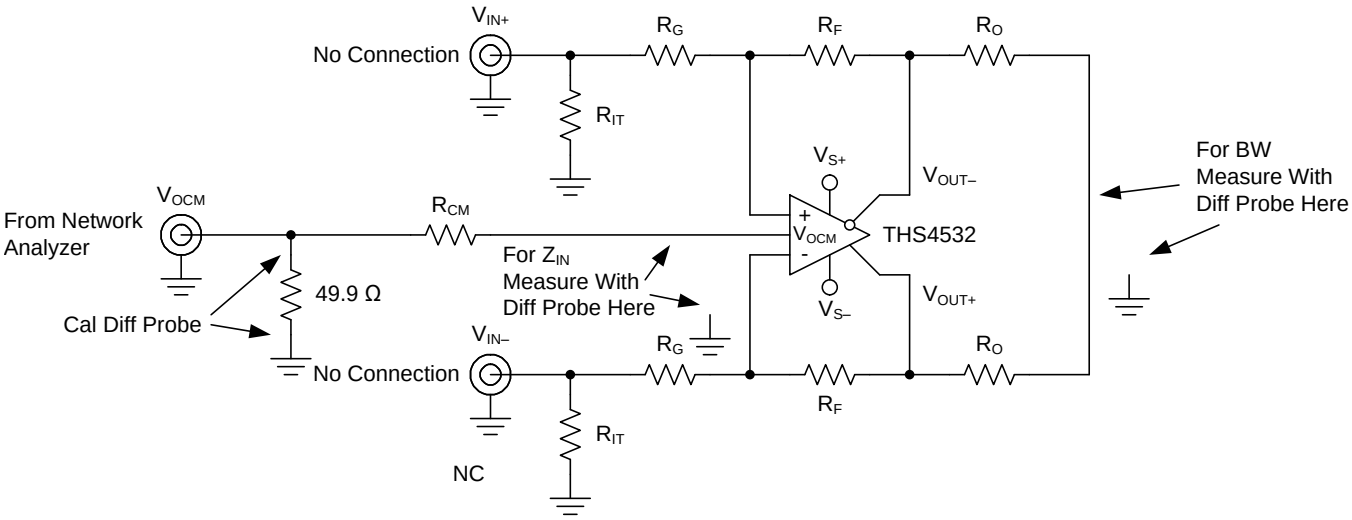

Figure 74. V_{OCM} Input Test Circuit

Copyright © 2013, Texas Instruments Incorporated

Balance Error

The circuit shown in Figure 75 is used to measure the balance error of the main differential amplifier. A network analyzer is used as the signal source and the measurement device. The output impedance of the network analyzer is 50Ω and is DC coupled. R_{IT} and R_G are chosen to impedance match to 50Ω and maintain the proper gain. To balance the amplifier, a 49.9Ω resistor to ground is inserted across R_{IT} on the alternate input. The output is measured using a high impedance differential probe at the summing junction of the two R_O resistors, with respect to ground.

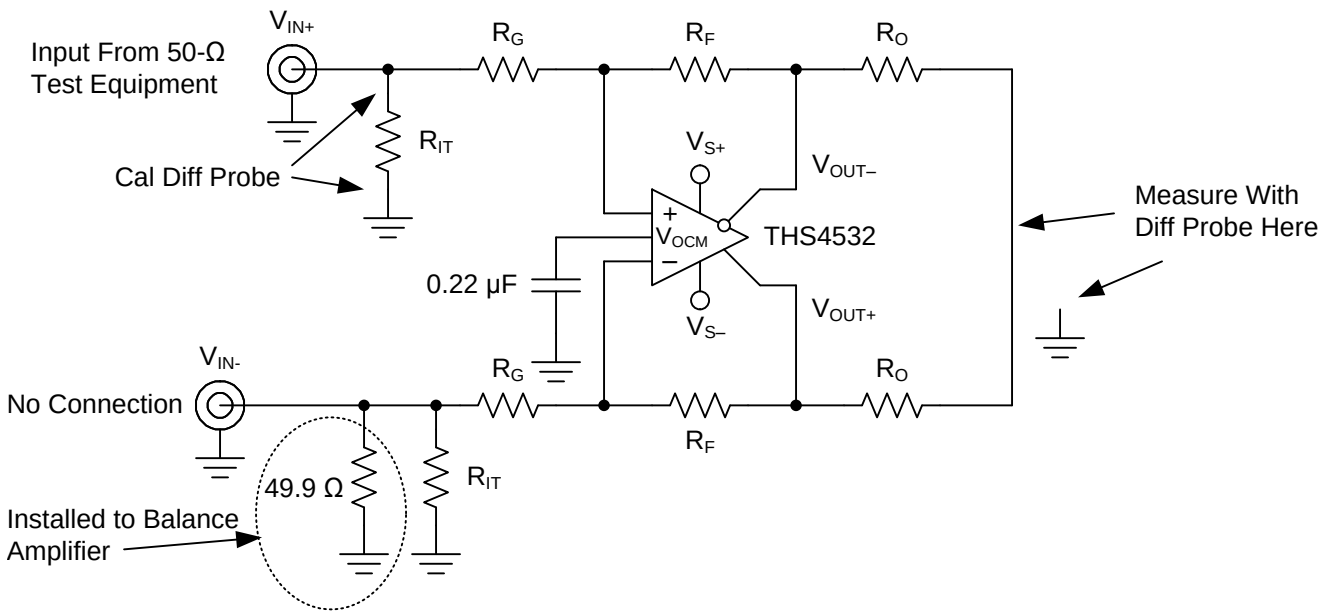

Figure 75. Balance Error Test Circuit

APPLICATION CIRCUITS

The following circuits show application information for the THS4532. For simplicity, power supply decoupling capacitors are not shown in these diagrams – see the EVM and Layout Recommendations section for recommendations. For more detail on the use and operation of fully differential op amps, see the application report "Fully-Differential Amplifiers" SLOA054D.

Differential Input to Differential Output Amplifier

The THS4532 is a fully differential op amp and can be used to amplify differential input signals to differential output signals. A basic block diagram of the circuit is shown in Figure 76 (V_{OCM} and $\overline{PD}$ inputs not shown). The gain of the circuit is set by R_F divided by R_G.

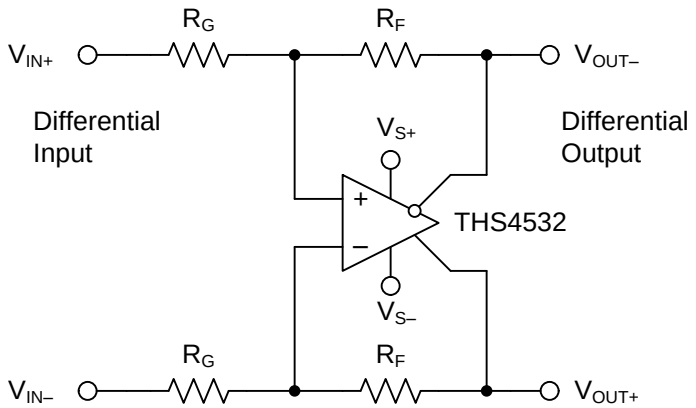

Figure 76. Differential Input to Differential Output Amplifier

Single-Ended Input to Differential Output Amplifier

The THS4532 can also be used to amplify and convert single-ended input signals to differential output signals. A basic block diagram of the circuit is shown in Figure 77 (V_{OCM} and $\overline{PD}$ inputs not shown). The gain of the circuit is again set by R_F divided by R_G.

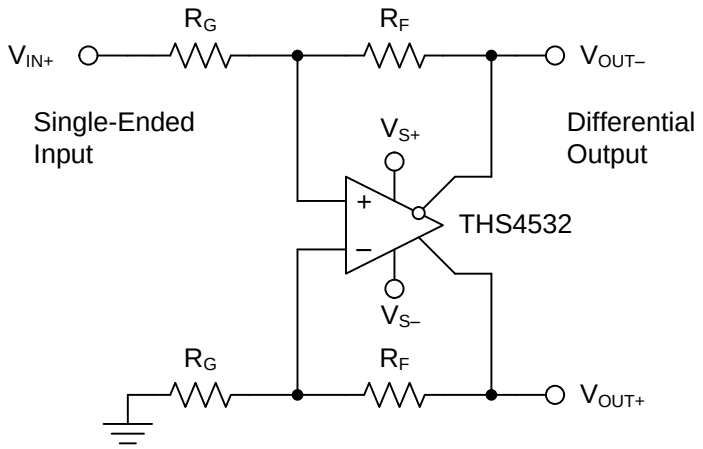

Figure 77. Single-Ended Input to Differential Output Amplifier

Differential Input to Single-Ended Output Amplifier

Fully differential op amps like the THS4532 are not recommended for differential to single-ended conversion. This application is best performed with an instrumentation amplifier or with a standard op amp configured as a classic differential amplifier. See application section of the OPA835 data sheet (SLOS713).

Copyright © 2013, Texas Instruments Incorporated

Input Common-Mode Voltage Range

The input common-model voltage of a fully differential op amp is the voltage at the "+ and –" input pins of the op amp.

It is important to not violate the input common-mode voltage range (V_{ICR}) of the op amp. Assuming the op amp is in linear operation the voltage across the input pins is only a few millivolts at most. So finding the voltage at one input pin will determine the input common-mode voltage of the op amp.

Treating the negative input as a summing node, the voltage is given by:

$$\left(V_{OUT+} \times \frac{R_G}{R_G + R_F}\right) + \left(V_{IN-} \times \frac{R_F}{R_G + R_F}\right) \tag{1}$$

To determine the V_{ICR} of the op amp, the voltage at the negative input is evaluated at the extremes of V_{OUT+}.

As the gain of the op amp increases, the input common-mode voltage becomes closer and closer to the input common-mode voltage of the source.

Setting the Output Common-Mode Voltage

The output common-model voltage is set by the voltage at the V_{OCM} pin and the internal circuit works to maintain the output common-mode voltage as close as possible to this voltage. If left unconnected, the output common-mode is set to mid-supply by internal circuitry, which may be over-driven from an external source. Figure 78 is representative of the V_{OCM} input. The internal V_{OCM} circuit has about 24MHz of -3dB bandwidth, which is required for best performance, but it is intended to be a DC bias input pin. Bypass capacitors are recommended on this pin to reduce noise. The external current required to overdrive the internal resistor divider is given approximately by the formula:

$$I_{EXT} = \frac{2V_{OCM} - (V_{S+} - V_{S-})}{60k\Omega} \tag{2}$$

where V_{OCM} is the voltage applied to the V_{OCM} pin.

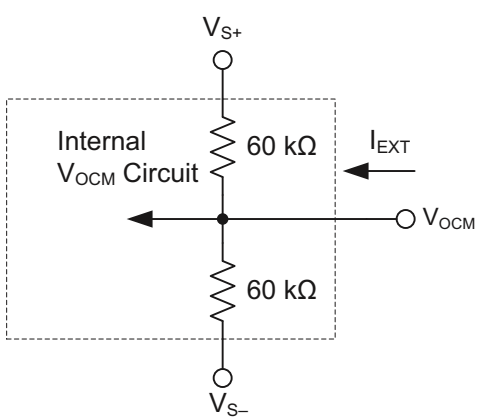

Figure 78. Simplified V_{OCM} Input Circuit

Power Down

The power down pin is internally connected to a CMOS stage which must be driven to a minimum of 2.1V to ensure proper high logic.

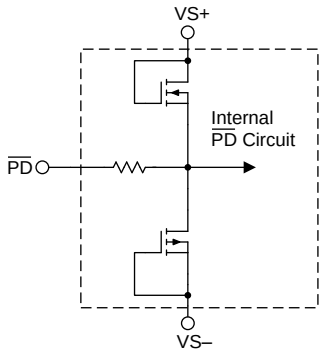

Figure 79. Simplified Power Down Internal Circuit

If 1.8V logic is used to drive the pin, a shoot through current of up to 100µA may develop in the digital logic causing the overall quiescent current to exceed the 2uA of maximum disabled quiescent current specified in the electrical characteristics.

In order to properly interface to 1.8V logic with minimal increase in additional current draw, a logic-level translator like the SN74AVC1T45 can be used.

Alternatively, the same function may be achieved using a diode and pull up resistor shown below.

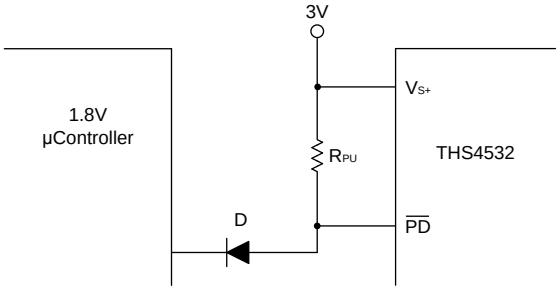

Figure 80. THS4532 Power Down Interface to 1.8V Logic Microcontroller

The voltage seen at the power down pin will be a function of the supply voltage, input logic level, and diode drop. As long as the diode is forward biased, the power down voltage will be determined by:

$$V_{PD} = V_L + V_f \tag{3}$$

Where VL is the logic level voltage and Vf is the forward voltage drop across the diode.

This means for 1.8V logic, the forward voltage of the diode should be greater than 0.3V but less than 0.7V in order to keep the power down logic level above 2.1V and less than 0.7V respectively.

For example, if we select 1N914 as the diode with a forward voltage of approximately 0.4V, the translated logic voltages will be 0.4V for disabled operation and 2.2V for enabled operation.

The additional current draw can be determined by:

$$i_{PD} = \frac{V_{CC} - (V_L + V_f)}{R_{PU}} \tag{4}$$

This equation shows that larger values of RPU result in a smaller additional current. A reasonable value of RPU may be 500kΩ where we can expect to see an additional current draw of 5.2µA while the device is in operation and 1.6µA when disabled.

Copyright © 2013, Texas Instruments Incorporated

Single-Supply Operation

To facilitate testing with common lab equipment, the THS4532 EVM is built to allow for split-supply operation and most of the data presented in this data sheet was taken with split-supply power inputs. But the device is designed for use with single-supply power operation and can easily be used with single-supply power without degrading the performance. The only requirement is to bias the device properly and the specifications in this data sheet are given for single supply operation.

Low Power Applications and the Effects of Resistor Values on Bandwidth

The THS4532 is designed for the nominal value of R_F to be 2 kΩ. This gives excellent distortion performance, maximum bandwidth, best flatness, and best pulse response. It also loads the amplifier. For example; in gain of 1 with $R_F = R_G = 2$ kΩ, R_G to ground, and $V_{OUT+} = 4V$, 1mA of current will flow through the feedback path to ground. In low power applications, it is desirable to reduce this current by increasing the gain setting resistors values. Using larger value gain resistors has two primary side effects (other than lower power) due to their interaction with the device and PCB parasitic capacitance:

1. Lowers the bandwidth.
2. Lowers the phase margin
   (a) This will cause peaking in the frequency response.
   (b) And will cause over shoot and ringing in the pulse response.

Figure 81 shows the small signal frequency response for gain of 1 with R_F and R_G equal to 2kΩ, 10kΩ, and 100kΩ. The test was done with R_L = 2kΩ. Due to loading effects of R_L, lower values may reduce the peaking, but higher values will not have a significant effect.

As expected, larger value gain resistors cause lower bandwidth and peaking in the response (peaking in frequency response is synonymous with overshoot and ringing in pulse response).

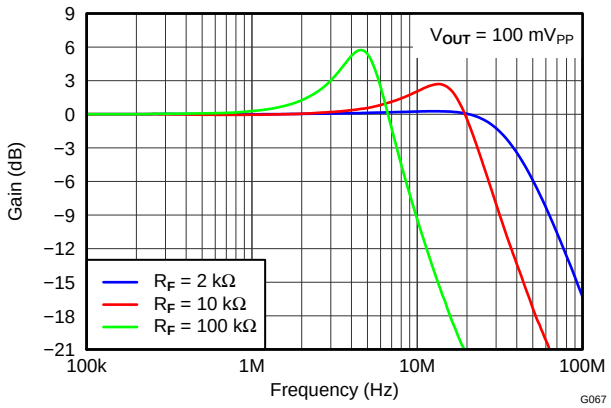

Figure 81. THS4532 Frequency Response with Various Gain Setting Resistor Values

Driving Capacitive Loads

The THS4532 is designed for a nominal capacitive load of 2pF (differentially). When driving capacitive loads greater than this, it is recommended to use small resisters (R_O) in series with the output as close to the device as possible. Without R_O, capacitance on the output will interact with the output impedance of the amplifier causing phase shift in the loop gain of the amplifier that will reduce the phase margin resulting in:

1. Peaking in the frequency response.

2. Overshoot, undershoot, and ringing in the time domain response with a pulse or square-wave signal.

3. May lead to instability or oscillation.

Inserting R_O will compensate the phase shift and restore the phase margin, but it will also limit bandwidth. The circuit shown in Figure 71 is used to test for best R_O versus capacitive loads, C_L, with a capacitance placed differential across the V_{OUT+} and V_{OUT-} along with 2kΩ load resistor, and the output is measure with a differential probe. Figure 82 shows the optimum values of R_O versus capacitive loads, C_L, and Figure 83 shows the frequency response with various values. Performance is the same on both 2.7V and 5V supply.

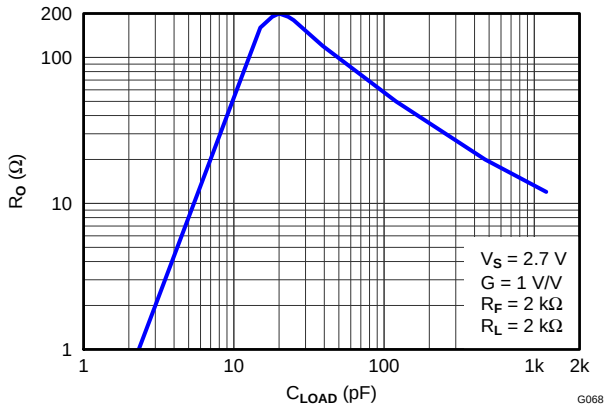

Figure 82. Recommended Series Output Resistor vs Capacitive Load for Flat Frequency Response

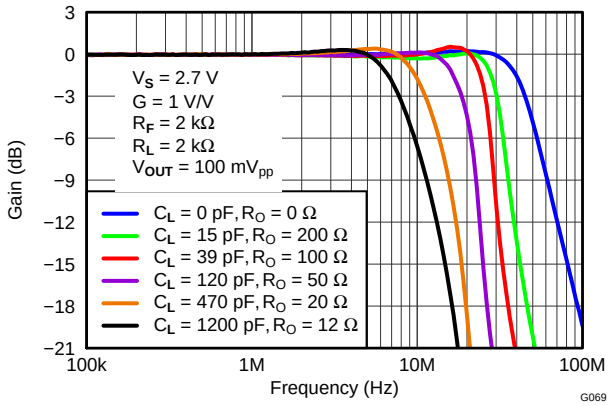

Figure 83. Frequency Response for Various R_O and C_L Values

Audio Performance

The THS4532 provides excellent audio performance with very low quiescent power. To show performance in the audio band, the device was tested with an audio analyzer. THD+N and FFT tests were run at 1Vrms output voltage. Performance is the same on both 2.7V and 5V supply. Figure 84 is the test circuit used, and Figure 85 and Figure 86 show performance of the analyzer. In the FFT plot the harmonic spurs are at the testing limit of the analyzer, which means the THS4532 is actually much better than can be directly measured. Because the THS4532 distortion performance cannot be directly measured in the audio band it is estimated from measurement in high noise gain configuration correlated with simulation.

Copyright © 2013, Texas Instruments Incorporated

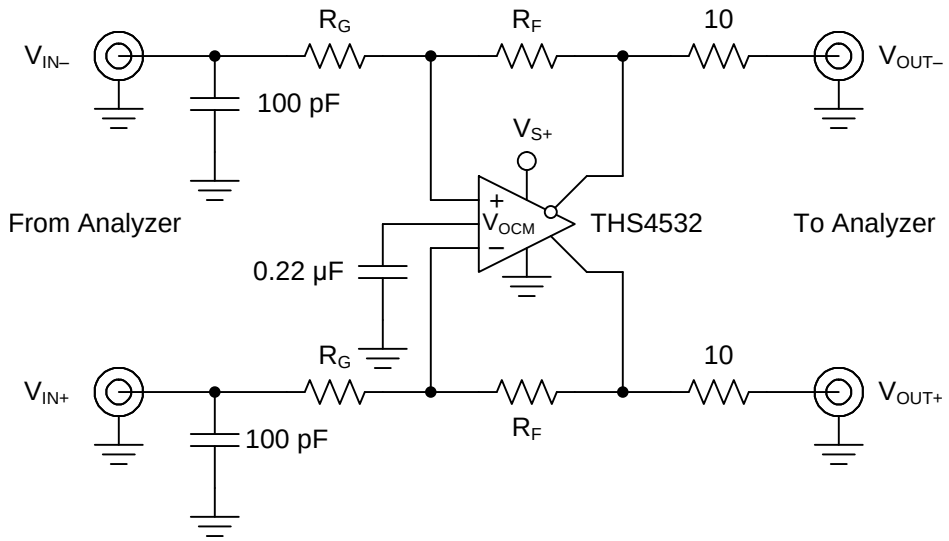

Figure 84. THS4532 Audio Analyzer Test Circuit

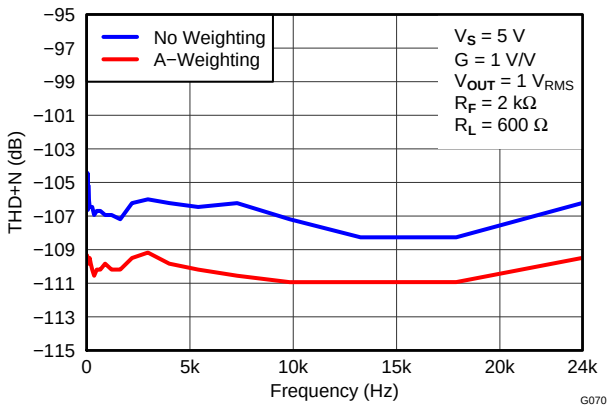

Figure 85. THD+N on Audio Analyzer, 10 Hz to 24 kHz

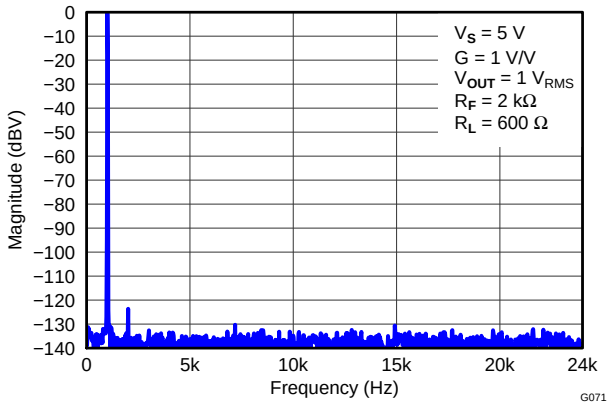

Figure 86. 1kHz FFT Plot on Audio Analyzer

Audio On/Off Pop Performance

The THS4532 is tested to show on and off pop performance by connecting a speaker between the differential outputs and switching on and off the power supply, and also by using the power down function of the THS4532. Testing was done with and without tones. During these tests no audible pop could be heard.

With no input tone, Figure 87 shows the voltage waveforms when switching power on to the THS4532 and Figure 88 shows voltage waveforms when turning power off. The transients during power on and off show no audible pop should be heard.

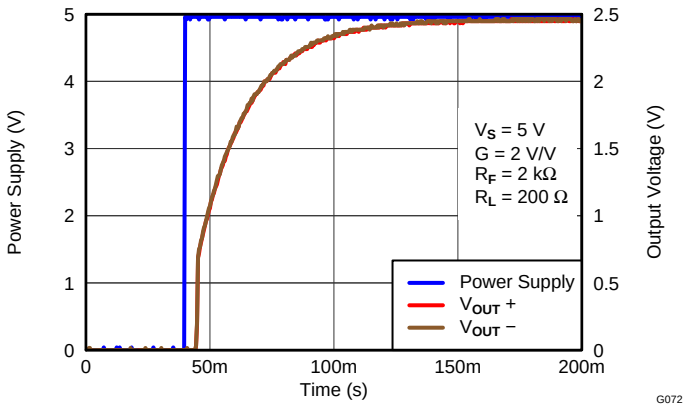

Figure 87. Power Supply Turn On Pop Performance

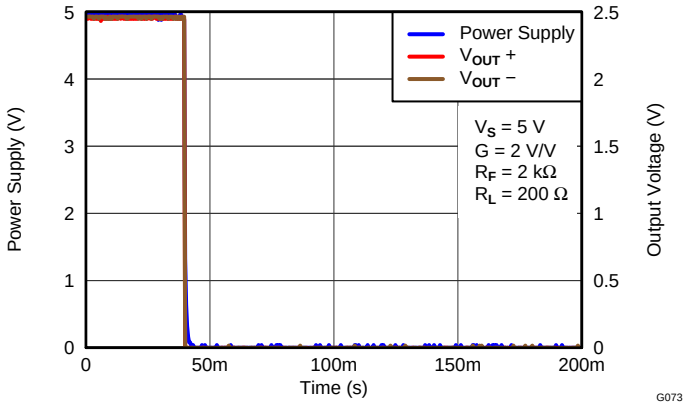

Figure 88. Power Supply Turn Off Pop Performance

With no input tone, Figure 89 shows the voltage waveforms using the $\overline{PD}$ pin to enable and disable the THS4532. The transients during power on and off show no audible pop should be heard.

Copyright © 2013, Texas Instruments Incorporated

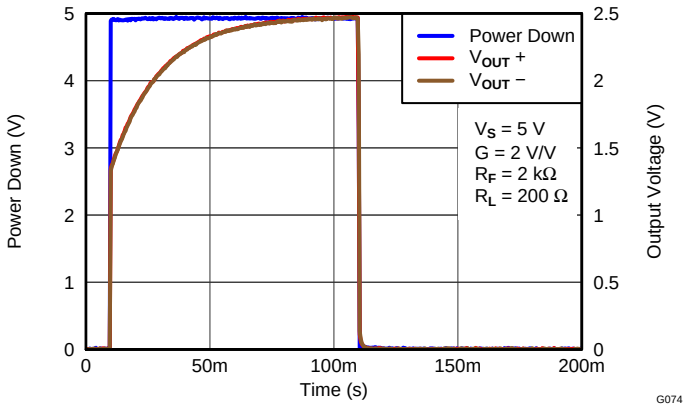

Figure 89. $\overline{PD}$ Enable Pop Performance

AUDIO ADC DRIVER PERFORMANCE: THS4532 AND PCM4204 COMBINED PERFORMANCE

To show achievable performance with a high performance audio ADC, the THS4532 is tested as the drive amplifier for the PCM4204. The PCM4204 is a high-performance, four-channel analog-to-digital (A/D) converter designed for professional and broadcast audio applications. The PCM4204 architecture utilizes a 1-bit delta-sigma modulator per channel incorporating an advanced dither scheme for improved dynamic performance, and supports PCM output data. The PCM4204 provides flexible serial port interface and many other advanced features. Please refer to its data sheet for more information.

The PCM4204 EVM is used to test the audio performance of the THS4532 as a drive amplifier. The standard PCM4204 EVM is provided with 4x OPA1632 fully differential amplifiers, which use the same pin out as the THS4532. For testing, one of these amplifiers is replaced with a THS4532 device in same package (MSOP), gain changed to 1V/V, and power supply changed to single supply +5V. Figure 90 shows the circuit. With single supply +5V supply the output common-mode of the THS4532 defaults to +2.5V as required at the input of the PCM4204. So the resistor connecting the V_{OCM} input of the THS4532 to the input common-mode drive from the PCM4204 is optional and no performance change was noted with it connected or removed. The EVM power connections were modified by connecting positive supply inputs, +15V, +5VA and +5VD, to a +5V external power supply (EXT +3.3 was not used) and connecting -15V and all ground inputs to ground on the external power supply so only one external +5V supply was needed to power all devices on the EVM.

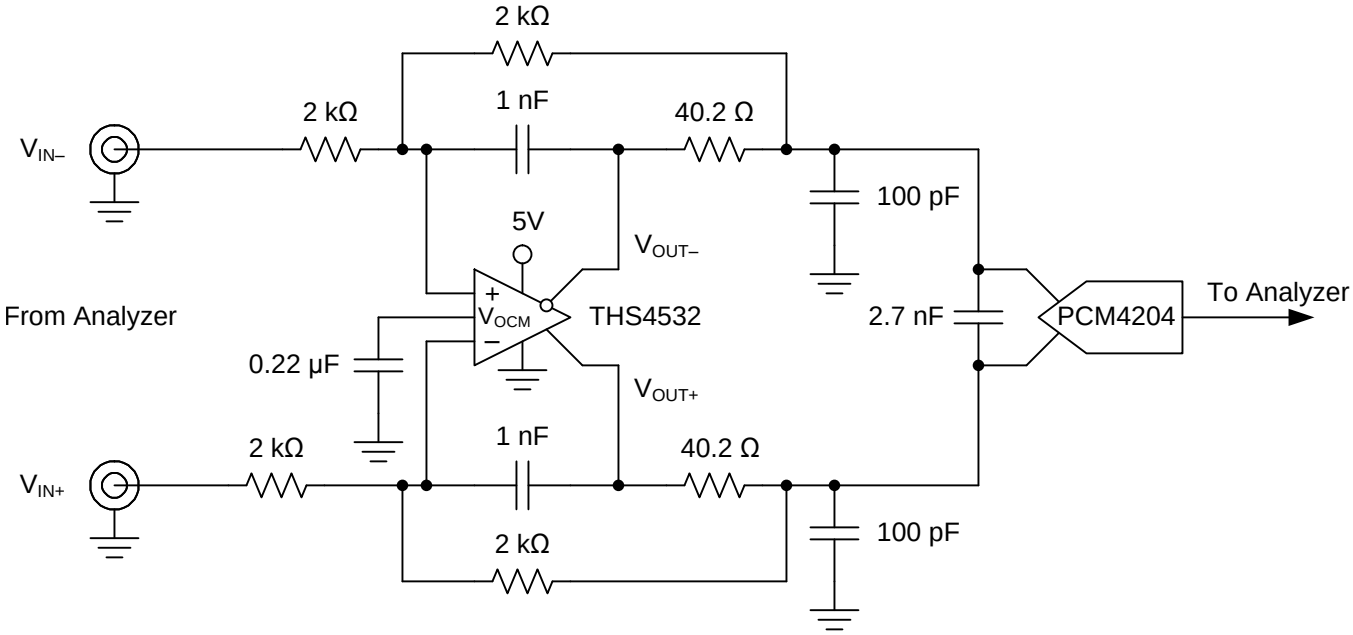

Figure 90. THS4532 and PCM4204 Test Circuit

An audio analyzer is used to provide an analog audio input to the EVM and the PCM formatted digital output is read by the digital input on the analyzer. Data was taken at f_S = 96kHz, and audio output uses PCM format. Other data rates and formats are expected to show similar performance in line with that shown in the data sheet.

Figure 91 shows the THD+N vs Frequency with no weighting and Figure 92 shows an FFT with 1kHz input tone. Input signal to the PCM4204 for these tests is -0.5dBFS. Table 4 summarizes results of testing using the THS4532 + PCM4204 versus typical Data Sheet performance, and show it make an excellent drive amplifier for this ADC.

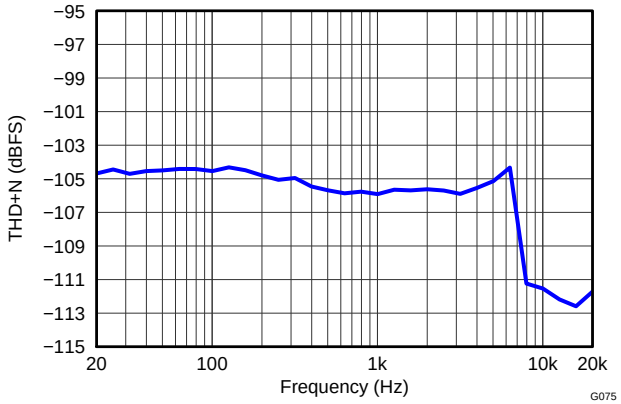

Figure 91. THS4532 + PCM4204 THD+N vs Frequency with No Weighting

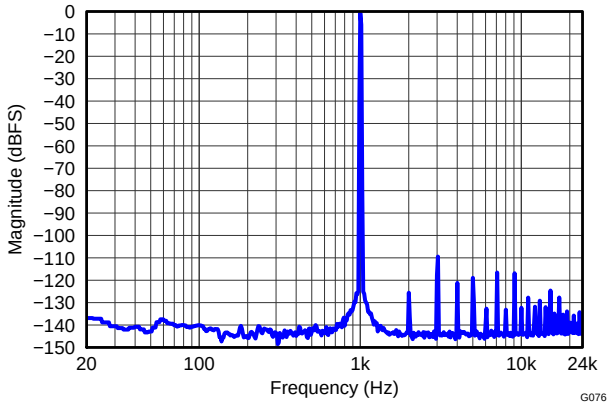

Figure 92. THS4532 + PCM4204 1kHz FFT

Table 4. 1kHz AC Analysis: Test Circuit versus PCM4204 Data Sheet Typical Specifications (f_S = 96kSPS)

CONFIGURATION	TONE	THD + N
THS4532 + PCM4204	1kHz	-106 dB
PCM4204 Data Sheet (typ)	1kHz	-103 dB

SAR ADC PERFORMANCE

THS4532 and ADS8321 Combined Performance

To show achievable performance with a high performance SAR ADC, the THS4532 is tested as the drive amplifier for the ADS8321. The ADS8321 is a 16-bit, SAR ADC that offers excellent AC and DC performance, with ultra-low power and small size. The circuit shown in Figure 93 is used to test the performance. Data was taken using the ADS8321 at 100kSPS with input frequency of 10 kHz and signal levels 0.5 dB below full scale. The FFT plot of the spectral performance is in Figure 94. A summary of the FFT analysis results are in Table 5 along with ADS8321 typical data sheet performance at f_S = 100kSPS. Please refer to its data sheet for more information.

Copyright © 2013, Texas Instruments Incorporated

The standard ADS8321 EVM and THS4532 EVM are modified to implement the schematic in Figure 93 and used to test the performance of the THS4532 as a drive amplifier. With single supply +5V supply the output common-mode of the THS4532 defaults to +2.5V as required at the input of the ADS8321 so the V_{OCM} input of the THS4532 simply bypassed to GND with 0.22µF capacitor. The summary of results of the FFT analysis versus typical data sheet performance shown in Table 5 show the THS4532 will make an excellent drive amplifier for this ADC.

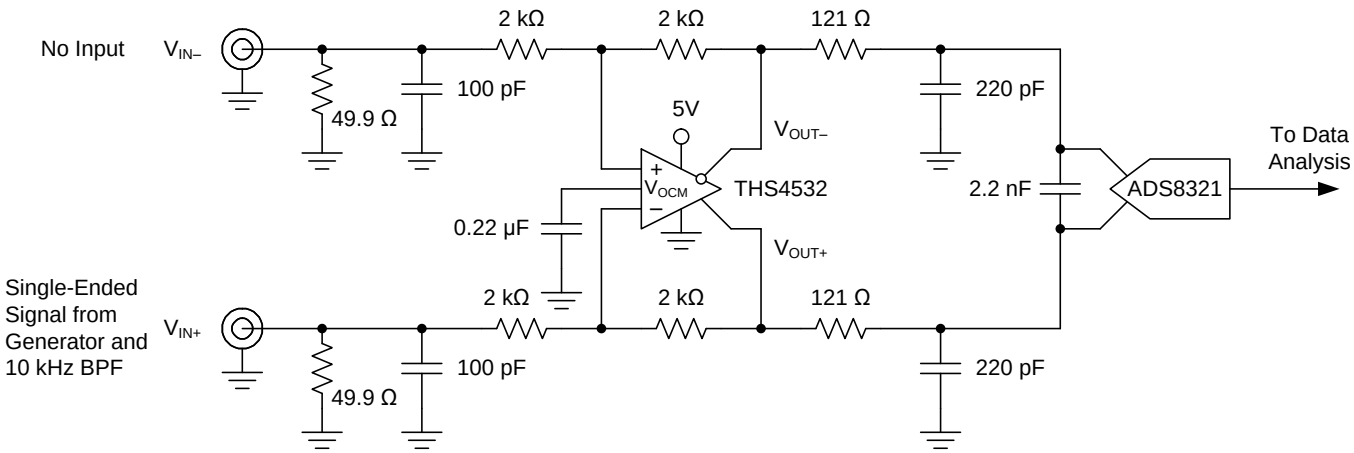

Figure 93. THS4532 and ADS8321 Test Circuit

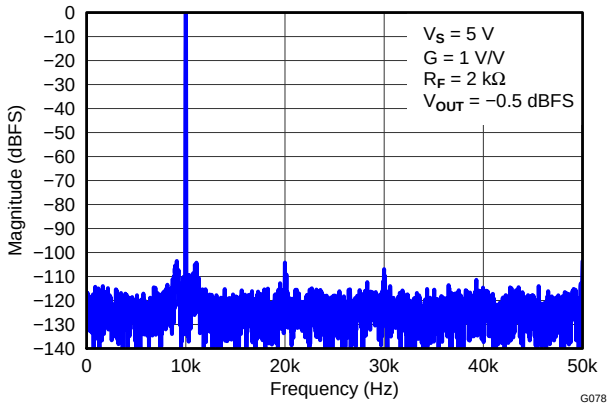

Figure 94. THS4532 + ADS8321 1kHz FFT

Table 5. 10kHz FFT Analysis Summary

CONFIGURATION	TONE	SIGNAL	SNR	THD	SINAD	SFDR
THS4532 + ADS8321	10kHz	-0.5 dBFS	87 dBc	-96 dBc	87 dBc	100 dBc
ADS8321 Data Sheet (typ)	10kHz	-0.5 dBFS	87 dBc	-86 dBc	84 dBc	86 dBc

THS4532 and ADS7945 Combined Performance

To show achievable performance with a high performance SAR ADC, the THS4532 is tested as the drive amplifier for the ADS7945. The ADS7945 is a 14-bit, SAR ADC that offers excellent AC and DC performance, with low power and small size. The circuit shown in Figure 95 is used to test the performance. Data was taken using the ADS7945 at 2MSPS with input frequency of 10 kHz and signal level 0.5 dB below full scale. The FFT plot of the spectral performance is in Figure 96. A summary of the FFT analysis results are in Table 6 along with ADS7945 typical data sheet performance at f_S = 2MSPS. Please refer to its data sheet for more information.

The standard ADS7945 EVM and THS4532 EVM are modified to implement the schematic in Figure 95 and used to test the performance of the THS4532 as a drive amplifier. With single supply +5V supply the output common-mode of the THS4532 defaults to +2.5V as required at the input of the ADS7945 so the V_{OCM} input of the THS4532 simply bypassed to GND with 0.22µF capacitor. The summary of results of the FFT analysis versus typical data sheet performance shown in Table 6 show the THS4532 will make an excellent drive amplifier for this ADC.

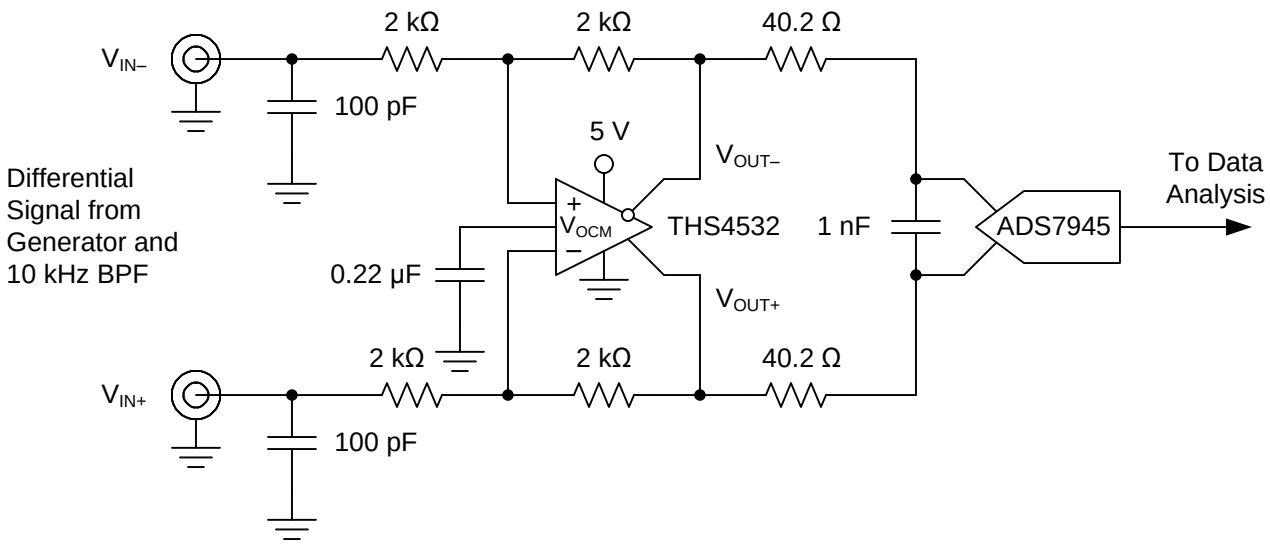

Figure 95. THS4532 and ADS7945 Test Circuit

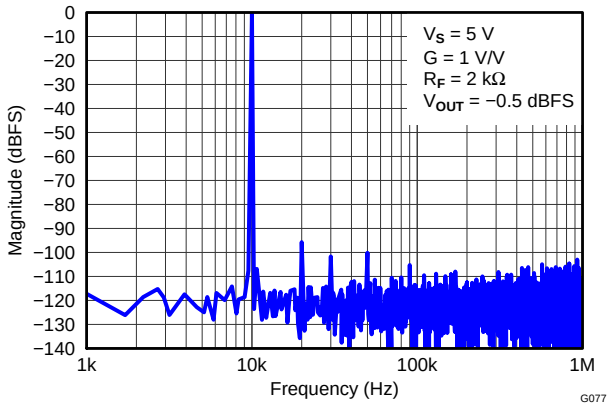

Figure 96. THS4532 and ADS7945 Test Circuit

Table 6. 10kHz FFT Analysis Summary

CONFIGURATION	TONE	SIGNAL	SNR	THD	SFDR
THS4532 + ADS7945	10kHz	-0.5 dBFS	83 dBc	-93 dBc	96 dBc
ADS7945 Data Sheet (typ)	10kHz	-0.5 dBFS	84 dBc	-92 dBc	94 dBc

Copyright © 2013, Texas Instruments Incorporated

EVM AND LAYOUT RECOMMENDATIONS

The THS4532 EVM (SLOU358) should be used as a reference when designing the circuit board. It is recommended to follow the EVM layout of the external components near to the amplifier, ground plane construction, and power routing as closely as possible. General guidelines are:

1. Signal routing should be direct and as short as possible into and out of the op amp.
2. The feedback path should be short and direct avoiding vias if possible.
3. Ground or power planes should be removed from directly under the amplifier's input and output pins.
4. A series output resistor is recommended to be placed as near to the output pin as possible. See Figure 82 "Recommended Series Output Resistor vs. Capacitive Load" for recommended values given expected capacitive load of design.
5. A 2.2µF power supply decoupling capacitor should be placed within 2 inches of the device and can be shared with other op amps. For split supply, a capacitor is required for both supplies.
6. A 0.1µF power supply decoupling capacitor should be placed as near to the power supply pins as possible. Preferably within 0.1 inch. For split supply, a capacitor is required for both supplies.
7. The $\overline{PD}$ pin uses TTL logic levels referenced to the negative supply voltage (V_{S-}). When not used it should tied to the positive supply to enable the amplifier. When used, it must be actively driven high or low and should not be left in an indeterminate logic state. A bypass capacitor is not required, but can be used for robustness in noisy environments.

PACKAGING INFORMATION

Orderable Device	Status (1)	Package Type	Package Drawing	Pins	Package Qty	Eco Plan (2)	Lead/Ball Finish	MSL Peak Temp (3)	Op Temp (°C)	Top-Side Markings (4)	Samples
THS4532IPW	ACTIVE	TSSOP	PW	16	90	Green (RoHS & no Sb/Br)	CU NIPDAU	Level-2-260C-1 YEAR	-40 to 125	THS4532	Samples
THS4532IPWR	ACTIVE	TSSOP	PW	16	2000	Green (RoHS & no Sb/Br)	CU NIPDAU	Level-2-260C-1 YEAR	-40 to 125	THS4532	Samples

(1) The marketing status values are defined as follows:
ACTIVE: Product device recommended for new designs.
LIFEBUY: TI has announced that the device will be discontinued, and a lifetime-buy period is in effect.
NRND: Not recommended for new designs. Device is in production to support existing customers, but TI does not recommend using this part in a new design.
PREVIEW: Device has been announced but is not in production. Samples may or may not be available.
OBSOLETE: TI has discontinued the production of the device.

(2) Eco Plan - The planned eco-friendly classification: Pb-Free (RoHS), Pb-Free (RoHS Exempt), or Green (RoHS & no Sb/Br) - please check http://www.ti.com/productcontent for the latest availability information and additional product content details.
TBD: The Pb-Free/Green conversion plan has not been defined.
Pb-Free (RoHS): TI's terms "Lead-Free" or "Pb-Free" mean semiconductor products that are compatible with the current RoHS requirements for all 6 substances, including the requirement that lead not exceed 0.1% by weight in homogeneous materials. Where designed to be soldered at high temperatures, TI Pb-Free products are suitable for use in specified lead-free processes.
Pb-Free (RoHS Exempt): This component has a RoHS exemption for either 1) lead-based flip-chip solder bumps used between the die and package, or 2) lead-based die adhesive used between the die and leadframe. The component is otherwise considered Pb-Free (RoHS compatible) as defined above.
Green (RoHS & no Sb/Br): TI defines "Green" to mean Pb-Free (RoHS compatible), and free of Bromine (Br) and Antimony (Sb) based flame retardants (Br or Sb do not exceed 0.1% by weight in homogeneous material)

(3) MSL, Peak Temp. -- The Moisture Sensitivity Level rating according to the JEDEC industry standard classifications, and peak solder temperature.

(4) Only one of markings shown within the brackets will appear on the physical device.

Important Information and Disclaimer: The information provided on this page represents TI's knowledge and belief as of the date that it is provided. TI bases its knowledge and belief on information provided by third parties, and makes no representation or warranty as to the accuracy of such information. Efforts are underway to better integrate information from third parties. TI has taken and continues to take reasonable steps to provide representative and accurate information but may not have conducted destructive testing or chemical analysis on incoming materials and chemicals. TI and TI suppliers consider certain information to be proprietary, and thus CAS numbers and other limited information may not be available for release.

In no event shall TI's liability arising out of such information exceed the total purchase price of the TI part(s) at issue in this document sold by TI to Customer on an annual basis.

TAPE AND REEL INFORMATION

REEL DIMENSIONS

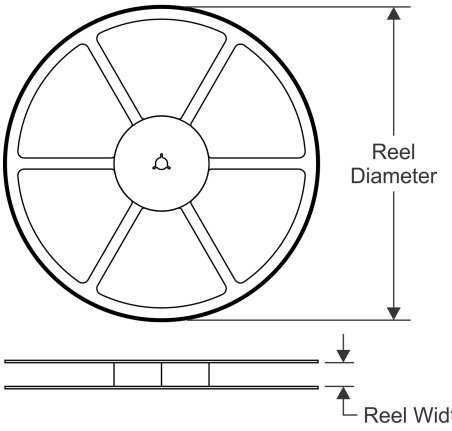

TAPE DIMENSIONS

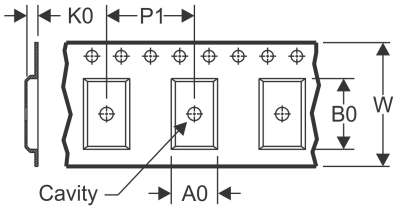

A0	Dimension designed to accommodate the component width
B0	Dimension designed to accommodate the component length
K0	Dimension designed to accommodate the component thickness
W	Overall width of the carrier tape
P1	Pitch between successive cavity centers

QUADRANT ASSIGNMENTS FOR PIN 1 ORIENTATION IN TAPE

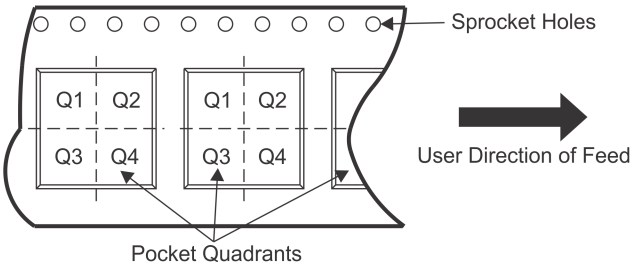

*All dimensions are nominal

Device	Package Type	Package Drawing	Pins	SPQ	Reel Diameter (mm)	Reel Width W1 (mm)	A0 (mm)	B0 (mm)	K0 (mm)	P1 (mm)	W (mm)	Pin1 Quadrant
THS4532IPWR	TSSOP	PW	16	2000	330.0	12.4	6.9	5.6	1.6	8.0	12.0	Q1

TAPE AND REEL BOX DIMENSIONS

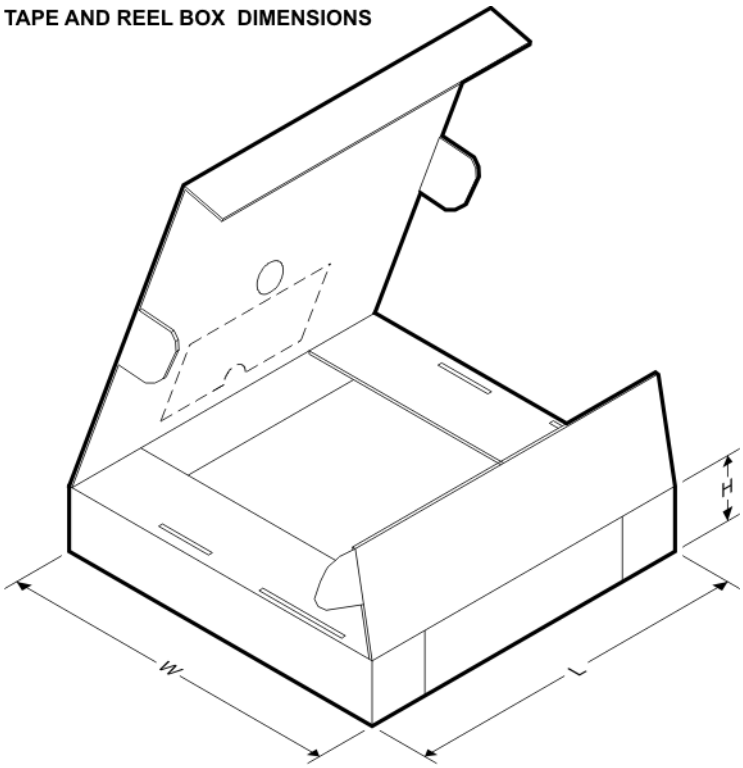

*All dimensions are nominal

Device	Package Type	Package Drawing	Pins	SPQ	Length (mm)	Width (mm)	Height (mm)
THS4532IPWR	TSSOP	PW	16	2000	367.0	367.0	35.0

PW (R–PDSO–G16) PLASTIC SMALL OUTLINE

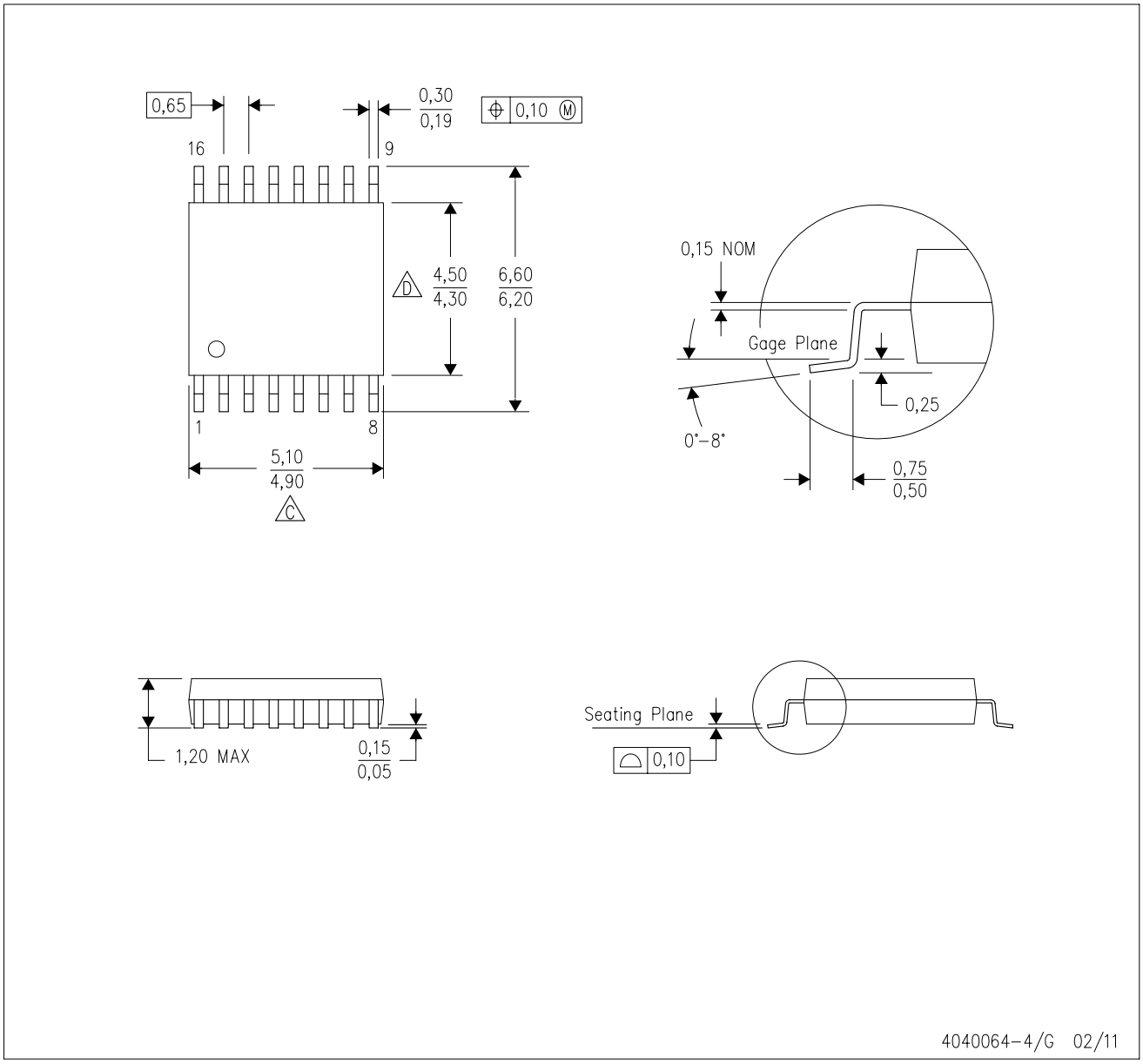

NOTES:
A. All linear dimensions are in millimeters. Dimensioning and tolerancing per ASME Y14.5M–1994.
B. This drawing is subject to change without notice.
C. Body length does not include mold flash, protrusions, or gate burrs. Mold flash, protrusions, or gate burrs shall not exceed 0,15 each side.
D. Body width does not include interlead flash. Interlead flash shall not exceed 0,25 each side.
E. Falls within JEDEC MO–153

IMPORTANT NOTICE

Texas Instruments Incorporated and its subsidiaries (TI) reserve the right to make corrections, enhancements, improvements and other changes to its semiconductor products and services per JESD46, latest issue, and to discontinue any product or service per JESD48, latest issue. Buyers should obtain the latest relevant information before placing orders and should verify that such information is current and complete. All semiconductor products (also referred to herein as “components”) are sold subject to TI’s terms and conditions of sale supplied at the time of order acknowledgment.

TI warrants performance of its components to the specifications applicable at the time of sale, in accordance with the warranty in TI’s terms and conditions of sale of semiconductor products. Testing and other quality control techniques are used to the extent TI deems necessary to support this warranty. Except where mandated by applicable law, testing of all parameters of each component is not necessarily performed.

TI assumes no liability for applications assistance or the design of Buyers’ products. Buyers are responsible for their products and applications using TI components. To minimize the risks associated with Buyers’ products and applications, Buyers should provide adequate design and operating safeguards.

TI does not warrant or represent that any license, either express or implied, is granted under any patent right, copyright, mask work right, or other intellectual property right relating to any combination, machine, or process in which TI components or services are used. Information published by TI regarding third-party products or services does not constitute a license to use such products or services or a warranty or endorsement thereof. Use of such information may require a license from a third party under the patents or other intellectual property of the third party, or a license from TI under the patents or other intellectual property of TI.

Reproduction of significant portions of TI information in TI data books or data sheets is permissible only if reproduction is without alteration and is accompanied by all associated warranties, conditions, limitations, and notices. TI is not responsible or liable for such altered documentation. Information of third parties may be subject to additional restrictions.

Resale of TI components or services with statements different from or beyond the parameters stated by TI for that component or service voids all express and any implied warranties for the associated TI component or service and is an unfair and deceptive business practice. TI is not responsible or liable for any such statements.

Buyer acknowledges and agrees that it is solely responsible for compliance with all legal, regulatory and safety-related requirements concerning its products, and any use of TI components in its applications, notwithstanding any applications-related information or support that may be provided by TI. Buyer represents and agrees that it has all the necessary expertise to create and implement safeguards which anticipate dangerous consequences of failures, monitor failures and their consequences, lessen the likelihood of failures that might cause harm and take appropriate remedial actions. Buyer will fully indemnify TI and its representatives against any damages arising out of the use of any TI components in safety-critical applications.

In some cases, TI components may be promoted specifically to facilitate safety-related applications. With such components, TI’s goal is to help enable customers to design and create their own end-product solutions that meet applicable functional safety standards and requirements. Nonetheless, such components are subject to these terms.

No TI components are authorized for use in FDA Class III (or similar life-critical medical equipment) unless authorized officers of the parties have executed a special agreement specifically governing such use.

Only those TI components which TI has specifically designated as military grade or “enhanced plastic” are designed and intended for use in military/aerospace applications or environments. Buyer acknowledges and agrees that any military or aerospace use of TI components which have ***not*** been so designated is solely at the Buyer's risk, and that Buyer is solely responsible for compliance with all legal and regulatory requirements in connection with such use.

TI has specifically designated certain components as meeting ISO/TS16949 requirements, mainly for automotive use. In any case of use of non-designated products, TI will not be responsible for any failure to meet ISO/TS16949.

Products		**Applications**	
Audio	www.ti.com/audio	Automotive and Transportation	www.ti.com/automotive
Amplifiers	amplifier.ti.com	Communications and Telecom	www.ti.com/communications
Data Converters	dataconverter.ti.com	Computers and Peripherals	www.ti.com/computers
DLP® Products	www.dlp.com	Consumer Electronics	www.ti.com/consumer-apps
DSP	dsp.ti.com	Energy and Lighting	www.ti.com/energy
Clocks and Timers	www.ti.com/clocks	Industrial	www.ti.com/industrial
Interface	interface.ti.com	Medical	www.ti.com/medical
Logic	logic.ti.com	Security	www.ti.com/security
Power Mgmt	power.ti.com	Space, Avionics and Defense	www.ti.com/space-avionics-defense
Microcontrollers	microcontroller.ti.com	Video and Imaging	www.ti.com/video
RFID	www.ti-rfid.com		
OMAP Applications Processors	www.ti.com/omap	**TI E2E Community**	e2e.ti.com
Wireless Connectivity	www.ti.com/wirelessconnectivity		

Mailing Address: Texas Instruments, Post Office Box 655303, Dallas, Texas 75265
Copyright © 2013, Texas Instruments Incorporated