NPN Transistors

BC337 (KC337)

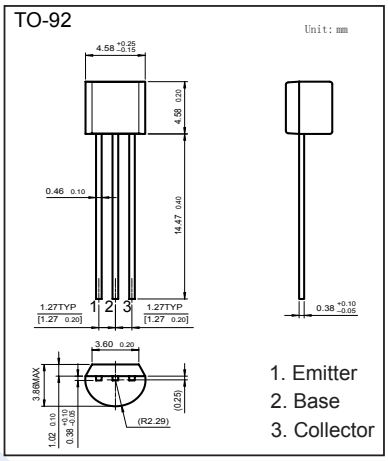

■ Features

- Collector Current Capability I_C=0.5A
- Collector Emitter Voltage V_{CEO}=45V
- Complement to BC327.

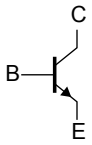

■ Absolute Maximum Ratings Ta = 25℃

Parameter	Symbol	Rating	Unit
Collector - Base Voltage	V_{CBO}	50	V
Collector - Emitter Voltage	V_{CEO}	45	
Emitter - Base Voltage	V_{EBO}	5	
Collector Current - Continuous	I_C	500	mA
Collector Current - Pulse	I_{CP}	1	A
Base Current - Pulse	I_{BP}	200	mA
Collector Power Dissipation	P_C	625	mW
Thermal Resistance From Junction to Ambient	$R_{\theta JA}$	0.2	℃/mw
Junction Temperature	T_J	150	℃
Storage Temperature Range	T_{stg}	-65 to 150	

■ Electrical Characteristics Ta = 25℃

Parameter	Symbol	Test Conditions	Min	Typ	Max	Unit
Collector- base breakdown voltage	V_{CBO}	I_C= 100 μA, I_E= 0	50			V
Collector- emitter breakdown voltage	V_{CEO}	I_C= 1 mA, I_B= 0	45			
Emitter - base breakdown voltage	V_{EBO}	I_E= 100 μA, I_C= 0	5			
Collector-base cut-off current	I_{CBO}	V_{CB}= 50 V , I_E= 0			0.1	uA
		V_{CB}= 50 V , I_E= 0 , T_J = 150℃			5	
Emitter cut-off current	I_{EBO}	V_{EB}= 5V , I_C=0			0.1	
Collector-emitter saturation voltage	$V_{CE(sat)}$	I_C=500 mA, I_B=50mA			0.7	V
Base - emitter saturation voltage	$V_{BE(sat)}$	I_C= 500 mA, I_B= 50mA			1.2	
Base - emitter voltage	V_{BE}	V_{CE}= 1V, I_C= 500mA			1.2	
DC current gain BC337	h_{FE}	V_{CE}= 1V, I_C= 100mA	100		600	
DC current gain BC337-16			100		250	
DC current gain BC337-25			160		400	
DC current gain BC337-40			250		600	
DC current gain		V_{CE}= 1V, I_C= 500mA	40			
Collector output capacitance	C_{ob}	V_{CB}= 10V, I_E=ie=0,f=1MHz		5		pF
Transition frequency	f_T	V_{CE}= 5V, I_C= 10mA,f=100MHz	100			MHz

NPN Transistors

BC337 (KC337)

■ Classification of $h_{fe(1)}$

Type	BC337	BC337-16	BC337-25	BC337-25
Range	100-600	100-250	160-400	250-600

■ Typical Characterisitics

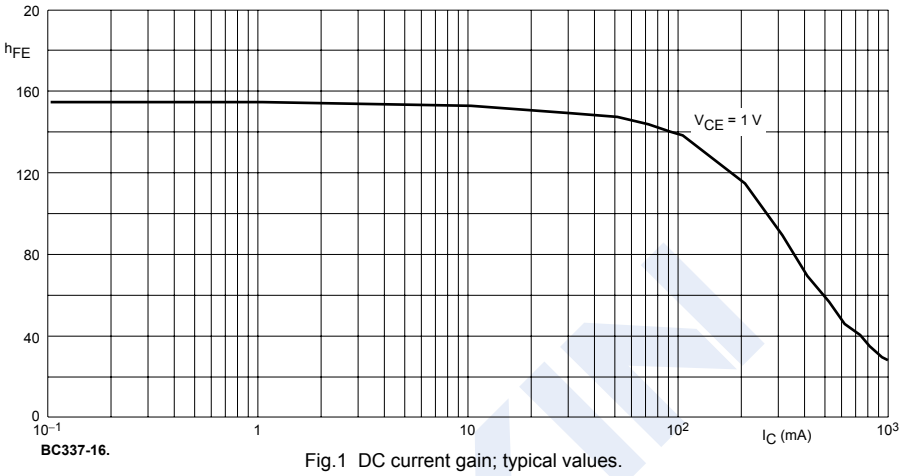

Fig.1 DC current gain; typical values.

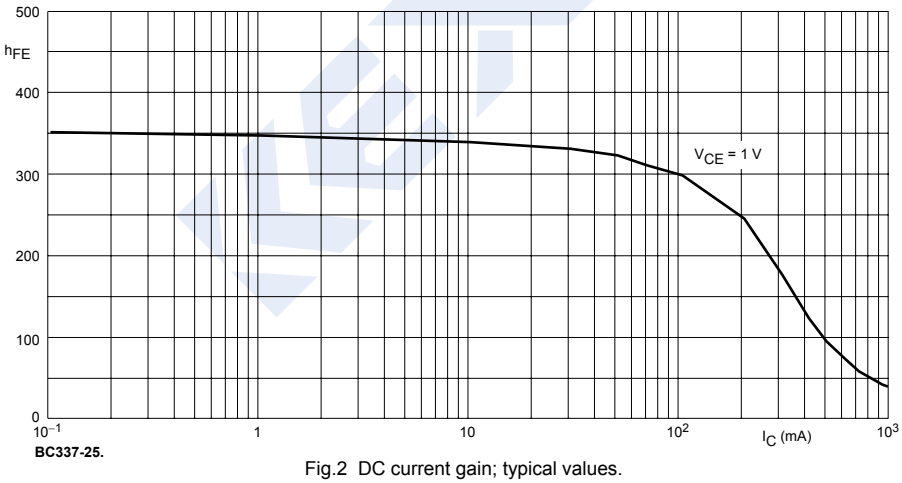

Fig.2 DC current gain; typical values.

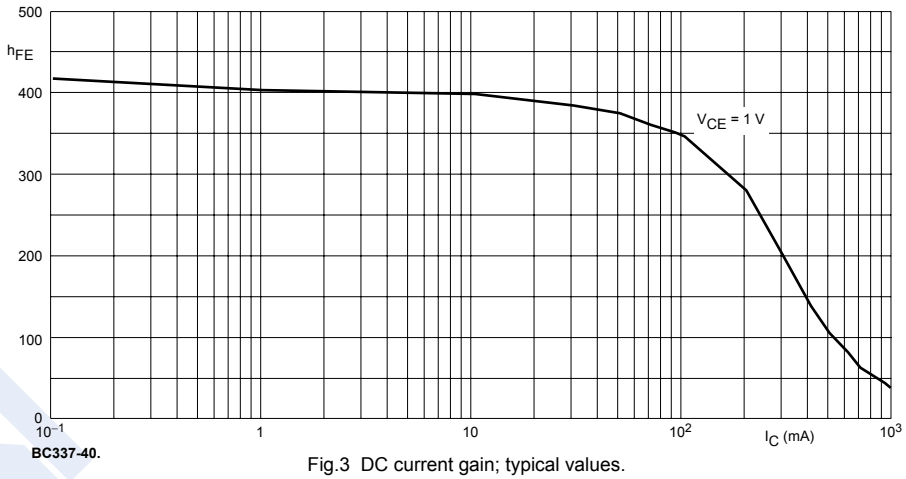

Fig.3 DC current gain; typical values.