OptoSupply

10mm Bullet Warm White LED

OSM5DKA201A

■Features

- High Luminous LEDs
- 10mm Bullet Standard Directivity
- Long Lifetime Operation (Up to 100,000 hours)
- Superior Weather-resistance
- UV Resistant Epoxy
- Water Clear Type

■Applications

- Electronic Signs And Signals
- Small Area Illuminations
- Back Lighting
- Other Lighting

■Outline Dimension

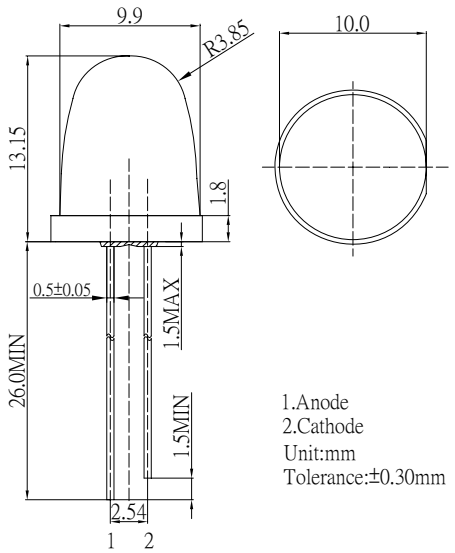

■Absolute Maximum Rating (Ta=25℃)

Item	Symbol	Value	Unit
DC Forward Current	I_F	30	mA
Pulse Forward Current*	I_{FP}	100	mA
Reverse Voltage	V_R	5	V
Power Dissipation	P_D	108	mW
Operating Temperature	Topr	-30 ~ +85	℃
Storage Temperature	Tstg	-40 ~ +100	℃
Lead Soldering Temperature	Tsol	260℃/5sec	-

*Pulse width Max 10ms , Duty ratio max 1/10

■Directivity

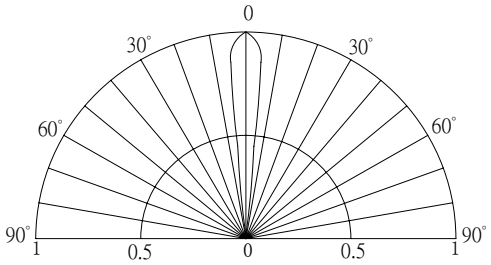

■Electrical -Optical Characteristics (Ta=25℃)

Item	Symbol	Condition	Min.	Typ.	Max.	Unit
DC Forward Voltage	V_F	I_F=20mA	2.9	3.1	3.6	V
DC Reverse Current	I_R	V_R=5V	-	-	10	μA
Luminous Intensity*	Iv	I_F=20mA	43000	52000	-	mcd
Chromaticity Coordinates*	x	I_F=20mA	-	0.45	-	
	y	I_F=20mA	-	0.41	-	
50% Power Angle	$2\theta_{1/2}$	I_F=20mA	-	8	-	deg

*1 Tolerance of chromaticity coordinates is ±10%
*2 Tolerance of luminous intensity is ±15%

LED & Application Technologies

ATTENTION
OBSERVE PRECAUTIONS
ELECTROSTATIC
SENSITIVE DEVICES