LF153
LF253 - LF353

WIDE BANDWIDTH
DUAL J-FET OPERATIONAL AMPLIFIERS

- LOW POWER CONSUMPTION
- WIDE COMMON-MODE (UP TO V_{CC}^{+}) AND DIFFERENTIAL VOLTAGE RANGE
- LOW INPUT BIAS AND OFFSET CURRENT
- OUTPUT SHORT-CIRCUIT PROTECTION
- HIGH INPUT IMPEDANCE J–FET INPUT STAGE
- INTERNAL FREQUENCY COMPENSATION
- LATCH UP FREE OPERATION
- HIGH SLEW RATE : 16V/µs (typ)

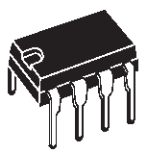

N
DIP8
(Plastic Package)

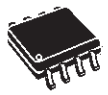

D
SO8
(Plastic Micropackage)

DESCRIPTION

The LF353 are high speed J–FET input dual operational amplifiers incorporating well matched, high voltage J–FET and bipolar transistors in a monolithic integrated circuit.

The devices feature high slew rates, low input bias and offset currents, and low offset voltage temperature coefficient.

ORDER CODES

Part Number	Temperature	Package	
		N	D
LF353	0°C, +70°C	•	•
LF253	–40°C, +105°C	•	•
LF153	–55°C, +125°C	•	•

PIN CONNECTIONS (top view)

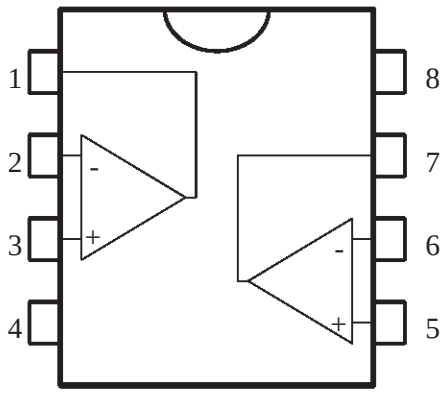

1 - Output 1
2 - Inverting input 1
3 - Non-inverting input 1
4 - V_{CC}^{-}
5 - Non-inverting input 2
6 - Inverting input 2
7 -Output 2
8 - V_{CC}^{+}

SCHEMATIC DIAGRAM (each amplifier)

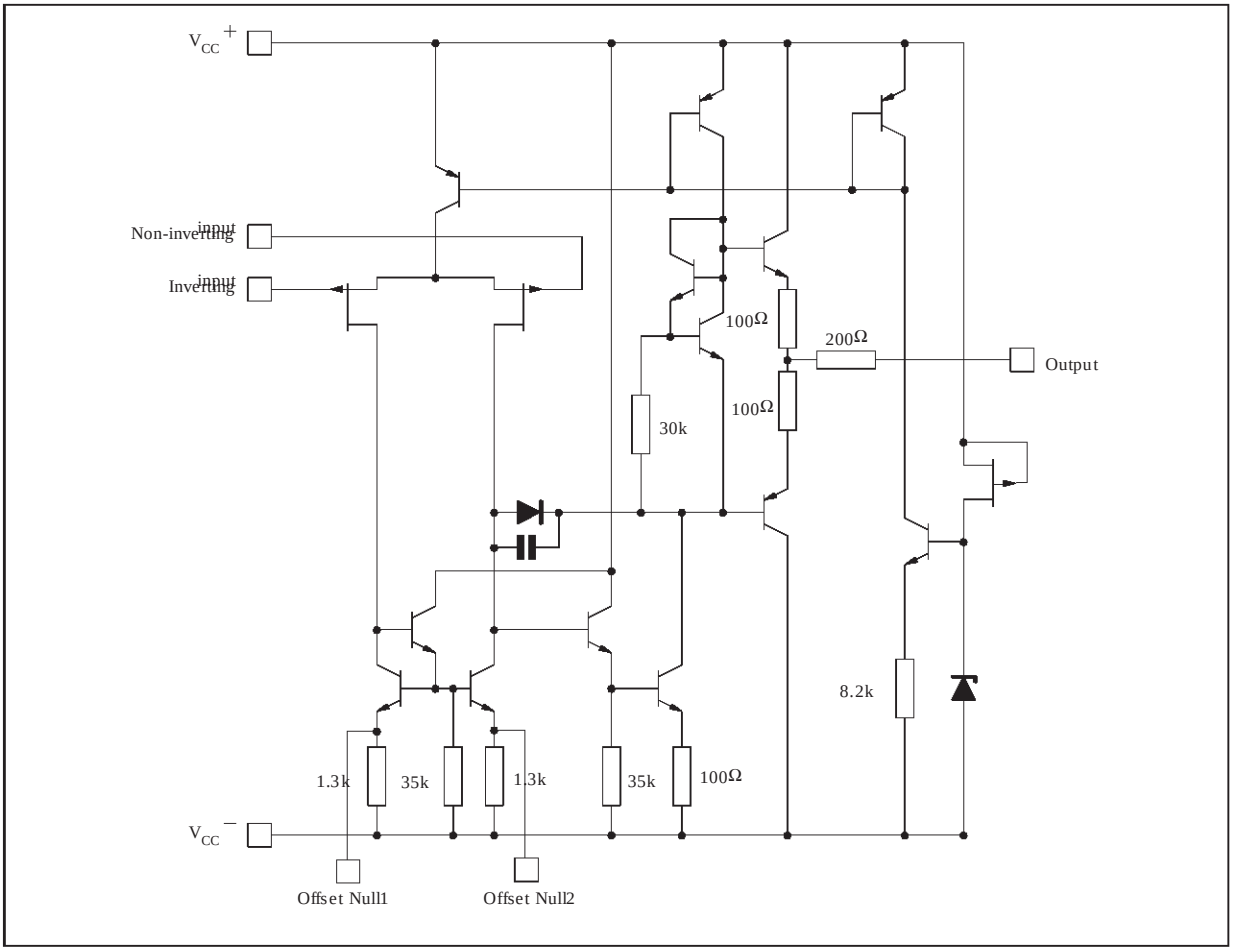

ABSOLUTE MAXIMUM RATINGS

Symbol	Parameter		Value	Unit
V_{CC}	Supply Voltage - (note 1)		±18	V
V_i	Input Voltage - (note 3)		±15	V
V_{id}	Differential Input Voltage - (note 2)		±30	V
P_{tot}	Power Dissipation		680	mW
	Output Short-circuit Duration - (note 4)		Infinite	
T_{oper}	Operating Free Air Temperature Range	LF353 LF253 LF153	0 to 70 –40 to 105 –55 to 125	°C
T_{stg}	Storage Temperature Range		–65 to 150	°C

Notes :
1. All voltage values, except differential voltage, are with respect to the zero reference level (ground) of the supply voltages where the zero reference level is the midpoint between V_{CC}^+ and V_{CC}^-.
2. Differential voltages are at the non-inverting input terminal with respect to the inverting input terminal.
3. The magnitude of the input voltage must never exceed the magnitude of the supply voltage or 15 volts, whichever is less.
4. The output may be shorted to ground or to either supply. Temperature and /or supply voltages must be limited to ensure that the dissipation rating is not exceeded.

ELECTRICAL CHARACTERISTICS

V_{CC} = ±15V, T_{amb} = 25°C (unless otherwise specified)

Symbol	Parameter	LF153 - LF253 - LF353			Unit
		Min.	Typ.	Max.	
V_{io}	Input Offset Voltage (R_S = 10kΩ) T_{amb} = 25°C $T_{min.} \le T_{amb} \le T_{max.}$		3	10 13	mV
DV_{io}	Input Offset Voltage Drift		10		µV/°C
I_{io}	Input Offset Current * T_{amb} = 25°C $T_{min.} \le T_{amb} \le T_{max.}$		5	100 4	pA nA
I_{ib}	Input Bias Current * T_{amb} = 25°C $T_{min.} \le T_{amb} \le T_{max.}$		20	200 20	pA nA
A_{vd}	Large Signal Voltage Gain (R_L = 2kΩ, V_O = ±10V) T_{amb} = 25°C $T_{min.} \le T_{amb} \le T_{max.}$	50 25	200		V/mV
SVR	Supply Voltage Rejection Ratio (R_S = 10kΩ) T_{amb} = 25°C $T_{min.} \le T_{amb} \le T_{max.}$	80 80	86		dB
I_{CC}	Supply Current (no load) T_{amb} = 25°C $T_{min.} \le T_{amb} \le T_{max.}$		1.4	3.2 3.2	mA
V_{icm}	Input Common Mode Voltage Range	±11	+15 -12		V
CMR	Common Mode Rejection Ratio (R_S = 10kΩ) T_{amb} = 25°C $T_{min.} \le T_{amb} \le T_{max.}$	70 70	86		dB
Ios	Output Short-circuit Current T_{amb} = 25°C $T_{min.} \le T_{amb} \le T_{max.}$	10 10	40	60 60	mA
$\pm V_{OPP}$	Output Voltage Swing T_{amb} = 25°C R_L = 2kΩ R_L = 10kΩ $T_{min.} \le T_{amb} \le T_{max.}$ R_L = 2kΩ R_L = 10kΩ	10 12 10 12	12 13.5		V
SR	Slew Rate (V_i = 10V, R_L = 2kΩ, C_L = 100pF, T_{amb} = 25°C, unity gain)	12	16		V/µs
t_r	Rise Time (V_i = 20mV, R_L = 2kΩ, C_L = 100pF, T_{amb} = 25°C, unity gain)		0.1		µs
K_{OV}	Overshoot (V_i = 20mV, R_L = 2kΩ, C_L = 100pF, T_{amb} = 25°C, unity gain)		10		%
GBP	Gain Bandwidth Product (f = 100kHz, T_{amb} = 25°C, V_{in} = 10mV, R_L = 2kΩ, C_L = 100pF)	2.5	4		MHz
R_i	Input Resistance		10^{12}		Ω
THD	Total Harmonic Distortion (f = 1kHz, A_V = 20dB, R_L = 2kΩ, C_L = 100pF, T_{amb} = 25°C, V_O = $2V_{PP}$)		0.01		%
e_n	Equivalent Input Noise Voltage (f = 1kHz, R_s = 100Ω)		15		$\frac{nV}{\sqrt{Hz}}$
Øm	Phase Margin		45		Degrees
V_{O1}/V_{O2}	Channel Separation (A_V = 100, T_{amb} = 25°C)		120		dB

* The input bias currents are junction leakage currents which approximately double for every 10°C increase in the junction temperature.

MAXIMUM PEAK-TO-PEAK OUTPUT VOLTAGE VERSUS FREQUENCY

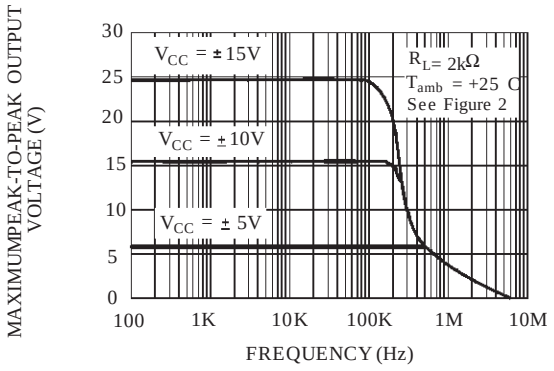

MAXIMUM PEAK-TO-PEAK OUTPUT VOLTAGE VERSUS FREQUENCY

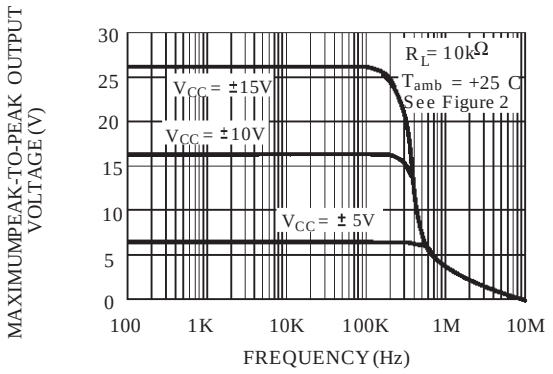

MAXIMUM PEAK-TO-PEAK OUTPUT VOLTAGE VERSUS FREQUENCY

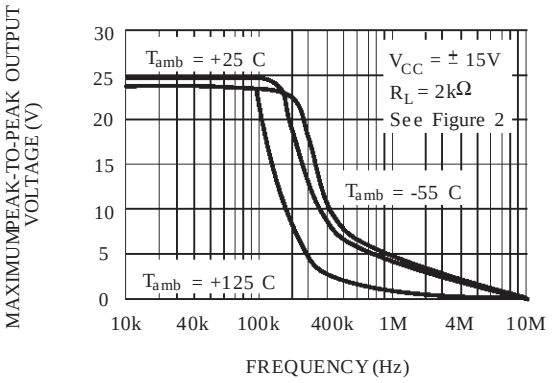

MAXIMUM PEAK-TO-PEAK OUTPUT VOLTAGE VERSUS FREE AIR TEMP.

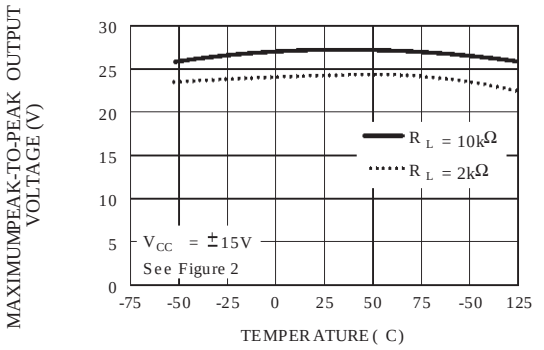

MAXIMUM PEAK-TO-PEAK OUTPUT VOLTAGE VERSUS LOAD RESISTANCE

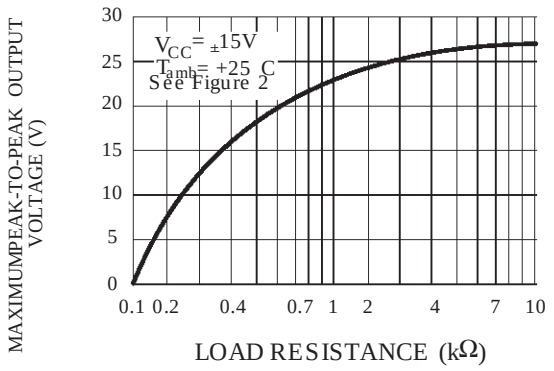

MAXIMUM PEAK-TO-PEAK OUTPUT VOLTAGE VERSUS SUPPLY VOLTAGE

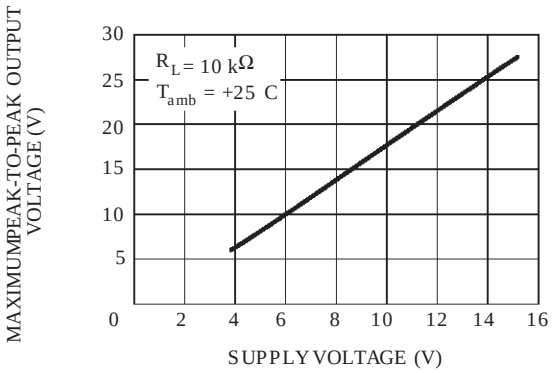

INPUT BIAS CURRENT VERSUS FREE AIR TEMPERATURE

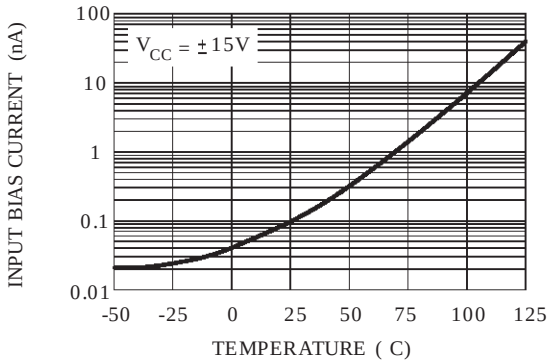

LARGE SIGNAL DIFFERENTIAL VOLTAGE AMPLIFICATION VERSUS FREE AIR TEMPERATURE

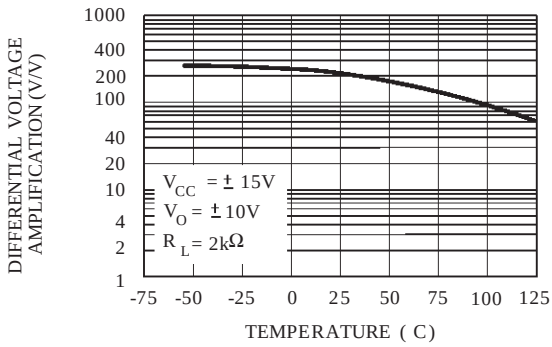

LARGE SIGNAL DIFFERENTIAL VOLTAGE AMPLIFICATION AND PHASE SHIFT VERSUS FREQUENCY

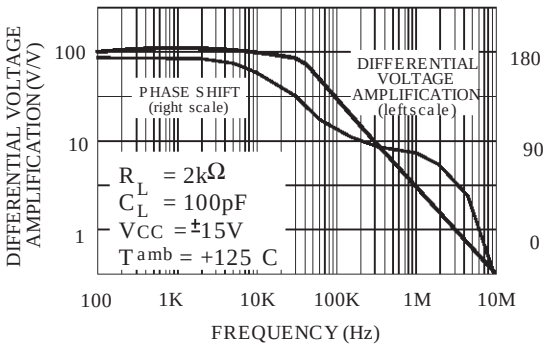

TOTAL POWER DISSIPATION VERSUS FREE AIR TEMPERATURE

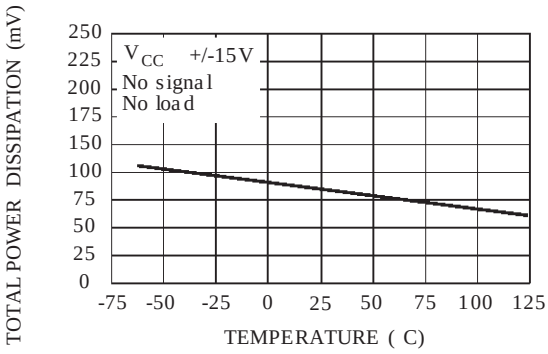

SUPPLY CURRENT PER AMPLIFIER VERSUS FREE AIR TEMPERATURE

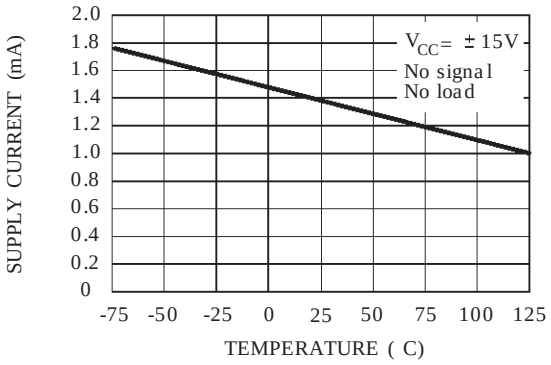

SUPPLY CURRENT PER AMPLIFIER VERSUS SUPPLY VOLTAGE

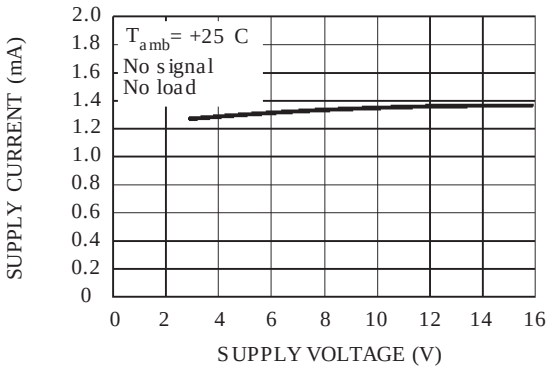

COMMON MODE REJECTION RATIO VERSUS FREE AIR TEMPERATURE

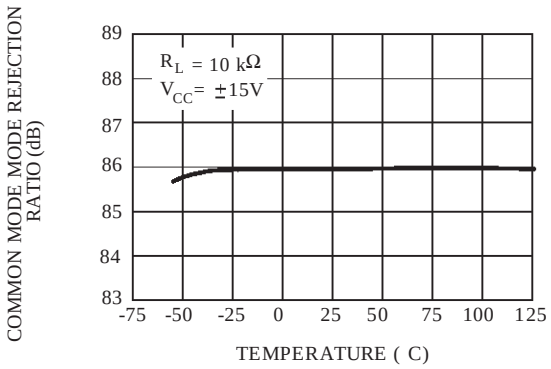

VOLTAGE FOLLOWER LARGE SIGNAL PULSE RESPONSE

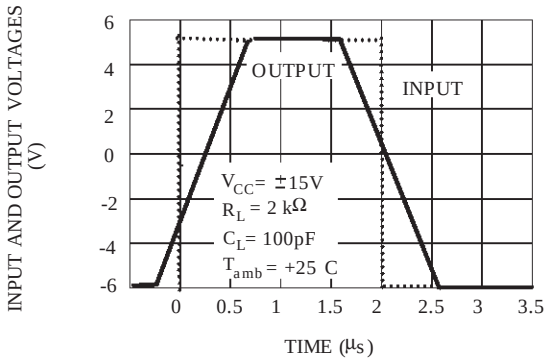

OUTPUT VOLTAGE VERSUS ELAPSED TIME

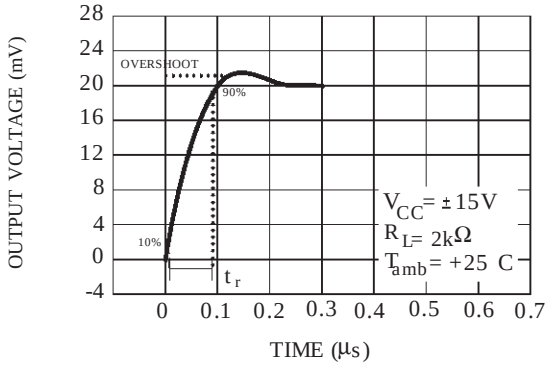

EQUIVALENT INPUT NOISE VOLTAGE VERSUS FREQUENCY

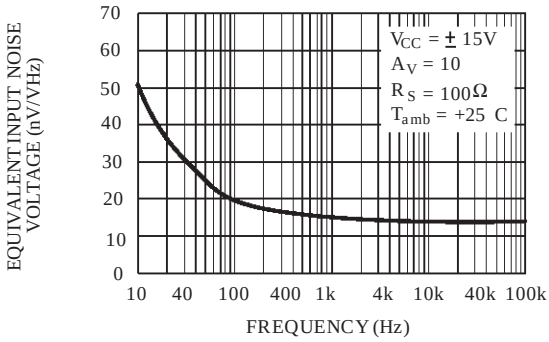

TOTAL HARMONIC DISTORTION VERSUS FREQUENCY

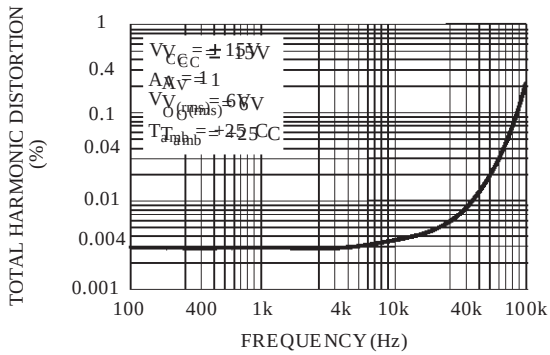

PARAMETER MEASUREMENT INFORMATION

Figure 1 : Voltage Follower

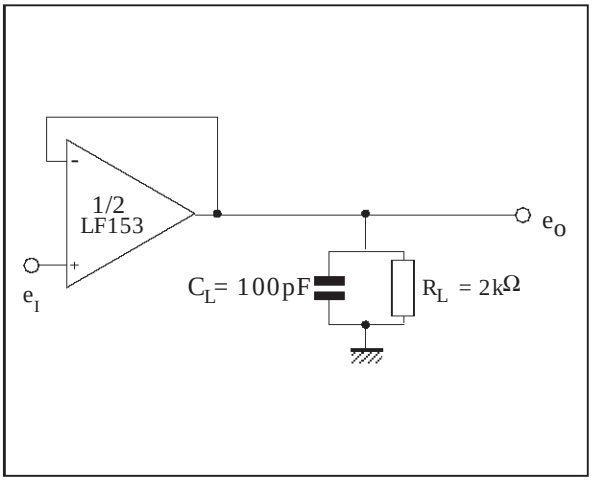

Figure 2 : Gain-of-10 Inverting Amplifier

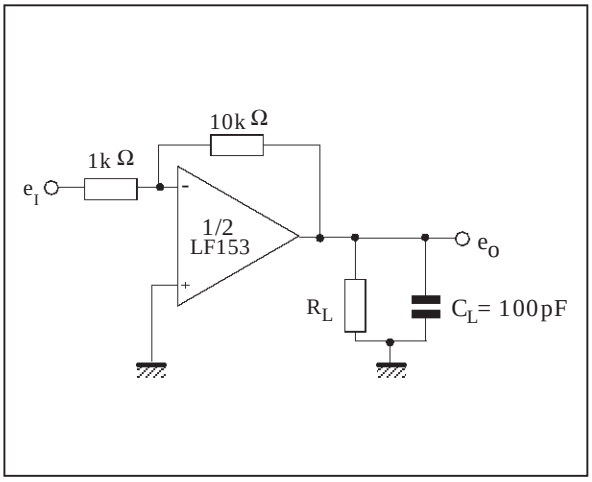

TYPICAL APPLICATIONS

QUADRUPLE OSCILLATOR

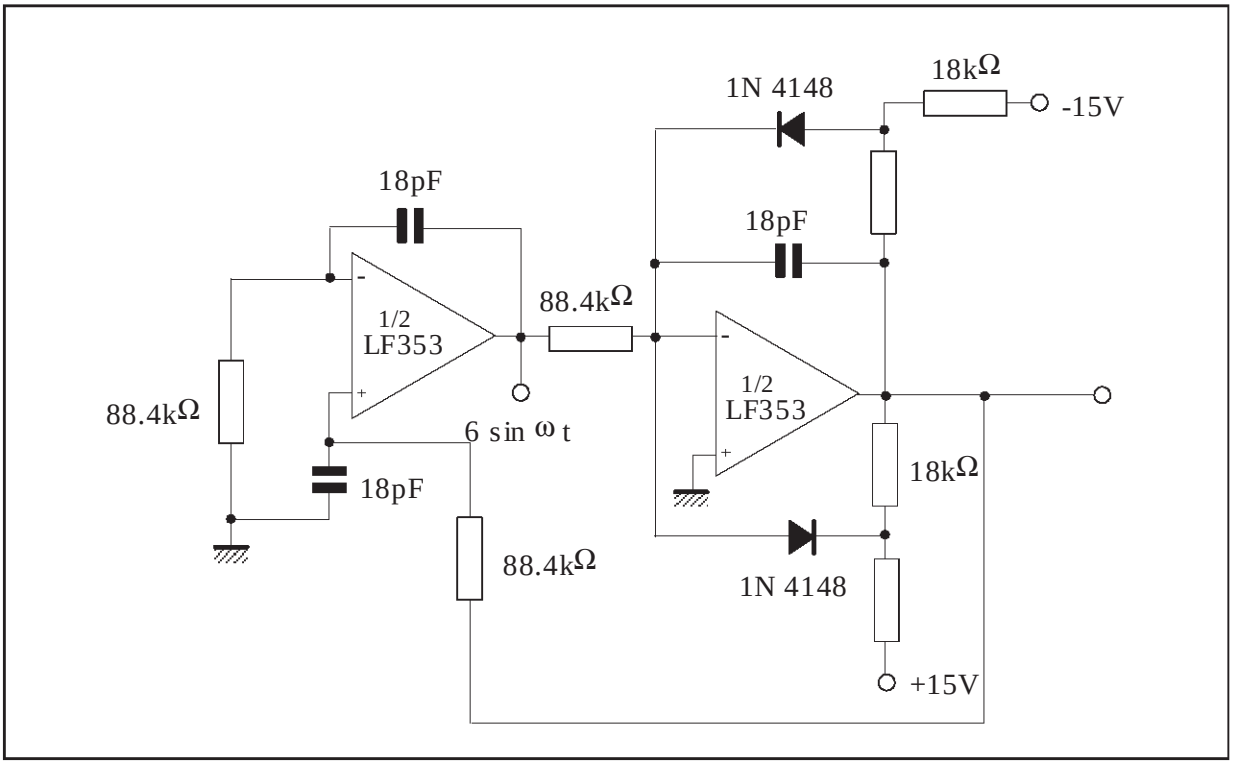

PACKAGE MECHANICAL DATA
8 PINS - PLASTIC DIP

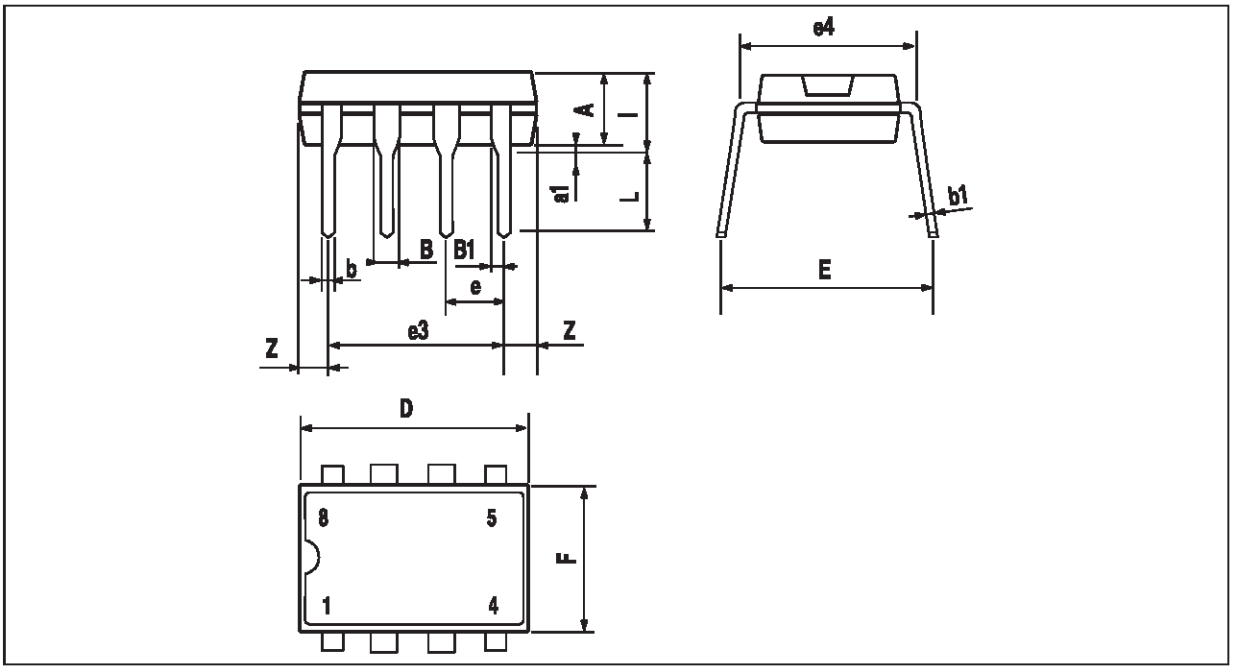

Dimensions	Millimeters			Inches		
	Min.	Typ.	Max.	Min.	Typ.	Max.
A		3.32			0.131	
a1	0.51			0.020		
B	1.15		1.65	0.045		0.065
b	0.356		0.55	0.014		0.022
b1	0.204		0.304	0.008		0.012
D			10.92			0.430
E	7.95		9.75	0.313		0.384
e		2.54			0.100	
e3		7.62			0.300	
e4		7.62			0.300	
F			6.6			0260
i			5.08			0.200
L	3.18		3.81	0.125		0.150
Z			1.52			0.060

DIP8.TBL

PACKAGE MECHANICAL DATA
8 PINS - PLASTIC MICROPACKAGE (SO)

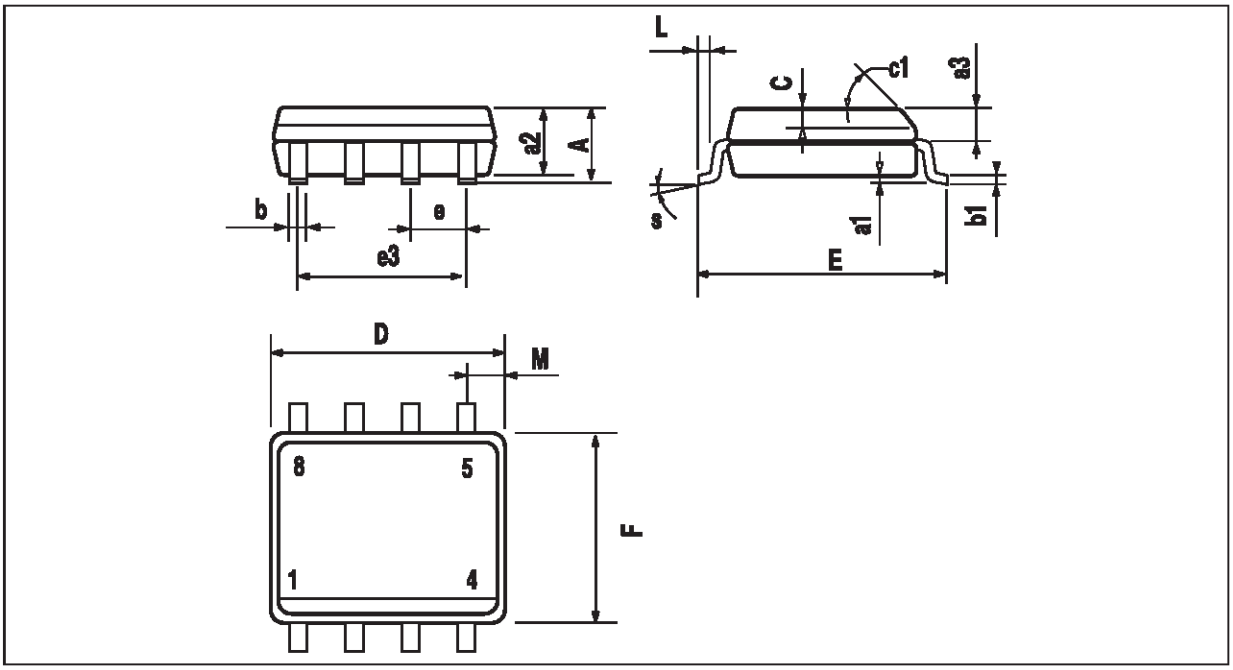

Dimensions	Millimeters			Inches		
	Min.	Typ.	Max.	Min.	Typ.	Max.
A			1.75			0.069
a1	0.1		0.25	0.004		0.010
a2			1.65			0.065
a3	0.65		0.85	0.026		0.033
b	0.35		0.48	0.014		0.019
b1	0.19		0.25	0.007		0.010
C	0.25		0.5	0.010		0.020
c1	45° (typ.)					
D	4.8		5.0	0.189		0.197
E	5.8		6.2	0.228		0.244
e		1.27			0.050	
e3		3.81			0.150	
F	3.8		4.0	0.150		0.157
L	0.4		1.27	0.016		0.050
M			0.6			0.024
S	8° (max.)					

SO8.TBL

Information furnished is believed to be accurate and reliable. However, STMicroelectronics assumes no responsibility for the consequences of use of such information nor for any infringement of patents or other rights of third parties which may result from its use. No license is granted by implication or otherwise under any patent or patent rights of STMicroelectronics. Specifications mentioned in this publication are subject to change without notice. This publication supersedes and replaces all information previously supplied. STMicroelectronics products are not authorized for use as critical components in life support devices or systems without express written approval of STMicroelectronics.

© The ST logo is a trademark of STMicroelectronics

© 1998 STMicroelectronics – Printed in Italy – All Rights Reserved
STMicroelectronics GROUP OF COMPANIES
Australia - Brazil - Canada - China - France - Germany - Italy - Japan - Korea - Malaysia - Malta - Mexico - Morocco
The Netherlands - Singapore - Spain - Sweden - Switzerland - Taiwan - Thailand - United Kingdom - U.S.A.

ORDER CODE :