TPS2559 Precision Adjustable Current-Limited Power-Distribution Switch

1 Features

- 2.5 to 6.5 V Operating Range
- Adjustable 1.2 to 4.7 A $I_{(LIMIT)}$ (±4.4% at 4.7 A)
- 3.5 µs Short Circuit Shutoff (Typical)
- 13-mΩ High-Side MOSFET
- 2-µA Maximum Standby Supply Current
- Built-in Soft-Start
- 8 kV / 15 kV System-Level ESD Capable
- UL 2367 Recognition Pending

2 Applications

- USB Ports/Hubs
- Digital TV
- Set-Top Boxes
- VOIP Phones

3 Description

The TPS2559 power-distribution switch is intended for applications where a low resistance, precision current limit switch is required or heavy capacitive loads are encountered. The TPS2559 provides up to 5.5 A of continuous load current with a precise current limit set by a single resistor to ground. Output current is maintained at a safe level by switching into a constant-current mode when the output load exceeds the current-limit threshold. During overload events the output current is limited to the level set by $R_{(ILIM)}$. If a persistent overload occurs, the device goes into thermal shutoff to prevent damage to the TPS2559.

The power-switch rise and fall times are controlled to minimize current surges during turn on or off. The $\overline{\text{FAULT}}$ logic output asserts low during overcurrent or overtemperature conditions.

Device Information(1)

PART NUMBER	PACKAGE	BODY SIZE (NOM)
TPS2559	VSON (10)	3.00mm x 3.00mm

(1) For all available packages, see the orderable addendum at the end of the datasheet.

4 Simplified Schematic

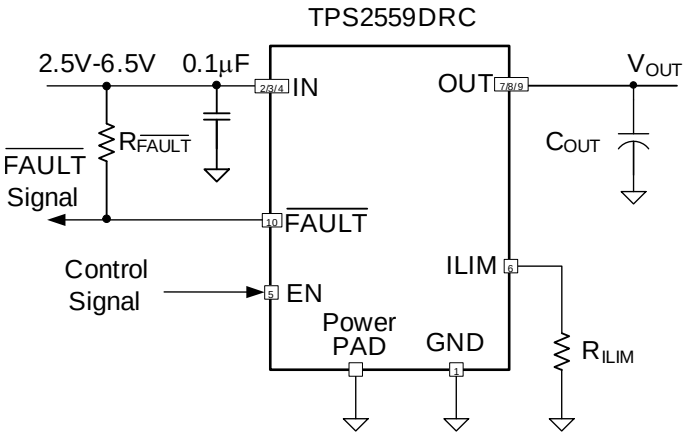

An IMPORTANT NOTICE at the end of this data sheet addresses availability, warranty, changes, use in safety-critical applications, intellectual property matters and other important disclaimers. PRODUCTION DATA.

Table of Contents

1 Features ... 1
2 Applications ... 1
3 Description ... 1
4 Simplified Schematic ... 1
5 Revision History ... 2
6 Device Comparison Table ... 3
7 Pin Configuration and Functions ... 3
8 Specifications ... 4
8.1 Absolute Maximum Ratings ... 4
8.2 Handling Ratings ... 4
8.3 Recommended Operating Conditions ... 4
8.4 Thermal Information ... 4
8.5 Electrical Characteristics ... 5
8.6 Timing Requirements ... 6
8.7 Typical Characteristics ... 7
9 Parameter Measurement Information ... 9
10 Detailed Description ... 10
10.1 Overview ... 10
10.2 Functional Block Diagram ... 10
10.3 Feature Description ... 10
10.4 Device Functional Modes ... 11
11 Application and Implementation ... 12
11.1 Application Information ... 12
11.2 Typical Application ... 12
12 Power Supply Recommendations ... 19
13 Layout ... 20
13.1 Layout Guidelines ... 20
13.2 Layout Example ... 20
14 Device and Documentation Support ... 21
14.1 Trademarks ... 21
14.2 Electrostatic Discharge Caution ... 21
14.3 Glossary ... 21
15 Mechanical, Packaging, and Orderable Information ... 21

5 Revision History

DATE	REVISION	NOTES
June 2014	*	Initial release.

Copyright © 2014, Texas Instruments Incorporated

6 Device Comparison Table

Device	Operation Range (V)	OCP Mode	ICONT. Adj. Range (A)	$R_{DS(on)}$ (mΩ)	I_{OS} tolerance	Package SON-8 (DRB) SOT-23 (DBV) SON-10 (DRC) SON-6 (DRV)
TPS2559	2.5 - 6.5	Auto Retry	5.5	13	±4.4% at 4.7A	DRC
TPS2552/3	2.5 - 6.5	Auto Retry	1.2	85 (DBV) 100 (DRV)	±6% at 1.7A	DBV DRV
TPS2552/3-1	2.5 - 6.5	Latch Off	1.2	85 (DBV) 100 (DRV)	±6% at 1.7A	DBV DRV
TPS2554/5 (Dual Adjustable)	4.5 - 5.5	Auto Retry	2.5	73	±9.7% at 2.8A	DRC
TPS2556/7	2.5 - 6.5	Auto Retry	5	22	±6.5% at 4.5A	DRB
TPS2560/61 (Dual Channels)	2.5 - 6.5	Auto Retry	2.5	44	±7.5% at 2.8A	DRC
TPS2560A/61A (Dual Channels)	2.5 - 6.5	Auto Retry	2.5	44	2.1A to 2.5A including ±1% $R_{(ILIM)}$	DRC
TPS25200 (With OVP protection)	2.5 - 6.5 (Withstand up to 20V)	Auto Retry	2.5	60	±6% at 2.9A	DRV

7 Pin Configuration and Functions

TPS2559
DRC PACKAGE
(TOP VIEW)

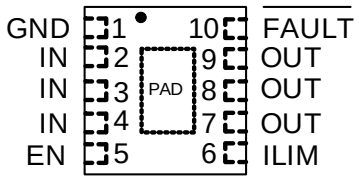

Pin Functions

PIN		TYPE	DESCRIPTION
NAME	NO.		
GND	1		Ground connection, connect externally to PowerPAD
IN	2,3,4	I	Input voltage, connect a 0.1 µF or greater ceramic capacitor from IN to GND as close to the IC as possible.
EN	5	I	Enable input, logic high turns on power switch
ILIM	6	O	External resistor used to set current-limit threshold; recommended. 24.9 kΩ ≤ $R_{(ILIM)}$ ≤ 100 kΩ.
OUT	7,8,9	O	Power-switch output
$\overline{FAULT}$	10	O	Active-low open-drain output, asserted during over-current or overtemperature conditions.
PowerPAD™	PAD		Internally connected to GND; used to heat-sink the part to the circuit board traces. Connect PowerPAD to GND pin externally.

8 Specifications

8.1 Absolute Maximum Ratings

over operating free-air temperature range (unless otherwise noted) (1) (2)

		MIN	MAX	UNIT
Voltage range	IN, OUT, EN, ILIM, $\overline{\text{FAULT}}$	–0.3	7	V
	IN to OUT	–7	7	V
Continuous output current, I_{OUT}	OUT	Internally Limited		mA
Continuous $\overline{\text{FAULT}}$ sink current			20	mA
ILIM source current		Internally Limited		mA
Maximum junction temperature, T_J		–40 to OTSD2		°C

(1) Stresses beyond those listed under *Absolute Maximum Ratings* may cause permanent damage to the device. These are stress ratings only, which do not imply functional operation of the device at these or any other conditions beyond those indicated under *Recommended Operating Conditions*. Exposure to absolute-maximum-rated conditions for extended periods may affect device reliability.
(2) Voltages are referenced to GND unless otherwise noted.

8.2 Handling Ratings

			MIN	MAX	UNIT
T_{stg}	Storage temperature range		–65	150	°C
$V_{(ESD)}$	Electrostatic discharge	Human body model (HBM), per ANSI/ESDA/JEDEC JS-001, all pins(1)	–2	2	kV
		Charged device model (CDM), per JEDEC specification JESD22-C101, all pins(2)	–500	500	V
		System Level (Contact/Air) (3)	–8/15	8/15	kV

(1) JEDEC document JEP155 states that 500-V HBM allows safe manufacturing with a standard ESD control process.
(2) JEDEC document JEP157 states that 250-V CDM allows safe manufacturing with a standard ESD control process.
(3) Surges per EN61000-4-2, 1999 applied between USB and output ground of the TPS2559EVM (SLUUB15) evaluation module (documentation available on the Web.) These were the test levels, not the failure threshold.

8.3 Recommended Operating Conditions

over operating free-air temperature range (unless otherwise noted)

		MIN	MAX	UNIT
V_{IN}	Input voltage, IN	2.5	6.5	V
V_{EN}	Input voltage, EN	0	6.5	V
I_{OUT}	Continuous output current of OUT		5.5	A
	Continuous $\overline{\text{FAULT}}$ sink current		10	mA
$R_{(ILIM)}$	Recommended resistor limit range (1)	24.9	100	kΩ
T_J	Operating junction temperature	-40	125	°C

(1) $R_{(ILIM)}$ is the resistor from ILIM pin to GND and ILIM pin can be shorted to GND.

8.4 Thermal Information

THERMAL METRIC(1)		TPS2559 DRC (10 PINS)	UNIT
$R_{\theta JA}$	Junction-to-ambient thermal resistance	40.6	°C/W
$R_{\theta JC(top)}$	Junction-to-case (top) thermal resistance	45.5	
$R_{\theta JB}$	Junction-to-board thermal resistance	15.9	
ψ_{JT}	Junction-to-top characterization parameter	0.4	
ψ_{JB}	Junction-to-board characterization parameter	15.7	
$R_{\theta JC(bot)}$	Junction-to-case (bottom) thermal resistance	2.8	

(1) For more information about traditional and new thermal metrics, see the *IC Package Thermal Metrics* application report, SPRA953.

Copyright © 2014, Texas Instruments Incorporated

8.5 Electrical Characteristics

Conditions are –40°C ≤ T_J ≤ 125°C, 2.5 V ≤ V_{IN} ≤ 6.5 V, $V_{(EN)}$ = V_{IN}, $R_{(ILIM)}$ = 49.9kΩ. Positive current are into pins. Typical value is at 25°C. All voltages are with respect to GND (unless otherwise noted).

PARAMETER		TEST CONDITIONS	MIN	TYP	MAX	UNIT
POWER SWITCH						
$R_{DS(on)}$	Input - Output Resistance(1)	T_J = 25°C		13	16	mΩ
		-40°C ≤ T_J ≤ 125°C			21	
ENABLE INPUT EN						
	EN turn on/off threshold		0.66		1.1	V
	Hysteresis			55(2)		mV
$I_{(EN)}$	Input current	$V_{(EN)}$ = 0 V or $V_{(EN)}$ = 6.5 V	–1		1	µA
CURRENT LIMIT						
I_{OS}	OUT short circuit current limit	$R_{(ILIM)}$ = 24.9 kΩ	4490	4731	4900	mA
		$R_{(ILIM)}$ = 44.2kΩ	2505	2665	2775	
		$R_{(ILIM)}$ = 49.9kΩ	2215	2360	2460	
		$R_{(ILIM)}$ = 61.9 kΩ	1780	1902	1990	
		$R_{(ILIM)}$ = 100 kΩ	1080	1176	1245	
		ILIM pin short to GND ($R_{(ILIM)}$ = 0)	5860	6650	7460	
SUPPLY CURRENT						
$I_{(IN_OFF)}$	Disabled, IN supply current	$V_{(EN)}$ = 0 V, No load on OUT		0.1	2	µA
$I_{(IN_ON)}$	Enabled, IN supply current	$R_{(ILIM)}$ = 100 kΩ, no load on OUT		97	125	µA
		$R_{(ILIM)}$ = 24.9 kΩ, no load on OUT		107	135	
$I_{(REV)}$	Reverse leakage current	V_{OUT} = 6.5 V, V_{IN} = 0 V, T_J = 25°C, Measure I_{OUT}		0.01	1	µA
UNDERVOLTAGE LOCKOUT						
V_{UVLO}	IN rising UVLO threshold voltage			2.36	2.45	V
	Hysteresis			35(2)		mV
$\overline{FAULT}$						
V_{OL}	Output low voltage	$I_{\overline{FAULT}}$ = 1 mA			180	mV
	Off-state leakage	$V_{\overline{FAULT}}$ = 6.5 V			1	µA
THERMAL SHUTDOWN						
OTSD2	Thermal shutdown threshold		155			°C
OTSD1	Thermal shutdown threshold in current-limit		135			
	Hysteresis			20 (2)		

(1) Pulse-testing techniques maintain junction temperature close to ambient temperature. Thermal effects must be taken into account separately
(2) These parameters are provided for reference only, and don't constitute part of TI's published device specifications for purposes of TI's product warranty.

8.6 Timing Requirements

Conditions are –40°C ≤ T_J = ≤ 125°C, 2.5 V ≤ V_{IN} ≤ 6.5 V, $V_{(EN)}$ = V_{IN}, $R_{(ILIM)}$ = 49.9kΩ. Positive current are into pins. Typical value is at 25°C. All voltages are with respect to GND (unless otherwise noted).

PARAMETER		TEST CONDITIONS		MIN	TYP	MAX	UNIT
POWER SWITCH							
t_r	OUT voltage rise time	V_{IN} = 6.5 V	C_L = 1 µF, R_L = 100 Ω, See Figure 13	2.6	3.65	5.2	ms
		V_{IN} = 2.5 V		1.3	2.6	3.9	
t_f	OUT voltage fall time	V_{IN} = 6.5 V		0.7	0.95	1.3	
		V_{IN} = 2.5 V		0.42	0.78	1.04	
ENABLE INPUT EN							
t_{on}	OUT voltage turn-on time	C_L = 1 µF, R_L = 100 Ω, See Figure 14				15	ms
t_{off}	OUT voltage turn-off time					8	
CURRENT LIMIT							
t_{IOS}	Short-circuit response time(1)	V_{IN} = 5 V, R_{SHORT} = 50 mΩ, See Figure 15			3.5(1)		µs
$\overline{\text{FAULT}}$							
	$\overline{\text{FAULT}}$ deglitch	$\overline{\text{FAULT}}$ assertion or de-assertion due to overcurrent condition		6	9.5	13	ms

(1) This parameter is provided for reference only and does not constitute part of TI's published device specifications for purposes of TI's product warranty

Copyright © 2014, Texas Instruments Incorporated

8.7 Typical Characteristics

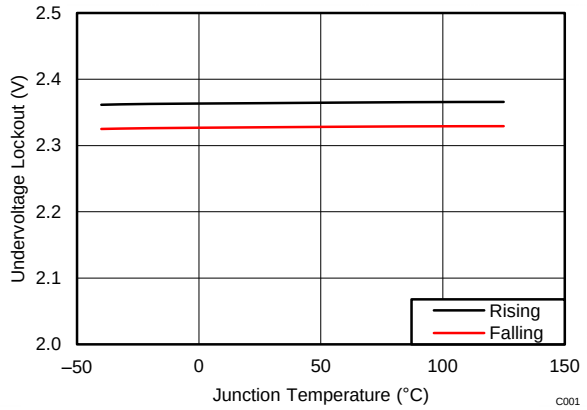

Figure 1. Under-voltage Lockout (UVLO) vs Temperature

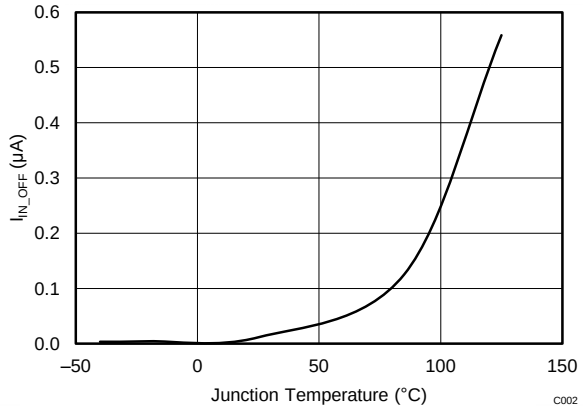

V_{IN} = 6.5 V

Figure 2. Supply Current, Output Disabled (I_{IN_OFF}) vs Temperature

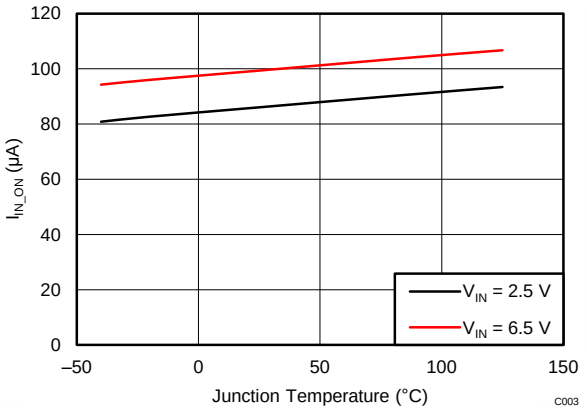

$R_{(ILIM)}$ = 100 KΩ

Figure 3. Supply Current, Output Enabled (I_{IN_ON}) vs Temperature

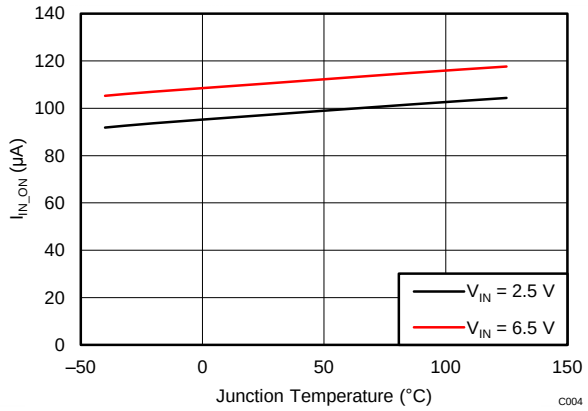

$R_{(ILIM)}$ = 24.9 KΩ

Figure 4. Supply Current, Output Enabled (I_{IN_ON}) vs Temperature

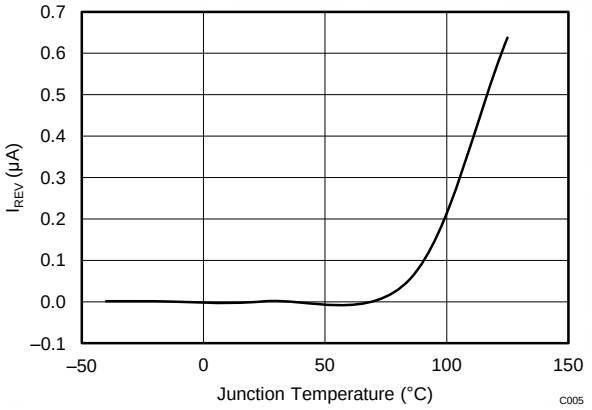

V_{OUT} = 6.5 V

Figure 5. Reverse Leakage Current (I_{REV}) v. Temperature

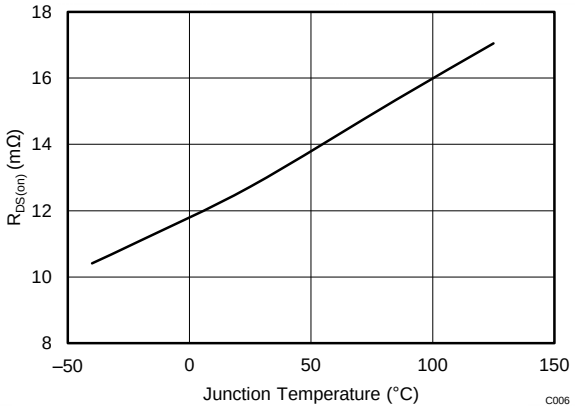

V_{IN} = 5 V

Figure 6. Input-Output Resistance ($R_{DS(on)}$) vs Temperature

Typical Characteristics (continued)

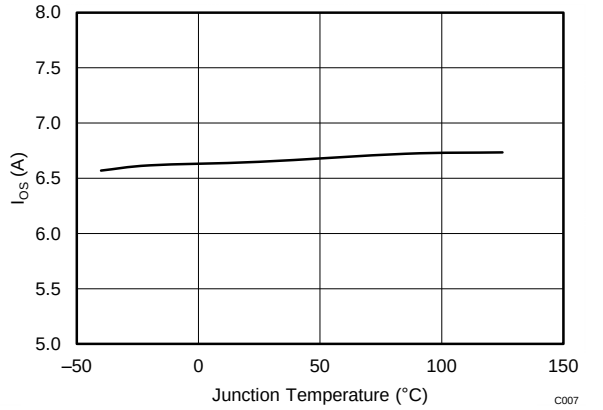

V_{IN} = 6.5 V ILIM pin short to GND

Figure 7. Short Circuit Current (I_{OS}) vs Temperature

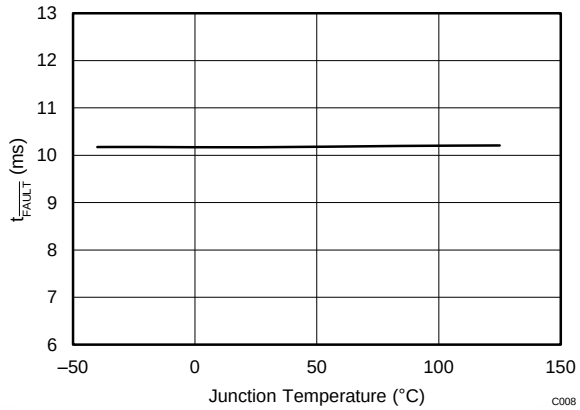

$V_{(\overline{FAULT})}$ = 2.5 V

Figure 8. Deglitch Time ($t_{\overline{FAULT}}$) vs Temperature

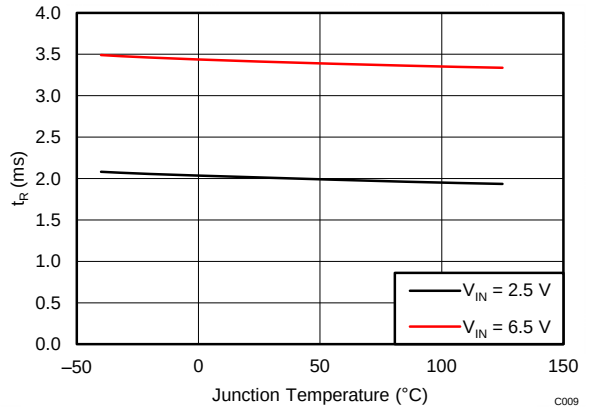

C_{OUT} = 1 µF $R_{(LOAD)}$ = 100 Ω

Figure 9. Output Rise Time (t_R) vs Temperature

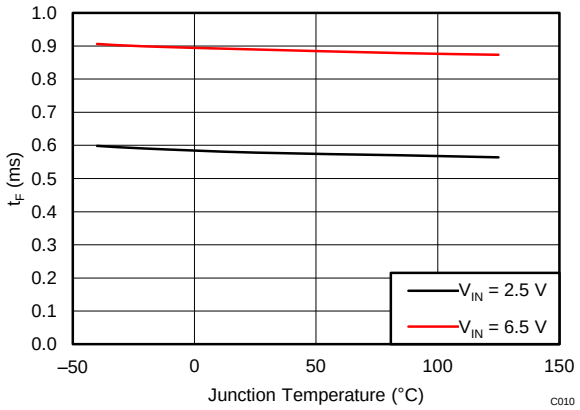

C_{OUT} = 1 µF $R_{(LOAD)}$ = 100 Ω

Figure 10. Output Fall Time (t_F) vs Temperature

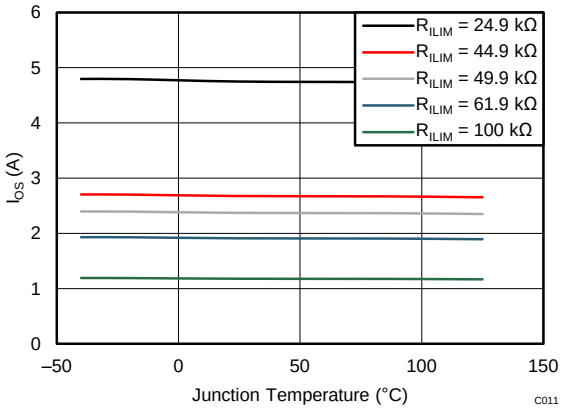

V_{IN} = 6.5 V

Figure 11. Short Circuit Current (I_{OS}) vs Temperature

Copyright © 2014, Texas Instruments Incorporated

9 Parameter Measurement Information

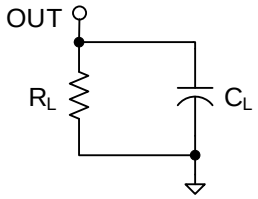

Figure 12. Output Rise/Fall time Test Load

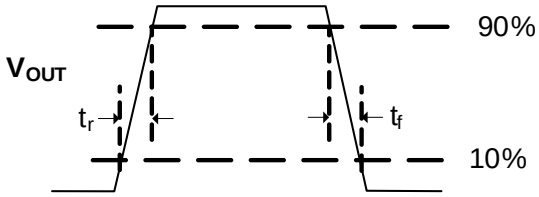

Figure 13. Power-On and Off Timing

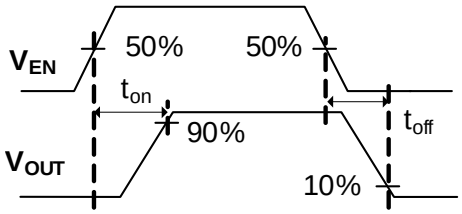

Figure 14. Enable Timing, Active High Enable

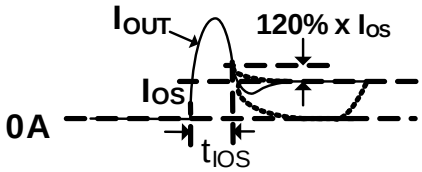

Figure 15. Output Short Circuit Parameters

10 Detailed Description

10.1 Overview

The TPS2559 is a current-limited, power-distribution switch using N-channel MOSFETs for applications where short circuits or heavy capacitive loads will be encountered. This device allows the user to program the current-limit via an external resistor and the maximum continuous output current up to 5.5 A. This device incorporates an internal charge pump and the gate drive circuitry necessary to drive the N-channel MOSFET. The charge pump supplies power to the driver circuit and provides the necessary voltage to pull the gate of the MOSFET above the source. The charge pump operates from input voltages as low as 2.5 V and requires little supply current. The driver controls the gate voltage of the power switch. The driver incorporates circuitry that controls the rise and fall times of the output voltage to limit large current and voltage surges and provides built-in soft-start functionality. The TPS2559 limits the output current to the programmed current-limit threshold IOS during an overcurrent or short-circuit event by reducing the charge pump voltage driving the N-channel MOSFET and operating it in the linear range of operation. The result of limiting the output current to IOS reduces the output voltage at OUT because N-channel MOSFET is no longer fully enhanced.

10.2 Functional Block Diagram

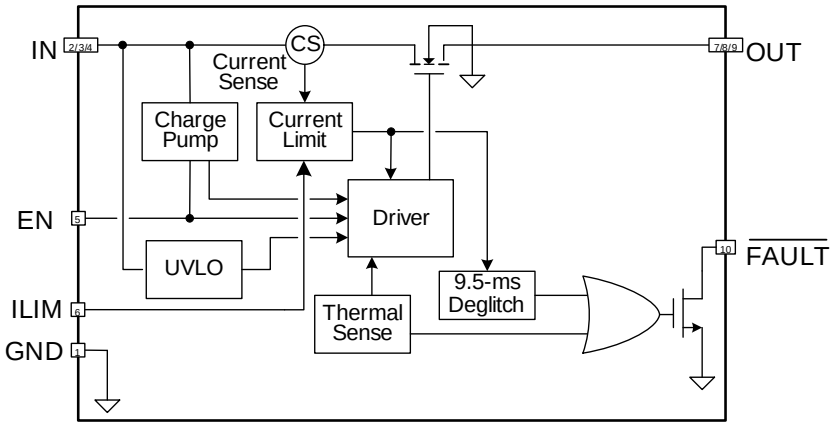

10.3 Feature Description

10.3.1 Thermal Sense

The TPS2559 self protects by using two independent thermal sensing circuits that monitor the operating temperature of the power switch and disable operation if the temperature exceeds recommended operating conditions. The TPS2559 device operates in constant-current mode during an over-current condition, which increases the voltage drop across power switch. The power dissipation in the package is proportional to the voltage drop across the power switch, which increases the junction temperature during an over-current condition. The first thermal sensor (OTSD1) turns off the power switch when the die temperature exceeds 135°C (min) and the part is in current limit. Hysteresis is built into the thermal sensor, and the switch turns on after the device has cooled approximately 20°C.

The TPS2559 also has a second ambient thermal sensor (OTSD2). The ambient thermal sensor turns off the power switch when the die temperature exceeds 155°C (min) regardless of whether the power switch is in current limit and will turn on the power switch after the device has cooled approximately 20°C. The TPS2559 continues to cycle off and on until the fault is removed.

Copyright © 2014, Texas Instruments Incorporated

Feature Description (continued)

10.3.2 Overcurrent Protection

The TPS2559 responds to overcurrent conditions by limiting their output current to IOS. When an overload condition is present, the device maintains a constant output current, with the output voltage determined by (I_{OS} × R_{LOAD}). Two possible overload conditions can occur.

The first condition is when a short circuit or partial short circuit is present when the device is powered-up or enabled. The output voltage is held near zero potential with respect to ground and the TPS2559 ramps the output current to I_{OS}. The TPS2559 limits the current to I_{OS} until the overload condition is removed or the device begins to thermal cycle (see Figure 24).

The second condition is when a short circuit, partial short circuit, or transient overload occurs while the device is enabled and powered on. The device responds to the overcurrent condition within time t_{IOS} (see Figure 15). The response speed and shape will vary with the overload level, input circuit, and rate of application. The current-limit response will vary between simply settling to I_{OS}, or turnoff and controlled return to IOS. Similar to the previous case, the TPS2559 limits the current to I_{OS} until the overload condition is removed or the device begins to thermal cycle.

The TPS2559 thermal cycles if an overload condition is present long enough to activate thermal limiting in any of the above cases. The device turns off when the junction temperature exceeds 135°C (min) while in current limit. The device remains off until the junction temperature cools 20°C (typ) and then restarts. The TPS2559 cycles on/off until the overload is removed (see Figure 25).

10.3.3 $\overline{\text{FAULT}}$ Response

The $\overline{\text{FAULT}}$ open-drain output is asserted (active low) during an over-current or over-temperature condition. The TPS2559 asserts the $\overline{\text{FAULT}}$ signal until the fault condition is removed and the device resumes normal operation. The TPS2559 is designed to eliminate false $\overline{\text{FAULT}}$ reporting by using an internal delay "deglitch" circuit for over-current (9-ms typ.) conditions without the need for external circuitry. This ensures that $\overline{\text{FAULT}}$ is not accidentally asserted due to normal operation such as starting into a heavy capacitive load. The deglitch circuitry delays entering and leaving current-limit induced fault conditions. The $\overline{\text{FAULT}}$ signal is not deglitched when the MOSFET is disabled due to an over-temperature condition but is deglitched after the device has cooled and begins to turn on. This unidirectional deglitch prevents $\overline{\text{FAULT}}$ oscillation during an over-temperature event.

10.4 Device Functional Modes

10.4.1 Operation with V_{IN} Undervoltage Lockout (UVLO) Control

The undervoltage lockout (UVLO) circuit disables the power switch until the input voltage reaches the UVLO turn-on threshold. Built-in hysteresis prevents unwanted on/off cycling due to input voltage droop during turn on.

10.4.2 Operation with EN Control

The logic enable controls the power switch and device supply current. The supply current is reduced to less than 2-µA when a logic low is present on EN. A logic high input on EN enables the driver, control circuits, and power switch. The enable input is compatible with both TTL and CMOS logic levels.

Copyright © 2014, Texas Instruments Incorporated

11 Application and Implementation

11.1 Application Information

The TPS2559 current limited power switch uses N-channel MOSFETs in applications requiring up to 5.5 A of continuous load current. The device enters constant-current mode when the load exceeds the current limit threshold.

The TPS2559 power switch is used to protect the up-stream power supply when the output is overloaded.

11.2 Typical Application

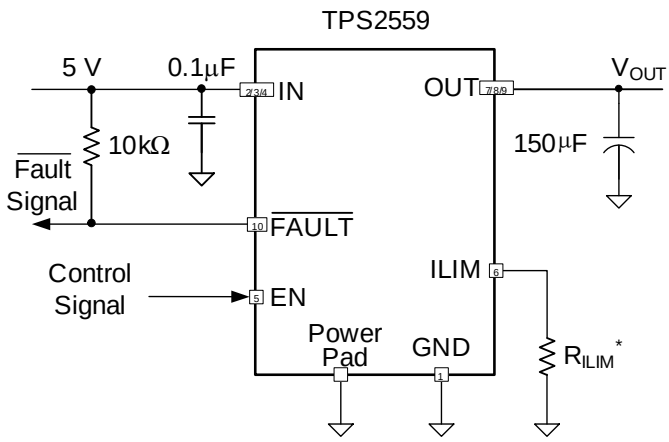

Figure 16. Typical TPS2559 Power Switch

Use the I_{OS} in the *Electrical Characteristics* table or I_{OS} in Equation 1 to select the R_{ILIM}.

11.2.1 Design Requirements

For this design example, use the following as the input parameters.

DESIGN PARAMETERS	EXAMPLE VALUE
Input Operation Voltage	5 V
Rating Current	3A or 4.5A
Minimum Current Limit	3A
Maximum Current Limit	5A

When choose power switch, there are some several general steps:

1. What is the power rail, 3.3 V or 5 V, and then choose the operation range of power switch can cover the power rail.
2. What is the normal operation current, for example, the maximum allowable current drawn by portable equipment for USB 2.0 port is 500mA, so the normal operation current is 500mA and the minimum current limit of power switch must exceed 500 mA to avoid false trigger during normal operation.
3. What is the maximum allowable current provided by up-stream power, and then decide the maximum current limit of power switch that must lower it to ensure power switch can protect the up-stream power when over-load is encountered at the output of power switch.

NOTE

Choosing power switch with tighter current limit tolerance can loosen the up-stream power supply design.

Copyright © 2014, Texas Instruments Incorporated

11.2.2 Detailed Design Procedure

11.2.2.1 Step by Step Design Procedure

To begin the design process a few parameters must be decided upon. The designer needs to know the following:

- Normal Input Operation Voltage
- Rating Current
- Minimum Current Limit
- Maximum Current Limit

11.2.2.2 Input and Output Capacitance

Input and output capacitance improves the performance of the device; the actual capacitance should be optimized for the particular application. For all applications, a 0.1µF or greater ceramic bypass capacitor between IN and GND is recommended as close to the device as possible for local noise decoupling. This precaution reduces ringing on the input due to power-supply transients. Additional input capacitance may be needed on the input to reduce voltage undershoot from exceeding the UVLO of other load share one power rail with TPS2559 or overshoot from exceeding the absolute-maximum voltage of the device during heavy transient conditions. This is especially important during bench testing when long, inductive cables are used to connect the evaluation board to the bench power supply.

Output capacitance is not required, but placing a high-value electrolytic capacitor on the output pin is recommended when large transient currents are expected on the output to reduce the undershoot, which caused by the inductance of the output power bus just after a short has occurred and the TPS2559 has abruptly reduced OUT current. Energy stored in the inductance will drive the OUT voltage down and potentially negative as it discharges.

11.2.2.3 Programming the Current-Limit Threshold

The overcurrent threshold is user programmable via an external resistor. The TPS2559 uses an internal regulation loop to provide a regulated voltage on the ILIM pin. The current-limit threshold is proportional to the current sourced out of ILIM. The recommended 1% resistor range for $R_{(ILIM)}$ is 24.9 kΩ ≤ $R_{(ILIM)}$ ≤ 100 kΩ to ensure stability of the internal regulation loop.

When ILIM pin short to GND (single point failure), maximum current limit is less than 8 A over temperature and process variation.

Many applications require that the minimum current limit is above a certain current level or that the maximum current limit is below a certain current level, so it is important to consider the tolerance of the overcurrent threshold when selecting a value for $R_{(ILIM)}$. The equations and the graph below can be used to estimate the minimum and maximum variation of the current-limit threshold for a predefined resistor value within $R_{(ILIM)}$ is 24.9 kΩ ≤ $R_{(ILIM)}$ ≤ 100 kΩ. This variation is an approximation only and does not take into account, for example, the resistor tolerance. For examples of more-precise variation of I_{OS} refer to the current-limit section of the *Electrical Characteristics* table.

$$I_{OSmax}(mA) = \frac{121635\ V}{R_{(ILIM)}^{1.0013} k\Omega} + 36$$

$$I_{OSnom}(mA) = \frac{118079\ V}{R_{(ILIM)}^{1.0008} k\Omega}$$

$$I_{OSmin}(mA) = \frac{113325\ V}{R_{(ILIM)}^{1.0010} k\Omega} - 47 \quad (1)$$

24.9 kΩ ≤ $R_{(ILIM)}$ ≤ 100 kΩ

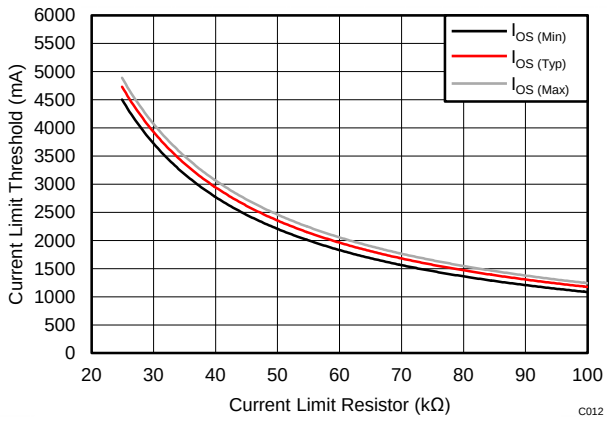

Figure 17. Current-Limit vs $R_{(ILIM)}$

11.2.2.4 Design Above a Minimum Current Limit

Some applications require that current limiting cannot occur below a certain threshold. For this example, assume that 3 A must be delivered to the load so that the minimum desired current-limit threshold is 3000 mA. Use the I_{OS} equations and Figure 17 to select $R_{(ILIM)}$.

$$I_{OS\,min}(mA) = 3000\ mA$$

$$I_{OS\,min}(mA) = \frac{113325\ V}{R_{(ILIM)}{}^{1.0010} k\Omega} - 47$$

$$R_{(ILIM)}(k\Omega) = \left(\frac{113325}{I_{OS(min)} + 47}\right)^{\frac{1}{1.0010}} = \left(\frac{113325}{3000 + 47}\right)^{\frac{1}{1.0010}} = 37.06\ k\Omega \tag{2}$$

Select the closest 1% resistor less than the calculated value: $R_{(ILIM)}$ = 36.5 kΩ. This sets the minimum current-limit threshold at 3016 A.

$$I_{OS\,min}(mA) = \frac{113325\ V}{R_{(ILIM)}{}^{1.0010} k\Omega} - 47 = \frac{113325}{(36.5 \times 1.01)^{1.0010}} - 47 = 3016\ mA \tag{3}$$

Use the I_{OS} equations, Figure 17, and the previously calculated value for $R_{(ILIM)}$ to calculate the maximum resulting current-limit threshold.

$$I_{OS\,max}(mA) = \frac{121635}{R_{(ILIM)}{}^{1.0013}} + 36 = \frac{121635}{(36.5 \times 0.99)^{1.0013}} + 36 = 3387\ mA \tag{4}$$

The resulting maximum current-limit threshold minimum is 3016 mA and maximum is 3387 mA with a 36.5 kΩ ± 1%.

11.2.2.5 Design Below a Maximum Current Limit

Some applications require that current limiting must occur below a certain threshold. For this example, assume that 5A must be delivered to the load so that the minimum desired current-limit threshold is 5000 mA. Use the I_{OS} equations and Figure 17 to select $R_{(ILIM)}$.

$$I_{OS\,max}(mA) = 5000\ mA$$

$$I_{OS\,max}(mA) = \frac{121635}{R_{(ILIM)}{}^{1.0013} k\Omega} + 36$$

$$R_{(ILIM)}(k\Omega) = \left(\frac{121635}{I_{OS(max)}}\right)^{\frac{1}{1.0013}} = \left(\frac{121635}{5000 - 36}\right)^{\frac{1}{1.0013}} = 24.4\ k\Omega \tag{5}$$

Copyright © 2014, Texas Instruments Incorporated

Select the closest 1% resistor less than the calculated value: R_{ILIM} = 24.9 kΩ. This sets the maximum current-limit threshold at 4950 A.

$$I_{OS\,max}(mA) = \frac{121635}{R_{(ILIM)}^{1.0013} k\Omega} + 36 = \frac{121635}{(24.9 \times 0.99)^{1.0013}} + 36 = 4950\ mA \tag{6}$$

Use the I_{OS} equations, Figure 17, and the previously calculated value for $R_{(ILIM)}$ to calculate the minimum resulting current-limit threshold.

$$I_{OS\,min}(mA) = \frac{113325}{R_{(ILIM)}^{1.0010}} - 47 = \frac{113325}{(24.9 \times 1.01)^{1.0010}} - 47 = 4445\ mA \tag{7}$$

The resulting minimum current-limit threshold minimum is 4445 mA and maximum is 4950 mA with a 24.9 kΩ ± 1%.

11.2.2.6 Accounting for Resistor Tolerance

The previous sections described the selection of $R_{(ILIM)}$ given certain application requirements and the importance of understanding the current-limit threshold tolerance. The analysis focused only on the TPS2559 is bounded by an upper and lower tolerance centered on a nominal resistance. The additional R_{ILIM} resistance tolerance directly affects the current-limit threshold accuracy at a system level. Table 1 shows a process that accounts for worst-case resistor tolerance assuming 1% resistor values.

Step one follows the selection process outlined in the application examples above.

Step two determines the upper and lower resistance bounds of the selected resistor.

Step three uses the upper and lower resistor bounds in the IOS equations to calculate the threshold limits.

It is important to use tighter tolerance resistors, that is, 0.5% or 0.1%, when precision current limiting is desired.

Table 1. Common $R_{(ILIM)}$ Resistor Selections

DESIRED NOMINAL CURRENT LIMIT (mA)		IDEAL RESISTOR (kΩ)	CLOSEST 1% RESISTOR (kΩ)	RESISTOR TOLERANCE			ACTUAL LIMITS		
				1% LOW (kΩ)	1% HIGH (kΩ)		I_{OS} MIN (mA)	I_{OS} NOM (mA)	I_{OS} MAX (mA)
1250		94.1	93.1	92.2	94		1153	1264	1348
1500		78.4	78.7	77.9	79.5		1372	1495	1588
1750		67.2	66.5	65.8	67.2		1633	1770	1874
2000		58.8	59	58.4	59.6		1847	1995	2107
2250		52.3	52.3	51.8	52.8		2090	2551	2373
2500		47.1	47.5	47	48		2306	2478	2610
2750		42.8	43.2	42.8	43.6		2541	2725	2866
3000		39.2	39.2	38.8	39.6		2805	3003	3155
3250		36.2	36.5	36.1	36.9		3016	3226	3386
3500		33.6	34	33.7	34.3		3241	3463	3633
3750		31.4	31.6	31.3	31.9		3491	3726	3907
4000		29.4	29.4	29.1	29.7		3757	4005	4197
4250		27.7	28	27.7	28.3		3947	4206	4405
4500		26.1	26.1	25.8	26.4		4238	4512	4724
4750		24.8	24.9	24.7	25.1		4445	4730	4950

Copyright © 2014, Texas Instruments Incorporated

11.2.2.7 Power Dissipation and Junction Temperature

The low on-resistance of the N-channel MOSFET allows small surface-mount packages to pass large currents. It is good design practice to estimate power dissipation and junction temperature. The below analysis gives an approximation for calculating junction temperature based on the power dissipation in the package. However, it is important to note that thermal analysis is strongly dependent on additional system level factors. Such factors include air flow, board layout, copper thickness and surface area, and proximity to other devices dissipating power. Good thermal design practice must include all system level factors in addition to individual component analysis. Begin by determining the $r_{DS(on)}$ of the N-channel MOSFET relative to the input voltage and operating temperature. As an initial estimate, use the highest operating ambient temperature of interest and read $r_{DS(on)}$ from the typical characteristics graph. Using this value, the power dissipation can be calculated by:

$$P_D = r_{DS(on)} \times I_{OUT}^2$$

Where:

P_D = Total power dissipation (W)
$r_{DS(on)}$ = Power switch on-resistance (Ω)
I_{OUT} = Maximum current-limit threshold (A)

This step calculates the total power dissipation of the N-channel MOSFET.

Finally, calculate the junction temperature:

$$T_J = P_D \times \theta_{JA} + T_A$$

Where:

T_A = Ambient temperature (°C)
θ_{JA} = Thermal resistance (°C/W)
P_D = Total power dissipation (W)

Compare the calculated junction temperature with the initial estimate. If they are not within a few degrees, repeat the calculation using the "refined" $r_{DS(on)}$ from the previous calculation as the new estimate. Two or three iterations are generally sufficient to achieve the desired result. The final junction temperature is highly dependent on thermal resistance θ_{JA} and thermal resistance is highly dependent on the individual package and board layout.

11.2.2.8 Auto-Retry

Some applications require that an overcurrent condition disables the part momentarily during a fault condition and re-enables after a pre-set time. This *auto-retry* functionality can be implemented with an external resistor and capacitor. During a fault condition, $\overline{FAULT}$ pulls low EN. The part is disabled when EN is pulled below the turn-off threshold, and $\overline{FAULT}$ goes high impedance allowing $C_{(RETRY)}$ to begin charging. The part re-enables when the voltage on EN reaches the turn-on threshold. The part will continue to cycle in this manner until the fault condition is removed. The auto-retry cycling time is determined by the resistor/capacitor time constant, TPS2559 turn on time and $\overline{FAULT}$ deglitch time (see Figure 28).

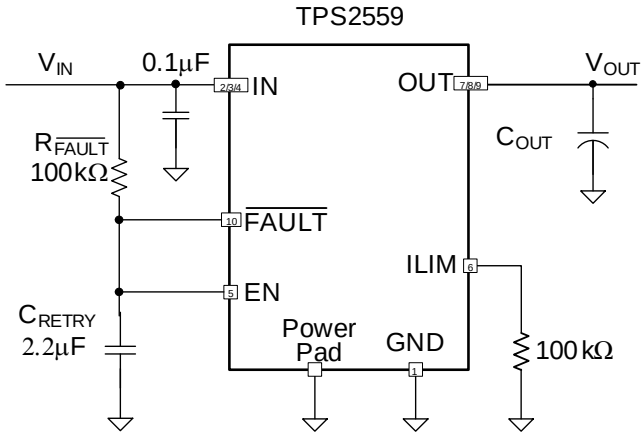

Figure 18. Auto-Retry Circuit

Copyright © 2014, Texas Instruments Incorporated

Some applications require auto-retry functionality and the ability to enable/disable with an external logic signal. Figure 19 shows how an external logic signal can drive EN through $R_{(\overline{FAULT})}$ and maintain auto-retry functionality. The resistor/capacitor time constant determines the auto-retry time-out period.

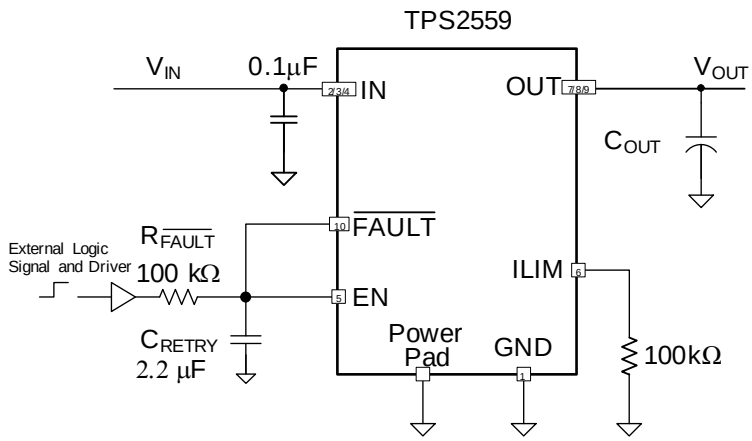

Figure 19. Auto-Retry Circuit with External EN Signal

If need to implement latch-off, refer to application report (SLVA282A).

11.2.2.9 Two-level Current-limit

Some applications require different current-limit thresholds depending on external system conditions. Figure 20 shows an implementation for an externally-controlled, two-level current-limit circuit. The current-limit threshold is set by the total resistance from ILIM to GND (see previously discussed *Programming the Current-Limit Threshold* section). A logic-level input enables/disables MOSFET Q1 and changes the current-limit threshold by modifying the total resistance from ILIM to GND (see Figure 29 and Figure 30). Additional MOSFET/resistor combinations can be used in parallel to Q1/R2 to increase the number of additional current-limit levels.

NOTE

ILIM should never be driven directly with an external signal.

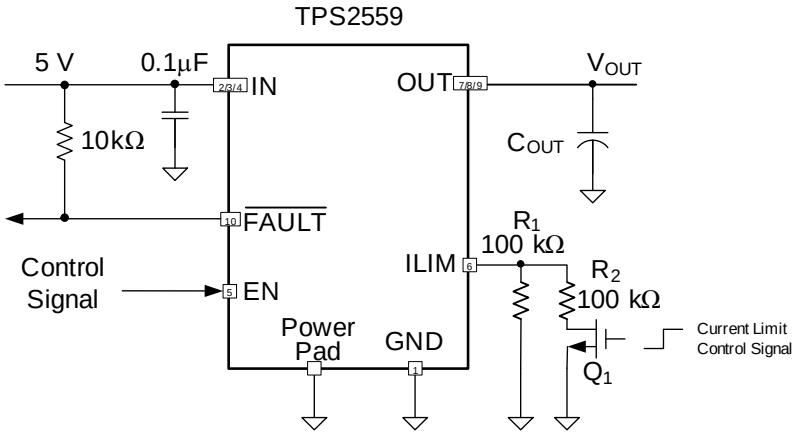

Figure 20. Two-Level Current-Limit Circuit

11.2.3 Application Curves

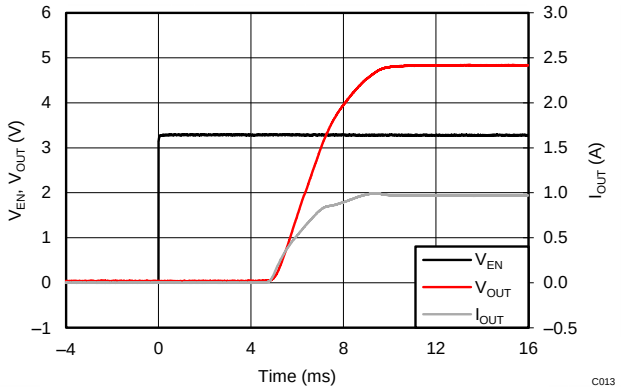

Figure 21. Output Rise with 150µF // 5Ω

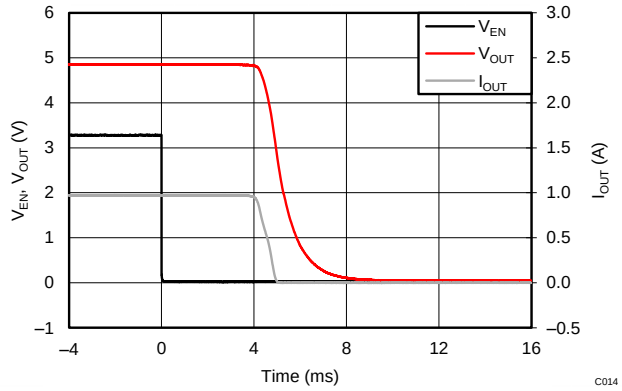

Figure 22. Output Fall with 150µF // 5Ω

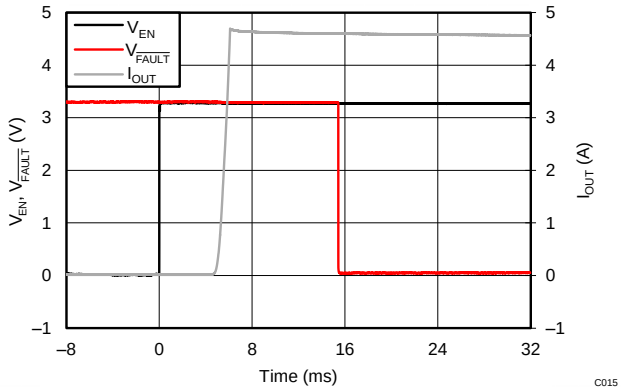

Figure 23. Enable into Output Short

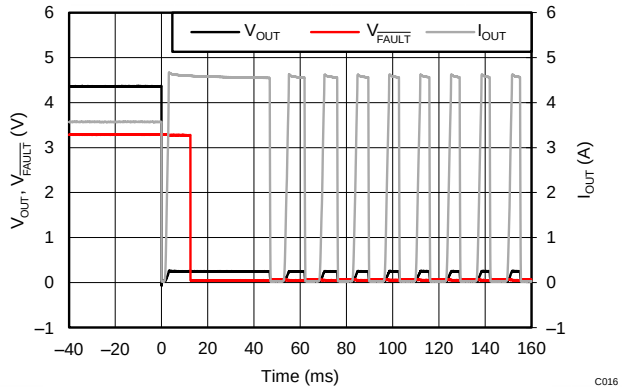

Figure 24. Full Load to Output Short Transient Response

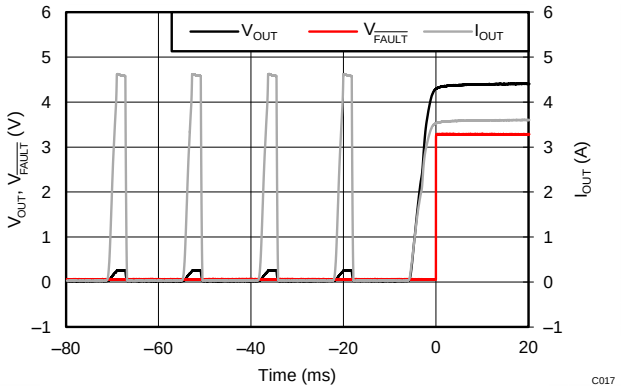

Figure 25. Output Short to Full Load Recovery Response

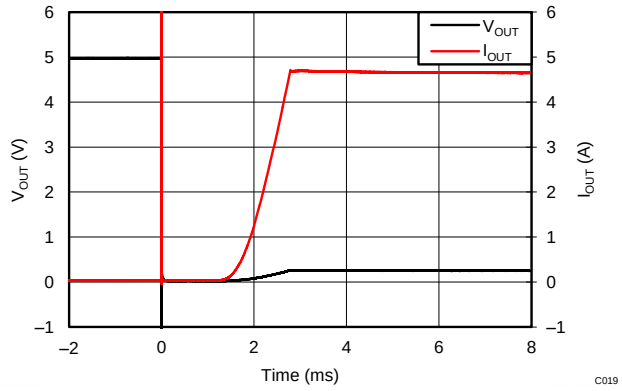

Figure 26. 50mΩ Hot-Short

Copyright © 2014, Texas Instruments Incorporated

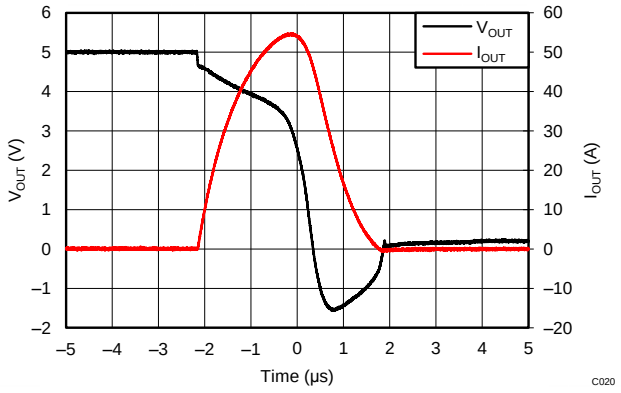

Figure 27. 50mΩ Hot-Short Response Time

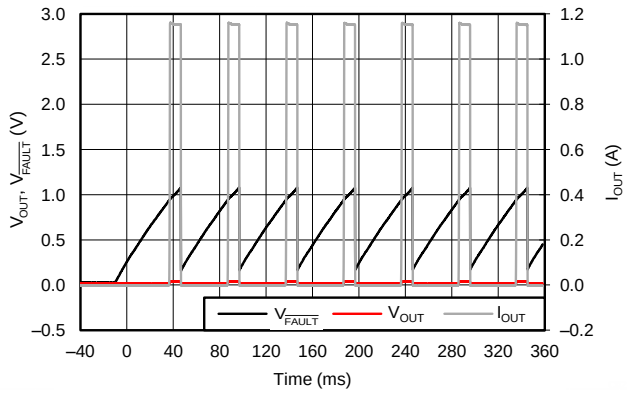

Figure 28. Auto-Retry Cycle

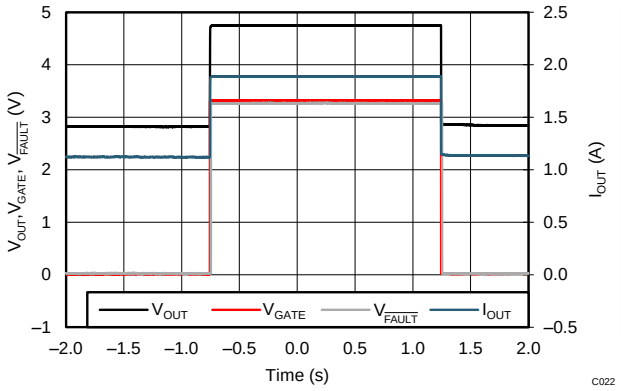

Figure 29. Two Level Current Limit with R_{LOAD} = 2.5 Ω

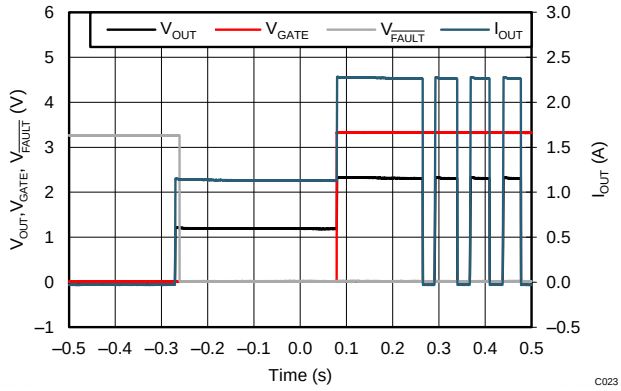

Figure 30. Two Level Current Limit with R_{LOAD} = 1Ω

12 Power Supply Recommendations

Design of the devices is for operation from an input voltage supply range of 2.5 V to 6.5 V. The current capability of the power supply should exceed the maximum current limit of the power switch.

13 Layout

13.1 Layout Guidelines

- Place the 100-nF bypass capacitor near the IN and GND pins, and make the connections using a low-inductance trace.
- Placing a high-value electrolytic capacitor and a 100-nF bypass capacitor on the output pin is recommended when large transient currents are expected on the output.
- The traces routing the R_{ILIM} resistor to the device should be as short as possible to reduce parasitic effects on the current limit accuracy.
- The PowerPAD should be directly connected to PCB ground plane using wide and short copper trace.

13.2 Layout Example

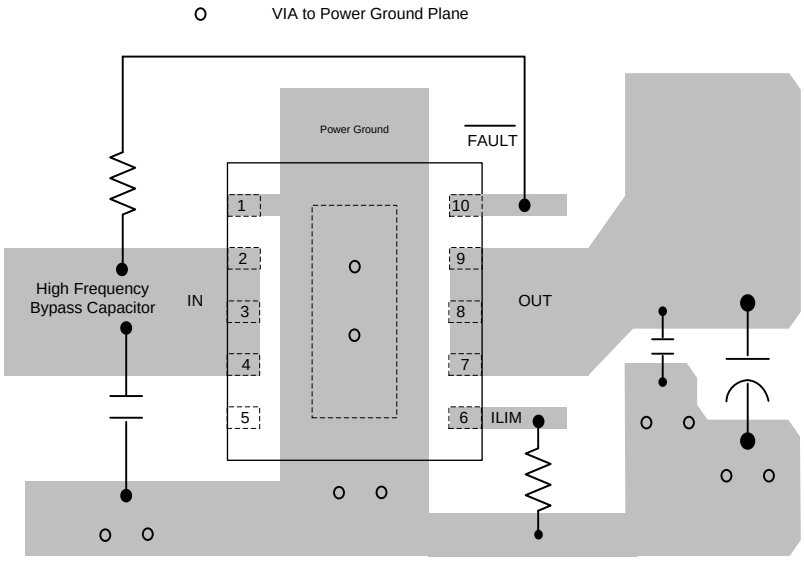

Figure 31. TPS2559 Board Layout

Copyright © 2014, Texas Instruments Incorporated

14 Device and Documentation Support

14.1 Trademarks

PowerPAD is a trademark of Texas Instruments.

14.2 Electrostatic Discharge Caution

These devices have limited built-in ESD protection. The leads should be shorted together or the device placed in conductive foam during storage or handling to prevent electrostatic damage to the MOS gates.

14.3 Glossary

SLYZ022 — *TI Glossary*.

This glossary lists and explains terms, acronyms and definitions.

15 Mechanical, Packaging, and Orderable Information

The following pages include mechanical, packaging, and orderable information. This information is the most current data available for the designated devices. This data is subject to change without notice and revision of this document. For browser-based versions of this data sheet, refer to the left-hand navigation.

PACKAGING INFORMATION

Orderable Device	Status (1)	Package Type	Package Drawing	Pins	Package Qty	Eco Plan (2)	Lead/Ball Finish (6)	MSL Peak Temp (3)	Op Temp (°C)	Device Marking (4/5)	Samples
TPS2559DRCR	ACTIVE	VSON	DRC	10	3000	Green (RoHS & no Sb/Br)	CU NIPDAU	Level-2-260C-1 YEAR	-40 to 125	2559	Samples
TPS2559DRCT	ACTIVE	VSON	DRC	10	250	Green (RoHS & no Sb/Br)	CU NIPDAU	Level-2-260C-1 YEAR	-40 to 125	2559	Samples

(1) The marketing status values are defined as follows:
ACTIVE: Product device recommended for new designs.
LIFEBUY: TI has announced that the device will be discontinued, and a lifetime-buy period is in effect.
NRND: Not recommended for new designs. Device is in production to support existing customers, but TI does not recommend using this part in a new design.
PREVIEW: Device has been announced but is not in production. Samples may or may not be available.
OBSOLETE: TI has discontinued the production of the device.

(2) Eco Plan - The planned eco-friendly classification: Pb-Free (RoHS), Pb-Free (RoHS Exempt), or Green (RoHS & no Sb/Br) - please check http://www.ti.com/productcontent for the latest availability information and additional product content details.
TBD: The Pb-Free/Green conversion plan has not been defined.
Pb-Free (RoHS): TI's terms "Lead-Free" or "Pb-Free" mean semiconductor products that are compatible with the current RoHS requirements for all 6 substances, including the requirement that lead not exceed 0.1% by weight in homogeneous materials. Where designed to be soldered at high temperatures, TI Pb-Free products are suitable for use in specified lead-free processes.
Pb-Free (RoHS Exempt): This component has a RoHS exemption for either 1) lead-based flip-chip solder bumps used between the die and package, or 2) lead-based die adhesive used between the die and leadframe. The component is otherwise considered Pb-Free (RoHS compatible) as defined above.
Green (RoHS & no Sb/Br): TI defines "Green" to mean Pb-Free (RoHS compatible), and free of Bromine (Br) and Antimony (Sb) based flame retardants (Br or Sb do not exceed 0.1% by weight in homogeneous material)

(3) MSL, Peak Temp. - The Moisture Sensitivity Level rating according to the JEDEC industry standard classifications, and peak solder temperature.

(4) There may be additional marking, which relates to the logo, the lot trace code information, or the environmental category on the device.

(5) Multiple Device Markings will be inside parentheses. Only one Device Marking contained in parentheses and separated by a "~" will appear on a device. If a line is indented then it is a continuation of the previous line and the two combined represent the entire Device Marking for that device.

(6) Lead/Ball Finish - Orderable Devices may have multiple material finish options. Finish options are separated by a vertical ruled line. Lead/Ball Finish values may wrap to two lines if the finish value exceeds the maximum column width.

Important Information and Disclaimer: The information provided on this page represents TI's knowledge and belief as of the date that it is provided. TI bases its knowledge and belief on information provided by third parties, and makes no representation or warranty as to the accuracy of such information. Efforts are underway to better integrate information from third parties. TI has taken and continues to take reasonable steps to provide representative and accurate information but may not have conducted destructive testing or chemical analysis on incoming materials and chemicals. TI and TI suppliers consider certain information to be proprietary, and thus CAS numbers and other limited information may not be available for release.

In no event shall TI's liability arising out of such information exceed the total purchase price of the TI part(s) at issue in this document sold by TI to Customer on an annual basis.

OTHER QUALIFIED VERSIONS OF TPS2559 :

- Automotive: TPS2559-Q1

NOTE: Qualified Version Definitions:

- Automotive - Q100 devices qualified for high-reliability automotive applications targeting zero defects

TAPE AND REEL INFORMATION

REEL DIMENSIONS

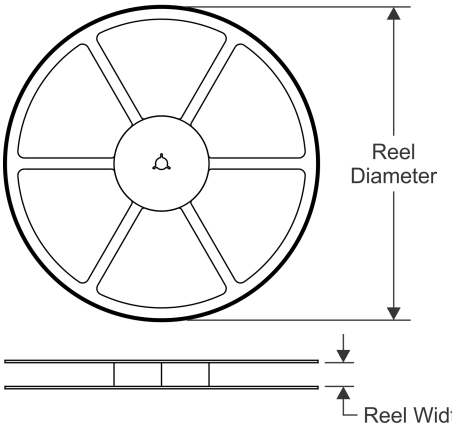

TAPE DIMENSIONS

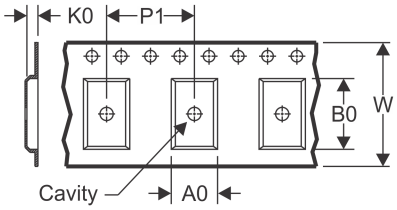

A0	Dimension designed to accommodate the component width
B0	Dimension designed to accommodate the component length
K0	Dimension designed to accommodate the component thickness
W	Overall width of the carrier tape
P1	Pitch between successive cavity centers

QUADRANT ASSIGNMENTS FOR PIN 1 ORIENTATION IN TAPE

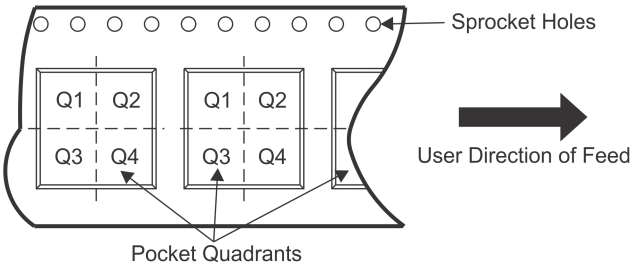

*All dimensions are nominal

Device	Package Type	Package Drawing	Pins	SPQ	Reel Diameter (mm)	Reel Width W1 (mm)	A0 (mm)	B0 (mm)	K0 (mm)	P1 (mm)	W (mm)	Pin1 Quadrant
TPS2559DRCR	VSON	DRC	10	3000	180.0	12.5	3.3	3.3	1.1	8.0	12.0	Q2
TPS2559DRCR	VSON	DRC	10	3000	330.0	12.4	3.3	3.3	1.1	8.0	12.0	Q2
TPS2559DRCT	VSON	DRC	10	250	180.0	12.4	3.3	3.3	1.1	8.0	12.0	Q2
TPS2559DRCT	VSON	DRC	10	250	180.0	12.5	3.3	3.3	1.1	8.0	12.0	Q2

TAPE AND REEL BOX DIMENSIONS

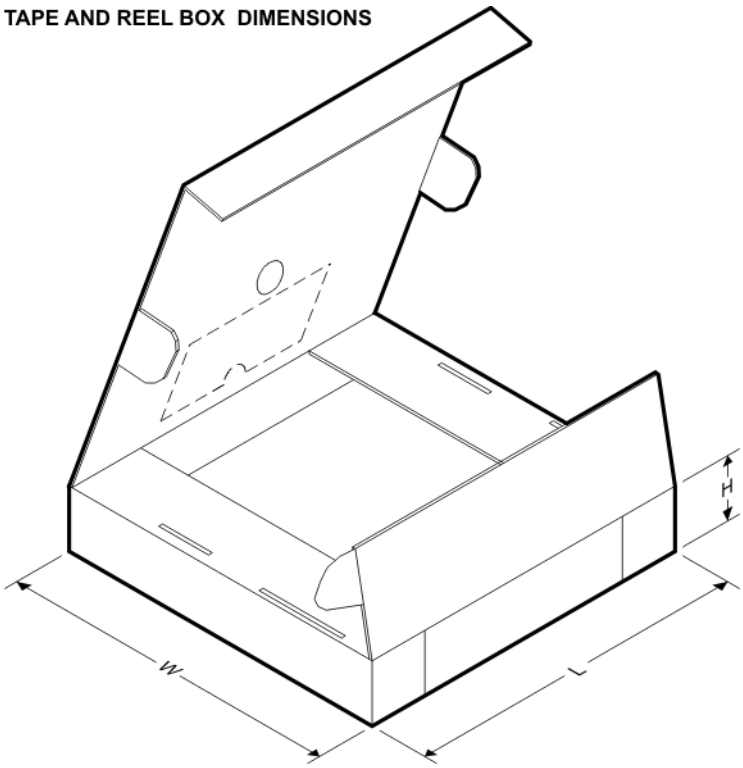

*All dimensions are nominal

Device	Package Type	Package Drawing	Pins	SPQ	Length (mm)	Width (mm)	Height (mm)
TPS2559DRCR	VSON	DRC	10	3000	338.0	355.0	50.0
TPS2559DRCR	VSON	DRC	10	3000	367.0	367.0	35.0
TPS2559DRCT	VSON	DRC	10	250	210.0	185.0	35.0
TPS2559DRCT	VSON	DRC	10	250	338.0	355.0	50.0

DRC (S-PVSON-N10) PLASTIC SMALL OUTLINE NO-LEAD

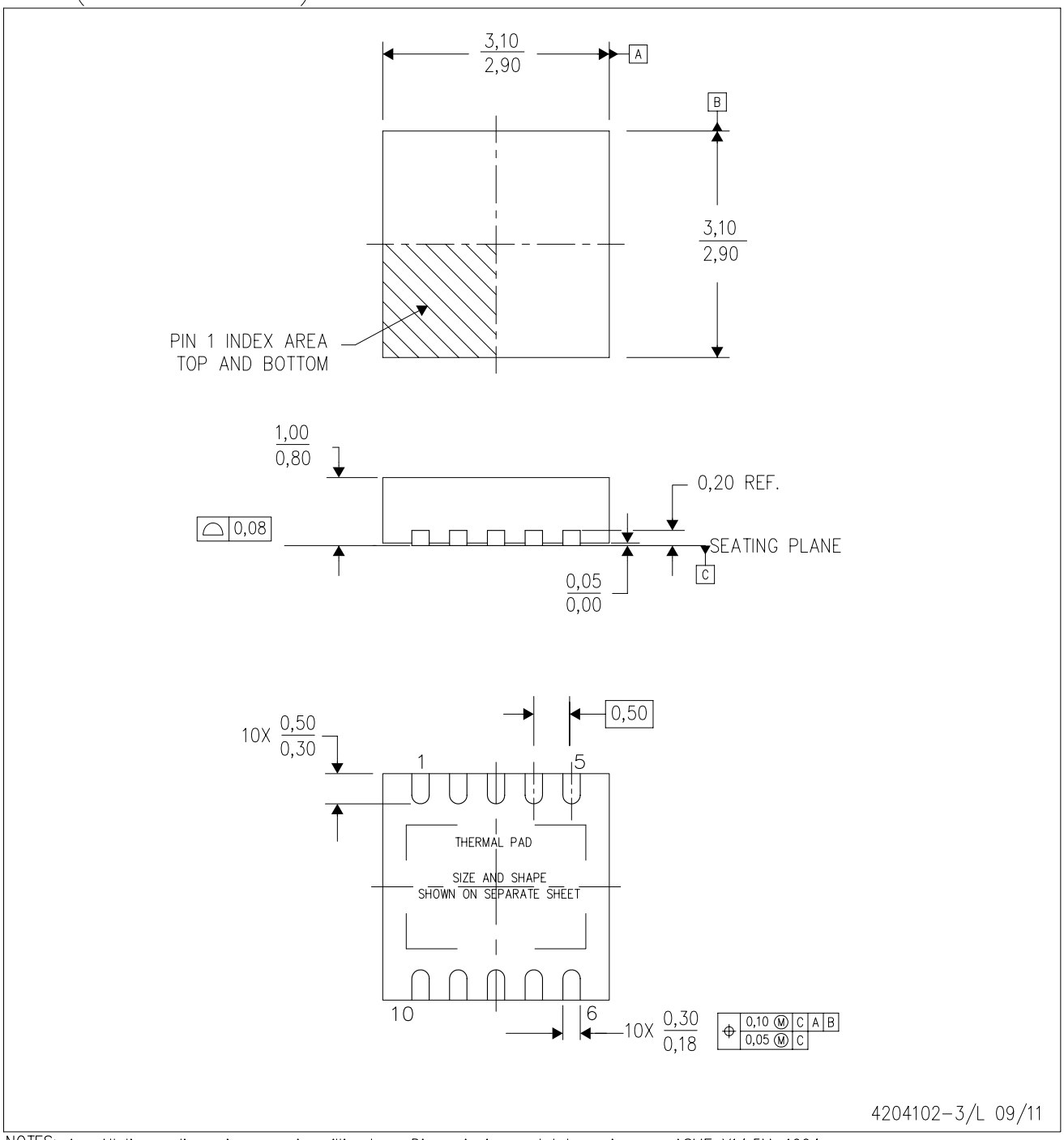

NOTES:
A. All linear dimensions are in millimeters. Dimensioning and tolerancing per ASME Y14.5M-1994.
B. This drawing is subject to change without notice.
C. Small Outline No-Lead (SON) package configuration.
D. The package thermal pad must be soldered to the board for thermal and mechanical performance, if present.
E. See the additional figure in the Product Data Sheet for details regarding the exposed thermal pad features and dimensions, if present

DRC (S–PVSON–N10) PLASTIC SMALL OUTLINE NO–LEAD

THERMAL INFORMATION

This package incorporates an exposed thermal pad that is designed to be attached directly to an external heatsink. The thermal pad must be soldered directly to the printed circuit board (PCB). After soldering, the PCB can be used as a heatsink. In addition, through the use of thermal vias, the thermal pad can be attached directly to the appropriate copper plane shown in the electrical schematic for the device, or alternatively, can be attached to a special heatsink structure designed into the PCB. This design optimizes the heat transfer from the integrated circuit (IC).

For information on the Quad Flatpack No–Lead (QFN) package and its advantages, refer to Application Report, QFN/SON PCB Attachment, Texas Instruments Literature No. SLUA271. This document is available at www.ti.com.

The exposed thermal pad dimensions for this package are shown in the following illustration.

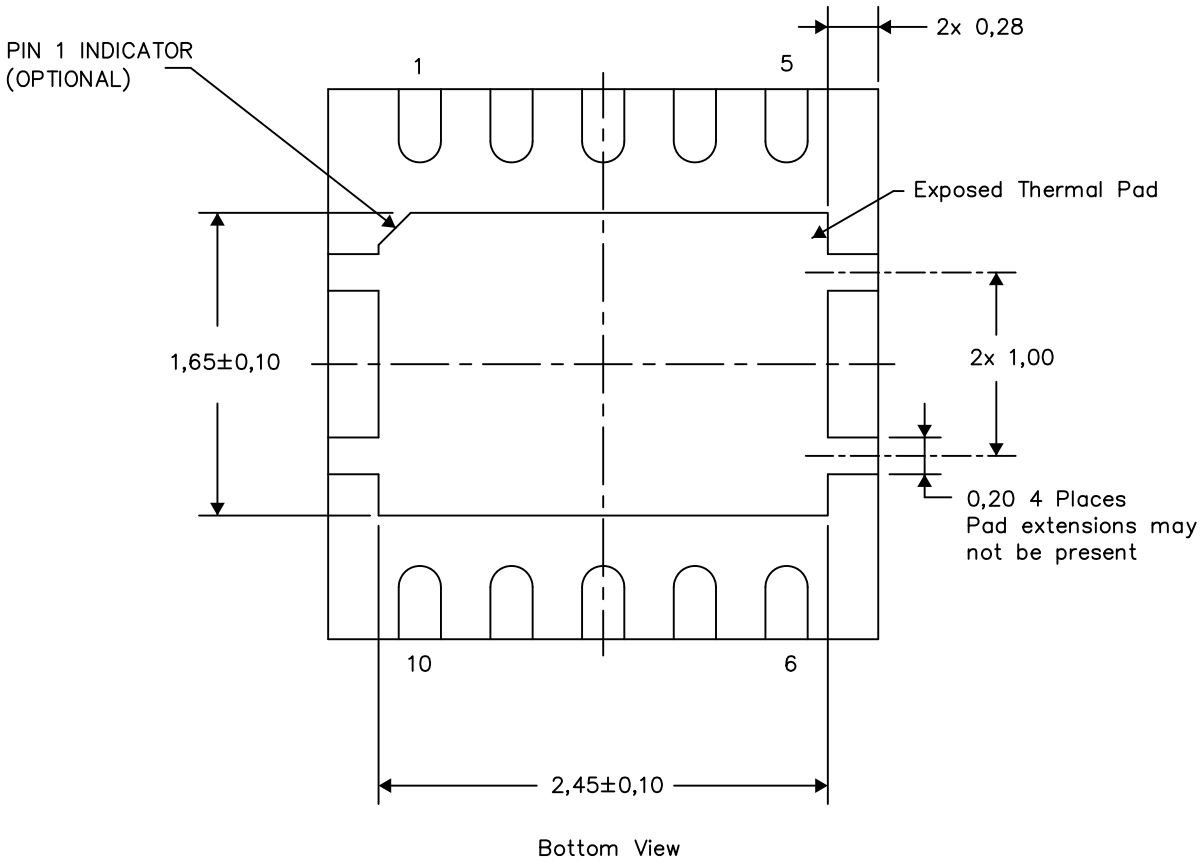

Exposed Thermal Pad Dimensions

4206565–10/Y 08/15

NOTE: A. All linear dimensions are in millimeters

DRC (S-PVSON-N10) PLASTIC SMALL OUTLINE NO-LEAD

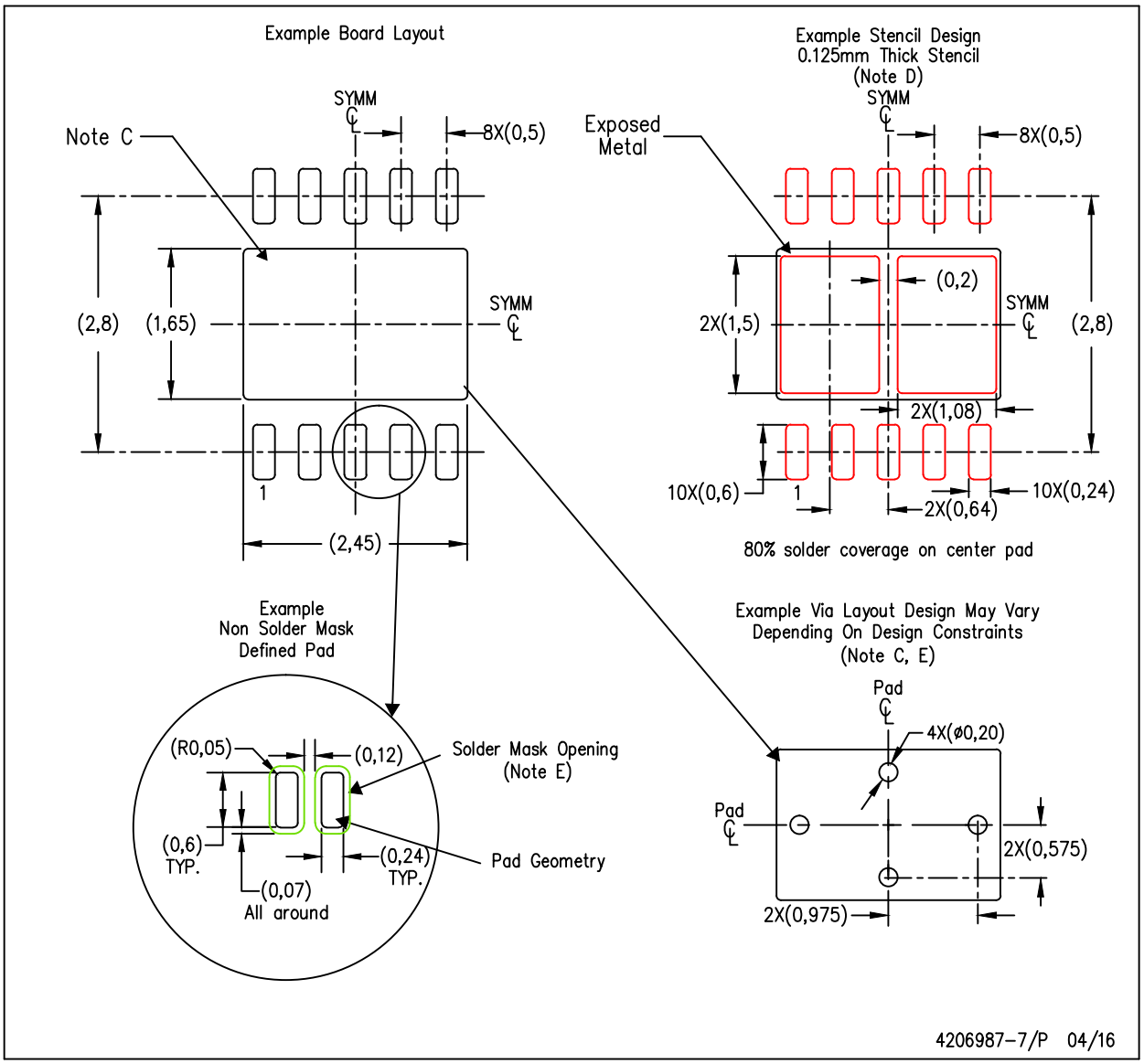

NOTES:
A. All linear dimensions are in millimeters.
B. This drawing is subject to change without notice.
C. This package is designed to be soldered to a thermal pad on the board. Refer to Application Note, Quad Flat-Pack Packages, Texas Instruments Literature No. SLUA271, and also the Product Data Sheets for specific thermal information, via requirements, and recommended board layout. These documents are available at www.ti.com <http://www.ti.com>.
D. Laser cutting apertures with trapezoidal walls and also rounding corners will offer better paste release. Customers should contact their board assembly site for stencil design recommendations. Refer to IPC 7525 for stencil design considerations.
E. Customers should contact their board fabrication site for minimum solder mask web tolerances between signal pads and via tenting recommendations for any larger diameter vias placed in the thermal pad.

IMPORTANT NOTICE

Texas Instruments Incorporated and its subsidiaries (TI) reserve the right to make corrections, enhancements, improvements and other changes to its semiconductor products and services per JESD46, latest issue, and to discontinue any product or service per JESD48, latest issue. Buyers should obtain the latest relevant information before placing orders and should verify that such information is current and complete. All semiconductor products (also referred to herein as “components”) are sold subject to TI’s terms and conditions of sale supplied at the time of order acknowledgment.

TI warrants performance of its components to the specifications applicable at the time of sale, in accordance with the warranty in TI’s terms and conditions of sale of semiconductor products. Testing and other quality control techniques are used to the extent TI deems necessary to support this warranty. Except where mandated by applicable law, testing of all parameters of each component is not necessarily performed.

TI assumes no liability for applications assistance or the design of Buyers’ products. Buyers are responsible for their products and applications using TI components. To minimize the risks associated with Buyers’ products and applications, Buyers should provide adequate design and operating safeguards.

TI does not warrant or represent that any license, either express or implied, is granted under any patent right, copyright, mask work right, or other intellectual property right relating to any combination, machine, or process in which TI components or services are used. Information published by TI regarding third-party products or services does not constitute a license to use such products or services or a warranty or endorsement thereof. Use of such information may require a license from a third party under the patents or other intellectual property of the third party, or a license from TI under the patents or other intellectual property of TI.

Reproduction of significant portions of TI information in TI data books or data sheets is permissible only if reproduction is without alteration and is accompanied by all associated warranties, conditions, limitations, and notices. TI is not responsible or liable for such altered documentation. Information of third parties may be subject to additional restrictions.

Resale of TI components or services with statements different from or beyond the parameters stated by TI for that component or service voids all express and any implied warranties for the associated TI component or service and is an unfair and deceptive business practice. TI is not responsible or liable for any such statements.

Buyer acknowledges and agrees that it is solely responsible for compliance with all legal, regulatory and safety-related requirements concerning its products, and any use of TI components in its applications, notwithstanding any applications-related information or support that may be provided by TI. Buyer represents and agrees that it has all the necessary expertise to create and implement safeguards which anticipate dangerous consequences of failures, monitor failures and their consequences, lessen the likelihood of failures that might cause harm and take appropriate remedial actions. Buyer will fully indemnify TI and its representatives against any damages arising out of the use of any TI components in safety-critical applications.

In some cases, TI components may be promoted specifically to facilitate safety-related applications. With such components, TI’s goal is to help enable customers to design and create their own end-product solutions that meet applicable functional safety standards and requirements. Nonetheless, such components are subject to these terms.

No TI components are authorized for use in FDA Class III (or similar life-critical medical equipment) unless authorized officers of the parties have executed a special agreement specifically governing such use.

Only those TI components which TI has specifically designated as military grade or “enhanced plastic” are designed and intended for use in military/aerospace applications or environments. Buyer acknowledges and agrees that any military or aerospace use of TI components which have ***not*** been so designated is solely at the Buyer's risk, and that Buyer is solely responsible for compliance with all legal and regulatory requirements in connection with such use.

TI has specifically designated certain components as meeting ISO/TS16949 requirements, mainly for automotive use. In any case of use of non-designated products, TI will not be responsible for any failure to meet ISO/TS16949.

Products		**Applications**	
Audio	www.ti.com/audio	Automotive and Transportation	www.ti.com/automotive
Amplifiers	amplifier.ti.com	Communications and Telecom	www.ti.com/communications
Data Converters	dataconverter.ti.com	Computers and Peripherals	www.ti.com/computers
DLP® Products	www.dlp.com	Consumer Electronics	www.ti.com/consumer-apps
DSP	dsp.ti.com	Energy and Lighting	www.ti.com/energy
Clocks and Timers	www.ti.com/clocks	Industrial	www.ti.com/industrial
Interface	interface.ti.com	Medical	www.ti.com/medical
Logic	logic.ti.com	Security	www.ti.com/security
Power Mgmt	power.ti.com	Space, Avionics and Defense	www.ti.com/space-avionics-defense
Microcontrollers	microcontroller.ti.com	Video and Imaging	www.ti.com/video
RFID	www.ti-rfid.com		
OMAP Applications Processors	www.ti.com/omap	**TI E2E Community**	e2e.ti.com
Wireless Connectivity	www.ti.com/wirelessconnectivity		

Mailing Address: Texas Instruments, Post Office Box 655303, Dallas, Texas 75265
Copyright © 2016, Texas Instruments Incorporated