Panasonic

PAN1326C2

Bluetooth Basic Data Rate and Low Energy Module

Product Specification

Rev. 1.4

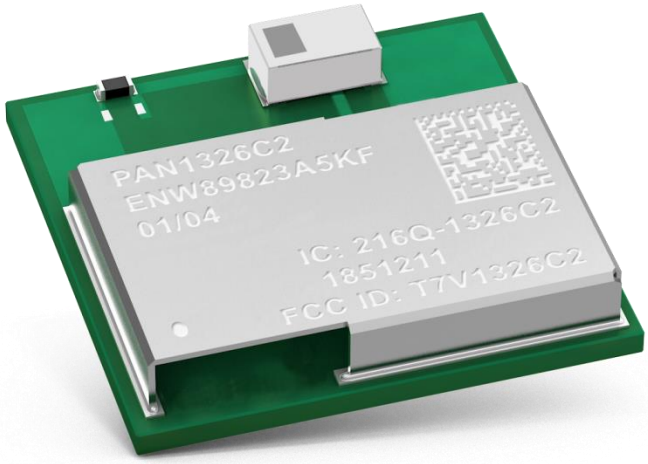

Wireless Modules

Overview

Panasonic's new PAN1326C2 is a Host Controlled Interface (HCI) Bluetooth® Radio Frequency (RF) module that brings Texas Instruments™ seventh generation Bluetooth core integrated circuit, the CC2564C, to an easy to use module format. The PAN1326C2 is Bluetooth 4.2 compliant and it offers best-in-class RF performance with about twice the range of other Bluetooth Low Energy (LE) solutions. Panasonic's tiny footprint technology has produced a module of only 85.5 mm². The module is designed to accommodate PCBs pad pitch of 1.3 mm and as few as two layers for easy implementation and manufacturing. The module has been designed to be 100 percent pin-compatible with previous generations of Texas Instruments based Bluetooth HCI modules.

Features

- Bluetooth 4.2 compliant up to the HCI layer
- Best-in-class Bluetooth RF performance (Tx, Rx sensitivity, blocking)
- Dimensions: 9 mm x 9.5 mm x 1.8 mm
- Based upon Texas Instruments CC2564C
- Interfaces: UART, GPIO, PCM

Characteristics

- Bluetooth 4.2
- Receiver sensitivity: -90 dBm
- Output power: 8 dBm
- Power supply: 1.7 V to 4.8 V
- Power consumption: Tx 40 mA
- Power consumption: Rx 20 mA
- Operating temperature range: -40 ºC to 85 ºC

Block Diagram

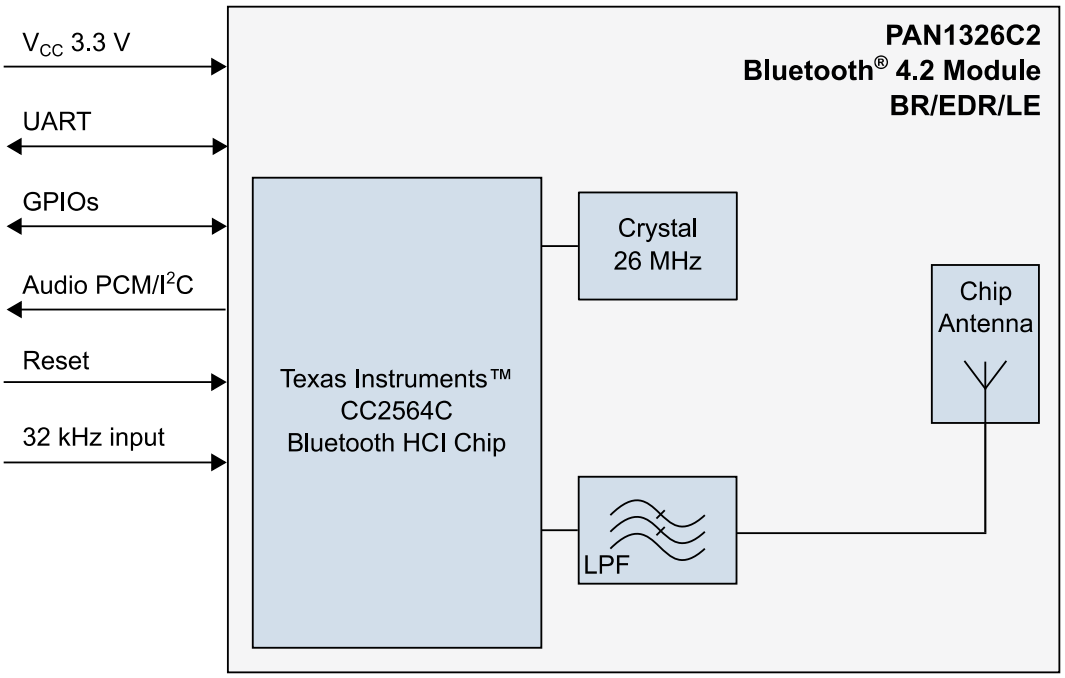

By purchase of any of the products described in this document the customer accepts the document's validity and declares their agreement and understanding of it is contents and recommendations. Panasonic reserves the right to make changes as required at any time without notification. Please consult the most recently issued Product Specification before initiating or completing a design.

© Panasonic Industrial Devices Europe GmbH 2019.

This Product Specification is copyrighted. Reproduction of this document is permissible only if reproduction is without alteration and is accompanied by all associated warranties, conditions, limitations, and notices. Do not disclose it to a third party.

All rights reserved.

This Product Specification does not lodge the claim to be complete and free of mistakes.

Engineering Samples (ES)

If Engineering Samples are delivered to the customer, these samples have the status “Engineering Samples”. This means that the design of this product is not yet concluded. Engineering Samples may be partially or fully functional, and they may differ from the published Product Specification.

Engineering Samples are not qualified and they are not to be used for reliability testing or series production.

Disclaimer

The customer acknowledges that samples may deviate from the Product Specification and may bear defects due to their status of development and the lack of qualification mentioned above.

Panasonic rejects any liability or product warranty for Engineering Samples. In particular, Panasonic disclaims liability for damages caused by:

- The use of the Engineering Sample other than for evaluation purposes, particularly the installation or integration in another product to be sold by the customer,
- Deviation or lapse in function of the Engineering Sample,
- Improper use of the Engineering Sample.

Panasonic Industrial Devices Europe GmbH disclaims any liability for consequential and incidental damages. In case of any queries regarding the Engineering Samples, please contact your local sales partner or the related product manager.

Table of Contents

1 About This Document 6
1.1 Purpose and Audience 6
1.2 Revision History 6
1.3 Use of Symbols 6
1.4 Related Documents 6

2 Overview 7
2.1 Block Diagram 8
2.2 Pin Configuration 9
2.3 Device Power Supply 12
2.4 Clock Inputs 14
2.5 Bluetooth Features 14
2.6 Interfaces 14

3 Detailed Description 20
3.1 Dimensions 20
3.2 Footprint 21
3.3 Packaging 22
3.4 Case Marking 25

4 Specification 26
4.1 Default Test Conditions 26
4.2 Absolute Maximum Ratings 26
4.3 Recommended Operating Conditions 27
4.4 Current Consumption 28
4.5 nSHUTD Requirements 28
4.6 External Digital Slow Clock Requirements 28
4.7 Bluetooth 29
4.8 Reliability Tests 35
4.9 Recommended Soldering Profile 36

5 Cautions 37
5.1 Design Notes 37
5.2 Installation Notes 37
5.3 Usage Condition Notes 38
5.4 Storage Notes 38
5.5 Safety Cautions 38
5.6 Other Cautions 39
5.7 Restricted Use 40

6 Regulatory and Certification Information 41
6.1 Federal Communications Commission (FCC) for US 41
6.2 Innovation, Science, and Economic Development (ISED) for Canada 44
6.3 European Conformity According to RED (2014/53/EU) 47
6.4 Bluetooth 48
6.5 RoHS and REACH Declaration 48

7 Appendix 49
7.1 Ordering Information 49
7.2 Contact Details 50

1 About This Document

1.1 Purpose and Audience

This Product Specification provides details on the functional, operational, and electrical characteristics of the Panasonic PAN1326C2 module. It is intended for hardware design, application and Original Equipment Manufacturer (OEM) engineers. The product is referred to as “the PAN1326C2” or “the module” within this document.

1.2 Revision History

Revision	Date	Modifications/Remarks
1.0	2019-01-20	1st version
1.1	2019-06-17	Corrections in temperature range and approved antenna list. Changed formatting. Added Bluetooth certification ID’s
1.2	2019-06-24	Added section in chapter “Regulatory and Certification Information“
1.3	2019-10-16	Corrected FCC identifier. Added information in chapter “6.4 Bluetooth”. Updated pictures “Block Diagram”, “Case Marking”, “Pin Assignment”, and “Footprint”. Updated formatting.
1.4	2019-10-25	Updated chapter “4.7 Bluetooth”: table “Bluetooth LE Modulation” and table “Bluetooth Receiver: In-Band Signals” (characteristics “Sensitivity, Dirty Tx on”). Updated chapter “European Conformity According to RED (2014/53/EU)”

1.3 Use of Symbols

Symbol	Description
ⓘ	**Note** Indicates important information for the proper use of the product. Non-observance can lead to errors.
⚠	**Attention** Indicates important notes that, if not observed, can put the product’s functionality at risk.
⇨ [chapter number] [chapter title]	**Cross reference** Indicates cross references within the document. **Example:** Description of the symbols used in this document ⇨ 1.3 Use of Symbols.

1.4 Related Documents

Please refer to the Panasonic website for related documents ⇨ 7.2.2 Product Information.

2 Overview

Panasonic's new PAN1326C2 is a Host Controlled Interface (HCI) Bluetooth RF module that brings Texas Instrument's seventh generation Bluetooth core integrated circuit, the CC2564, to an easy to use module format. The PAN1326C2 is Bluetooth 4.2 compliant and it offers best in class RF performance with about twice the range of other Bluetooth LE solutions. Panasonic's tiny footprint technology has produced a module of only 85.5 mm². The module is designed to accommodate PCBs pad pitch of 1.3 mm and as few as two layers for easy implementation and manufacturing. The module has been designed to be 100 percent pin-compatible with previous generations of Texas Instruments based Bluetooth HCI modules.

Please refer to the Panasonic website for related documents ⇨ 7.2.2 Product Information.

Further information on the variants and versions ⇨ 7.1 Ordering Information.

2.1 Block Diagram

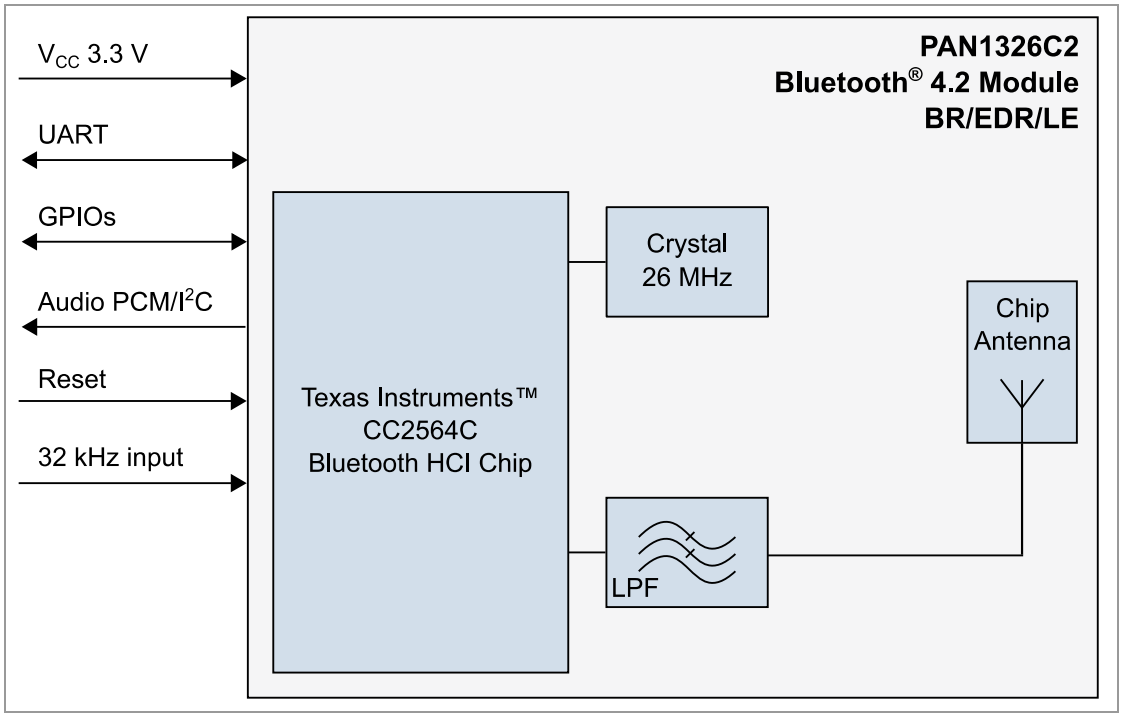

The Slow Clock 32.768 kHz is mandatory, otherwise the module does not start up ⇨ 2.4 Clock Inputs.

The I/O are 1.8 V driven and might need external level shifter and Low-dropout regulator (LDO). The Pin MLDO_OUT cannot be used as reference due to RF internal connection.

The total capacity will not exceed 2.8 µF. The total inductance will not exceed 0 nH. There are no voltage multiplying or voltage boosting circuits.

2.2 Pin Configuration

PIN Assignment

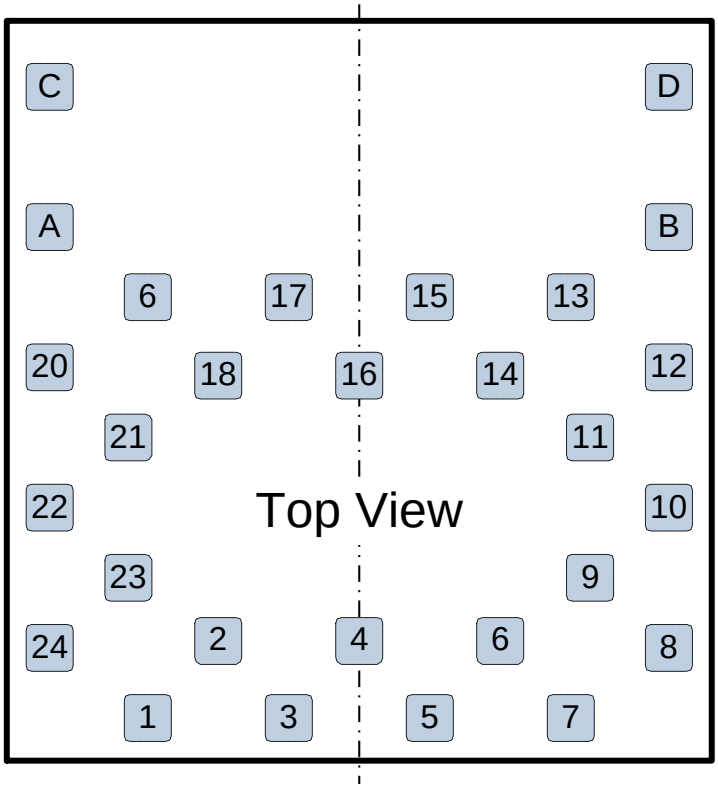

Pin Functions

No.	Pin Name	Pull at Reset	Def. Dir.[1]	I/O Type[2]	Description
1	GND				Connect to Ground
2	TX_DBG	PU	O	2 mA	Logger output
3	HCI_CTS	PU	I	8 mA	HCI UART clear-to-send
4	HCI_RTS	PU	O	8 mA	HCI UART request-to-send
5	HCI_RX	PU	I	8 mA	HCI UART data receive
6	HCI_TX	PU	O	8 mA	HCI UART data transmit
7	AUD_FSYNC	PD	I/O	4 mA	PCM frame synchronisation (NC if not used)
					Fail-safe[3]

[1] I=input, O=output, I/O=bidirectional, P=power, PU=pulled up, PD=pulled down

[2] I/O Type: Digital I/O cells, HY=input hysteresis, current=typ. output current

[3] No signals are allowed on the I/O pins if no V_{DD_IO} (Pin 22) power supplied, except pin 7, 8, 17 to 19.

No.	Pin Name	Pull at Reset	Def. Dir.[1]	I/O Type[2]	Description
8	SLOW_CLK_IN		I		32.768-kHz clock in
					Fail-safe
9	NC		I/O		Not connected
10	MLDO_OUT		O		Main LDO output (1.8 V nom.)
11	CL1.5_LDO_IN		I		PA LDO input
12	GND				Connect to Ground
13	RF		I/O		Bluetooth RF I/O
14	GND				Connect to Ground
15	MLDO_IN		I		Main LDO input
16	nSHUTD	PD	I		Shutdown input (active low)
17	AUD_OUT	PD	O	4 mA	PCM data output. (NC if not used)
					Fail-safe
18	AUD_IN	PD	I	4 mA	PCM data input. (NC if not used)
					Fail-safe
19	AUD_CLK	PD	I/O	HY, 4 mA	PCM clock. (NC if not used)
					Fail-safe
20	GND				Connect to Ground
21	NC				EEPROM I²C SDA (Internal)
22	V_{DD_IO}		PI		I/O power supply 1.8 V nom.
23	NC				EEPROM I²C SCL (Internal)
24	NC		I/O		Not connected
A	GND				Connect to Ground
B	GND				Connect to Ground
C	GND				Connect to Ground
D	GND				Connect to Ground

For RF conducted measurements de-solder the antenna and solder an antenna connector to the hot pin.

Pin Description

HCI_CTS is an input signal to the CC2564C device:

- When HCI_CTS is low: CC2564C is allowed to send data to Host device.
- When HCI_CTS is high: CC2564C is not allowed to send data to Host device.

No.	Pin Name	Pull at Reset	Def. Dir.[4]	I/O Type[5]	Description
5	HCI_RX	PU	I	8 mA	HCI UART data receive
6	HCI_TX	PU	O	8 mA	HCI UART data transmit
4	HCI_RTS	PU	O	8 mA	HCI UART request-to-send
3	HCI_CTS	PU	I	8 mA	HCI UART clear-to-send
7	AUD_FYSNC	PD	I/O	4 mA	PCM frame synchronisation (NC if not used)
					Fail-safe
19	AUD_CLK	PD	I/O	HY, 4 mS	PCM clock (NC if not used)
					Fail-safe
18	AUD_IN	PD	I	4 mA	PCM data input (NC if not used)
					Fail-safe
17	AUD_OUT	PD	O	4 mA	PCM data output (NC if not used)
					Fail-safe
2	TX_DBG	PU	O	2 mA	Logger output
					OPTION: nTX_DBG – logger out (low=1)
8	SLOW_CLK_IN		I		32.768 kHz clock in
					Fail-safe
13	RF		I/O		Bluetooth RF I/O (not connected with antenna)
16	nSHUTD	PD	I		Shutdown input (active low)
22	V_{DD_IO}		PI		I/O power supply 1.8 V nom.

[4] I=input, O=output, I/O=bidirectional, P=power, PU=pulled up, PD=pulled down

[5] I/O Type: Digital I/O cells, HY=input hysteresis, current=typ. output current

No.	Pin Name	Pull at Reset	Def. Dir.[4]	I/O Type[5]	Description
15	MLDO_IN		I		Main LDO input Connect directly to battery or to a pre-regulated 1.8 V supply
10	MLDO_OUT		O		Main LDO output 1.8 V nom Can not be used as 1.8 V supply due to internal connection to the RF part
11	CL1.5_LDO_IN		I		PA LDO input Connect directly to battery or to a pre-regulated 1.8 V supply
1	GND		P		Connect to Ground
12	GND		P		Connect to Ground
14	GND		P		Connect to Ground
20	GND		P		Connect to Ground
23	NC	PU/PD	I	HY, 4 mA	EEPROM I²C SCL (Internal)
21	NC	PU/PD	I/O	HY, 4 mA	EEPROM I²C IRQ (Internal)

2.3 Device Power Supply

The PAN1326C2 Bluetooth radio solution is intended to work in devices with a limited power budget such as cellular phones, headsets, handheld PC's, and other battery-operated devices. One of the main differentiators of the PAN1326C2 is its power management. It is ability to draw as little current as possible.

The PAN1326C2 device requires two kinds of power sources:

- Main power supply for the Bluetooth (V_{DD_IN}=V_{BAT})
- Power source for the 1.8 V I/O ring (V_{DD_IO})

The PAN1326C2 includes several on-chip voltage regulators for increased noise immunity. The PAN1326C2 can be connected either directly to the battery or to an external 1.8 V DC to DC converter.

Three ways to supply power

Full V_{BAT} system (Maximum RF output power, but not optimum system power):

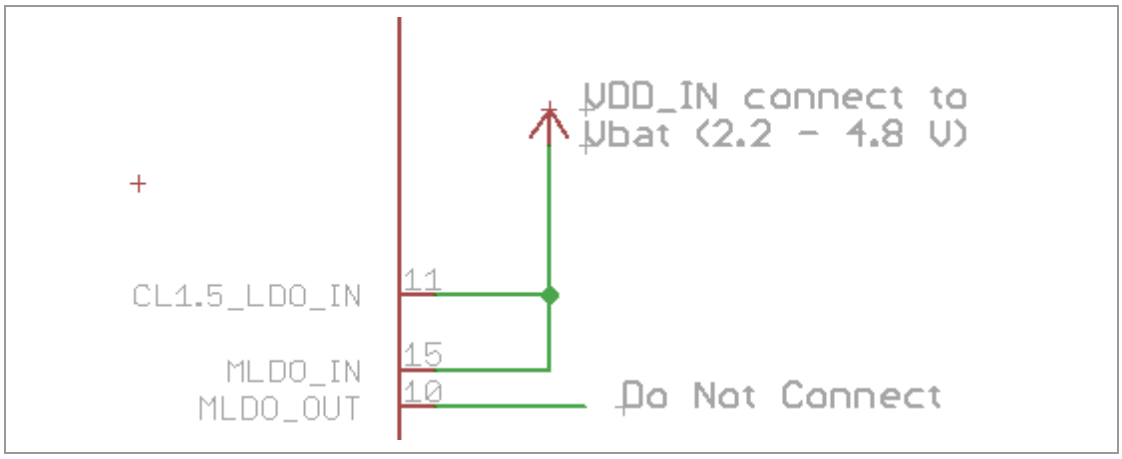

Full-DC2DC system (Lower RF output power, but optimum system power):

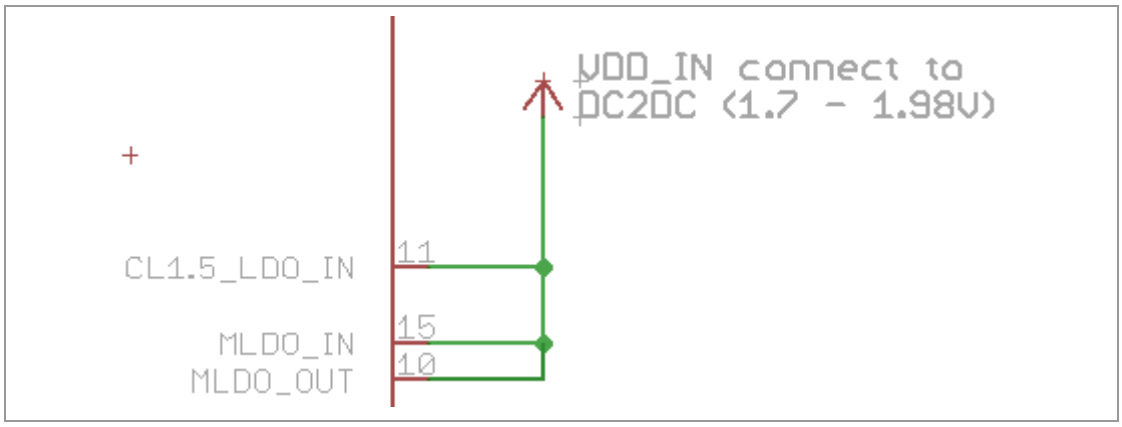

Mixed DC2DC-V_{BAT} system (Maximum RF output power and optimum system power, but requires routing of V_{BAT}):

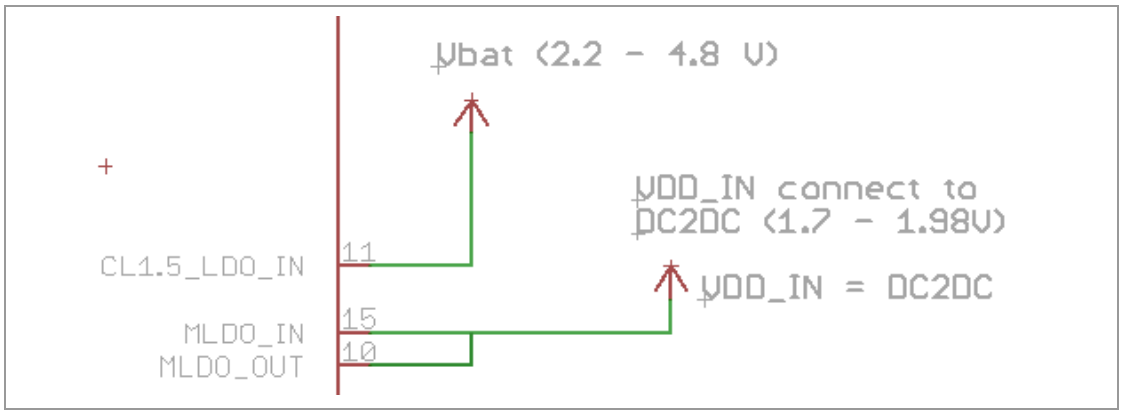

2.4 Clock Inputs

The Slow Clock is always supplied from an external source. It is connected to the SLOW_CLK_IN pin number 8 and can be a digital signal with peak to peak of 0 V to 1.8 V.

The Slow Clock's frequency accuracy must be 32.768 kHz 250 ppm for Bluetooth usage (according to the Bluetooth specification).

> The Slow Clock 32.768 kHz is mandatory to start the internal controller; otherwise the module does not start up.

2.5 Bluetooth Features

- Bluetooth 4.2 compliant up to the HCI layer
- Up to seven active devices
- Scatternet: up to three piconets simultaneously, one as master and two as slaves
- Up to two Synchronous Connection Oriented (SCO) links on the same piconet
- Support for all voice Air-Coding – Continuously Variable Slope Delta (CVSD), A-law, µ-law, modified Subband Coding (mSBC), and transparent (uncoded)
- Assisted mode for Handset Profile (HFP) 1.6 Wideband Speech (WBS) profile or Advanced Audio Distribution Profile (A2DP) profile to reduce host processing and power
- Support of multiple Bluetooth profiles with enhanced QoS
- Multiple sniff instances tightly coupled to achieve minimum power consumption
- Independent buffering for LE allows large numbers of multiple connections without affecting BR or EDR performance
- Built-in coexistence and prioritization handling for BR, EDR, and LE
- Capabilities of link layer topology Scatternet (can act concurrently as peripheral and central)
- Network support for up to ten devices
- Time line optimization algorithms to achieve maximum channel utilization

2.6 Interfaces

2.6.1 Host Controller Interface (HCI)

The CC2564C2 incorporates one UART module dedicated to the HCI transport layer. The HCI interface transports commands, events, ACL, and synchronous data between the Bluetooth device, and it is host using HCI data packets.

The UART module supports H4 (4-wires) protocol with maximum baud rate of 4 Mbps for all fast clock frequencies.

After power up the baud rate is set for 115.2 kbps, irrespective of fast clock frequency. The baud rate can thereafter be changed with a vendor specific command. The CC2564C responds with a Command Complete Event (still at 115.2 kbps), after which the baud rate change takes place. HCI hardware includes the following features:

- Receiver detection of break, idle, framing, FIFO overflow, and parity error conditions
- Transmitter underflow detection
- CTS/RTS hardware flow control

The interface includes four signals: TXD, RXD, CTS, and RTS. Flow control between the host and the CC2564C is byte-wise by hardware.

Flow control is obtained by the following:

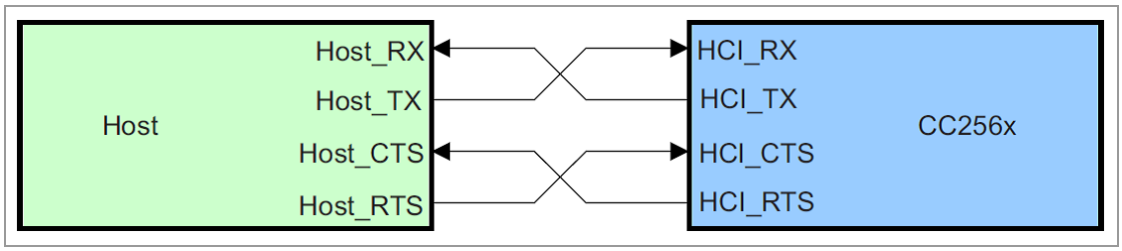

When the UART Rx buffer of the CC2564C passes the “flow control” threshold, it will set the signal UART_RTS high to stop transmission from the host.

When the signal UART_CTS is set high, the CC2564C will stop it is transmission on the interface. In case HCI_CTS is set high in the middle of transmitting a byte, the CC2564C will finish transmitting the byte and stop the transmission.

2.6.2 Audio/Voice CODEC Interface

The codec interface is a fully-dedicated programmable serial port that provides the logic to interface to several kinds of PCM or Inter-IC Sound (I^2S) codec’s. PAN1326C2 supports all voice coding schemes required by Bluetooth specification, Log PCM (A-Law or µ-Law) and Linear (CVSD). In addition, module also supports transparent scheme:

- Two voice channels
- Master/slave modes
- µ-Law, A-Law, linear, transparent coding schemes
- Long and short frames
- Different data sizes, order, and positions
- High rate PCM interface for EDR
- Enlarged interface options to support a wider variety of codecs
- PCM bus sharing

2.6.2.1 PCM Hardware Interface

The PCM interface is one implementation of the codec interface. It contains the following four lines:

- Clock: configurable direction (input or output)
- Frame synchronization: configurable direction (input or output)
- Data In: Input
- Data Out: Output/3-state

The Bluetooth device can be either the master of the interface where it generates the clock and the frame synchronization signals, or slave where it receives these two signals. The PCM interface is fully configured by a vendor specific command.

For slave mode, clock input frequencies of up to 16 MHz are supported. At clock rates above 12 MHz, the maximum data burst size is 32 bit. For master mode, the CC2564C can generate any clock frequency between 64 kHz and 6 MHz.

> When the I^2S bus is used in an application, it is recommended adding a low pass filter (series resistor and capacitor to GND) to the bus for better noise suppression. Connecting the host microcontroller/DSP directly with the module's I^2S interface is not recommended.

The suggested low pass filter component values are:

- 470 pF
- 120 Ω

2.6.2.2 Data Format

The data format is fully configurable:

- The data length can be from 8 bit to 320 bit, in 1 bit increments, when working with two channels, or up to 640 bit when using one channel. The Data length can be set independently for each channel.
- The data position within a frame is also configurable in with 1 clock (bit) resolution and can be set independently (relative to the edge of the frame synchronisation signal) for each channel.
- The bit order Data_In and Data_Out can be configured independently. For example: Data_In can start with the MSB while Data_Out starts with LSB. Each channel is separately configurable. The inverse bit order (that is LSB first) is supported only for sample sizes up to 24 bit.
- It is not necessary for the data in and data out size to be the same length.
- The Data_Out line is configured to "high-Z" output between data words. Data_Out can also be set for permanent high-Z, irrespective of data out. This allows the CC2564C to be a bus slave in a multi-slave PCM environment. At power up, Data_Out is configured as "high-Z".

2.6.2.3 Frame Idle Period

The codec interface has the capability for frame idle periods, where the PCM clock can “take a break” and become “0” at the end of the PCM frame, after all data has been transferred.

The CC2564C supports frame idle periods both as master and slave of the PCM bus.

When CC2564C is the master of the interface, the frame idle period is configurable. There are two configurable parameters:

Clk_Idle_Start:

Indicates the number of PCM clock cycles from the beginning of the frame until the beginning of the idle period. After Clk_Idle_Start clock cycles, the clock will become “0”.

Clk_Idle_End:

Indicates the time from the beginning of the frame till the end of the idle period. This time is given in multiples of PCM clock periods.

The delta between Clk_Idle_Start and Clk_Idle_End is the clock idle period.

For example, for PCM clock rate=1 MHz and frame synchronisation period=10 kHz: Clk_Idle_Start=60, Clk_Idle_End=90.

Between each two frame synchronisations there are 70 clock cycles (instead of 100). The clock idle period starts 60 clock cycles after the beginning of the frame, and lasts 90 to 60=30 clock cycles. This means that the idle period ends 100 to 90=10 clock cycles before the end of the frame. The data transmission must end prior to the beginning of the idle period.

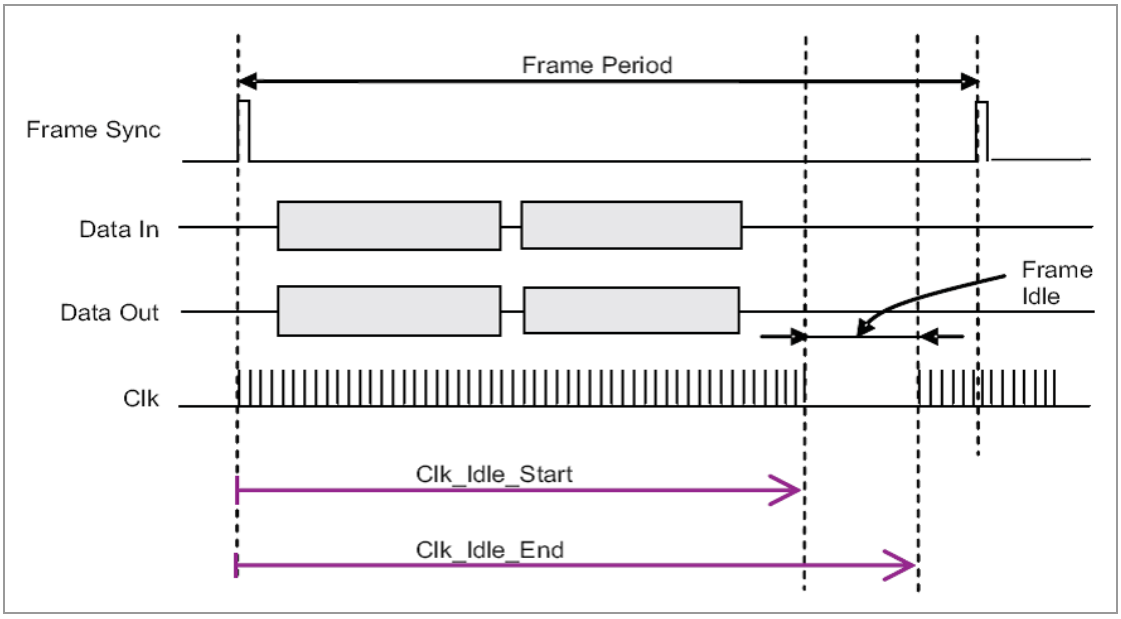

2.6.2.4 Clock-Edge Operation

The codec interface of the CC2564C can work on the rising or the falling edge of the clock. It also has the ability to sample the frame synchronisation and the data at inversed polarity.

This is the operation of a falling-edge-clock type of codec. The codec is the master of the PCM bus. The frame synchronisation signal is updated (by the codec) on the falling clock edge and therefore shall be sampled (by the CC2564C) on the next rising clock. The data from the codec is sampled (by the CC2564C) on the clock falling edge.

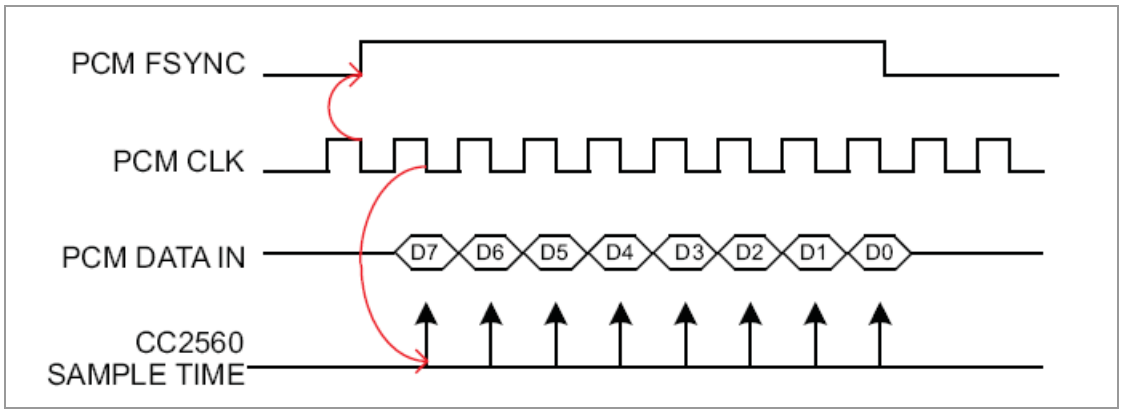

2.6.2.5 Two-Channel PCM Bus Example

In below figure, a two-channel PCM bus is shown where the two channels have different word sizes and arbitrary positions in the bus frame. (FT=Frame Timer)

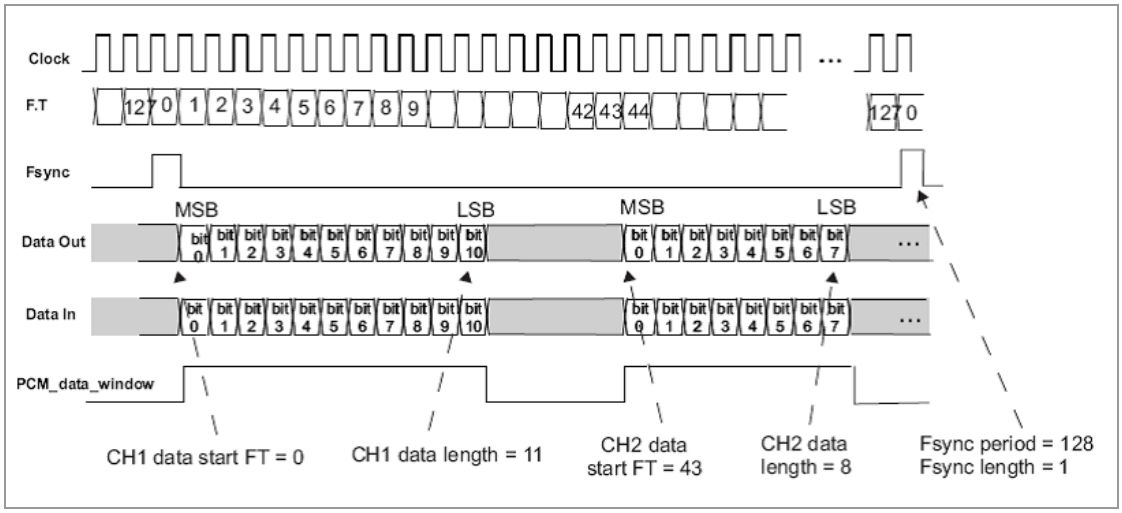

2.6.2.6 Audio Encoding

The CC2564C codec interface can use one of four audio-coding patterns:

- A-Law (8 bit)
- µ-Law (8 bit)
- Linear (8 bit or 16 bit)

2.6.2.7 Improved Algorithm for Lost Packets

The CC2564C features an improved algorithm for improving voice quality when received voice data packets are lost. There are two options:

- Repeat the last sample: possible only for sample sizes up to 24 bit. For sample sizes >24 bit, the last byte is repeated.
- Repeat a configurable sample of 8 bit to 24 bit (depends on the real sample size): in order to simulate silence (or anything else) in the PCM bus. The configured sample will be written in a specific register for each channel.

The choice between those two options is configurable separately for each channel.

2.6.2.8 Bluetooth/PCM Clock Mismatch Handling

In Bluetooth Rx, the CC2564C receives RF voice packets and writes these to the codec I/F. If the CC2564C receives data faster than the codec I/F output allows, an overflow will occur. In this case, the Bluetooth has two possible behavior modes:

- “allow overflow”: The Bluetooth will continue receiving data and will overwrite any data not yet sent to the codec.
- “don’t’ allow overflow”: RF voice packets received when buffer is full will be discarded.

2.6.2.9 Bluetooth Inter-IC Sound (I^2S)

The CC2564C can be configured as an I^2S serial interface to an I^2S codec device. In this mode, the CC2564C audio codec interface is configured as a bi-directional, full-duplex interface with two time slots per frame: Time slot 0 is used for the left channel audio data and time slot 1 for the right channel audio data. Each time slot is configurable up to 40 serial clock cycles in length and the frame is configurable up to 80 serial clock cycles in length.

> Do not connect the microcontroller/DSP directly to the module’s PCM interface.
>
> It is recommended to use a simple RC low pass filter to improve noise suppression.

3 Detailed Description

3.1 Dimensions

All dimensions are in millimeters.

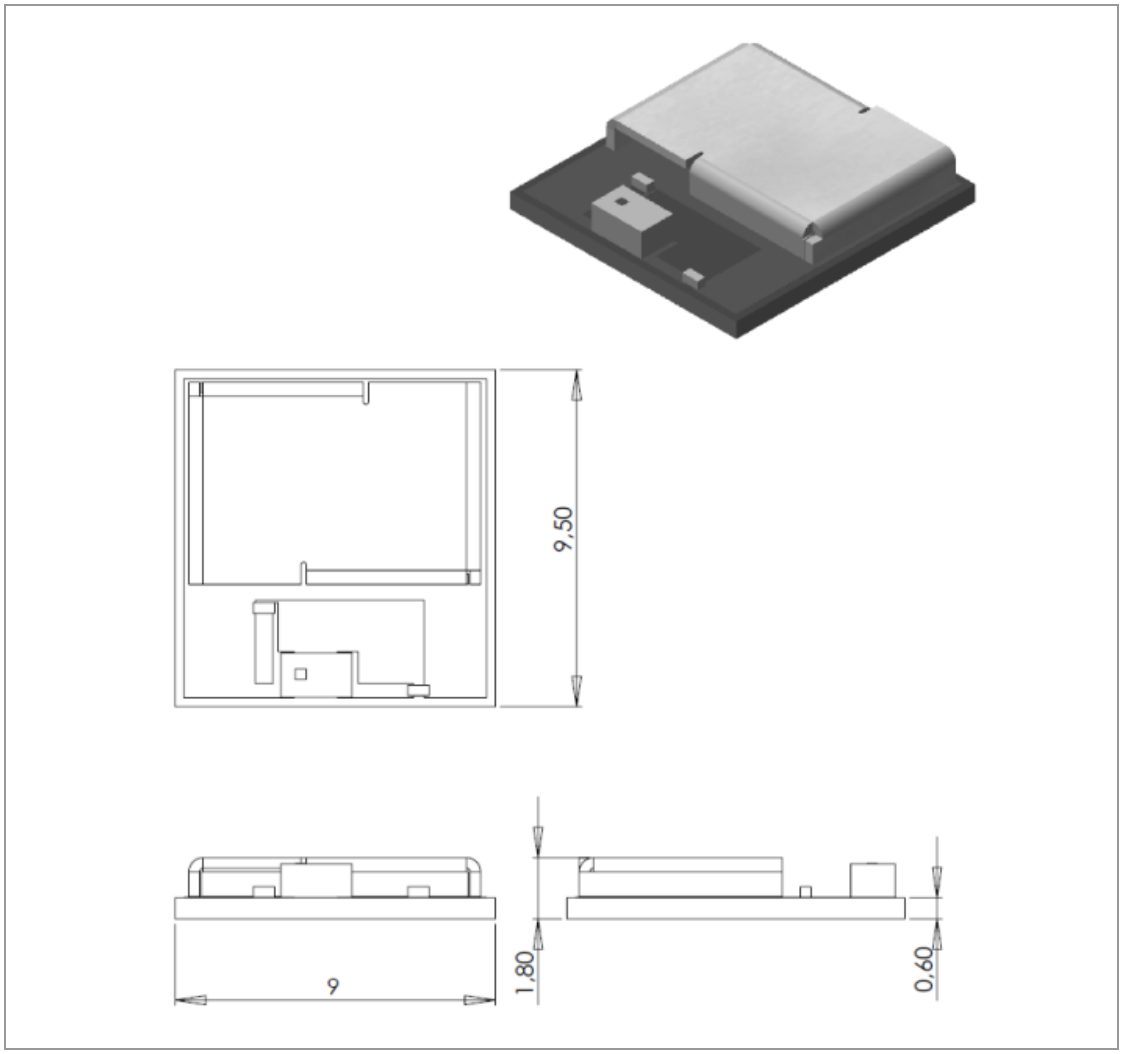

No.	Item	Dimension	Tolerance	Remark
1	Width	9.50	± 0.35	
2	Length	9.00	± 0.35	
3	Height	1.80	± 0.25	With case

3.2 Footprint

- All dimensions are in millimeters.
- The outer dimensions have a tolerance of ±0.35 mm.
- The layout is symmetric to center.
- The inner pins (2, 4, 6, 9, 11, 14, 16, 18, 21, 23) are shifted to the center by 1 mm.

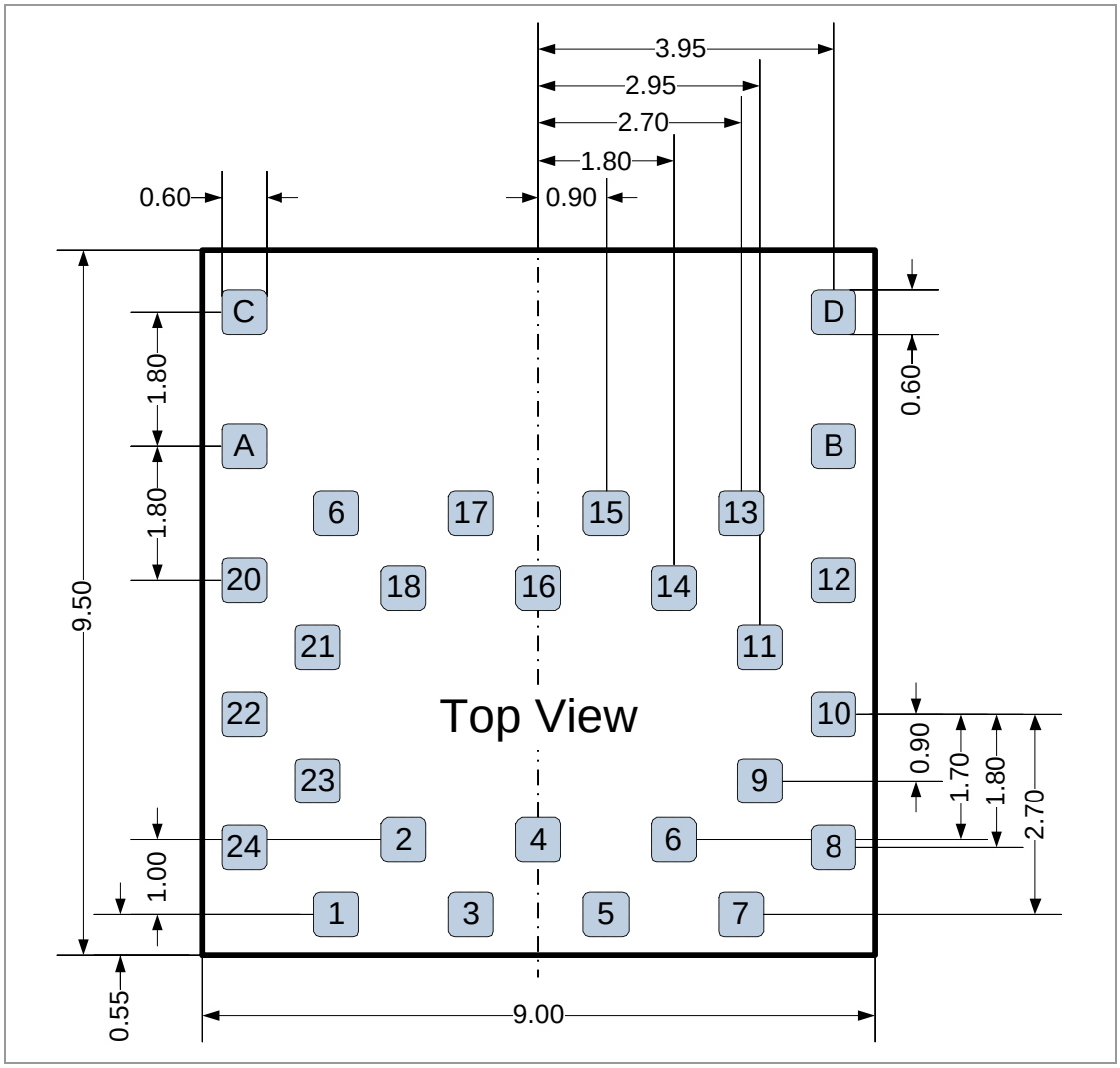

3.3 Packaging

The product is a mass production status product and will be delivered in the package described below.

3.3.1 Tape Dimensions

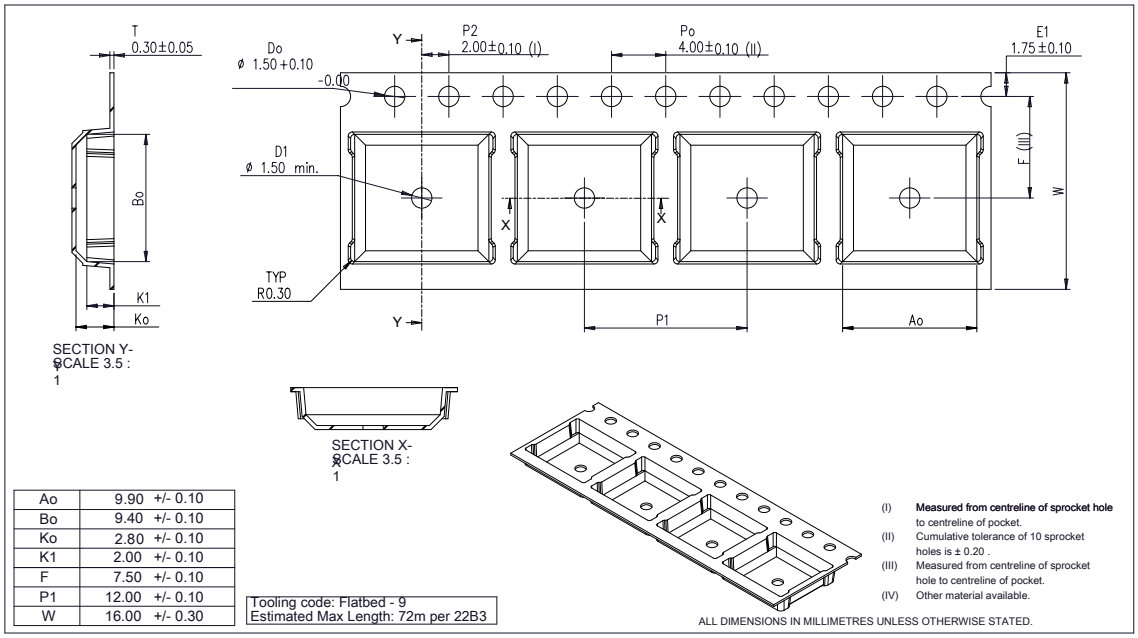

Ao	9.90 +/- 0.10
Bo	9.40 +/- 0.10
Ko	2.80 +/- 0.10
K1	2.00 +/- 0.10
F	7.50 +/- 0.10
P1	12.00 +/- 0.10
W	16.00 +/- 0.30

Tooling code: Flatbed - 9
Estimated Max Length: 72m per 22B3

3.3.2 Packing in Tape

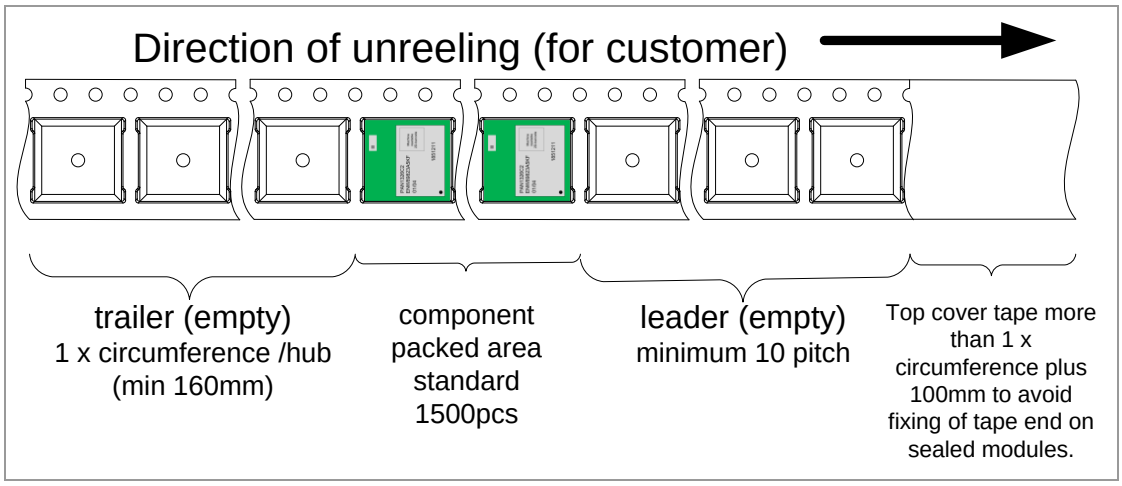

Empty spaces in the component packed area shall be less than two per reel and those spaces shall not be consecutive.

The top cover tape shall not be found on reel holes and it shall not stick out from the reel.

3.3.3 Component Direction

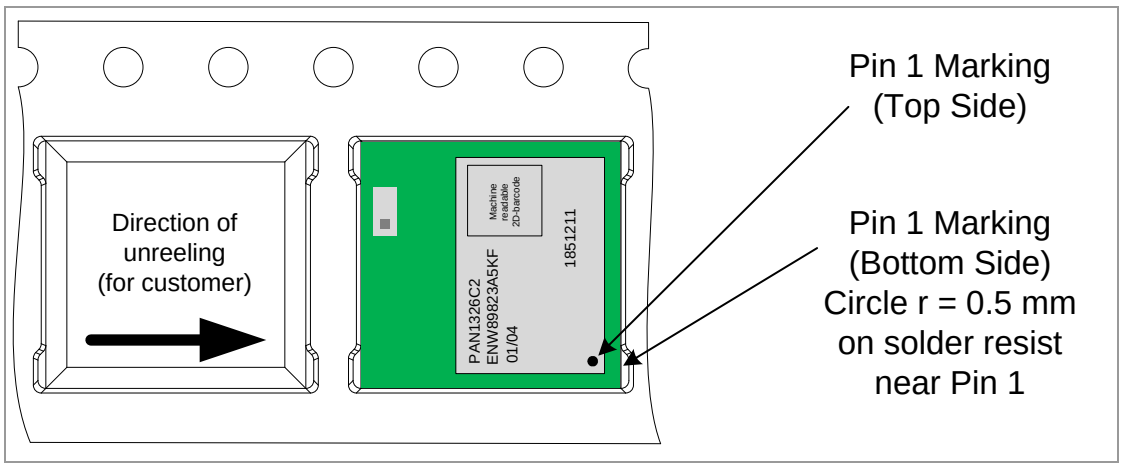

3.3.4 Reel Dimension

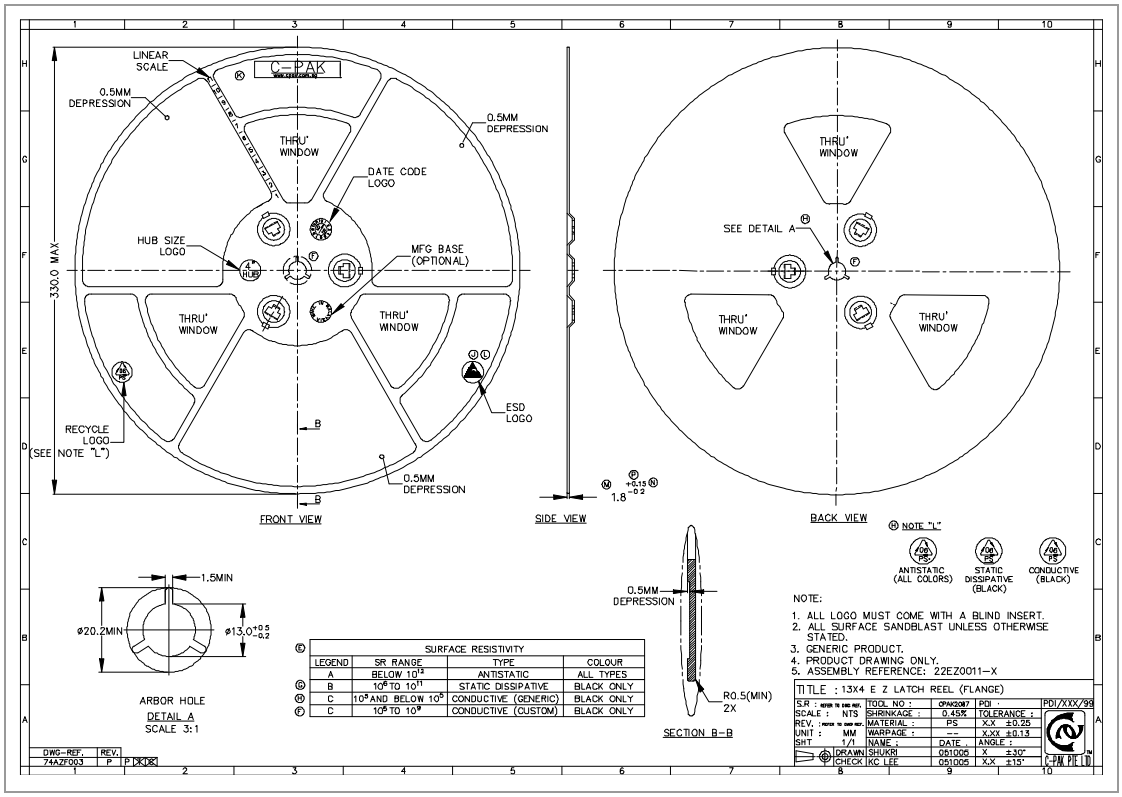

3.3.5 Package Label

Example

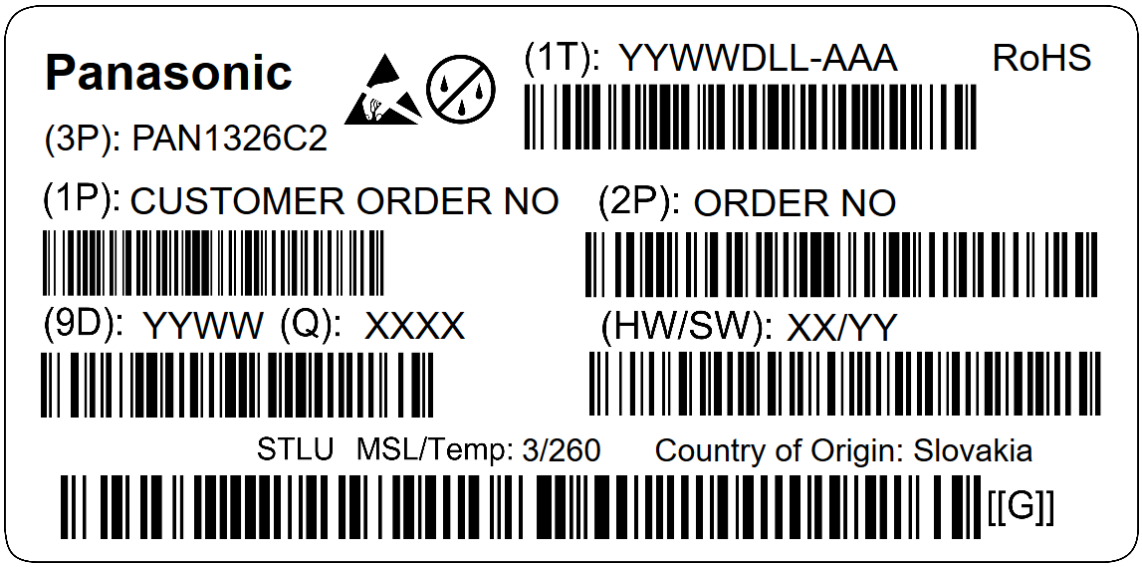

(1T)	Lot code
(1P)	Customer order number, if applicable
(2P)	Order number
(3P)	Brand name
(9D)	Date code
(Q)	Quantity
(HW/SW)	Hardware/software version

3.3.6 Total Package

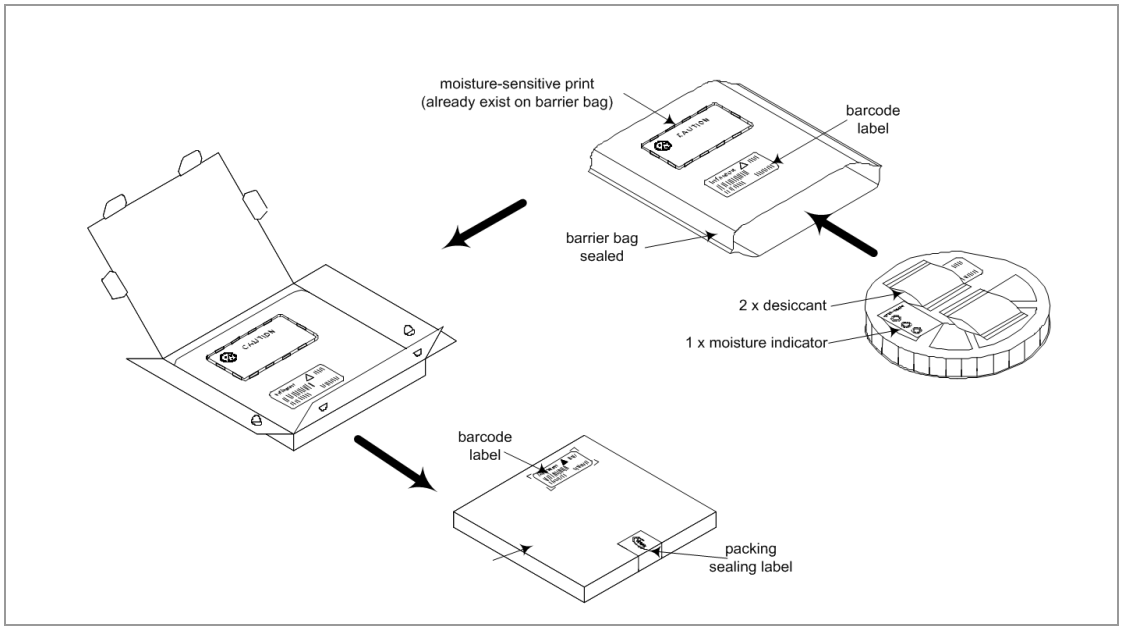

3.4 Case Marking

Example

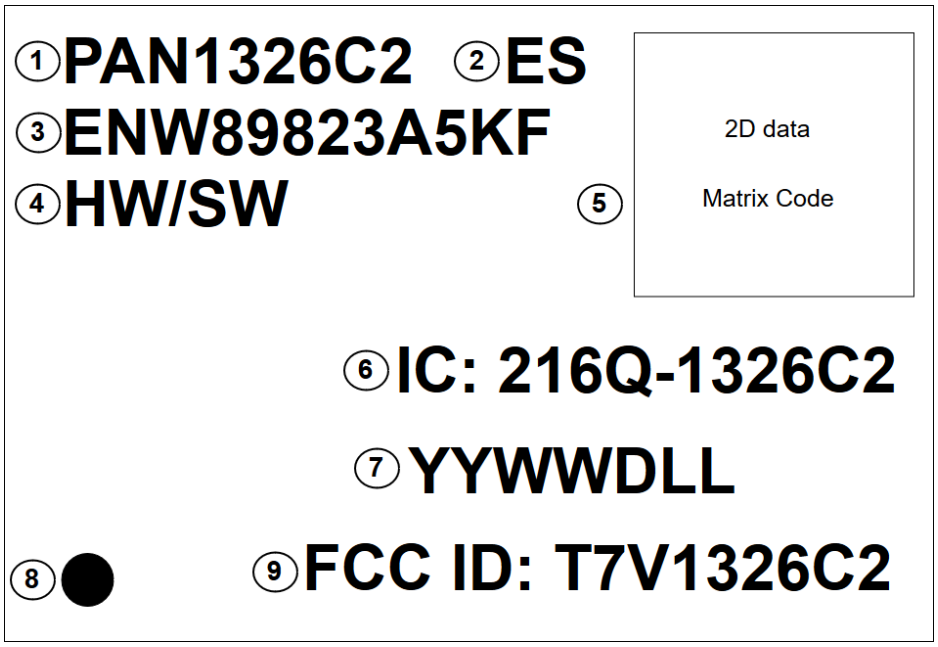

1	Brand name
2	Engineering Sample (optional)
3	Order number
4	Hardware/software version
5	2D Data Matrix Code
6	ISED marking
7	Lot code
8	Marking for Pin 1
9	FCC ID marking

4 Specification

All specifications are over temperature and process, unless indicated otherwise.

4.1 Default Test Conditions

Temperature:	25 °C ± 10 °C
Humidity:	40 to 85 % RH
Supply Voltage:	3.3 V

4.2 Absolute Maximum Ratings

The maximum ratings may not be exceeded under any circumstances, not even momentarily or individually, as permanent damage to the module may result.

All parameters are measured as follows unless stated otherwise: V_{DD_IN}[6]=3.3 V, V_{DD_IO}=1.8 V.

No.	See[7]	Min.	Max.	Unit
Ratings Over Operating Free-Air Temperature Range				
1	V_{DD_IN}	-0.5	5.5	V
2	$V_{DDIO_1.8\,V}$	-0.5	2.145	V
3	Input voltage to RF (Pin 13)	-0.5	2.1	V
4	Operating ambient temperature range	-40	85	°C
5	Storage temperature range	-40	125	°C
6	ESD: Human Body Model (HBM). JEDEC 22-A114		500	V

[6] V_{DD_IN} is supplied to MLDO_IN (Pin 15) and CL1.5_LDO_IN (Pin 11). Other options are described in ⇨ 2.3 Device Power Supply.

[7] Stresses beyond those listed under “absolute maximum ratings” may cause permanent damage to the device. These are stress ratings only and functional operation of the device at these or any other conditions beyond those indicated under “recommended operating conditions” is not implied. Exposure to absolute maximum rating conditions for extended periods may affect device reliability.

4.3 Recommended Operating Conditions

The maximum ratings may not be exceeded under any circumstances, not even momentarily or individually, as permanent damage to the module may result.

Symbol	Parameter	Condition	Min.	Max.	Unit
V_{DD_IN}	Power Supply Voltage[8]		1.7	4.8	V
V_{DD_IO}	I/O Power Supply Voltage		1.62	1.92	V
V_{IH}	High-Level Input Voltage	Default	0.65 x V_{DD_IO}	V_{DD_IO}	V
V_{IL}	Low-Level Input Voltage	Default	0	0.35 x V_{DD_IO}	V
Tr/Tf	I/O Input Rise/Fall Times, 10 % to 90 %[9]		1	10	ns
	Maximum Ripple on V_{DD_IN} (Sine wave) for 1.8 V (DC2DC) Mode	0 MHz to 0.1 MHz		60	mV_{p-p}
		0.1 MHz to 0.5 MHz		50	
		0.5 MHz to 2.5 MHz		30	
		2.5 MHz to 3 MHz		15	
		>3 MHz		5	
	Voltage Dips on V_{DD_IN} (V_{BAT}) (duration=577 µs to 2.31 ms, period=4.6 m)			400	mV
	Maximum Ambient Operating Temperature[10]		-40	85	°C

[8] Excluding 1.98 < V_{DD_IN} < 2.2 V range is not allowed ⇨ 2.3 Device Power Supply.

[9] Asynchronous mode.

[10] The device can be reliably operated for seven years at $T_{ambient}$ of 85 °C, assuming 25 percent active mode and 75 percent sleep mode (15 400 cumulative active power-on hours).

4.4 Current Consumption

No.	Characteristics	Min. 25 °C	Typ. 25 °C	Max. 25 °C	Min. -40 °C	Typ. -40 °C	Max. -40 °C	Min. +85 °C	Typ. +85 °C	Max. +85 °C	Unit
1	Current consumption in Shutdown Mode		1	3						7	µA
2	Current consumption in Deep Sleep Mode		40	105						700	µA
3	Total I/O current consumption for Active Mode			1			1			1	mA
4	Current consumption during transmit DH5 full throughput		40								mA

4.5 nSHUTD Requirements

Symbol	Parameter	Min.	Max.	Unit
V_{IH}	Operation Mode Level[11]	1.42	1.98	V
V_{IL}	Shutdown Mode Level	0	0.4	V
	Minimum Time for nSHUT_DOWN Low to Reset the Device	5		ms
Tr/Tf	Rise/Fall Times		20	µs

4.6 External Digital Slow Clock Requirements

Symbol	Parameter	Condition	Min.	Typ.	Max.	Unit
	Input Slow Clock Frequency			32 768		Hz
	Input Slow Clock Accuracy (Initial + temp + aging)	Bluetooth			±250	Ppm
Tr/Tf	Input Transition Time Tr/Tf – 10 % to 90 %				100	Ns
	Frequency Input Duty Cycle		15	50	85	%
	Phase Noise	At 1 kHz			-125	dBc/Hz
	Jitter	Integrated over 300 Hz to 15 000 Hz			1	Hz
V_{IH}	Slow Clock Input Voltage Limits	Square wave, DC coupled	0.65 x V_{DD_IO}		V_{DD_IO}	V peak
V_{IL}	Slow Clock Input Voltage Limits	Square wave, DC coupled	0		0.35 x V_{DD_IO}	V peak

[11] Internal pull down retains shut down mode when no external signal is applied to this pin.

Symbol	Parameter	Condition	Min.	Typ.	Max.	Unit
	Input Impedance		1			MΩ
	Input Capacitance				5	pF

4.7 Bluetooth

Bluetooth Receiver: In-Band Signals

Characteristics	Condition		Min.	Typ.	Max.	Unit
Operation frequency range			2 402		2 480	MHz
Channel spacing				1		MHz
Sensitivity, Dirty Tx on[12]	GFSK, BER=0.1 %			-90		dBm
	π/4-DQPSK, BER=0.01 %			-90		
	8DPSK, BER=0.01 %			-82		
BER error floor at sensitivity +10 dB, dirty Tx off	π/4-DQPSK		1E–6	1E–7		
	8DPSK		1E–6			
Maximum usable input power	GFSK, BER=0.1 %		-5			dBm
	π/4-DQPSK, BER=0.1 %		-10			
	8DPSK, BER=0.1 %		-10			
Intermodulation characteristics	Level of interferers (for n=3, 4, and 5)		-36	-30		dBm
C/I performance[13]	GFSK, cochannel					dB
Image=–1 MHz	EDR, cochannel	π/4-DQPSK		9.5	11	
		8DPSK		16.5	20	
	GFSK, adjacent ±1 MHz			-10	-5	
	EDR, adjacent ±1 MHz, (image)	π/4-DQPSK		-10	-5	
		8DPSK		-5	-1	
	GFSK, adjacent +2 MHz			-38	-35	
	EDR, adjacent, +2 MHz	π/4-DQPSK		-38	-35	
		8DPSK		-38	-30	
	GFSK, adjacent –2 MHz			-28	-20	
	EDR, adjacent –2 MHz	π/4-DQPSK		-28	-20	
		8DPSK		-22	-13	
	GFSK, adjacent ≥ |±3| MHz			-45	-43	
	EDR, adjacent ≥ |±3| MHz	π/4-DQPSK		-45	-43	
		8DPSK		-44	-36	
Rx mode LO leakage	Frf=(received RF – 0.6 MHz)			-63	-58	dBm

[12] Sensitivity degradation up to 3 dB may occur for minimum and typical values where the Bluetooth frequency is a harmonic of the fast clock.

[13] Numbers show ratio of desired signal to interfering signal. Smaller numbers indicate better C/I performance.

Bluetooth Receiver: General Blocking

Characteristics	Condition.	Typ.	Unit
Blocking performance over full range, according to Bluetooth specification[14]	30 to 2 000	-6	MHz
	2 000 to 2 399	-6	MHz
	2 484 to 3 000	-6	MHz
	3 to 12.75	-6	GHz

Bluetooth Transmitter: GFSK

Characteristics		Min.	Typ.	Max	Unit
Maximum RF output power[15]	$V_{DD_IN}=V_{BAT}$		8	10	dBm
	V_{DD_IN}=external regulator to 1.8 V		7	10	
Power variation over Bluetooth band		-1		1	dB
Gain control range			30		dB
Power control step			5		dB
Adjacent channel power |M–N|=2			-45		dBm
Adjacent channel power |M–N|>2			-50		dBm

Bluetooth Transmitter: EDR

Characteristics			Min.	Typ.	Max	Unit
EDR output power[16]	π/4-DQPSK	$V_{DD_IN}=V_{BAT}$		6	10	dBm
		V_{DD_IN}=external regulator to 1.8 V				
	8DPSK	$V_{DD_IN}=V_{BAT}$				
		V_{DD_IN}=external regulator to 1.8 V				
EDR relative power			-2		1	dB
Power variation over Bluetooth band			-1		1	dB
Gain control range				30		dB
Power control step				5		dB
Adjacent channel power |M–N|=1				-36		dBc
Adjacent channel power |M–N|=2				-30		dBm
Adjacent channel power |M–N|>2				-42		dBm

[14] Exceptions are taken out of the total 24 allowed in the Bluetooth specification.

[15] To modify maximum output power, use an HCI VS command.

[16] To modify maximum output power, use an NCI VS command.

Bluetooth Modulation: GFSK

Characteristics		Condition		Min.	Typ.	Max.	Unit
	–20 dB bandwidth	GFSK			925		kHz
F1 avg	Modulation characteristics	Δf1avg	Mod data=4 1 s, 4 0 s: 111100001111...		165		kHz
F2 max		Δf2max ≥ limit for at least 99.9 % of all Δf2max	Mod data=1010101...		130		kHz
		Δf2avg, Δf1avg			88		%
Absolute carrier frequency drift		DH1		-25		25	kHz
		DH3 and DH5		-35		35	
Drift rate						15	kHz/50 µs
Initial carrier frequency tolerance				-75		75	kHz

Bluetooth LE Transceiver, Out-Of-Band and Spurious Emissions

Characteristics	Condition	Typ.	Unit
Second harmonic	Measured at maximum output power (conducted)	-50	dBm
Third harmonic		-50	
Fourth harmonics		-50	

Bluetooth LE Receiver: In-Band Signals

Characteristics	Condition	Min.	Typ.	Max.	Unit
Operation frequency range		2 402		2 480	MHz
Channel spacing			2		MHz
Sensitivity, Dirty Tx on[17]	PER=30.8 %; dirty Tx on		-92		dBm
Maximum usable input power	GMSK, PER=30.8 %	-5			dBm
Intermodulation characteristics	Level of interferers (for n=3, 4, 5)		-30		dBm
C/I performance[18]	GMSK, cochannel		8		dB
Image=–1 MHz	GMSK, adjacent ±1 MHz		-5		
	GMSK, adjacent ±2 MHz		-45		
	GMSK, adjacent -2 MHz		-22		
	GMSK, adjacent ≥ |±3| MHz		-47		
Rx mode LO leakage	Frf=(received RF: 0.6 MHz)		-63		dBm

[17] Sensitivity degradation up to 3 dB may occur where the Bluetooth LE frequency is a harmonic of the fast clock.

[18] Numbers show wanted signal-to-interfering signal ratio. Smaller numbers indicate better C/I performance.

Bluetooth LE Receiver: General Blocking

Characteristics	Condition	Typ.	Unit
Blocking performance over full range, according to Bluetooth LE specification[19]	30 to 2 000 MHz	-15	dBm
	2 000 to 2 399 MHz	-15	
	2 484 to 3 000 MHz	-15	
	3 to 12.75 GHz	-15	

Bluetooth LE Transmitter

Characteristics		Typ.	Max.	Unit
RF output power	V_{DD_IN}=V_{BAT}	8	10	dBm
	V_{DD_IN}=External regulator to 1.8 V	6	10	
Power variation over Bluetooth LE band			1	dB
Adjacent channel power |M-N|=2		-45		dBm
Adjacent channel power |M-N|>2		-50		dBm

Bluetooth LE Modulation

Characteristics		Condition		Min.	Typ.	Max.	Unit
Δf1 avg	Modulation characteristics	Δf1avg	Mod data=4 1 s, 4 0 s: 1111000011110000...	240	250	260	kHz
Δf2 max		Δf2max ≥ limit for at least 99.9 % of all Δf2max	Mod data=1010101...	185	210		kHz
		Δf2avg, Δf1avg		0.85	0.9		
Absolute carrier frequency drift				-25		25	kHz
Drift rate						15	kHz/ 50 ms
Initial carrier frequency tolerance				-75		75	kHz

No.	Parameter	Min.	Typ.	Max.	Unit
1	Average Power Hopping DH5	4	8	10	dBm
2	Average Power: Ch0	4	8	10	dBm
3	Peak Power: Ch0		8	10	dBm
4	Average Power: Ch39	4	8	10	dBm
5	Peak Power: Ch39		8	10	dBm
6	Average Power: Ch78	4	8	10	dBm

[19] Exceptions are taken out of the total 10 allowed in the Bluetooth LE specification.

No.	Parameter	Min.	Typ.	Max.	Unit
7	Peak Power: Ch78		8	10	dBm
8	Max. Frequency Tolerance: Ch0	-75	-2.6	75	kHz
9	Max. Frequency Tolerance: Ch39	-75	-2.2	75	kHz
10	Max. Frequency Tolerance: Ch78	-75	-2.1	75	kHz
11	Max. Drift: Ch0_DH1	-25	3.6	25	kHz
12	Max. Drift: Ch0_DH3	-40	3.7	40	kHz
13	Max. Drift: Ch0_DH5	-40	4.0	40	kHz
14	Max. Drift Rate: Ch0_DH1	-20	-2.6	20	kHz
15	Max. Drift Rate: Ch0_DH3	-20	-3.2	20	kHz
16	Max. Drift Rate: Ch0_DH5	-20	-3.3	20	kHz
17	Max. Drift: Ch39_DH1	-25	4.0	25	kHz
18	Max. Drift: Ch39_DH3	-40	4.3	40	kHz
19	Max. Drift: Ch39_DH5	-40	4.3	40	kHz
20	Max. Drift Rate: Ch39_DH1	-20	-3.1	20	kHz
21	Max. Drift Rate: Ch39_DH3	-20	-3.6	20	kHz
22	Max. Drift Rate: Ch39_DH5	-20	-3.7	20	kHz
23	Max. Drift: Ch78_DH1	-25	4.1	25	kHz
24	Max. Drift: Ch78_DH3	-40	4.5	40	kHz
25	Max. Drift: Ch78_DH5	-40	4.4	40	kHz
26	Max. Drift Rate: Ch78_DH1	-20	-3.4	20	kHz
27	Max. Drift Rate: Ch78_DH3	-20	-3.9	20	kHz
28	Max. Drift Rate: Ch78_DH5	-20	-4.1	20	kHz
29	Delta F1 Avg: Ch0	140	159.5	175	kHz
30	Delta F2 Max.: Ch0	99.9	100.0		%
31	Delta F2 Avg/Delta F1 Avg: Ch0	0.8	0.9		
32	Delta F1 Avg: Ch39	140	159.8	175	kHz
33	Delta F2 Max.: Ch39	99.9	100.0		%
34	Delta F2 Avg/Delta F1 Avg: Ch39	0.8	0.9		
35	Delta F1 Avg: Ch78	140	159.1	175	kHz
36	Delta F2 Max.: Ch78	99.9	100.0		%
37	Delta F2 Avg/Delta F1 Avg: Ch78	0.8	0.9		
45	Sensitivity	-81	-92		
46	f(H)-f(L): Ch0		918.4	1 000	kHz
47	f(H)-f(L): Ch39		918.3	1 000	kHz
48	f(H)-f(L): Ch78		918.2	1 000	kHz
49	ACPower -3: Ch3		-51.5	-40	dBm

No.	Parameter	Min.	Typ.	Max.	Unit
50	ACPower -2: Ch3		-50.4	-40	dBm
51	ACPower -1: Ch3		-18.5		dBm
52	ACPower Center: Ch3	4	6,8	20	dBm
53	ACPower +1: Ch3		-19.2		dBm
54	ACPower +2: Ch3		-50.7	-40	dBm
55	ACPower +3: Ch3		-53.3	-40	dBm
56	ACPower -3: Ch39		-51.6	-40	dBm
57	ACPower -2: Ch39		-50.7	-40	dBm
58	ACPower -1: Ch39		-19.0		dBm
59	ACPower Center: Ch39	4	6,3	20	dBm
60	ACPower +1: Ch39		-19.7		dBm
61	ACPower +2: Ch39		-50.9	-40	dBm
62	ACPower +3: Ch39		-53.2	-40	dBm
63	ACPower -3: Ch75		-51.7	-40	dBm
64	ACPower -2: Ch75		-50.7	-40	dBm
65	ACPower -1: Ch75		-19.2		dBm
66	ACPower Center: Ch75	4	5,8	20	dBm
67	ACPower +1: Ch75		-20.0		dBm
68	ACPower +2: Ch75		-51.0	-40	dBm
69	ACPower +3: Ch75		-53.4	-40	dBm
70	omega i 2-DH5: Ch0	-75	-4.7	75	kHz
71	omega o + omega i 2-DH5: Ch0	-75	-6.0	75	kHz
72	omega o 2-DH5: Ch0	-10	-1.5	10	kHz
73	DEVM RMS 2-DH5: Ch0		0.0	0.2	%
74	DEVM Peak 2-DH5: Ch0		0.1	0.35	%
75	DEVM 99 % 2-DH5: Ch0	99	100.0		%
76	omega i 3-DH5: Ch0	-75	-3.7	75	kHz
77	omega o + omega i 3-DH5: Ch0	-75	-5.8	75	kHz
78	omega o 3-DH5: Ch0	-10	-2.6	10	kHz
79	DEVM RMS 3-DH5: Ch0		0.0	0.13	%
80	DEVM Peak 3-DH5: Ch0		0.1	0.25	%
81	DEVM 99 % 3-DH5: Ch0	99	100.0		%
82	omega i 2-DH5: Ch39	-75	-4.8	75	kHz
83	omega o + omega i 2-DH5: Ch39	-75	-6.1	75	kHz
84	omega o 2-DH5: Ch39	-10	-1.4	10	kHz
85	DEVM RMS 2-DH5: Ch39		0.0	0.2	%

No.	Parameter	Min.	Typ.	Max.	Unit
86	DEVM Peak 2-DH5: Ch39		0.1	0.35	%
87	DEVM 99 % 2-DH5: Ch39	99	100.0		%
88	omega i 3-DH5: Ch39	-75	-3.8	75	kHz
89	omega o + omega i 3-DH5: Ch39	-75	-5.9	75	kHz
90	omega o 3-DH5: Ch39	-10	-2.6	10	kHz
91	DEVM RMS 3-DH5: Ch39		0.0	0.13	%
92	DEVM Peak 3-DH5: Ch39		0.1	0.25	%
93	DEVM 99% 3-DH5: Ch39	99	100.0		%
94	omega i 2-DH5: Ch78	-75	-4.9	75	kHz
95	omega o + omega i 2-DH5: Ch78	-75	-6.2	75	kHz
96	omega o 2-DH5: Ch78	-10	-1.4	10	kHz
97	DEVM RMS 2-DH5: Ch78		0.0	0.2	%
98	DEVM Peak 2-DH5: Ch78		0.1	0.35	%
99	DEVM 99 % 2-DH5: Ch78	99	100.0		%
100	omega i 3-DH5: Ch78	-75	-3.8	75	kHz
101	omega o + omega i 3-DH5: Ch78	-75	-6.0	75	kHz
102	omega o 3-DH5: Ch78	-10	-2.7	10	kHz
103	DEVM RMS 3-DH5: Ch78		0.0	0.13	%
104	DEVM Peak 3-DH5: Ch78		0.1	0.25	%
105	DEVM 99 % 3-DH5: Ch78	99	100.0		%

4.8 Reliability Tests

The measurement should be done after the test device has been exposed to room temperature and humidity for one hour.

No.	Item	Limit	Condition
1	Vibration test	Electrical parameter should be in specification	• Freq.: 10 Hz~50 Hz; Amplitude: 1.5 mm; 20 min./cycle, 1 h. each of XYZ axis • Freq.: 30 Hz~100 Hz, 6 G; 20 min./cycle, 1 h. each of XYZ axis
2	Shock test	See above	Dropped onto hard wood from a height of 50 cm for 3 times
3	Heat cycle test	See above	-40 °C for 30 min. and +85 °C for 30 min.; each temperature 300 cycles
4	Moisture test	See above	+60 °C, 90 % RH, 300 h
5	Low temperature test	See above	-40 °C, 300 h
6	High temperature test	See above	+85 °C, 300 h

4.9 Recommended Soldering Profile

- Reflow permissible cycles: 2
- Opposite side reflow is prohibited due to module weight
- More than 75 percent of the soldering area shall be coated by solder
- The soldering profiles should be adhered to in order to prevent electrical or mechanical damage
- Soldering profile assumes lead-free soldering

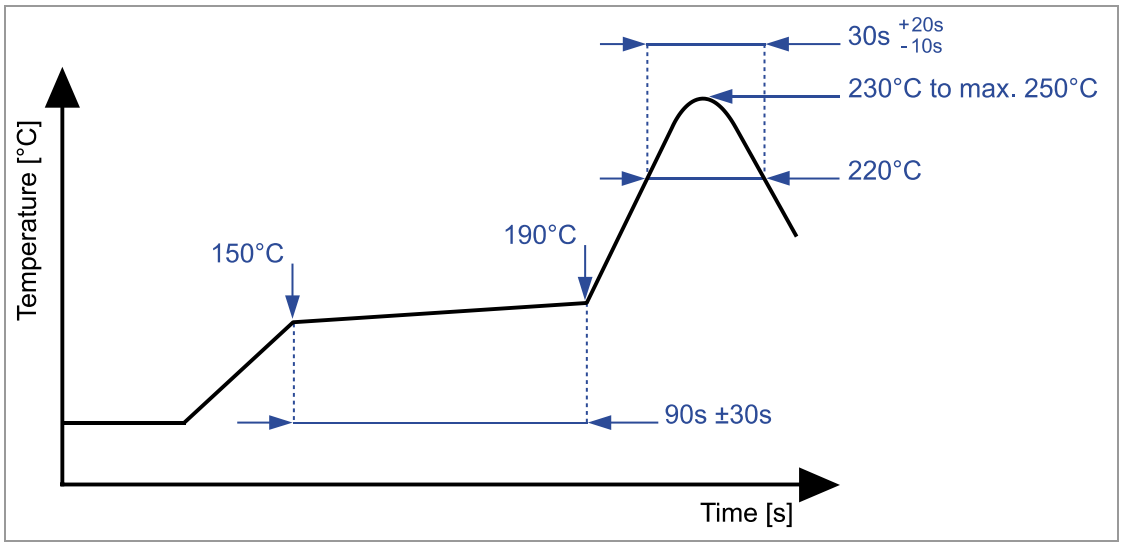

5 Cautions

Failure to follow the guidelines set forth in this document may result in degrading of the module functions and damage to the module.

5.1 Design Notes

1. Follow the conditions written in this specification, especially the control signals of this module.
2. The supply voltage should abide by the maximum ratings (⇨ 4.2 Absolute Maximum Ratings).
3. The supply voltage must be free of AC ripple voltage (for example from a battery or a low noise regulator output). For noisy supply voltages, provide a decoupling circuit (for example a ferrite in series connection and a bypass capacitor to ground of at least 47 µF directly at the module).
4. This module should not be mechanically stressed when installed.
5. Keep this module away from heat. Heat is the major cause of decreasing the life time of these modules.
6. Avoid assembly and use of the target equipment in conditions where the module temperature may exceed the maximum tolerance.
7. Keep this module away from other high frequency circuits.
8. Refer to the recommended pattern when designing a board.

5.2 Installation Notes

1. Reflow soldering is possible twice based on the conditions set forth in ⇨ 4.9 Recommended Soldering Profile. Set up the temperature at the soldering portion of this module according to this reflow profile.
2. Carefully position the module so that the heat will not burn into printed circuit boards or affect other components that are susceptible to heat.
3. Carefully locate the module, to avoid an increased temperature caused by heat generated by neighboring components.
4. If a vinyl-covered wire comes into contact with the module, the wire cover will melt and generate toxic gas, damaging the insulation. Never allow contact between a vinyl cover and these modules to occur.
5. This module should not be mechanically stressed or vibrated when reflowed.
6. To repair the board by hand soldering, follow the conditions set forth in this chapter.
7. Do not wash this product.
8. Pressing on parts of the metal cover or fastening objects to the metal will cause damage to the module.

5.3 Usage Condition Notes

1. Take measures to protect the module against static electricity.
   If pulses or transient loads (a large load, which is suddenly applied) are applied to the modules, check and evaluate their operation before assembly of the final products.
2. Do not use dropped modules.
3. Do not touch, damage, or soil the pins.
4. Follow the recommended condition ratings about the power supply applied to this module.
5. Electrode peeling strength: Do not apply a force of more than 4.9 N in any direction on the soldered module.
6. Pressing on parts of the metal cover or fastening objects to the metal cover will cause damage.
7. These modules are intended for general purpose and standard use in general electronic equipment, such as home appliances, office equipment, information, and communication equipment.

5.4 Storage Notes

1. The module should not be stressed mechanically during storage.
2. Do not store these modules in the following conditions or the performance characteristics of the module, such as RF performance will be adversely affected:

– Storage in salty air or in an environment with a high concentration of corrosive gas, such as Cl_2, H_2S, NH_3, SO_2, or NO_X,
– Storage in direct sunlight,
– Storage in an environment where the temperature may be outside the range of 5 °C to 35 °C, or where the humidity may be outside the 45 % to 85 % range,
– Storage of the modules for more than one year after the date of delivery storage period: Please check the adhesive strength of the embossed tape and soldering after 6 months of storage.

3. Keep this module away from water, poisonous gas, and corrosive gas.
4. This module should not be stressed or shocked when transported.
5. Follow the specification when stacking packed crates (max. 10).

5.5 Safety Cautions

These specifications are intended to preserve the quality assurance of products and individual components.

Before use, check and evaluate the operation when mounted on your products. Abide by these specifications without deviation when using the products. These products may short-circuit. If electrical shocks, smoke, fire, and/or accidents involving human life are anticipated when a short circuit occurs, provide the following failsafe functions as a minimum:

1. Ensure the safety of the whole system by installing a protection circuit and a protection device.
2. Ensure the safety of the whole system by installing a redundant circuit or another system to prevent a single fault causing an unsafe status.

5.6 Other Cautions

1. Do not use the module for other purposes than those listed in section ⇨ 5.3 Usage Condition Notes.
2. Be sure to provide an appropriate fail-safe function on your product to prevent any additional damage that may be caused by the abnormal function or the failure of the module.
3. This module has been manufactured without any ozone chemical controlled under the Montreal Protocol.
4. These modules are not intended for use under the special conditions shown below. Before using these modules under such special conditions, carefully check their performance and reliability under the said special conditions to determine whether or not they can be used in such a manner:

– In liquid, such as water, salt water, oil, alkali, or organic solvent, or in places where liquid may splash,
– In direct sunlight, outdoors, or in a dusty environment,
– In an environment where condensation occurs,
– In an environment with a high concentration of harmful gas (e.g. salty air, HCl, Cl_2, SO_2, H_2S, NH_3, and NO_X).

5. If an abnormal voltage is applied due to a problem occurring in other components or circuits, replace these modules with new modules, because they may not be able to provide normal performance even if their electronic characteristics and appearances appear satisfactory.

Please refer to the Panasonic website for for further information
⇨ 7.2.2 Product Information.

5.7 Restricted Use

5.7.1 Life Support Policy

This Panasonic Industrial Devices Europe GmbH product is not designed for use in life support appliances, devices, or systems where malfunction can reasonably be expected to result in a significant personal injury to the user, or as a critical component in any life support device or system whose failure to perform can be reasonably expected to cause the failure of the life support device or system, or to affect it is safety or effectiveness.

Panasonic customers using or selling these products for use in such applications do so at their own risk and agree to fully indemnify Panasonic Industrial Devices Europe GmbH for any damages resulting.

5.7.2 Restricted End Use

This Panasonic Industrial Devices Europe GmbH product is not designed for any restricted activity that supports the development, production, handling usage, maintenance, storage, inventory or proliferation of any weapons or military use.

Transfer, export, re-export, usage or reselling of this product to any destination, end user or any end use prohibited by the European Union, United States or any other applicable law is strictly prohibited.

6 Regulatory and Certification Information

6.1 Federal Communications Commission (FCC) for US

6.1.1 FCC Notice

The PAN1326C2, including the ceramic antenna and the antennas, which are listed in ⇨ 6.1.5 Approved Antenna List, complies with Part 15 of the FCC Rules.

The device meets the requirements for modular transmitter approval as detailed in FCC public Notice DA00-1407. The transmitter operation is subject to the following two conditions:

1. This device may not cause harmful interference, and
2. This device must accept any interference received, including interference that may cause undesired operation.

The FCC identifier for ENW89823A5KF is **FCC ID: T7V1326C2**.

6.1.2 Caution

The FCC requires the user to be notified that any changes or modifications made to this device that are not expressly approved by Panasonic Industrial Devices Europe GmbH may void the user's authority to operate the equipment.

This equipment has been tested and found to comply with the limits for a Class B digital device, pursuant to Part 15 of the FCC Rules.

These limits are designed to provide reasonable protection against harmful interference in a residential installation. This equipment generates uses and can radiate radio frequency energy and, if not installed and used in accordance with the instructions, may cause harmful interference to radio communications.

There is no guarantee that interference will not occur in a particular installation. If this equipment does cause harmful interference to radio or television reception, which can be determined by turning the equipment off and on.

It is recommended to try to correct the interference by one or more of the following measures:

- Reorient or relocate the receiving antenna.
- Increase the separation between the equipment and receiver.
- Connect the equipment into an outlet on a circuit different from that to which the receiver is connected.
- Consult the dealer or an experienced radio/TV technician for help.

6.1.3 Label Requirements

The OEM must ensure that FCC labelling requirements are met. This includes a clearly visible label (laser marking) on the outside of the OEM enclosure specifying the appropriate Panasonic FCC identifier for this product as well as the FCC Notice above.

The FCC identifier for model ENW89823A5KF is **FCC ID: T7V1326C2**.

This FCC identifier is valid for the PAN1326C2. The end product must in any case be labelled on the exterior with:

“Contains FCC ID: T7V1326C2”.

6.1.4 Antenna Warning

The device is tested with a standard SMA connector and with the antenna listed below. When integrated into the OEM’s product, these fixed antennas require installation preventing end users from replacing them with non-approved antennas. Any antenna not in the following table must be tested to comply with FCC Section 15.203 for unique antenna connectors and with Section 15.247 for emissions. The FCC identifier for the device with the antenna listed in ⇨ 6.1.5 Approved Antenna List is the same (**FCC ID: T7V1326C2**).

6.1.5 Approved Antenna List

Item	Part Number	Manufacturer	Frequency Band	Type	Gain (dBi)
1	ANT016008LCS2442MA1	TDK	2.4 GHz	Chip antenna	+1.6

We are able to qualify your antenna and will add it to this list when the certification process is completed.

6.1.6 RF Exposure

To comply with FCC RF Exposure requirements, the OEM must ensure that only antennas from the Approved Antenna List are installed ⇨ 6.1.5 Approved Antenna List.

The preceding statement must be included as a caution statement in manuals for products operating with the approved antennas in the previous table to alert users on FCC RF Exposure compliance.

Any notification to the end user of installation or removal instructions about the integrated radio module is not allowed.

The radiated output power of the PAN1326C2 with a mounted ceramic chip antenna (**FCC ID: T7V1326C2** for model ENW89823A5KF) are fulfilled for portable configuration. The PAN1326C2 shall be used in such a manner that the potential for human contact during normal operation is minimized.

End users may not be provided with the module installation instructions.
OEM integrators and end users must be provided with transmitter operating conditions for satisfying RF exposure compliance.

6.1.7 Integration Instructions for Host Product Manufacturers According to KDB 996369 D03 OEM Manual v01

Section	Topic and comment
2.2	**List of applicable FCC rules** FCC part 15.247 operation within the bands 902 MHz to 928 MHz, 2 400 MHz to 2 483.5 MHZ, and 5 725 MHz to 5 850 MHz
2.3	**Specific operational use conditions** Please refer to ⇨ 5 Cautions and especially part ⇨ 5.3 Usage Condition Notes.
2.4	**Limited module procedures** Not applicable. The module has a single-modular transmitter approval.
2.5	**Trace antenna designs** Not applicable. The module has a fixed ceramic chip antenna.
2.6	**RF exposure considerations** Portable (Distance to human body <20 cm). Device operates in body-worn configuration. Device operates next to person's ear. Please refer to Section ⇨ 6.1.6 RF Exposure
2.7	**Antennas** Please refer to Section ⇨ 6.1.4 Antenna Warning and ⇨ 6.1.5 Approved Antenna List for information about the antenna configuration.

Section	Topic and comment
2.8	**Label and compliance information** Please refer to Section ⇨ 6.1.3 Label Requirements for guidance regarding the required labeling.
2.9	**Information on test modes and additional testing requirements** Please study the Design Guide for the PAN1326C carefully. It offers guidance for PCB Layout and also relevant software. The Design Guide is available here ⇨ 7.2.2 Product Information.
2.10	**Additional testing, Part 15 Subpart B disclaimer** The PAN1326C2 is only FCC authorized for the specific rule FCC part 15.247. The host product manufacturer is responsible for compliance to any other FCC rules that apply to the host not covered by the modular transmitter grant of certification. The final host product still requires Part 15 Subpart B compliance testing with the PAN1326C2 installed.

6.2 Innovation, Science, and Economic Development (ISED) for Canada

English

PAN1326C2 and versions are licensed to meet the regulatory requirements of ISED.

License for M/N: ENW89823A5KF: **IC: 216Q-1326C2**

Manufacturers of mobile, fixed, or portable devices incorporating this module are advised to clarify any regulatory questions and ensure compliance for SAR and/or RF exposure limits. Users can obtain Canadian information on RF exposure and compliance from www.ic.gc.ca.

This device has been designed to operate with the antennas listed in ⇨ 6.1.5 Approved Antenna List, having a maximum gain of +1.6 dBi. Antennas not included in this list or having a gain greater than +1.6 dBi are strictly prohibited for use with this device. The required antenna impedance is 50 Ω. The antenna used for this transmitter must not be co-located or operating in conjunction with any other antenna or transmitter.

French

PAN1326C2 (et ses versions) est garanti conforme aux dispositions règlementaires d'Innovation, Sciences et Développement économique (ISDE).

Licence pour M/N: ENW89823A5KF: **IC: 216Q-1326C2**

Il est recommandé aux fabricants d'appareils fixes, mobiles ou portables de consulter la réglementation en vigueur et de vérifier la conformité de leurs produits relativement aux limites d'exposition aux rayonnements radiofréquence ainsi qu'au débit d'absorption spécifique maximum autorisé.

Des informations pour les utilisateurs sur la réglementation Canadienne concernant l'exposition aux rayonnements RF sont disponibles sur le site www.ic.gc.ca.

Ce produit a été développé pour fonctionner spécifiquement avec les antennes listées dans le tableau ⇨ 6.1.5 Approved Antenna List, présentant un gain maximum de 1.6 dBi. Des antennes autres que celles listées ici, ou présentant un gain supérieur à 1.6 dBi ne doivent en aucune circonstance être utilises en combinaison avec ce produit. L'impédance des antennes compatibles est 50 Ω. L'antenne utilisée avec ce produit ne doit ni être située à proximité d'une autre antenne ou d'un autre émetteur, ni être utilisée conjointement avec une autre antenne ou un autre émetteur.

6.2.1 IC Notice

English

The device PAN1326C2 and versions (⇨ 7.1 Ordering Information), including the antennas (⇨ 6.1.5 Approved Antenna List), comply with Canada RSS-Gen Rules. The device meets the requirements for modular transmitter approval as detailed in RSS-Gen.

Operation is subject to the following two conditions:

1. This device may not cause harmful interference, and
2. This device must accept any interference received, including interference that may cause undesired operation.

French

Le présent appareil PAN1326C2 (⇨ 7.1 Ordering Information), les antennes y compris (⇨ 6.1.5 Approved Antenna List), est conforme aux CNR-Gen d'ISDE applicables aux appareils radio exempts de licence.

L'exploitation est autorisée aux deux conditions suivantes :

1. L'appareil ne doit pas produire de brouillage, et
2. L'utilisateur de l'appareil doit accepter tout brouillage radioélectrique subi, même si le brouillage est susceptible d'en compromettre le fonctionnement.

6.2.2 Labeling Requirements

English

Labeling Requirements

The OEM must ensure that IC labelling requirements are met. This includes a clearly visible label on the outside of the OEM enclosure specifying the appropriate Panasonic IC identifier for this product as well as the IC Notice above.

The IC identifiers are:

IC: 216Q-1326C2 (for M/N: ENW89823A5KF)

These IC identifiers are valid for all PAN1326C2 modules ⇨ 7.1 Ordering Information. In any case, the end product must be labelled on the exterior with:

“Contains IC: 216Q-1326C2”.

French

Obligations d’étiquetage

Les fabricants d’équipements d’origine (FEO) – en anglais Original Equipment Manufacturer (OEM) – doivent s’assurer que les obligations d’étiquetage IC du produit final sont remplies. Ces obligations incluent une étiquette clairement visible à l’extérieur de l’emballage externe, comportant l’identifiant IC du module Panasonic inclus, ainsi que la notification ci-dessus.

L’ identifiant IC est:

IC: 216Q-1326C2 (pour M/N: ENW89823A5KF)

Cet identifiant est valide pour tous les modules PAN1326C2 ⇨ 7.1 Ordering Information. Dans tous les cas les produits finaux doivent indiquer sur leur emballage externe la mention suivante:

“Contient IC: 216Q-1326C2”.

6.3 European Conformity According to RED (2014/53/EU)

All modules described in this Product Specification comply with the standards according to the following LVD (2014/35/EU), EMC-D (2014/30/EU) together with RED (2014/53/EU) articles:

3.1a Safety/Health:	EN 62368-1:2014
	EN 62311:2008
3.1b EMC:	EN 301 489-1 V2.1.1:2017-02
	EN 301 489-17 V3.1.1:2017-02
3.2 Radio:	EN 300 328 V2.1.1:2016-11

As a result of the conformity assessment procedure described in 2014/53/EU Directive, the end customer equipment should be labelled as follows:

CE

The end customer has to assure that the device has a distance of more than 20 cm from the human body under all circumstances.

The end customer equipment must meet the actual Safety/Health requirements according to RED.

PAN1326C2 and its model versions in the specified reference design can be used in all countries of the European Economic Area (Member States of the EU, European Free Trade Association States [Iceland, Liechtenstein, Norway]), Monaco, San Marino, Andorra, and Turkey.

6.4 Bluetooth

The final Bluetooth end product listing needs to be created by using the following IDs:

Bluetooth 4.2	Declaration ID	QDID
Panasonic Module (PAN1326C2) Bluetooth 4.2 Controller Subsystem	D046132	126665
TI Bluetooth 4.2 Host Subsystem (If Texas Instruments Bluetooth software is used in the host controller)	D032797	85355

Bluetooth Marks

According to the Bluetooth SIG, the PAN1326C2 fulfills the criteria to label your product as a Bluetooth device:

For further information please refer to the Bluetooth website www.bluetooth.com.

6.5 RoHS and REACH Declaration

The latest declaration of environmental compatibility (Restriction of Hazardous Substances, RoHS and Registration, Evaluation, Authorisation and Restriction of Chemicals, REACH) for supplied products can be found on the Panasonic website in the “Downloads” section of the respective product ⇨ 7.2.2 Product Information.

7 Appendix

7.1 Ordering Information

Variants and Versions

Order Number	Brand Name	Description	MOQ[20]
ENW89823A5KF[21]	PAN1326C2	Bluetooth Basic Data Rate and Low Energy Module with Antenna	1 500

[20] Abbreviation for Minimum Order Quantity (MOQ). The default MOQ for mass production is 1 500 pieces, fewer only on customer demand. Samples for evaluation can be delivered at any quantity via the distribution channels.

[21] Samples are available on customer demand.

7.2 Contact Details

7.2.1 Contact Us

Please contact your local Panasonic Sales office for details on additional product options and services:

For Panasonic Sales assistance in the **EU**, visit

https://eu.industrial.panasonic.com/about-us/contact-us

Email: wireless@eu.panasonic.com

For Panasonic Sales assistance in **North America**, visit the Panasonic "Sales & Support" website to find assistance near you at

https://na.industrial.panasonic.com/distributors

Please visit the **Panasonic Wireless Technical Forum** to submit a question at

https://forum.na.industrial.panasonic.com

7.2.2 Product Information

Please refer to the Panasonic Wireless Connectivity website for further information on our products and related documents:

For complete Panasonic product details in the **EU**, visit

http://pideu.panasonic.de/products/wireless-modules.html

For complete Panasonic product details in **North America**, visit

http://www.panasonic.com/rfmodules