Globe Technology Component

GB-PT333 SERIES

Phototransistor
(5mm)

DESCRIPTION:

The PT333 series consists of a NPN silicon phototransistor encapsulated in blue transparent, dark blue or water clear plastic package.
The dark blue plastic package which cuts the visible light is suitable for the detection of infrared application.

PACKAGE DIMENSIONS

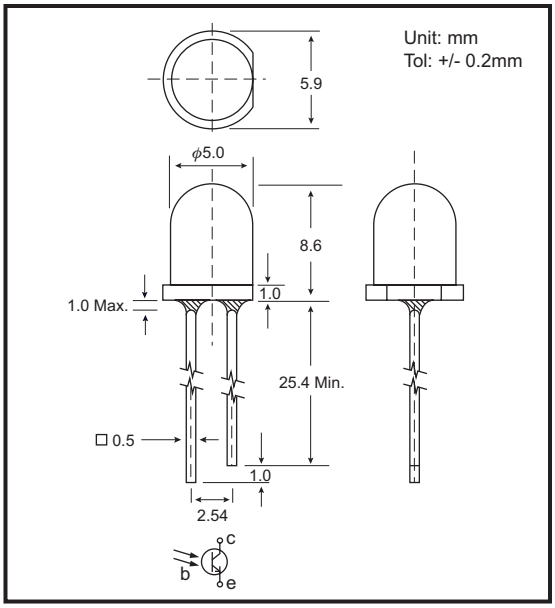

ABSOLUTE MAXIMUM RATINGS: (Ta=25°C)

Parameter	Max
Power Dissipation	100mW
Collector-Emitter Voltage	30V
Emitter-Collector Voltage	5V
Collector Current	20mA
Operating Temperature Range	-40°C To +85°C
Storage Temperature Range	-55°C To +100°C
Lead Soldering Temperature 1.6mm(.06") from body 260°C for 5 seconds	

NOTES : 1. All dimensions are in millimeters.
2. Lead spacing is measured where the leads emerge from the package.
3. Protuded resin under flange is 1.5 mm (0.059") Max.

ELECTRO-OPTICAL CHARACTERISTICS (Ta=25°C)

Part No.	Lens Color	Wave Length of Peak Sensitivity λp (nm)	Range of Spectral Bandwidth λ 0.5 (nm)	Collector-Emitter Saturation Voltage	Collector Dark Current ID (nA)	On State Collector Current IC (on)			Angular Response Δθ(Deg)
		Typ	Typ	Max	Max	Min	Typ	Max	Typ
GB-PT333A21C	Water Clear	980	400~1200	0.4	100	0.70	1.30	1.90	±20
GB-PT333A21BT	Blue Transparent								
GB-PT333A21DB	Dark Blue		840~1200			0.54	1.00	1.46	
GB-PT333A22C	Water Clear	980	400~1200	0.4	100	1.40	4.00	6.80	±20
GB-PT333A22BT	Blue Transparent								
GB-PT333A22DB	Dark Blue		840~1200			1.08	3.08	5.23	
GB-PT333B21C	Water Clear	860	400~1200	0.4	100	0.70	1.30	1.90	±20
GB-PT333B21BT	Blue Transparent								
GB-PT333B21DB	Dark Blue		840~1200			0.54	1.00	1.46	
GB-PT333B22C	Water Clear	860	400~1200	0.4	100	0.70	2.00	3.40	±20
GB-PT333B22BT	Blue Transparent								
GB-PT333B22DB	Dark Blue		840~1200			0.54	1.54	2.62	

TESTING CONDITION FOR EACH PARAMETER (Ta=25°C)

Parameter	Symbol	Unit	Test Condition
Collector-Emitter Breakdown Voltage	$V_{BR\ CEO}$	V	I_c=100μA Ee=0mW/cm²
Emitter-Collector Breakdown Voltage	$V_{BR\ ECO}$	V	I_E=100μA Ee=0mW/cm²
Collector-Emitter Saturation Voltage	$V_{CE\ (SAT)}$	V	I_C=0.1mA H=2.5mW/cm²
Collector Dark Current	I_D	nA	V_{CE}=10V Ee=0m/W/cm²
Rise Time	T_R	μs	V_{CC}=5V I_C=1mA RL=100Ω
Fall Time	T_F	μs	
On State Collector Current	$I_{C(ON)}$	mA	V_{CE}=5V Ee=1mW/cm² λ=940nm
Angular Response	Δθ	Deg	

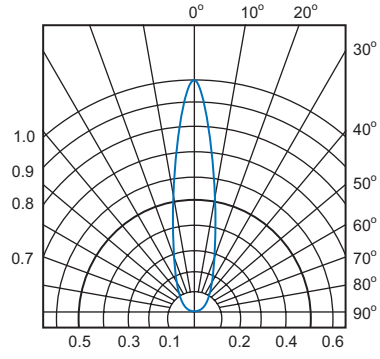

SPATIAL DISTRIBUTION