A New Direction in Mixed-Signal

XR8051, XR8052, XR8054

Low Cost, High Speed Rail-to-Rail Amplifiers

General Description

The XR8051 (single), XR8052 (dual) and XR8054 (quad) are low cost, voltage feedback amplifiers. These amplifiers are designed to operate on +3V to +5V, or ±5V supplies. The input voltage range extends 300mV below the negative rail and 0.9V below the positive rail.

The XR8051, XR8052, and XR8054 offer superior dynamic performance with a 260MHz small signal bandwidth and 190V/µs slew rate. The combination of low power, high output current drive, and rail-to-rail performance make these amplifiers well suited for battery-powered systems and video applications.

The combination of low cost and high performance make the XR8051, XR8052, and XR8054 suitable for high volume applications in both consumer and industrial applications such as video surveillance and distribution systems, professional and IPC cameras, active filter circuits, coaxial cable drivers, and electronic white boards.

FEATURES

- 260MHz bandwidth
- Fully specified at +3V, +5V and ±5V supplies
- Output voltage range:
  - 0.03V to 4.95V; V_S = +5; R_L = 2kΩ
- Input voltage range:
  - -0.3V to +4.1V; V_S = +5
- 190V/µs slew rate
- 2.6mA supply current per amplifier
- ±100mA linear output current
- ±125mA short circuit current
- XR8051 directly replaces AD8051, AD8091
- XR8052 directly replaces AD8052, AD8092
- XR8054 directly replaces AD8054

APPLICATIONS

- Video driver
- Video surveillance and distribution
- A/D driver
- Active filters
- CCD imaging systems
- CD/DVD ROM
- Coaxial cable drivers
- High capacitive load driver
- Portable/battery-powered applications
- Twisted pair driver
- Telecom and optical terminals

Ordering Information - page 26

Large Signal Frequency Response

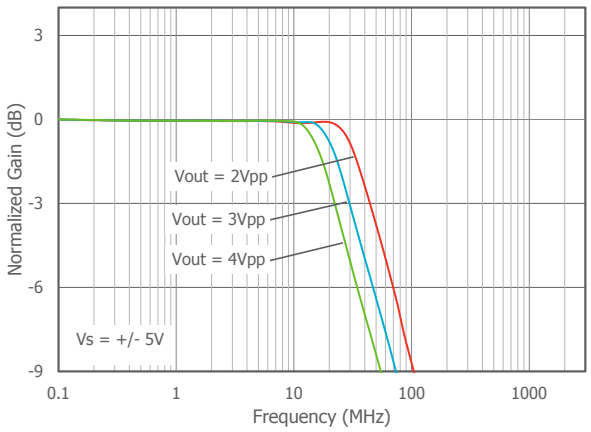

Output Voltage Swing vs Competition

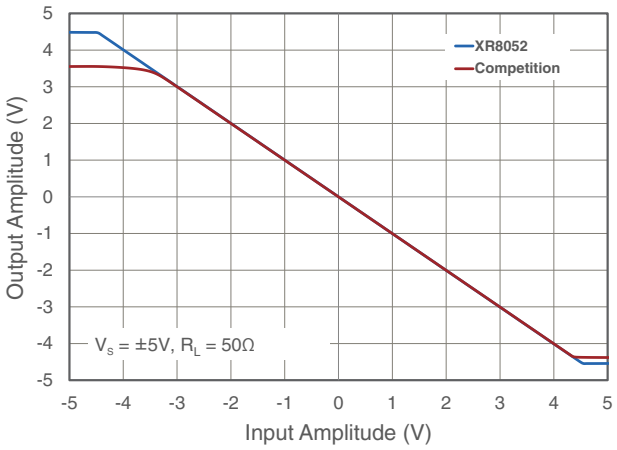

© 2007-2014 Exar Corporation

Absolute Maximum Ratings

Stresses beyond the limits listed below may cause permanent damage to the device. Exposure to any Absolute Maximum Rating condition for extended periods may affect device reliability and lifetime.

V_S ..... 0V to +14V

V_{IN} ..... $-V_S$ - 0.5V to $+V_S$ +0.5V

Operating Conditions

Supply Voltage Range .....2.7 to 12.6V

Operating Temperature Range .....-40°C to 125°C

Junction Temperature .....150°C

Storage Temperature Range.....-65°C to 170°C

Lead Temperature (Soldering, 10s) .....260°C

Package Thermal Resistance

θ_{JA} (TSOT-5).....215°C/W

θ_{JA} (SOIC-8).....150°C/W

θ_{JA} (MSOP-8) ..... 200°C/W

θ_{JA} (SOIC-14) ..... 90°C/W

θ_{JA} (TSSOP-14).....100°C/W

Package thermal resistance (θ_{JA}), JEDEC standard, multi-layer test boards, still air.

ESD Protection

XR8051, XR8052, XR8054 (HBM) 1kV

ESD Rating for HBM (Human Body Model).

© 2007-2014 Exar Corporation

Electrical Characteristics at +3V

T_A = 25°C, V_S = +3V, R_f = 1.5kΩ, R_L = 2kΩ to V_S/2; G = 2; unless otherwise noted.

Symbol	Parameter	Conditions	Min	Typ	Max	Units
Frequency Domain Response						
GBWP	-3dB Gain Bandwidth Product	G = +11, V_{OUT} = 0.2V_{pp}		90		MHz
UGBW	Unity Gain Bandwidth	V_{OUT} = 0.2V_{pp}, R_F = 0		245		MHz
BW_{SS}	-3dB Bandwidth	V_{OUT} = 0.2V_{pp}		85		MHz
$f_{0.1dB}$	0.1dB Gain Flatness	V_{OUT} = 0.2V_{pp}, R_L = 150Ω		16		MHz
BW_{LS}	Large Signal Bandwidth	V_{OUT} = 2V_{pp}		40		MHz
DG	Differential Gain	DC-coupled Output		0.03		%
		AC-coupled Output		0.04		%
DP	Differential Phase	DC-coupled Output		0.03		°
		AC-coupled Output		0.06		°
Time Domain						
t_R, t_F	Rise and Fall Time	V_{OUT} = 0.2V step; (10% to 90%)		5		ns
t_S	Settling Time to 0.1%	V_{OUT} = 1V step		25		ns
OS	Overshoot	V_{OUT} = 0.2V step		8		%
SR	Slew Rate	G = -1, 2V step		165		V/µs
Distortion/Noise Response						
THD	Total Harmonic Distortion	1MHz, V_{OUT} = 1V_{pp}		75		dBc
e_n	Input Voltage Noise	>50kHz		16		nV/√Hz
X_{TALK}	Crosstalk	f = 5MHz		58		dB
DC Performance						
V_{IO}	Input Offset Voltage			0.5		mV
d_{VIO}	Average Drift			5		µV/°C
I_B	Input Bias Current			1.4		µA
dI_B	Average Drift			2		nA/°C
I_{OS}	Input Offset Current			0.05		µA
PSRR	Power Supply Rejection Ratio	DC		102		dB
A_{OL}	Open Loop Gain	R_L = 2kΩ		92		dB
I_S	Supply Current	per channel		2.6		mA
Input Characteristics						
C_{IN}	Input Capacitance			0.5		pF
CMIR	Common Mode Input Range			-0.3 to 2.1		V
CMRR	Common Mode Rejection Ratio	DC, V_{CM} = 0 to 1.5V		100		dB
Output Characteristics						
V_{OUT}	Output Swing	R_L = 150Ω		0.3 to 2.75		V
		R_L = 2kΩ		0.02 to 2.96		V
I_{OUT}	Output Current			±100		mA
I_{SC}	Short Circuit Current	V_{OUT} = V_S / 2		±125		V
V_S	Power Supply Operating Range			2.7 to 12.6		V

© 2007-2014 Exar Corporation

Electrical Characteristics at +5V

T_A = 25°C, V_S = +5V, R_f = 1.5kΩ, R_L = 2kΩ to V_S/2; G = 2; unless otherwise noted.

Symbol	Parameter	Conditions	Min	Typ	Max	Units
Frequency Domain Response						
GBWP	-3dB Gain Bandwidth Product	G = +11, V_{OUT} = 0.2V_{pp}		95		MHz
UGBW	Unity Gain Bandwidth	V_{OUT} = 0.2V_{pp}, R_F = 0		250		MHz
BW_{SS}	-3dB Bandwidth	V_{OUT} = 0.2V_{pp}		85		MHz
$f_{0.1dB}$	0.1dB Gain Flatness	V_{OUT} = 0.2V_{pp}, R_L = 150Ω		35		MHz
BW_{LS}	Large Signal Bandwidth	V_{OUT} = 2V_{pp}		45		MHz
DG	Differential Gain	DC-coupled Output		0.03		%
		AC-coupled Output		0.04		%
DP	Differential Phase	DC-coupled Output		0.03		°
		AC-coupled Output		0.06		°
Time Domain						
t_R, t_F	Rise and Fall Time	V_{OUT} = 0.2V step		5		ns
t_S	Settling Time to 0.1%	V_{OUT} = 2V step		25		ns
OS	Overshoot	V_{OUT} = 0.2V step		5		%
SR	Slew Rate	G = -1, 4V step		185		V/µs
Distortion/Noise Response						
THD	Total Harmonic Distortion	1MHz, V_{OUT} = 2V_{pp}		-75		dBc
e_n	Input Voltage Noise	>50kHz		16		nV/√Hz
X_{TALK}	Crosstalk	f = 5MHz		58		dB
DC Performance						
V_{IO}	Input Offset Voltage		-7	0.5	7	mV
d_{VIO}	Average Drift			5		µV/°C
I_B	Input Bias Current		-2	1.4	2	µA
dI_B	Average Drift			2		nA/°C
I_{OS}	Input Offset Current		-0.75	0.05	0.75	µA
PSRR	Power Supply Rejection Ratio	DC	80	102		dB
A_{OL}	Open Loop Gain	R_L = 2kΩ	80	92		dB
I_S	Supply Current	per channel		2.6	4	mA
Input Characteristics						
C_{IN}	Input Capacitance			0.5		pF
CMIR	Common Mode Input Range			-0.3 to 4.1		V
CMRR	Common Mode Rejection Ratio	DC, V_{CM} = 0 to 3.5V	75	100		dB
Output Characteristics						
V_{OUT}	Output Swing	R_L = 150Ω	0.35	0.1 to 4.9	4.65	V
		R_L = 2kΩ		0.03 to 4.95		V
I_{OUT}	Output Current			±100		mA
I_{SC}	Short Circuit Current	V_{OUT} = V_S / 2		±125		V
V_S	Power Supply Operating Range			2.7 to 12.6		V

© 2007-2014 Exar Corporation

Electrical Characteristics at ±5V

T_A = 25°C, V_S = ±5V, R_f = 1.5kΩ, R_L = 2kΩ to GND; G = 2; unless otherwise noted.

Symbol	Parameter	Conditions	Min	Typ	Max	Units
Frequency Domain Response						
GBWP	-3dB Gain Bandwidth Product	G = +11, V_{OUT} = 0.2V_{pp}		90		MHz
UGBW	Unity Gain Bandwidth	V_{OUT} = 0.2V_{pp}, R_F = 0		260		MHz
BW_{SS}	-3dB Bandwidth	V_{OUT} = 0.2V_{pp}		85		MHz
$f_{0.1dB}$	0.1dB Gain Flatness	V_{OUT} = 0.2V_{pp}, R_L = 150Ω		22		MHz
BW_{LS}	Large Signal Bandwidth	V_{OUT} = 2V_{pp}		50		MHz
DG	Differential Gain	DC-coupled Output		0.03		%
		AC-coupled Output		0.04		%
DP	Differential Phase	DC-coupled Output		0.03		°
		AC-coupled Output		0.06		°
Time Domain						
t_R, t_F	Rise and Fall Time	V_{OUT} = 0.2V step		5		ns
t_S	Settling Time to 0.1%	V_{OUT} = 2V step, R_L = 100Ω		25		ns
OS	Overshoot	V_{OUT} = 0.2V step		5		%
SR	Slew Rate	G = -1, 5V step		190		V/µs
Distortion/Noise Response						
THD	Total Harmonic Distortion	1MHz, V_{OUT} = 2V_{pp}		76		dBc
e_n	Input Voltage Noise	>50kHz		16		nV/√Hz
X_{TALK}	Crosstalk	f = 5MHz		58		dB
DC Performance						
V_{IO}	Input Offset Voltage			0.5		mV
d_{VIO}	Average Drift			5		µV/°C
I_B	Input Bias Current			1.3		µA
dI_B	Average Drift			2		nA/°C
I_{OS}	Input Offset Current			0.04		µA
PSRR	Power Supply Rejection Ratio	DC		102		dB
A_{OL}	Open Loop Gain	R_L = 2kΩ		92		dB
I_S	Supply Current	per channel		2.6		mA
Input Characteristics						
C_{IN}	Input Capacitance			0.5		pF
CMIR	Common Mode Input Range			-5.3 to 4.1		V
CMRR	Common Mode Rejection Ratio	DC, V_{CM} = -5 to 3.5V		100		dB
Output Characteristics						
V_{OUT}	Output Swing	R_L = 150Ω		-4.8 to 4.8		V
		R_L = 2kΩ		-4.95 to 4.93		V
I_{OUT}	Output Current			±100		mA
I_{SC}	Short Circuit Current	V_{OUT} = V_S / 2		±125		V
V_S	Power Supply Operating Range			2.7 to 12.6		V

© 2007-2014 Exar Corporation

XR8051 Pin Configurations

TSOT-5

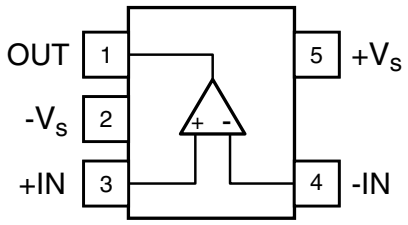

SOIC-8

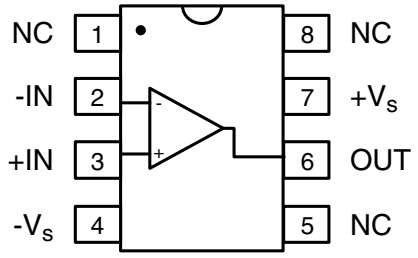

XR8051 Pin Assignments

TSOT-5

Pin No.	Pin Name	Description
1	OUT	Output
2	$-V_S$	Negative supply
3	+IN	Positive input
4	-IN	Negative input
5	$+V_S$	Positive supply

SOIC-8

Pin No.	Pin Name	Description
1	NC	No Connect
2	-IN	Negative input
3	+IN	Positive input
4	$-V_S$	Negative supply
5	NC	No Connect
6	OUT	Output
7	$+V_S$	Positive supply
8	NC	No Connect

XR8052 Pin Configuration

SOIC-8 / MSOP-8

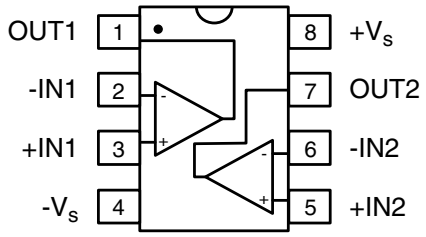

XR8052 Pin Assignments

SOIC-8 / MSOP-8

Pin No.	Pin Name	Description
1	OUT1	Output, channel 1
2	-IN1	Negative input, channel 1
3	+IN1	Positive input, channel 1
4	$-V_S$	Negative supply
5	+IN2	Positive input, channel 2
6	-IN2	Negative input, channel 2
7	OUT2	Output, channel 2
8	$+V_S$	Positive supply

© 2007-2014 Exar Corporation

XR8054 Pin Configuration

SOIC-14 / TSSOP-14

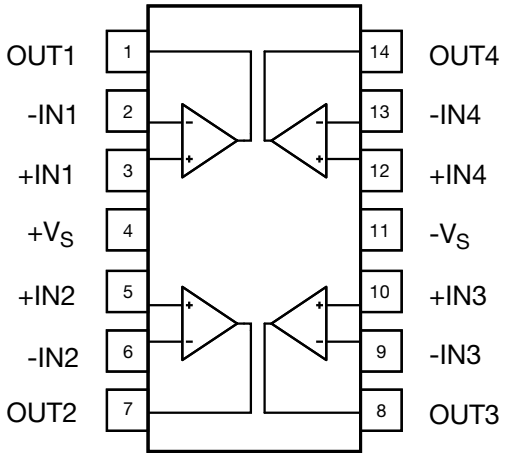

XR8054 Pin Assignments

SOIC-14 / TSSOP-14

Pin No.	Pin Name	Description
1	OUT1	Output, channel 1
2	-IN1	Negative input, channel 1
3	+IN1	Positive input, channel 1
4	$+V_S$	Positive supply
5	+IN2	Positive input, channel 2
6	-IN2	Negative input, channel 2
7	OUT2	Output, channel 2
8	OUT3	Output, channel 3
9	-IN3	Negative input, channel 3
10	+IN3	Positive input, channel 3
11	$-V_S$	Negative supply
12	+IN4	Positive input, channel 4
13	-IN4	Negative input, channel 4
14	OUT4	Output, channel 4

© 2007-2014 Exar Corporation

Typical Performance Characteristics

T_A = 25°C, V_S = +3V, R_L = 2kΩ to V_S/2, G = +2, R_F = 1.5kΩ; unless otherwise noted.

Non-Inverting Freq. Resp.

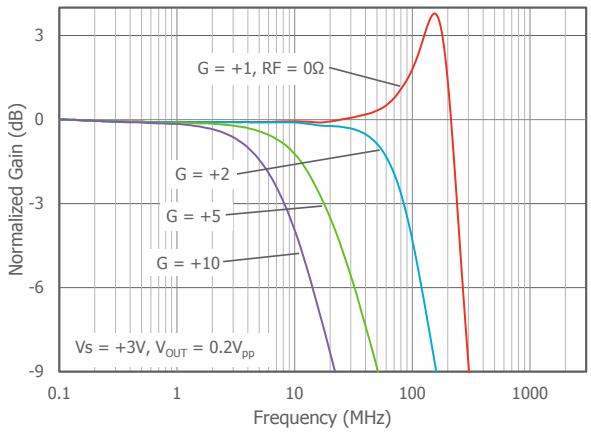

Inverting Freq. Resp.

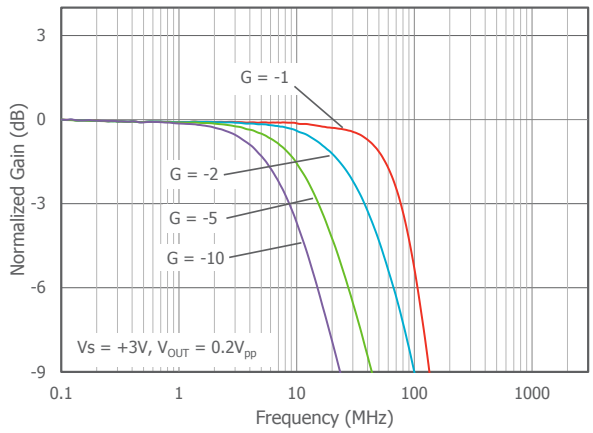

Freq. Resp. vs C_L

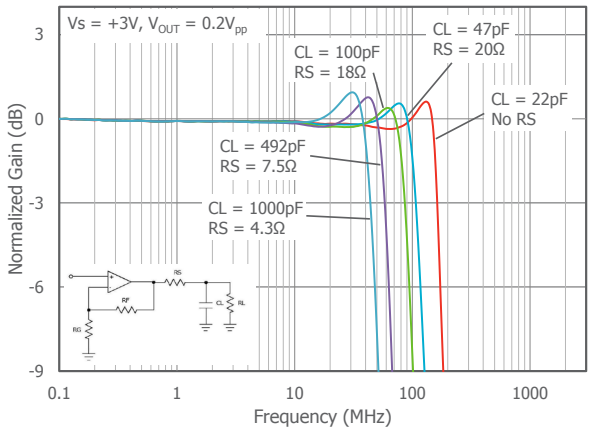

Freq. Resp. vs R_L

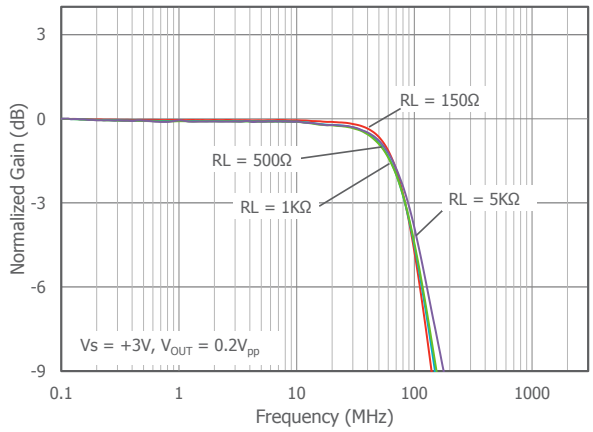

Large Signal Freq. Resp.

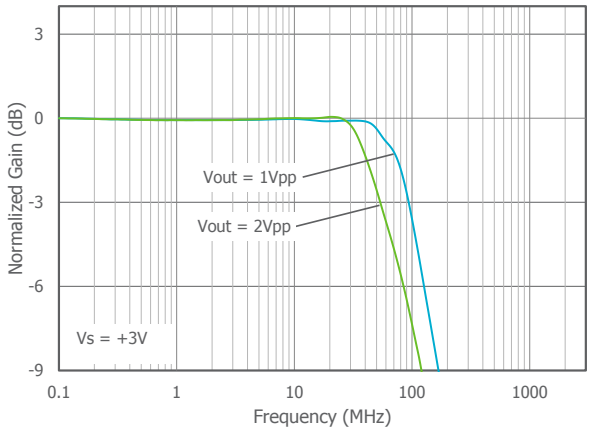

-3dB BW vs Output Voltage

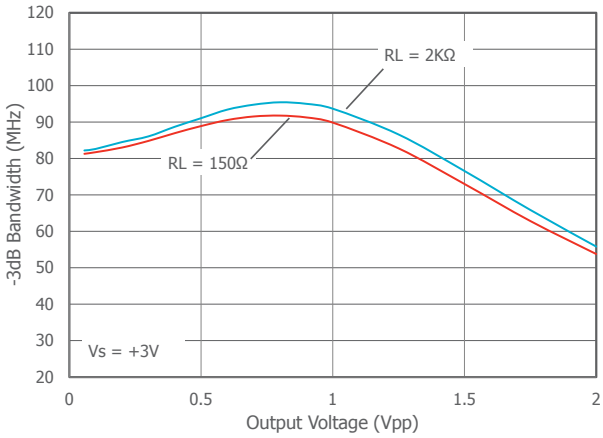

Typical Performance Characteristics

T_A = 25°C, V_S = +3V, R_L = 2kΩ to V_S/2, G = +2, R_F = 1.5kΩ; unless otherwise noted.

Input Voltage Noise vs Freq.

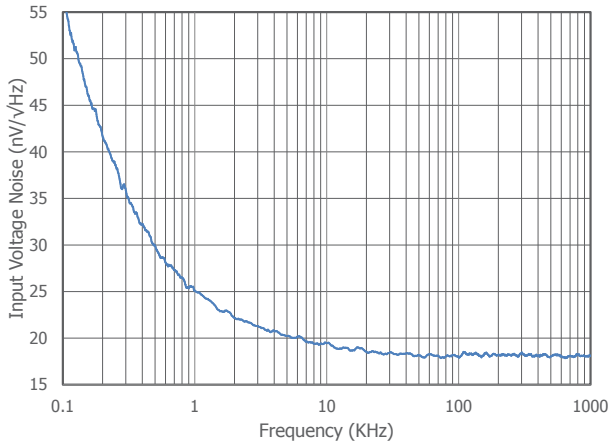

2nd Harmonic Distortion vs R_L over Freq.

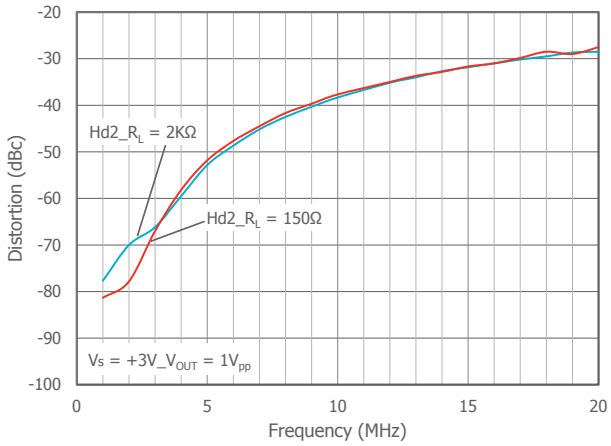

3rd Harmonic Distortion vs R_L over Freq.

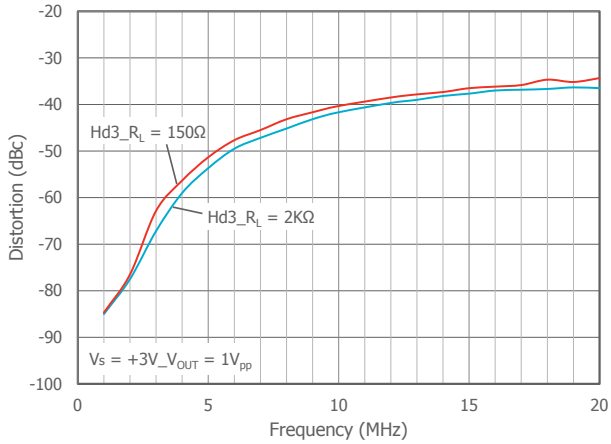

2nd Harmonic Distortion vs V_O over Freq.

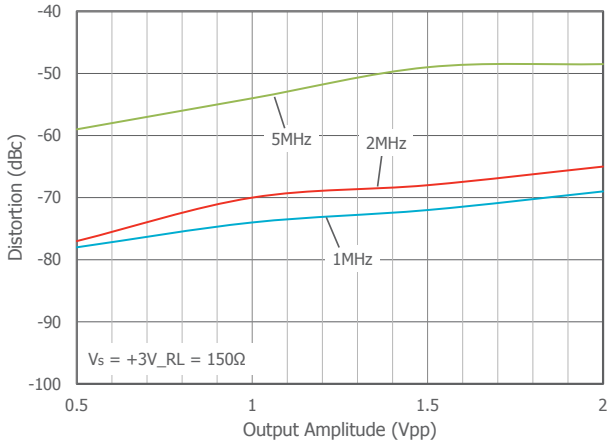

3rd Harmonic Distortion vs V_O over Freq.

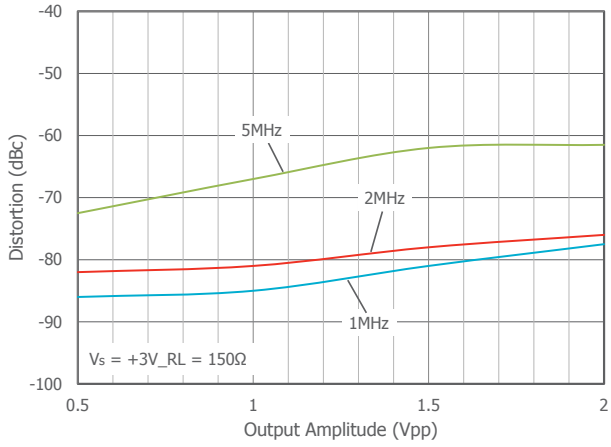

Non-Inverting Small Signal Pulse Response

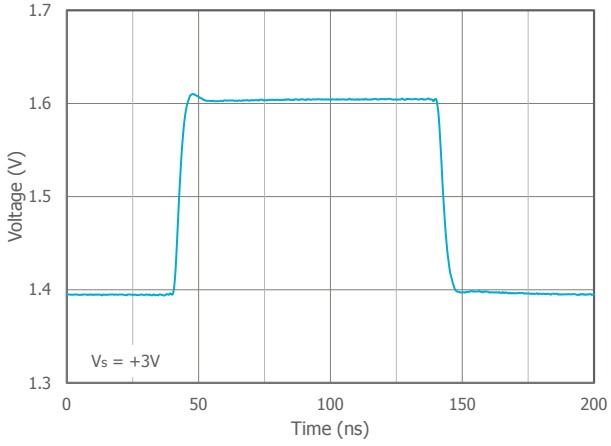

Typical Performance Characteristics

T_A = 25°C, V_S = +3V, R_L = 2kΩ to V_S/2, G = +2, R_F = 1.5kΩ; unless otherwise noted.

Non-Inverting Large Signal Pulse Response

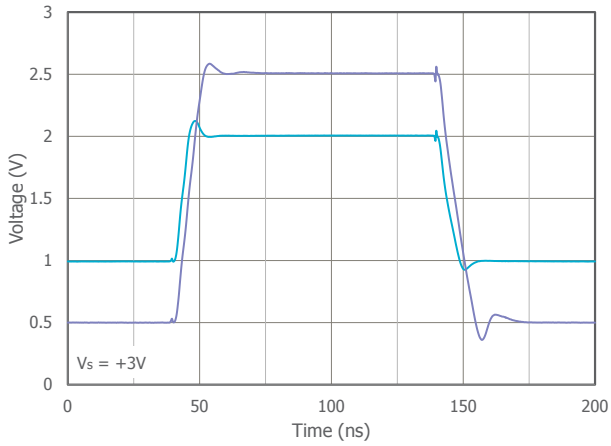

Crosstalk vs Frequency (XR8052)

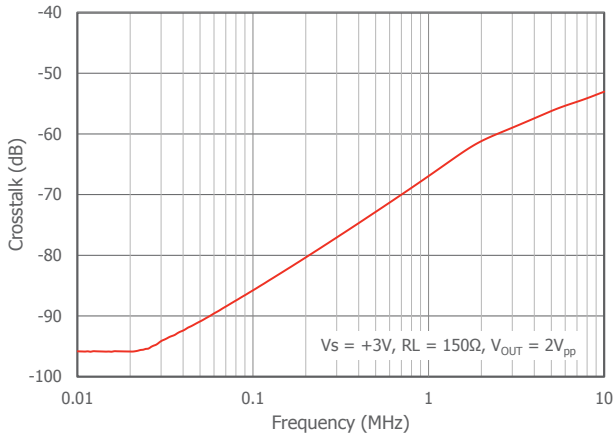

Differential Gain & Phase_DC Coupled

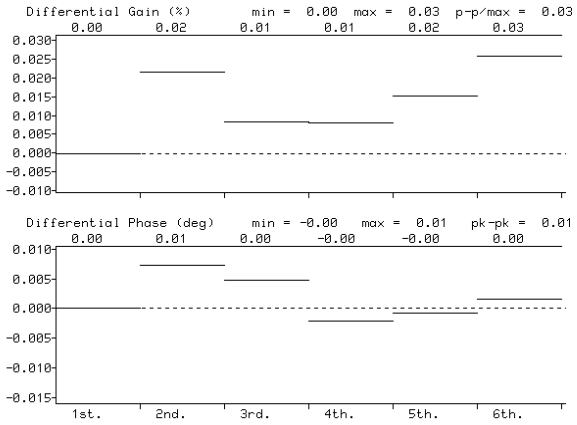

Differential Gain & Phase_AC Coupled

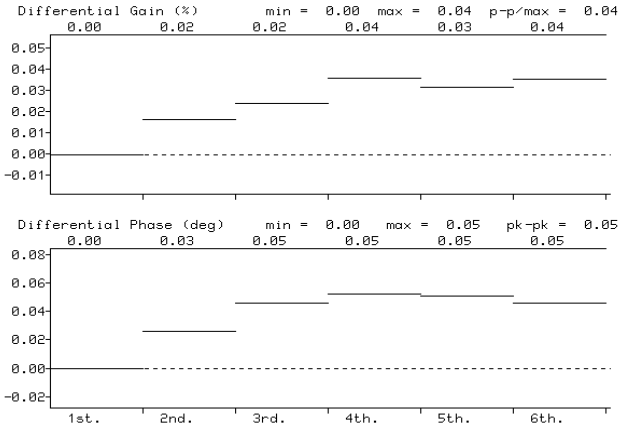

Typical Performance Characteristics

T_A = 25°C, V_S = +5V, R_L = 2kΩ to V_S/2, G = +2, R_F = 1.5kΩ; unless otherwise noted.

Non-Inverting Freq. Resp.

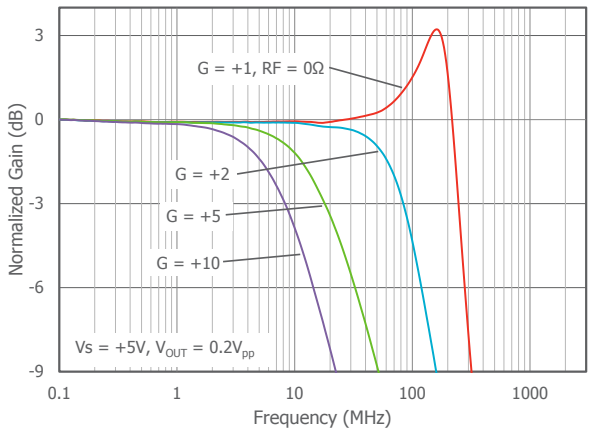

Inverting Freq. Resp.

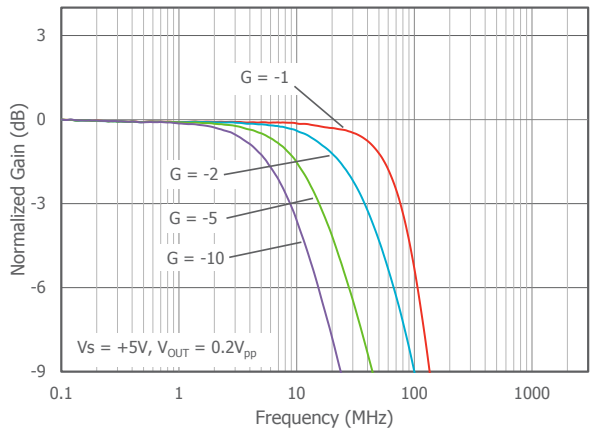

Freq. Resp. vs C_L

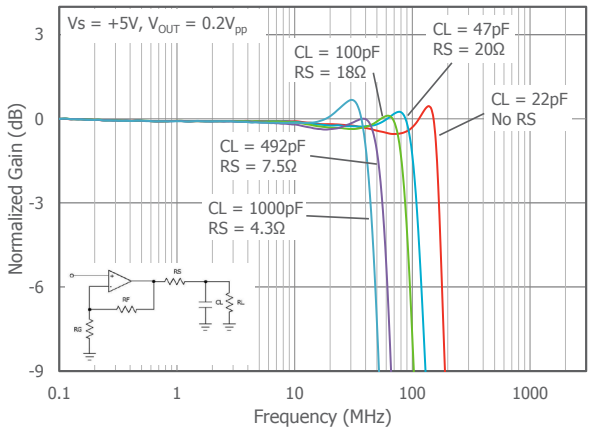

Freq. Resp. vs R_L

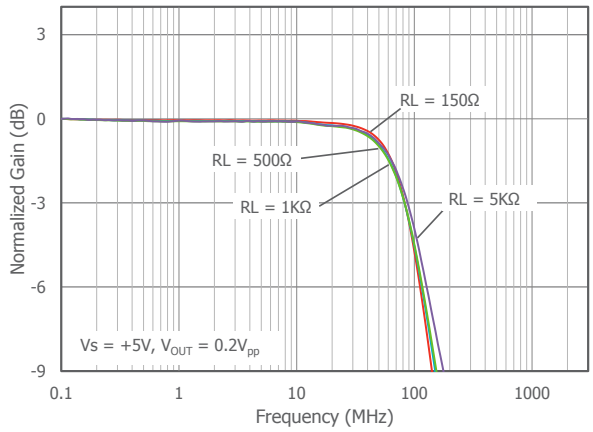

Large Signal Freq. Resp.

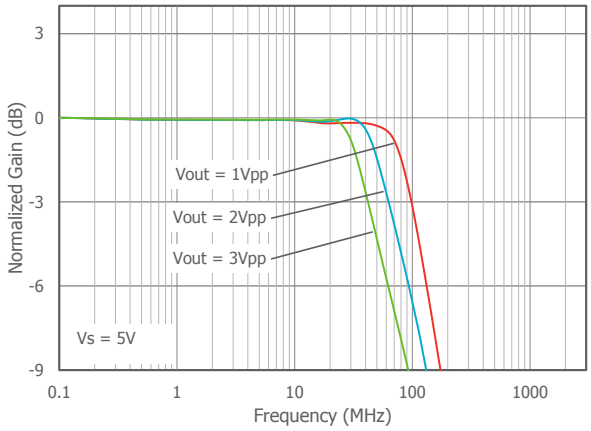

-3dB BW vs Output Voltage

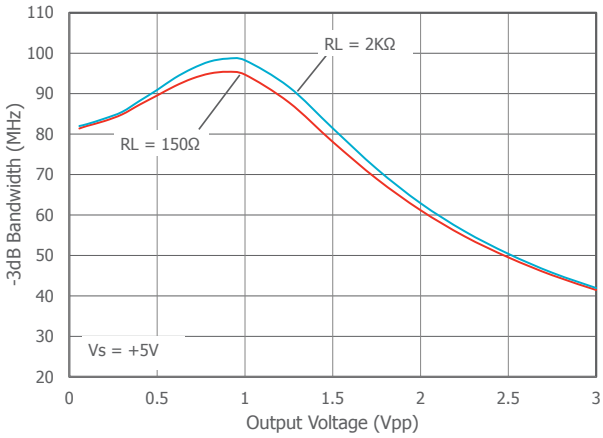

Typical Performance Characteristics

T_A = 25°C, V_S = +5V, R_L = 2kΩ to V_S/2, G = +2, R_F = 1.5kΩ; unless otherwise noted.

Input Voltage Noise vs Freq.

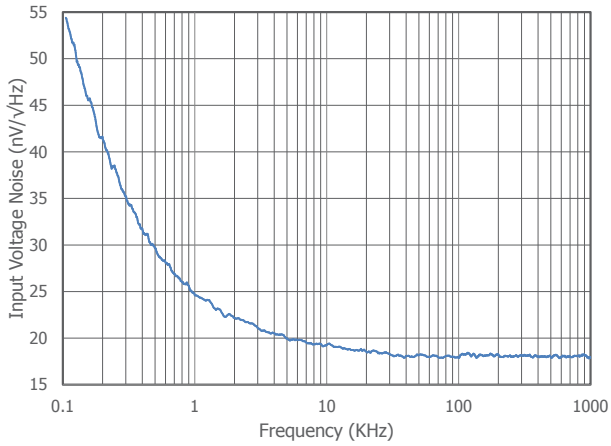

2nd Harmonic Distortion vs R_L over Freq.

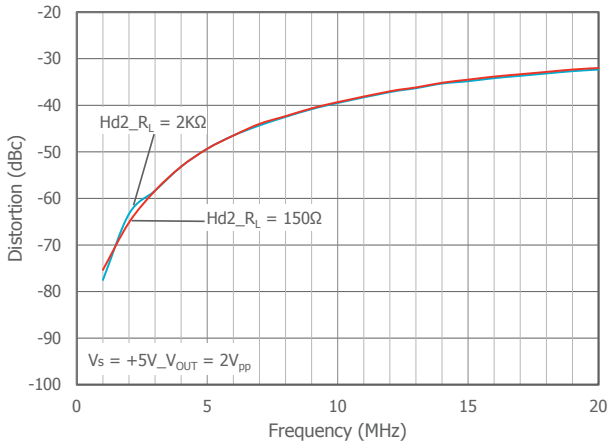

3rd Harmonic Distortion vs R_L over Freq.

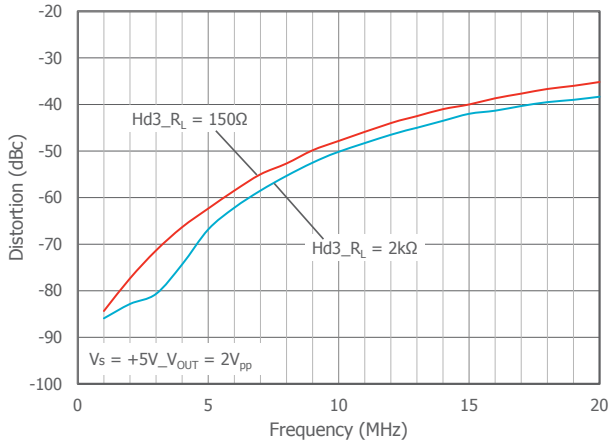

2nd Harmonic Distortion vs V_O over Freq.

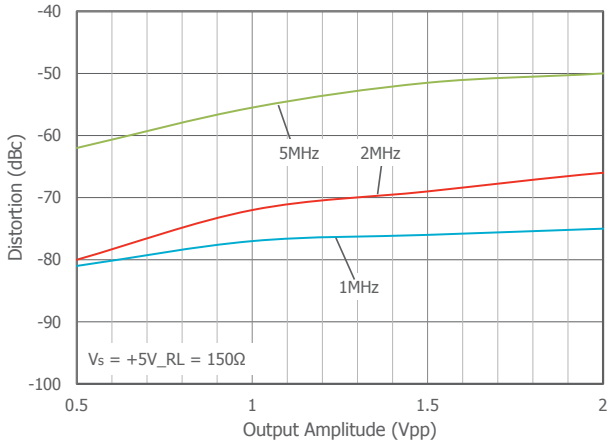

3rd Harmonic Distortion vs V_O over Freq.

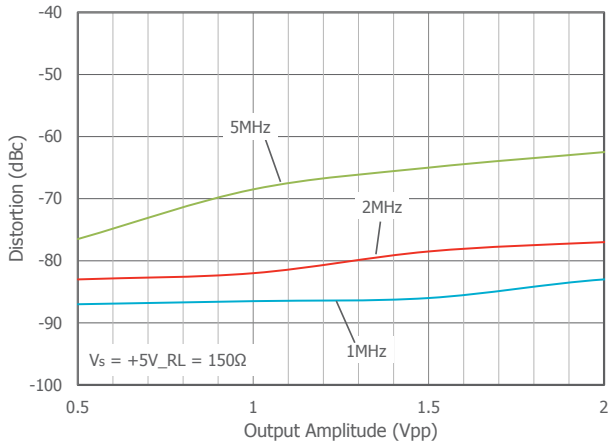

Non-Inverting Small Signal Pulse Response

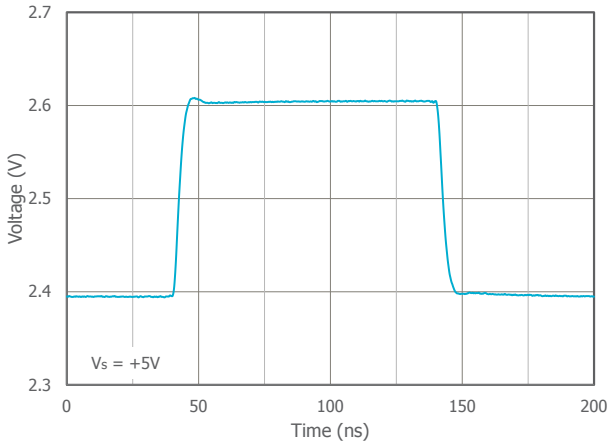

Typical Performance Characteristics

T_A = 25°C, V_S = +5V, R_L = 2kΩ to V_S/2, G = +2, R_F = 1.5kΩ; unless otherwise noted.

Non-Inverting Large Signal Pulse Response

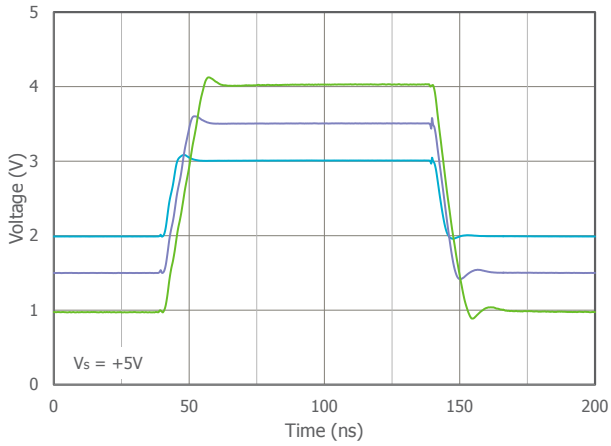

Crosstalk vs Frequency (XR8052)

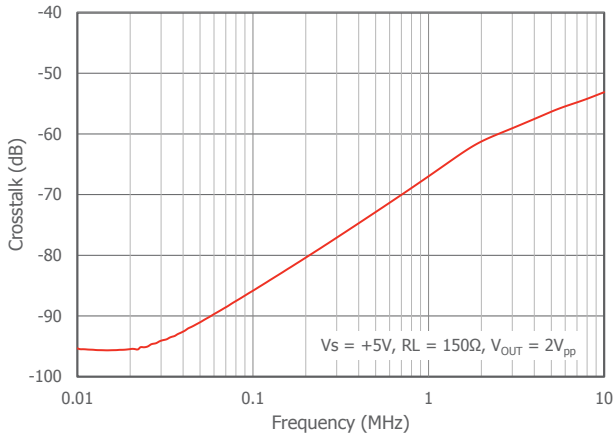

Differential Gain & Phase_DC Coupled

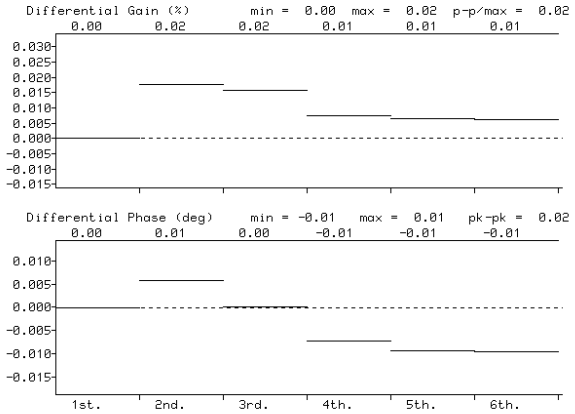

Differential Gain & Phase_AC Coupled

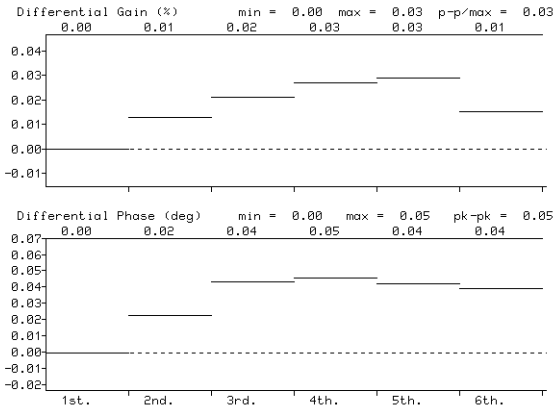

Typical Performance Characteristics

T_A = 25°C, V_S = ±5V, R_L = 2kΩ to GND, G = +2, R_F = 1.5kΩ; unless otherwise noted.

Non-Inverting Freq. Resp.

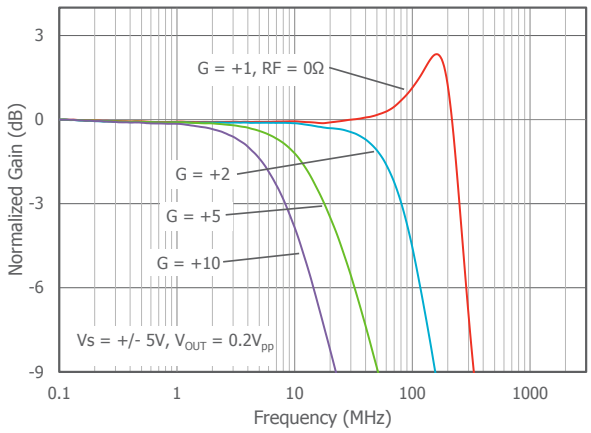

Inverting Freq. Resp.

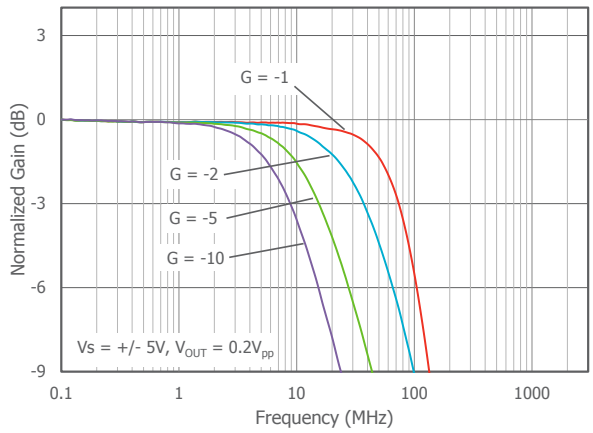

Freq. Resp. vs C_L

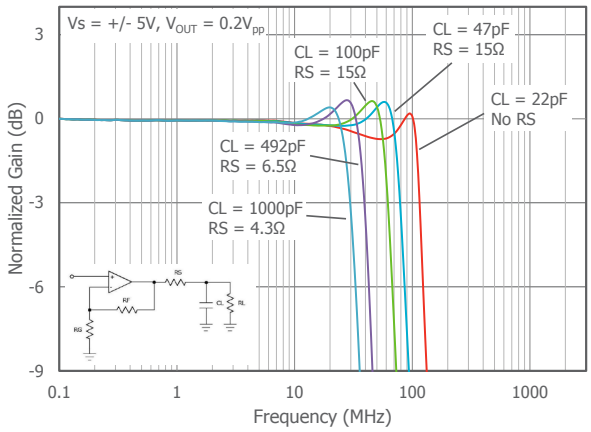

Freq. Resp. vs R_L

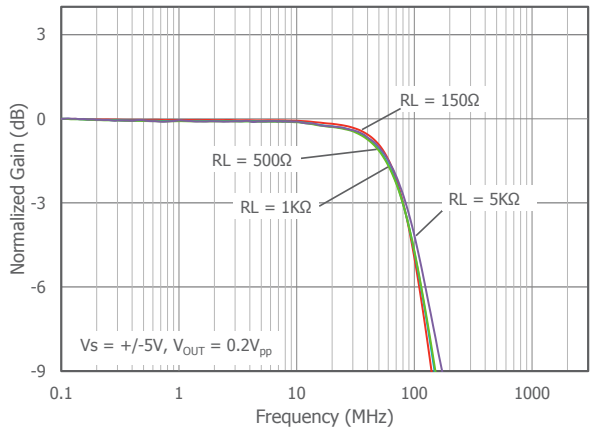

Large Signal Freq. Resp.

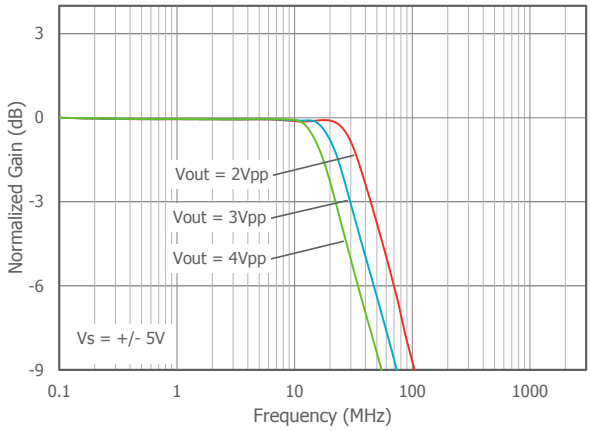

-3dB BW vs Output Voltage

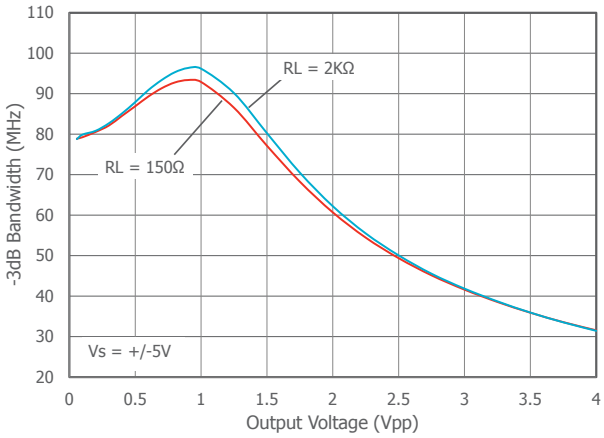

Typical Performance Characteristics

T_A = 25°C, V_S = ±5V, R_L = 2kΩ to GND, G = +2, R_F = 1.5kΩ; unless otherwise noted.

Input Voltage Noise vs Freq.

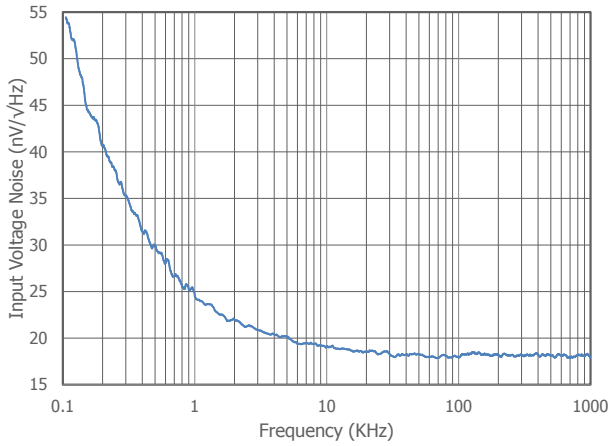

2nd Harmonic Distortion vs R_L over Freq.

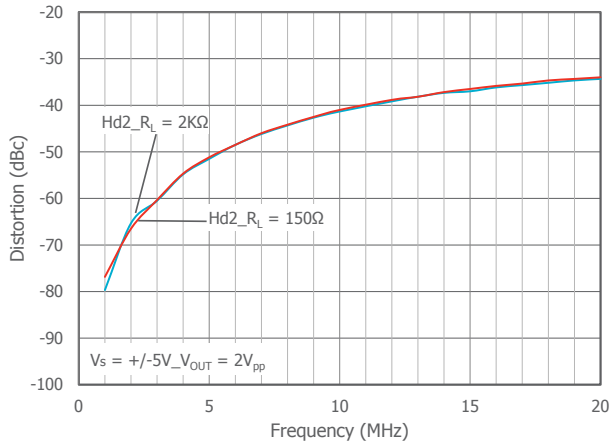

3rd Harmonic Distortion vs R_L over Freq.

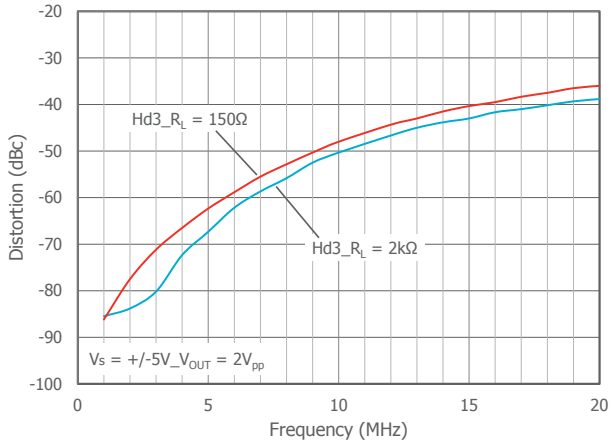

2nd Harmonic Distortion vs V_O over Freq.

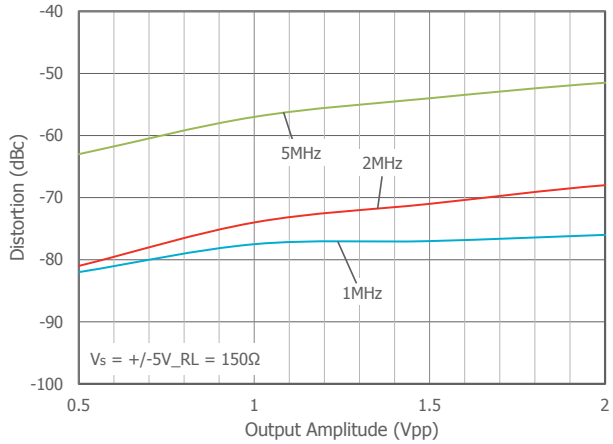

3rd Harmonic Distortion vs V_O over Freq.

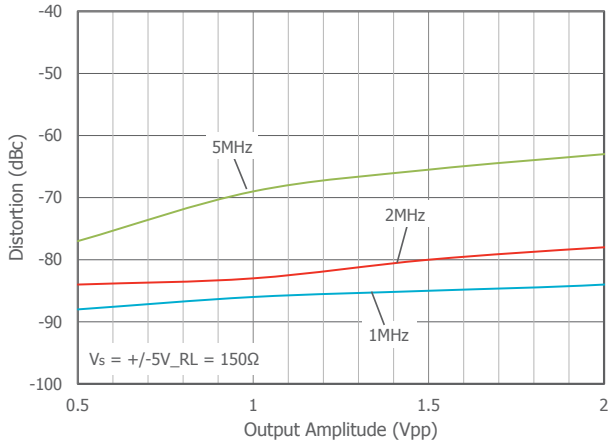

Non-Inverting Small Signal Pulse Response

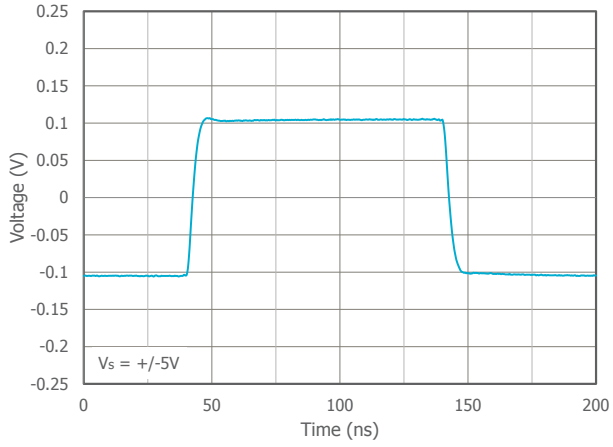

© 2007-2014 Exar Corporation

Typical Performance Characteristics

T_A = 25°C, V_S = ±5V, R_L = 2kΩ to GND, G = +2, R_F = 1.5kΩ; unless otherwise noted.

Non-Inverting Large Signal Pulse Response

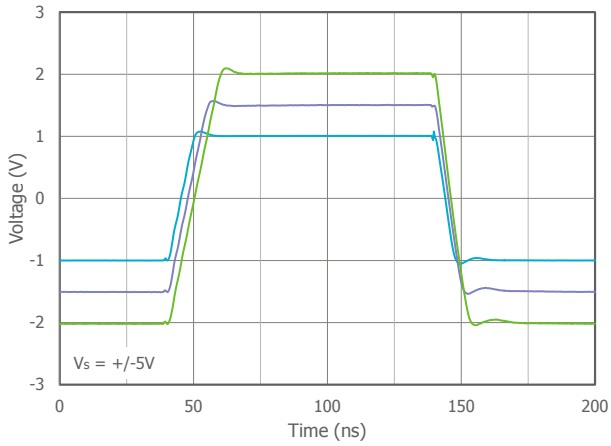

Crosstalk vs Frequency (XR8052)

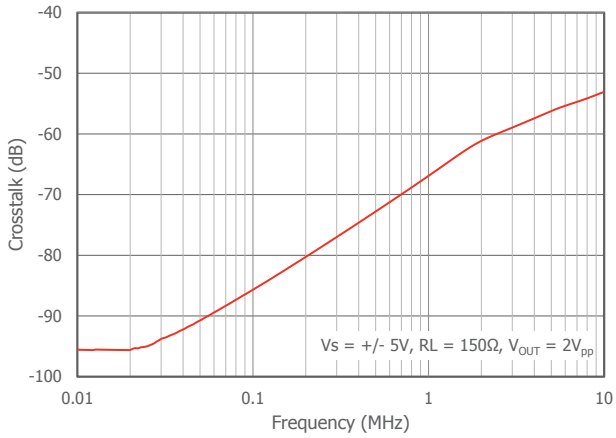

Differential Gain & Phase_DC Coupled

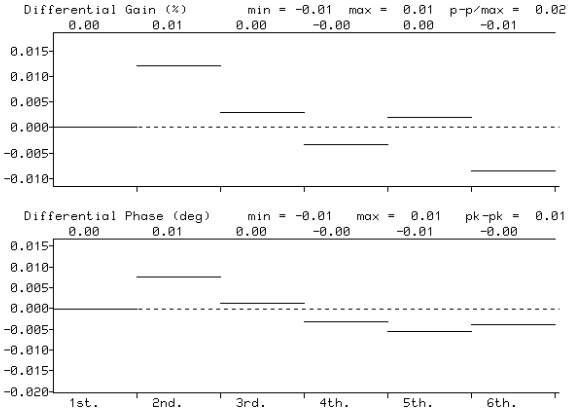

Differential Gain & Phase_AC Coupled

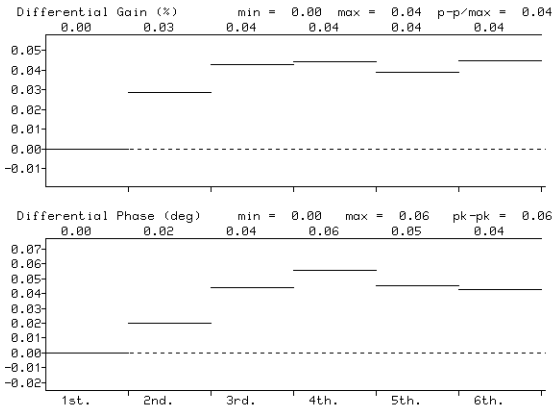

Application Information

General Description

The XR8051, XR8052, and XR8054 are single supply, general purpose, voltage-feedback amplifiers fabricated on a complementary bipolar process using a patent pending topography. They feature a rail-to-rail output stage and is unity gain stable.

The common mode input range extends to 300mV below ground and to 0.9V below V_S. Exceeding these values will not cause phase reversal. However, if the input voltage exceeds the rails by more than 0.5V, the input ESD devices will begin to conduct. The output will stay at the rail during this overdrive condition.

The design is short circuit protected and offers "soft" saturation protection that improves recovery time.

Figures 1, 2, and 3 illustrate typical circuit configurations for non-inverting, inverting, and unity gain topologies for dual supply applications. They show the recommended bypass capacitor values and overall closed loop gain equations. Figure 4 shows the typical non-inverting gain circuit for single supply applications.

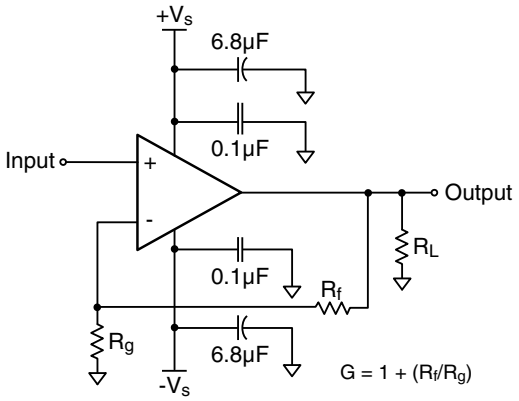

Figure 1: Typical Non-Inverting Gain Circuit

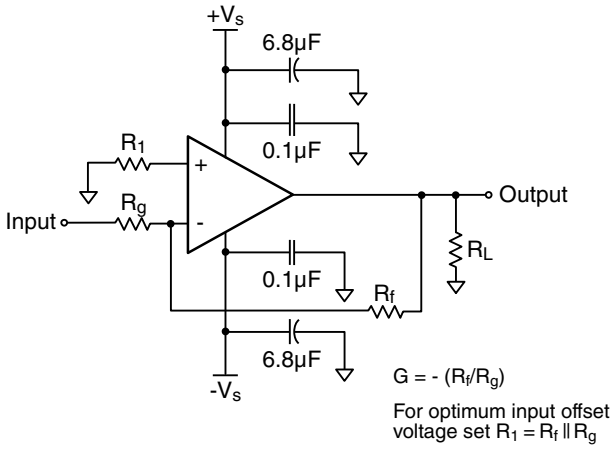

Figure 2: Typical Inverting Gain Circuit

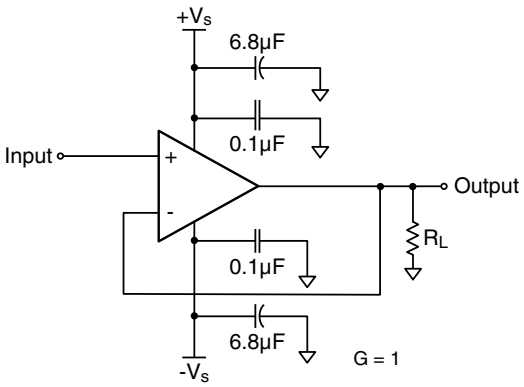

Figure 3: Unity Gain Circuit

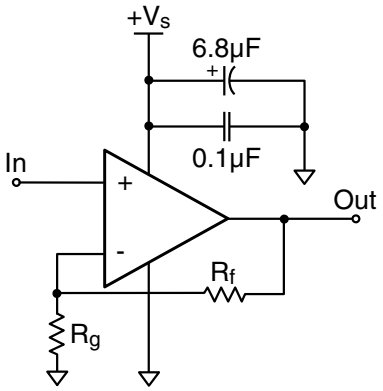

Figure 4: Single Supply Non-Inverting Gain Circuit

Overdrive Recovery

For an amplifier, an overdrive condition occurs when the output and/or input ranges are exceeded. The recovery time varies based on whether the input or output is overdriven and by how much the ranges are exceeded. The XR8051, XR8052, and XR8054 will typically recover in less than 20ns from an overdrive condition. Figure 5 shows the XR8052 in an overdriven condition.

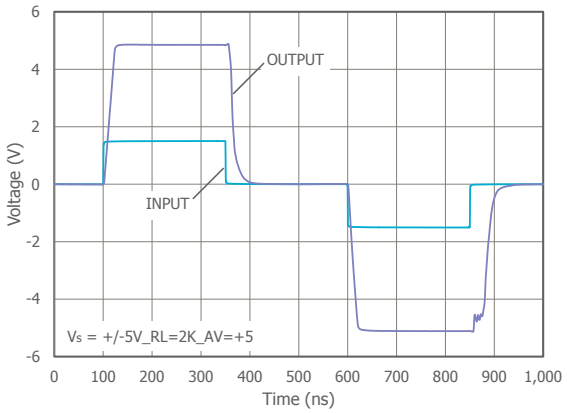

Figure 5: Overdrive Recovery

Power Dissipation

Power dissipation should not be a factor when operating under the stated 2kΩ load condition. However, applications with low impedance, DC coupled loads should be analyzed to ensure that maximum allowed junction temperature is not exceeded. Guidelines listed below can be used to verify that the particular application will not cause the device to operate beyond it's intended operating range.

Maximum power levels are set by the absolute maximum junction rating of 170°C. To calculate the junction temperature, the package thermal resistance value $Theta_{JA}$ (θ_{JA}) is used along with the total die power dissipation.

$$T_{Junction} = T_{Ambient} + (\theta_{JA} \times P_D)$$

Where $T_{Ambient}$ is the temperature of the working environment.

In order to determine P_D, the power dissipated in the load needs to be subtracted from the total power delivered by the supplies.

$$P_D = P_{supply} - P_{load}$$

Supply power is calculated by the standard power equation.

$$P_{supply} = V_{supply} \times I_{RMSsupply}$$

$$V_{supply} = V_{S+} - V_{S-}$$

Power delivered to a purely resistive load is:

$$P_{load} = ((V_{load})_{RMS}^2)/Rload_{eff}$$

The effective load resistor ($Rload_{eff}$) will need to include the effect of the feedback network. For instance,

$Rload_{eff}$ in Figure 3 would be calculated as:

$$R_L \parallel (R_f + R_g)$$

These measurements are basic and are relatively easy to perform with standard lab equipment. For design purposes however, prior knowledge of actual signal levels and load impedance is needed to determine the dissipated power. Here, P_D can be found from

$$P_D = P_{Quiescent} + P_{Dynamic} - P_{load}$$

Quiescent power can be derived from the specified I_S values along with known supply voltage, V_{supply}. Load power can be calculated as above with the desired signal amplitudes using:

$$(V_{load})_{RMS} = V_{peak} / \sqrt{2}$$

$$(I_{load})_{RMS} = (V_{load})_{RMS} / Rload_{eff}$$

The dynamic power is focused primarily within the output stage driving the load. This value can be calculated as:

$$P_{Dynamic} = (V_{S+} - V_{load})_{RMS} \times (I_{load})_{RMS}$$

Assuming the load is referenced in the middle of the power rails or $V_{supply}/2$.

The XR8051 is short circuit protected. However, this may not guarantee that the maximum junction temperature (+150°C) is not exceeded under all conditions. Figure 6 shows the maximum safe power dissipation in the package vs. the ambient temperature for the packages available.

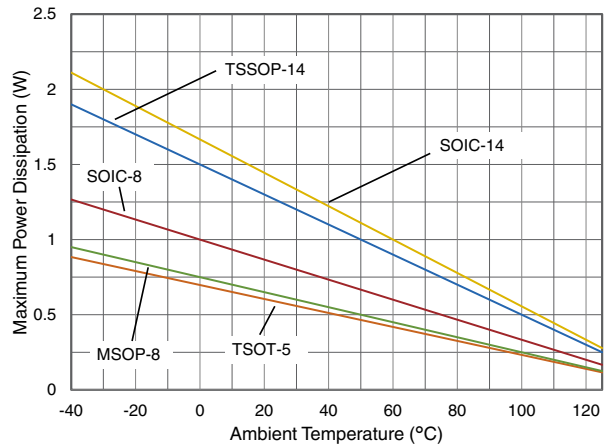

Figure 6. Maximum Power Derating

Driving Capacitive Loads

Increased phase delay at the output due to capacitive loading can cause ringing, peaking in the frequency response, and possible unstable behavior. Use a series resistance, R_S, between the amplifier and the load to help improve stability and settling performance. Refer to Figure 7.

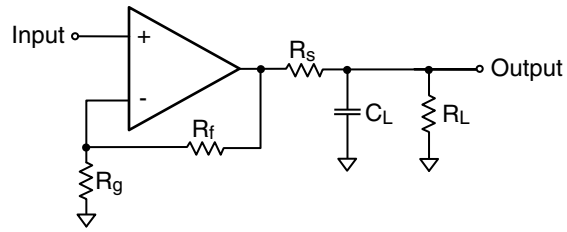

Figure 7. Addition of R_S for Driving Capacitive Loads

Table 1 provides the recommended R_S for various capacitive loads. The recommended R_S values result in approximately <1dB peaking in the frequency response.

C_L (pF)	R_S (Ω)	-3dB BW (MHz)
22pF	0	120
47pF	15	80
100pF	15	65
492pF	6.5	40

Table 1: Recommended R_S vs. C_L

For a given load capacitance, adjust R_S to optimize the tradeoff between settling time and bandwidth. In general, reducing R_S will increase bandwidth at the expense of additional overshoot and ringing.

Layout Considerations

General layout and supply bypassing play major roles in high frequency performance. Exar has evaluation boards to use as a guide for high frequency layout and as an aid in device testing and characterization. Follow the steps below as a basis for high frequency layout:

- Include 6.8µF and 0.1µF ceramic capacitors for power supply decoupling
- Place the 6.8µF capacitor within 0.75 inches of the power pin
- Place the 0.1µF capacitor within 0.1 inches of the power pin
- Remove the ground plane under and around the part, especially near the input and output pins to reduce parasitic capacitance
- Minimize all trace lengths to reduce series inductances

Refer to the evaluation board layouts below for more information.

Evaluation Board Information

The following evaluation boards are available to aid in the testing and layout of these devices:

Evaluation Board #	Products
CEB002	XR8051 in TSOT
CEB003	XR8051 in SOIC
CEB006	XR8052 in SOIC
CEB010	XR8052 in MSOP
CEB018	XR8054 in TSSOP

Evaluation Board Schematics

Evaluation board schematics and layouts are shown in Figures 8-14 These evaluation boards are built for dual-supply operation. Follow these steps to use the board in a single-supply application:

1. Short $-V_S$ to ground.
2. Use C3 and C4, if the $-V_S$ pin of the amplifier is not directly connected to the ground plane.

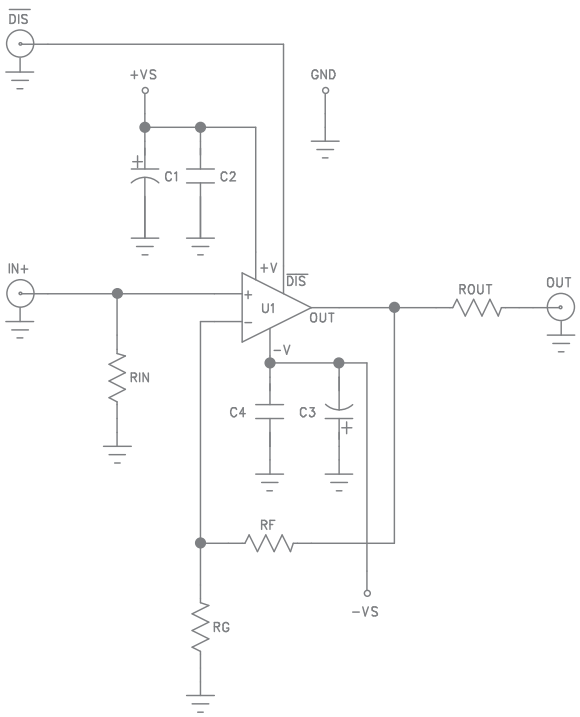

Figure 8. CEB002 & CEB003 Schematic

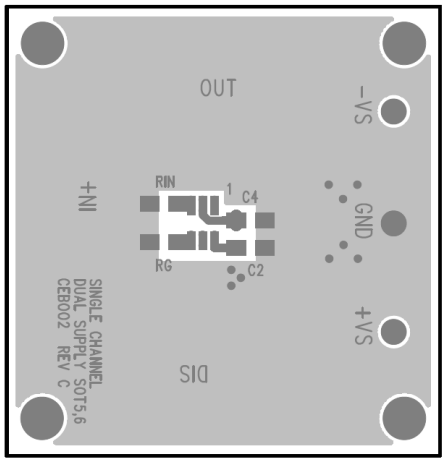

Figure 9. CEB002 Top View

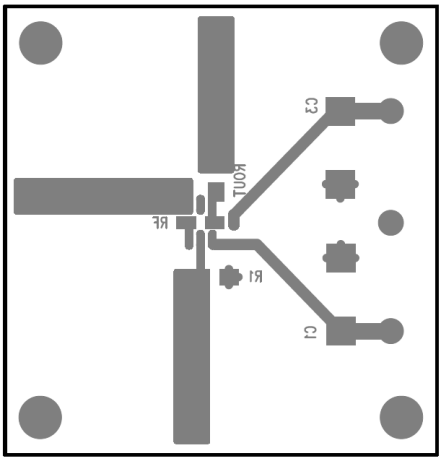

Figure 10. CEB002 Bottom View

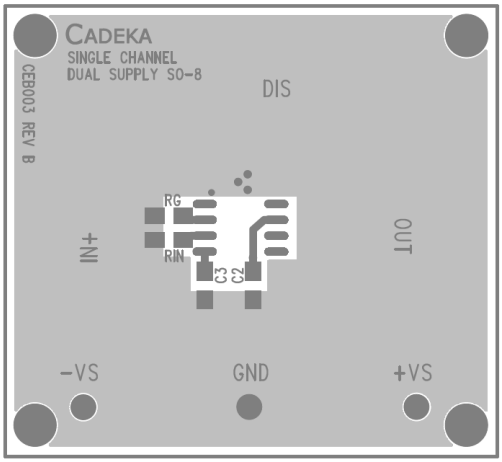

Figure 11. CEB003 Top View

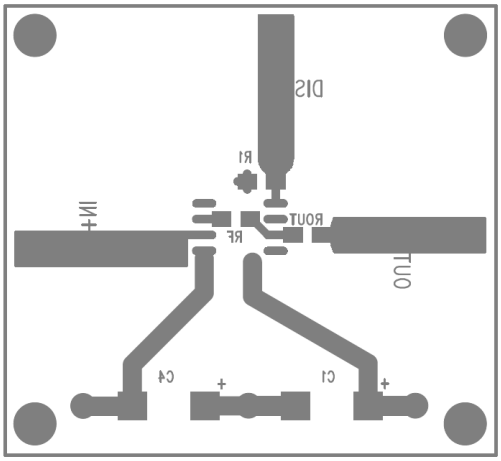

Figure 12. CEB003 Bottom View

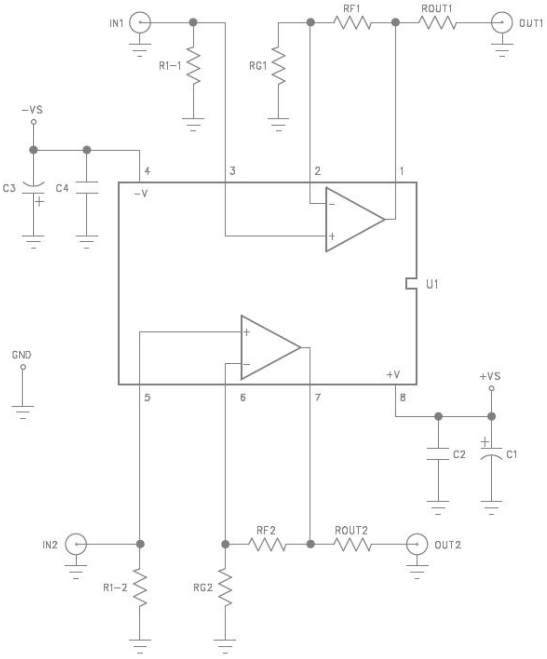

Figure 13. CEB006 & CEB010 Schematic

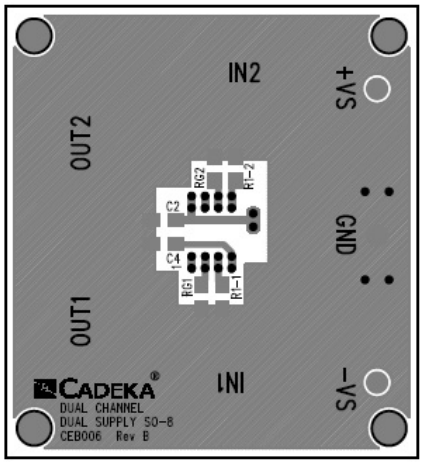

Figure 14. CEB006 Top View

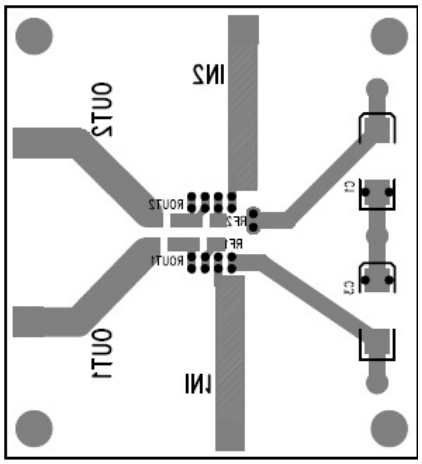

Figure 15. CEB006 Bottom View

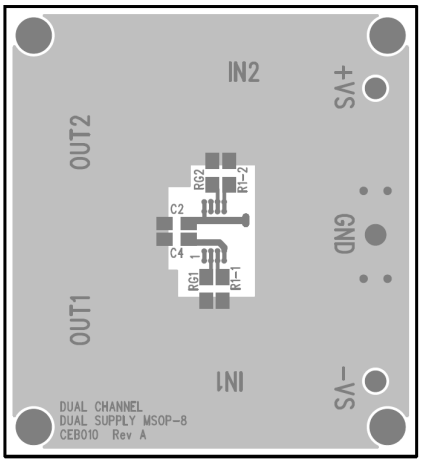

Figure 16. CEB010 Top View

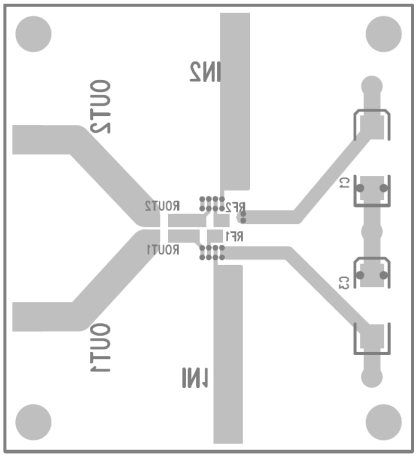

Figure 17. CEB010 Bottom View

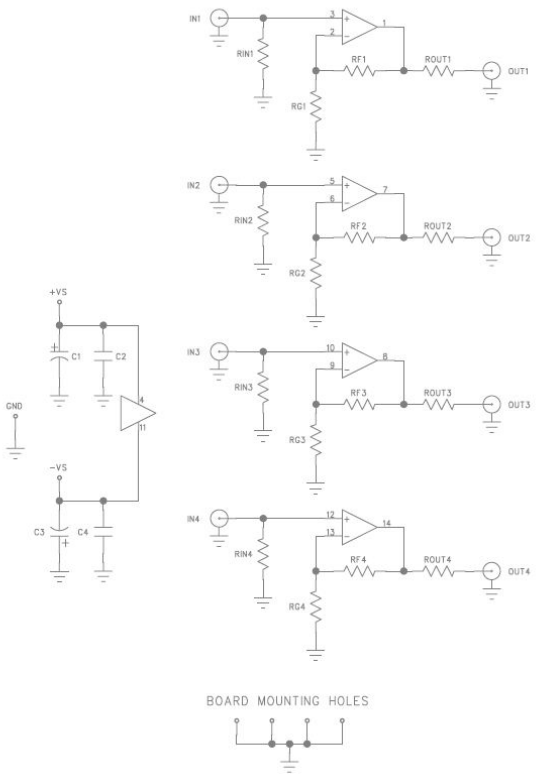

Figure 18. CEB018 Schematic

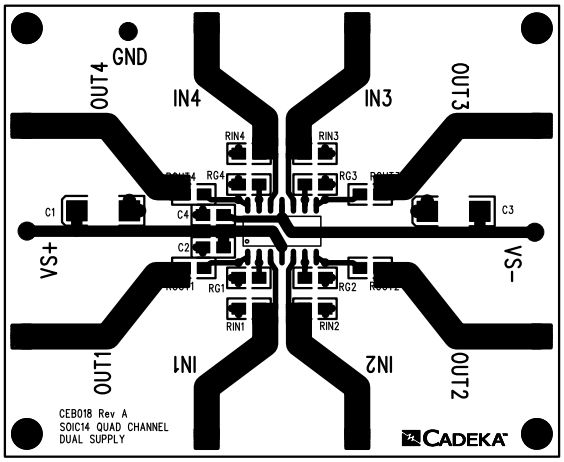

Figure 19. CEB018 Top View

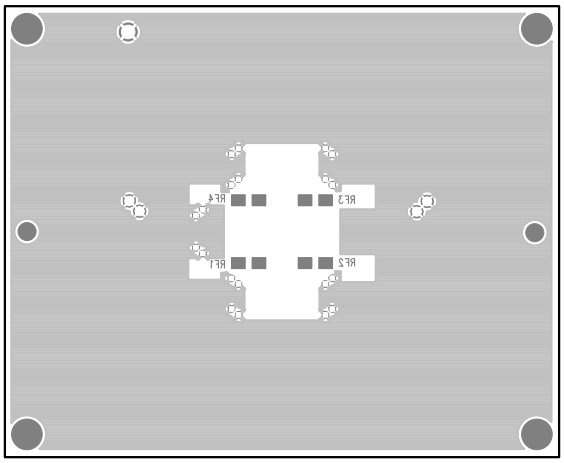

Figure 20. CEB018 Bottom View

Mechanical Dimensions

TSOT-5 Package

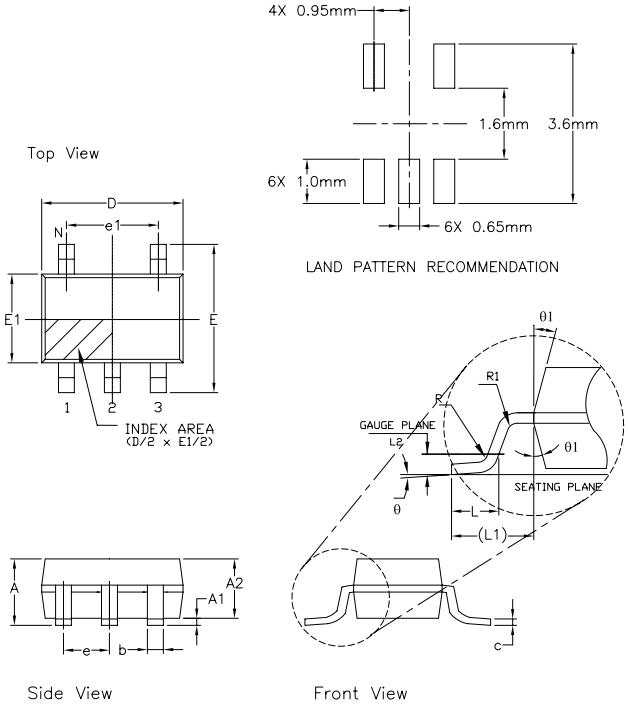

5 Pin TSOT (OPTION 2)						
SYMBOLS	DIMENSION IN MM (Control Unit)			DIMENSION IN INCH (Reference Unit)		
	MIN	NOM	MAX	MIN	NOM	MAX
A	0.75	—	0.80	0.030	—	0.031
A1	0.00	—	0.05	0.000	—	0.002
A2	0.70	0.75	0.78	0.028	0.030	0.031
b	0.35	—	0.50	0.012	—	0.020
c	0.10	—	0.20	0.003	—	0.008
D	2.90 BSC			0.114 BSC		
E	2.80 BSC			0.110 BSC		
E1	1.60 BSC			0.063 BSC		
e	0.95 BSC			0.038 BSC		
e1	1.90 BSC			0.075 BSC		
L	0.37	0.45	0.60	0.012	0.018	0.024
L1	0.60 REF			0.024 REF		
L2	0.25 BSC			0.010 BSC		
R	0.10	—	—	0.004	—	—
R1	0.10	—	0.25	0.004	—	0.010
θ	0°	4°	8°	0°	4°	8°
θ1	4°	10°	12°	4°	10°	12°
N	5			5		

MSOP-8 Package

8 Pin MSOP JEDEC MO-187 Variation AA						
SYMBOLS	DIMENSIONS IN MM (Control Unit)			DIMENSIONS IN INCH (Reference Unit)		
	MIN	NOM	MAX	MIN	NOM	MAX
A	—	—	1.10	—	—	0.043
A1	0.00	—	0.15	0.000	—	0.006
A2	0.75	0.85	0.95	0.030	0.033	0.037
b	0.22	—	0.38	0.009	—	0.015
c	0.08	—	0.23	0.003	—	0.009
E	4.90 BSC			0.193 BSC		
E1	3.00 BSC			0.118 BSC		
e	0.65 BSC			0.026 BSC		
e1	1.95 BSC			0.077 BSC		
L	0.40	0.60	0.80	0.016	0.024	0.031
L1	0.95 REF			0.037 REF		
L2	0.25 BSC			0.010 BSC		
R	0.07	—	—	0.003	—	—
R1	0.07	—	—	0.003	—	—
θ	0°	—	8°	0°	—	8°
θ1	5°	—	15°	5°	—	15°
D	3.00 BSC			0.118 BSC		
N	8			8		

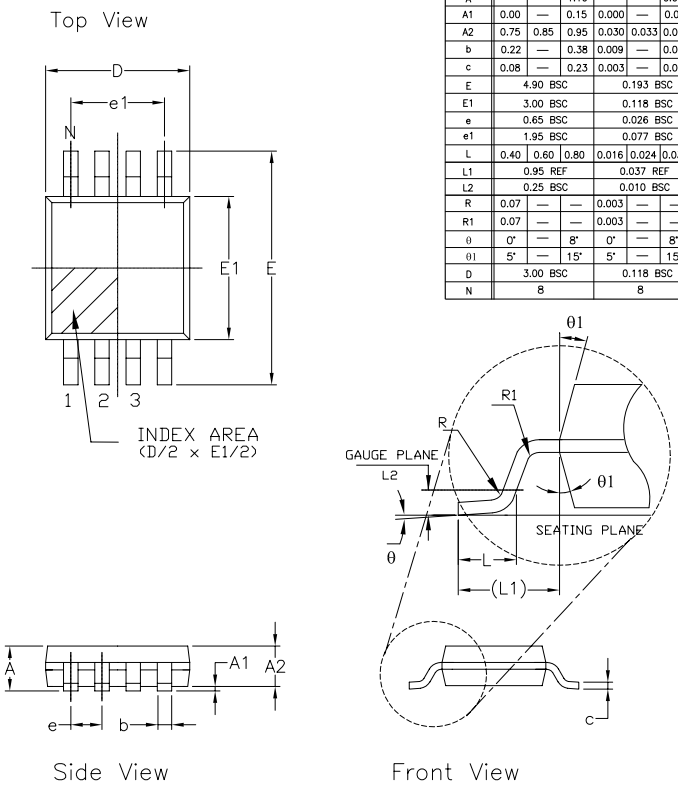

SOIC-8 Package

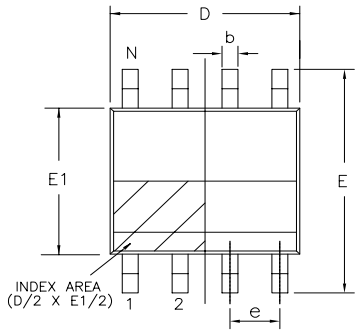

Top View

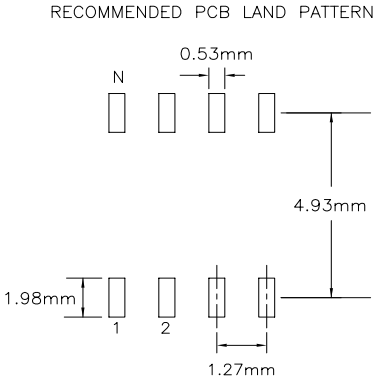

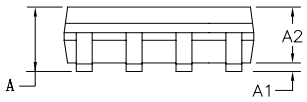

Side View

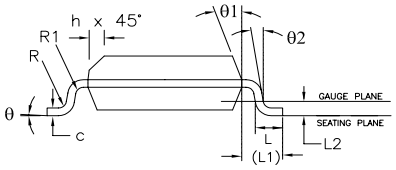

Front View

8 Pin SOICN JEDEC MS-012 Variation AA						
SYMBOLS	DIMENSIONS IN MM (Control Unit)			DIMENSIONS IN INCH (Reference Unit)		
	MIN	NOM	MAX	MIN	NOM	MAX
A	1.35	—	1.75	0.053	—	0.069
A1	0.10	—	0.25	0.004	—	0.010
A2	1.25	—	1.65	0.049	—	0.065
b	0.31	—	0.51	0.012	—	0.020
c	0.17	—	0.25	0.007	—	0.010
E	6.00 BSC			0.236 BSC		
E1	3.90 BSC			0.154 BSC		
e	1.27 BSC			0.050 BSC		
h	0.25	—	0.50	0.010	—	0.020
L	0.40	—	1.27	0.016	—	0.050
L1	1.04 REF			0.041 REF		
L2	0.25 BSC			0.010 BSC		
R	0.07	—	—	0.003	—	—
R1	0.07	—	—	0.003	—	—
θ	0°	—	8°	0°	—	8°
θ1	5°	—	15°	5°	—	15°
θ2	0°	—	—	0°	—	—
D	4.90 BSC			0.193 BSC		
N	8			8		

SOIC-14 Package

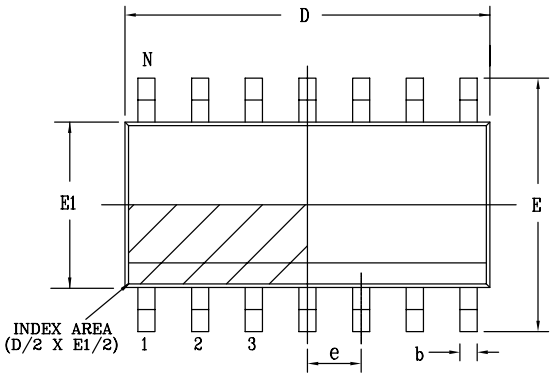

Top View

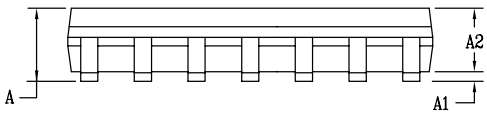

Side View

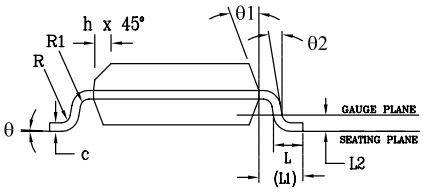

Front View

PACKAGE OUTLINE NSOIC .150" BODY JEDEC MS-012						
SYMBOLS	COMMON DIMENSIONS IN MM (Control Unit)			COMMON DIMENSIONS IN INCH (Reference Unit)		
	MIN	NOM	MAX	MIN	NOM	MAX
A	1.35	—	1.75	0.053	—	0.069
A1	0.10	—	0.25	0.004	—	0.010
A2	1.25	—	1.65	0.049	—	0.065
b	0.31	—	0.51	0.012	—	0.020
c	0.17	—	0.25	0.007	—	0.010
E	6.00 BSC			0.236 BSC		
E1	3.90 BSC			0.154 BSC		
e	1.27 BSC			0.050 BSC		
h	0.25	—	0.50	0.010	—	0.020
L	0.40	—	1.27	0.016	—	0.050
L1	1.04 REF			0.041 REF		
L2	0.25 BSC			0.010 BSC		
R	0.07	—	—	0.003	—	—
R1	0.07	—	—	0.003	—	—
θ	0°	—	8°	0°	—	8°
θ1	5°	—	15°	5°	—	15°
θ2	0°	—	—	0°	—	—
D	SEE VARIATIONS					
N	SEE VARIATIONS					

VARIATION D							
VARIATIONS	DIMENSIONS IN MM (Control Unit)			DIMENSIONS IN INCH (Reference Unit)			N
	MIN	NOM	MAX	MIN	NOM	MAX	
AA	4.90 BSC			0.193 BSC			8
AB	8.65 BSC			0.341 BSC			14
AC	9.90 BSC			0.390 BSC			16

TSSOP-14 Package

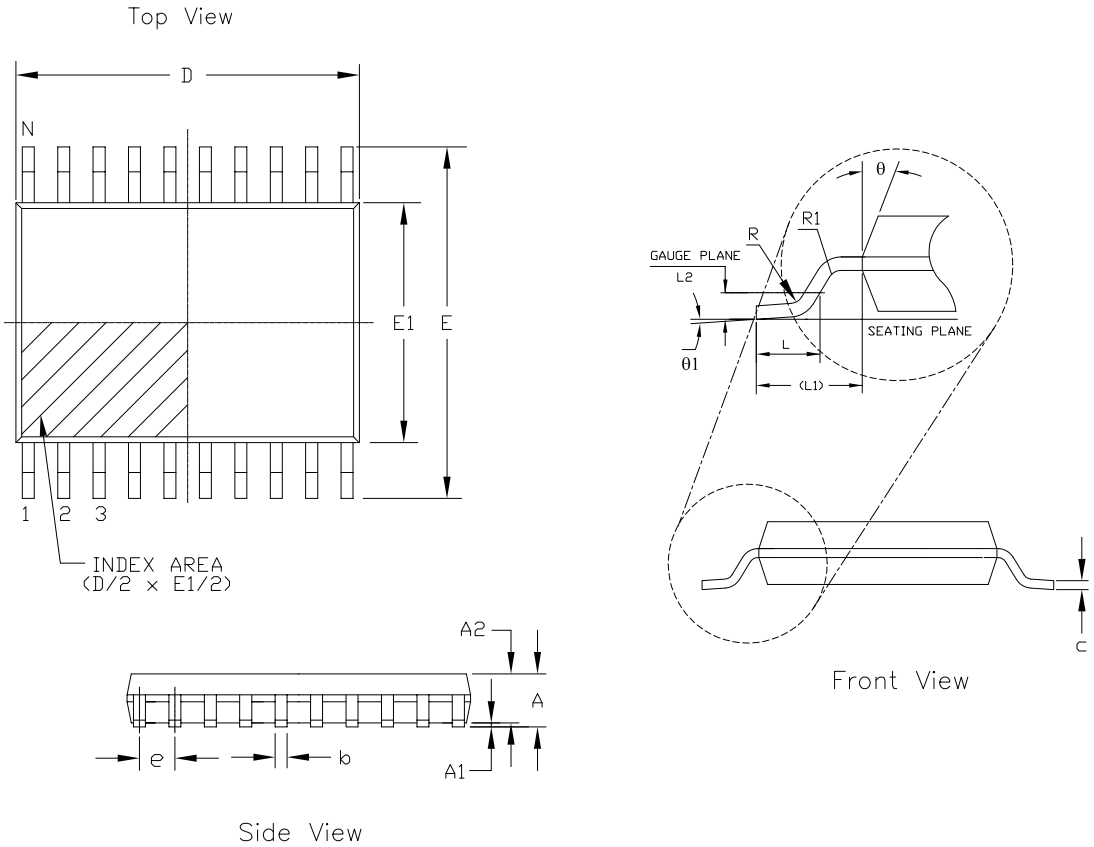

14 Pin TSSOP JEDEC MO-153 Variation AB-1						
SYMBOLS	DIMENSIONS IN MM (Control Unit)			DIMENSIONS IN INCH (Reference Unit)		
	MIN	NOM	MAX	MIN	NOM	MAX
A	—	—	1.20	—	—	0.047
A1	0.05	—	0.15	0.002	—	0.006
A2	0.80	1.00	1.05	0.031	0.039	0.041
b	0.19	—	0.30	0.007	—	0.012
c	0.09	—	0.20	0.004	—	0.008
E	6.40 BSC			0.252 BSC		
E1	4.30	4.40	4.50	0.169	0.173	0.177
e	0.65 BSC			0.026 BSC		
L	0.45	0.60	0.75	0.018	0.024	0.030
L1	1.00 REF			0.039 REF		
L2	0.25 BSC			0.010 BSC		
R	0.09	—	—	0.035	—	—
R1	0.09	—	—	0.035	—	—
θ	12° REF			12° REF		
θ1	0°	—	8°	0°	—	8°
D	4.90	5.00	5.10	0.193	0.197	0.200
N	14			14		

Ordering Information

Part Number	Package	Green	Operating Temperature Range	Packaging
XR8051 Ordering Information				
XR8051AST5X	TSOT-5	Yes	-40°C to +125°C	Tape & Reel
XR8051AST5MTR	TSOT-5	Yes	-40°C to +125°C	Tape & Reel
XR8051AST5EVB	Evaluation Board	N/A	N/A	N/A
XR8051ASO8X	SOIC-8	Yes	-40°C to +125°C	Tape & Reel
XR8051ASO8MTR	SOIC-8	Yes	-40°C to +125°C	Tape & Reel
XR8051ASO8EVB	Evaluation Board	N/A	N/A	N/A
XR8052 Ordering Information				
XR8052ASO8X	SOIC-8	Yes	-40°C to +125°C	Tape & Reel
XR8052ASO8MTR	SOIC-8	Yes	-40°C to +125°C	Tape & Reel
XR8052ASO8EVB	Evaluation Board	N/A	N/A	N/A
XR8052AMP8X	MSOP-8	Yes	-40°C to +125°C	Tape & Reel
XR8052AMP8MTR	MSOP-8	Yes	-40°C to +125°C	Tape & Reel
XR8052AMP8EVB	Evaluation Board	N/A	N/A	N/A
XR8054 Ordering Information				
XR8054ATP14X	TSSOP-14	Yes	-40°C to +125°C	Tape & Reel
XR8054ATP14MTR	TSSOP-14	Yes	-40°C to +125°C	Tape & Reel
XR8054ATP14EVB	Evaluation Board	N/A	N/A	N/A
XR8054ASO14X	SOIC-14	Yes	-40°C to +125°C	Tape & Reel
XR8054ASO14MTR	SOIC-14	Yes	-40°C to +125°C	Tape & Reel
XR8054ASO14EVB	Evaluation Board	N/A	N/A	N/A

Moisture sensitivity level for all parts is MSL-1. Mini tape and reel quantity is 250.

© 2007-2014 Exar Corporation

Revision History

Revision	Date	Description
1B (ECN 1451-05)	December 2014	Reformat into Exar data sheet template. Updated ordering information table to include MTR and EVB part numbers. Updated thermal resistance numbers and package outline drawings. Updated typical small signal bandwidth specifications and plots.

For Further Assistance:

Email: CustomerSupport@exar.com or HPATechSupport@exar.com

Exar Technical Documentation: http://www.exar.com/techdoc/

Exar Corporation Headquarters and Sales Offices
48760 Kato Road Tel.: +1 (510) 668-7000
Fremont, CA 94538 - USA Fax: +1 (510) 668-7001

A New Direction in Mixed-Signal

NOTICE

EXAR Corporation reserves the right to make changes to the products contained in this publication in order to improve design, performance or reliability. EXAR Corporation assumes no responsibility for the use of any circuits described herein, conveys no license under any patent or other right, and makes no representation that the circuits are free of patent infringement. Charts and schedules contained here in are only for illustration purposes and may vary depending upon a user's specific application. While the information in this publication has been carefully checked; no responsibility, however, is assumed for inaccuracies.

EXAR Corporation does not recommend the use of any of its products in life support applications where the failure or malfunction of the product can reasonably be expected to cause failure of the life support system or to significantly affect its safety or effectiveness. Products are not authorized for use in such applications unless EXAR Corporation receives, in writing, assurances to its satisfaction that: (a) the risk of injury or damage has been minimized; (b) the user assumes all such risks; (c) potential liability of EXAR Corporation is adequately protected under the circumstances.

Reproduction, in part or whole, without the prior written consent of EXAR Corporation is prohibited.

© 2007-2014 Exar Corporation