2-Line Chip Style Common Mode Chokes

ChipChoke™ CCMC Series

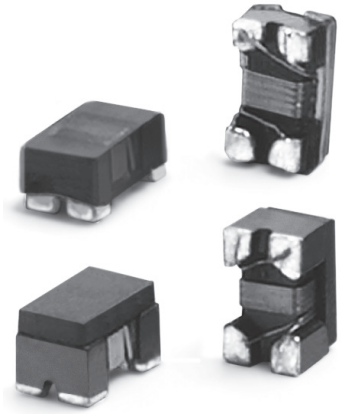

- *Available in 0805 (2012) and 1206 (3216) size*
- *For USB2.0, 3.0 and other high speed differential signal lines (IEEE1394, LVDS)*
- *Suppression of common mode noise without attenuating the signal*
- *Large range of common mode impedance to fit with signal and noise level*
- *Magnetic shield versions available for lower Rdc and higher current features*

Electrical Specifications @ 25°C						
Part Number (25%)	**Common Mode Impedance** @ 100MHz (Ω)	**DC Resistance** (Ω MAX)	**Rated Voltage** (Vdc)	**Rated Current** (mA MAX)	**Withstanding Voltage** (Vdc)	**Insulation Resistance** (MΩ MIN)
0805CCMCXTS - Magnetic Shield - 0805 Size						
PE-0805CCMC670STS	67	0.25	50	400	125	10
PE-0805CCMC900STS	90	0.35	50	330	125	10
PE-0805CCMC121STS	120	0.30	50	370	125	10
PE-0805CCMC181STS	180	0.35	50	330	125	10
PE-0805CCMC261STS	260	0.40	50	300	125	10
PE-0805CCMC361STS	360	0.45	50	280	125	10
1206CCMCXTS - Magnetic Shield - 1206 Size						
PE-1206CCMC900STS	90	0.3	50	370	125	10
PE-1206CCMC161STS	160	0.40	50	340	125	10
PE-1206CCMC261STS	260	0.50	50	310	125	10
PE-1206CCMC601STS	600	0.80	50	260	125	10
PE-1206CCMC102STS	1000	1.00	50	230	125	10
PE-1206CCMC222STS	2200	1.20	50	200	125	10

Notes:

1. These part numbers are lead free and RoHS compliant. No additional suffix or identifier is required.

Mechanicals

0805 TS, 1206 TS

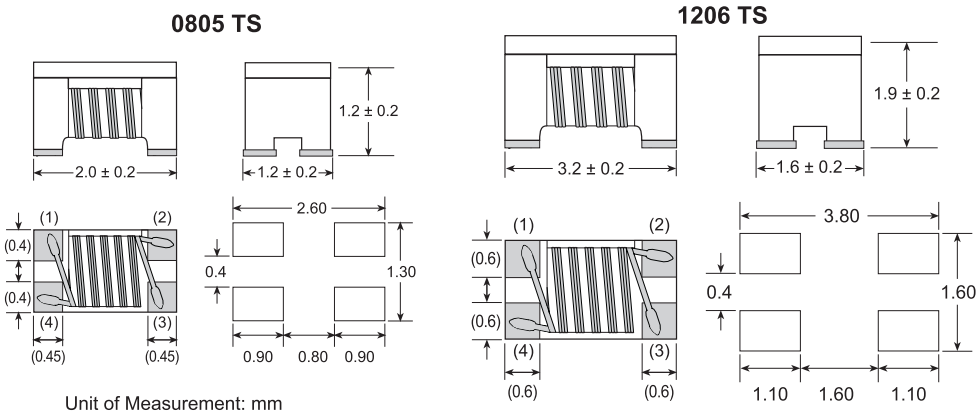

Unit of Measurement: mm

Part Number Legend

PE-0805CCMC670STH

PE - 0805 CCMC 670 S T S

PACKAGE SIZE
(0805 or 1206)

ChipChoke™ COMMON MODE CHOKES

IMPEDANCE (Ω)
Representative of the impedance value

TOLERANCE
S = 25%(standard)

PACKAGING
T = Tape & Reel (7″ reel)

SIZE	QTY/REEL
0805	2000 pieces
1206	2000 pieces

COATING
S = Magnetic Shield

Schematics

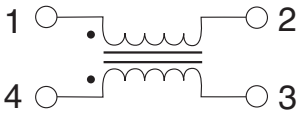

Tape and Reel Specifications

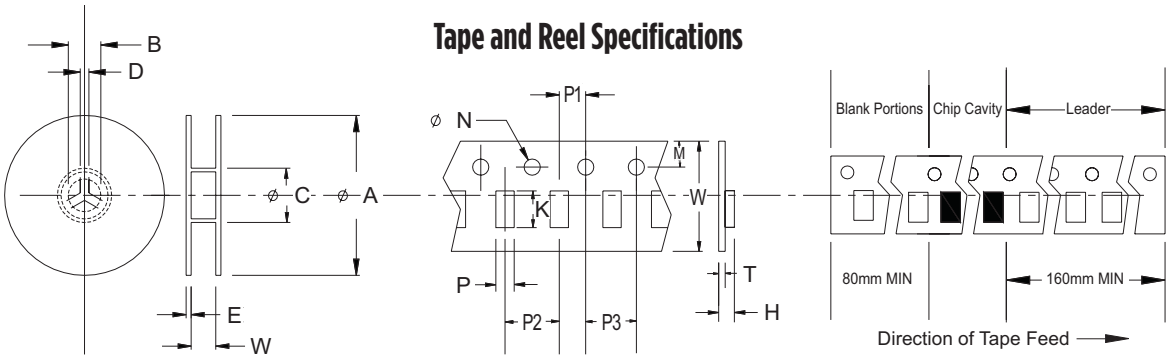

Packaging Specifications

Series	Parts per Reel	Reel Dimensions (mm)					Tape Dimensions (mm)									
		A	B	C	D	E	W	P1	P2	P3	H	T	K	M	N	P
0805 TS	2000	178	21	75	2.0	2.5	8.0	2.0	4.0	4.0	1.30	0.3	2.25	1.75	1.5	1.42
1206 TS	2000	178	21	75	2.0	2.5	8.0	2.0	4.0	4.0	2.10	0.2	3.50	1.75	1.5	1.90

Impedance vs Frequency

PE-0805CCMCXXXSTS

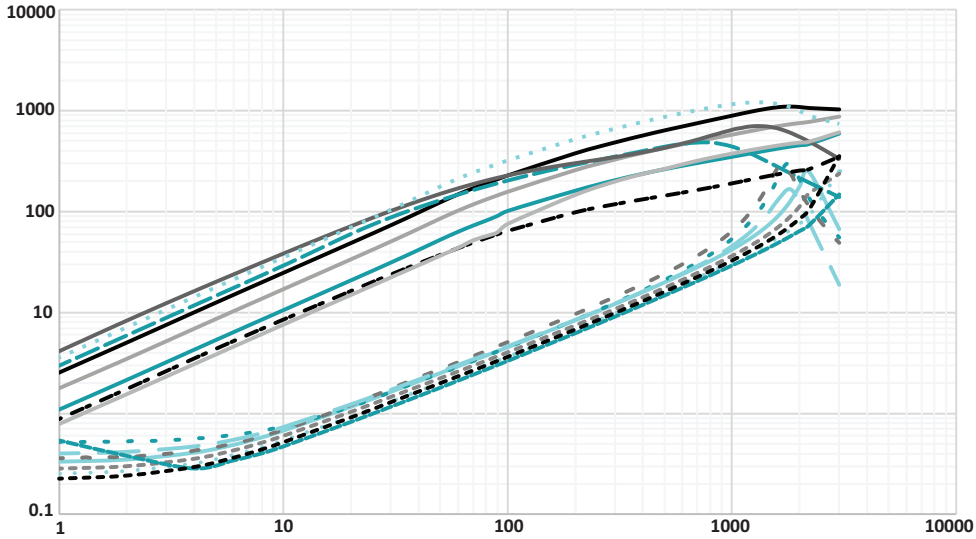

Common Mode	
ITEM	**Part Number**
	PE-0805CCM670STS
	PE-0805CCM900STS
	PE-0805CCM121STS
	PE-0805CCM181STS
	PE-0805CCM261STS
	PE-0805CCM361STS

Differential Mode	
ITEM	**Part Number**
	PE-0805CCM670STS
	PE-0805CCM900STS
	PE-0805CCM121STS
	PE-0805CCM181STS
	PE-0805CCM261STS
	PE-0805CCM361STS

2-Line Chip Style Common Mode Cokes

ChipChoke™ CCMC Series

Impedance vs Frequency

PE-1206CCMCXXXSTS

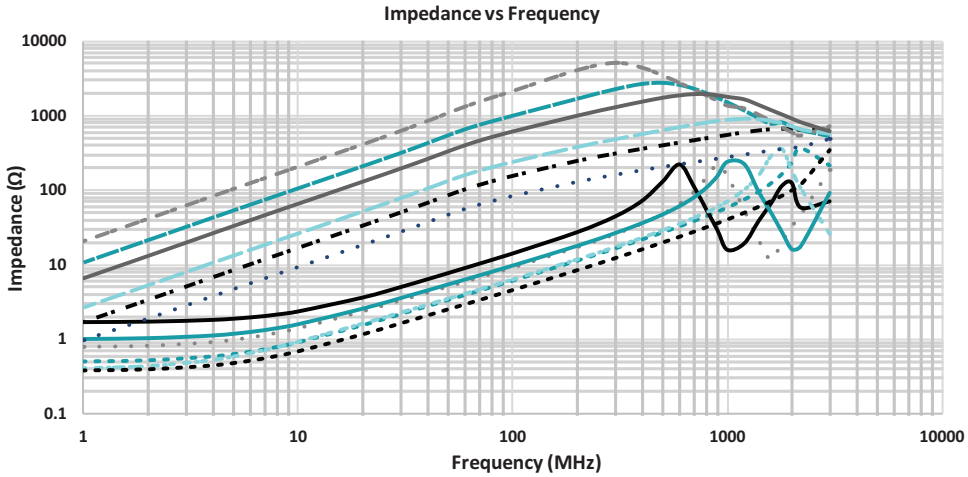

Common Mode

ITEM	Part Number
	PE-1206CCM900STS
	PE-1206CCM161STS
	PE-1206CCM261STS
	PE-1206CCM601STS
	PE-1206CCM102STS
	PE-1206CCM222STS

Differential Mode

ITEM	Part Number
	PE-1206CCM900STS
	PE-1206CCM161STS
	PE-1206CCM261STS
	PE-1206CCM601STS
	PE-1206CCM102STS
	PE-1206CCM222STS

For More Information

Pulse Worldwide Headquarters
12220 World Trade Drive
San Diego, CA
92128
U.S.A.

Tel: 858 674 8100

Pulse Europe
Zeppelinstrasse 15
D-71083 Herrenberg
Germany

Tel: 49 7032 7806 0
Fax: 49 7032 7806 135

Pulse China Headquarters
B402, Shenzhen Academy of Aerospace Technology Bldg.
10th Kejinan Road
High-Tech Zone
Nanshan District
Shenzen, PR China
518057

Pulse North China
Room 2704/2705
Super Ocean Finance Ctr.
2067 Yan An Road West
Shanghai 200336
China

Pulse South Asia
135 Joo Seng Road
#03-02
PM Industrial Bldg.
Singapore 368363

Tel: 65 6287 8998
Fax: 65 6287 8998

Pulse North Asia
3F, No. 198
Zhongyuan Road
Zhongli City
Taoyuan County 320
Taiwan R. O. C.
Tel: 886 3 4356768
Fax: 886 3 4356823
(Pulse)

Performance warranty of products offered on this data sheet is limited to the parameters specified. Data is subject to change without notice. Other brand and product names mentioned herein may be trademarks or registered trademarks of their respective owners. © Copyright, 2015. Pulse Electronics, Inc. All rights reserved.