Technical Datasheet

Lamp LEDs are effective in hot thermal and humid condition. This high brightness and weather-resistant packaging design makes these Lamp LEDs ideal for outdoor applications such as traffic signals, variable message signs and backlighting for transparent sign panels

Features

- High luminous white emission
- Non-standoff leads
- 5mm package
- Viewing angle : 60 º
- Color Coordinates : x=0.45 y=0.41

Applications

- Electronic signs and signals
- Specialty lighting
- Small area illumination
- Torches and head lamps
- Interior lighting
- Outdoor displays

Outline Dimensions

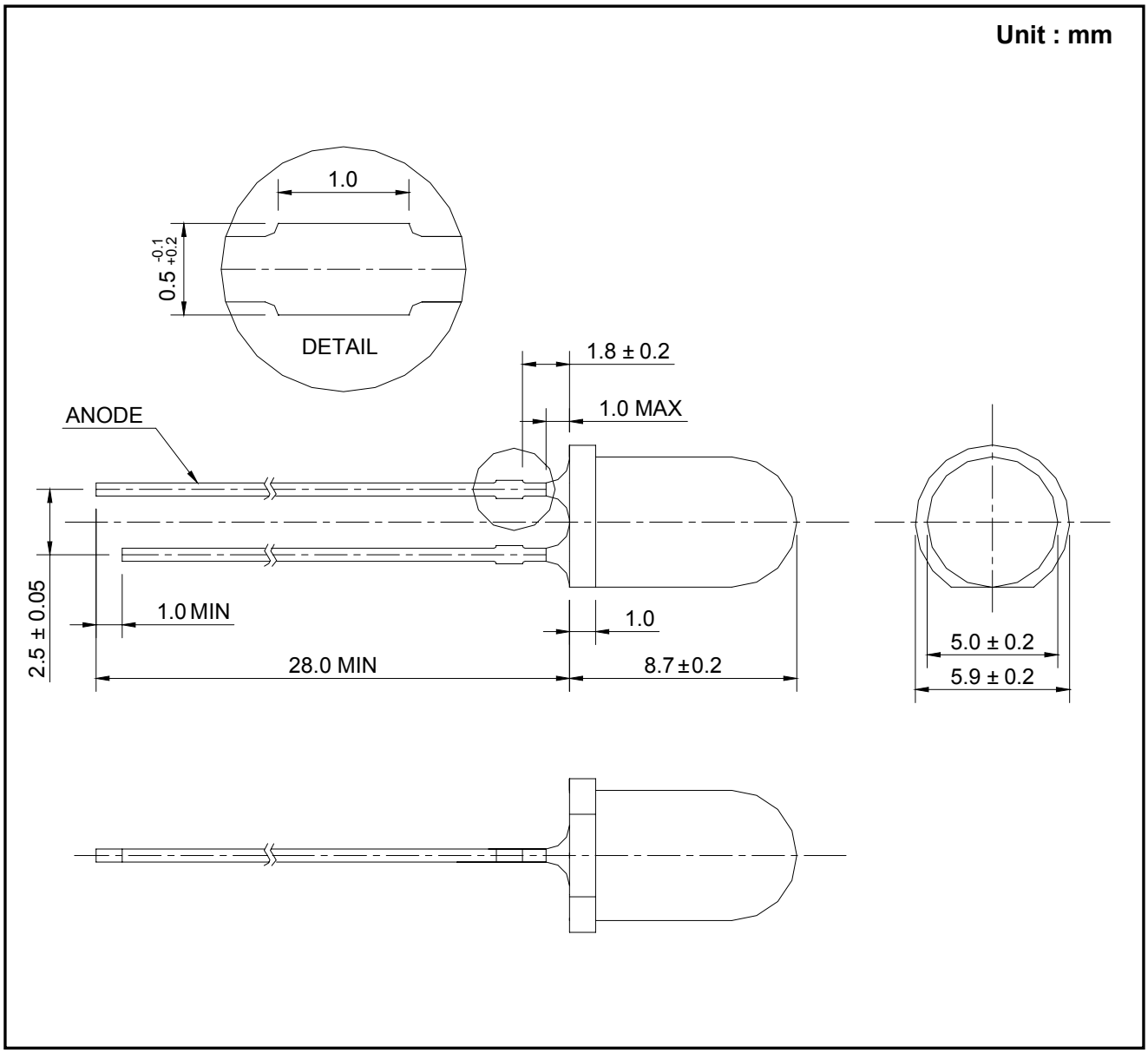

Notes : Protruded epoxy is 1.0mm maximum.

Electro-Optical Characteristics (T_a = 25ºC, I_F=20mA)

Item	Symbol	Value			Unit
		Min.	Typ.	Max.	
Luminous Intensity [1]	I_V [2]	1200	2200	-	mcd
Luminous Flux	Φ_V	-	2.7	-	lm
Chromaticity Coordinate [3]	x, y	x=0.45, y=0.41			-
Forward Voltage [4]	V_F	-	3.2	3.8	V
View Angle	$2\theta_{½}$	60			deg.
Thermal Resistance	$R\Theta_{J-A}$	285			ºC /W
Optical Efficiency	η_{elc}	-	42	-	lm/W
Reverse Current (at V_R = 5V)	I_R	-	-	5	μA

Absolute Maximum Ratings (T_a = 25ºC)

Item	Symbol	Value	Unit
DC Forward Current	I_F	30	mA
Forward Peak Pulse Current	I_{FP} [5]	100	mA
Reverse Voltage	V_R	5	V
Power Dissipation	P_D	114	mW
Operating Temperature	T_{opr}	-30 ~ 85	ºC
Storage Temperature	T_{stg}	-40 ~ 100	ºC
Solder Temperature	T_s	260ºC for 10seconds [6]	ºC

Notes :

[1] SSC maintains a tolerance of ±10% on intensity and power measurements.

[2] I_V is the luminous intensity output as measured with a cylinder.

[3] Correlated Color Temperature is derived from the CIE 1931 Chromaticity diagram.
Color Coordinates Measurement allowance is ± 0.01

[4] A tolerance of ±0.05V on forward voltage measurements

[5] $t \leq$ 0.1ms, D = 1/10

[6] No lower than 3mm from the base of the epoxy bulb.

Reliability Tests

Item	Condition	Note	Failures
Life Test	T_a = RT, I_F = 30mA	1000hrs	0/40
High Temperature Operating	T_a = 85ºC, I_F = 8mA	1000hrs	0/40
Low Temperature Operating	T_a = -30ºC, I_F = 20mA	1000hrs	0/40
Thermal Shock	T_a = -40ºC (30min) ~ 100º (30min) (Transfer time : 10sec, 1Cycle = 1hr)	100 cycles	0/50
Resistance to soldering Heat	T_s = 255 ± 5ºC, t = 10sec	1 time	0/50
ESD (Human Body Model)	1kV, 1.5kΩ ; 100pF	1 time	0/40
High Temperature Storage	T_a = 100ºC	1000hrs	0/50
Low Temperature Storage	T_a = -40ºC	1000hrs	0/50
Temperature Humidity Storage	T_a = 85ºC, RH = 85%	1000hrs	0/50
Temperature Humidity Operating	T_a = 85ºC, RH = 85%, I_F = 8mA	100hrs	0/40

< Judging Criteria For Reliability Tests >

V_F	USL[1] X 1.2
I_R	USL X 2.0
Φ_V	LSL [2] X 0.5

Notes :
[1] USL : Upper Standard Level
[2] LSL : Lower Standard Level.

Characteristic Diagrams

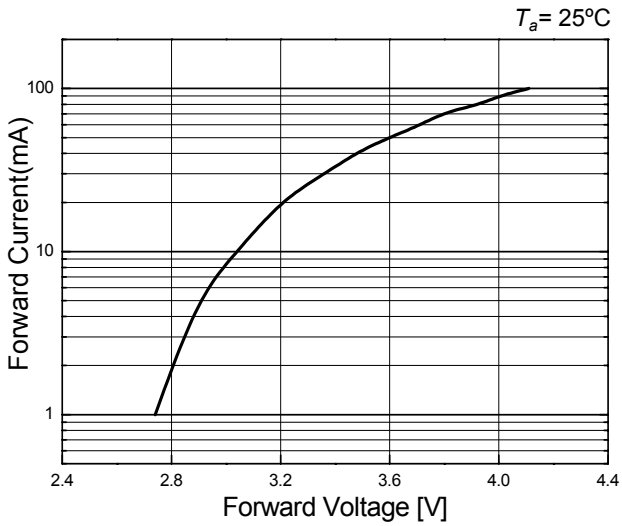

Forward Voltage vs. Forward Current

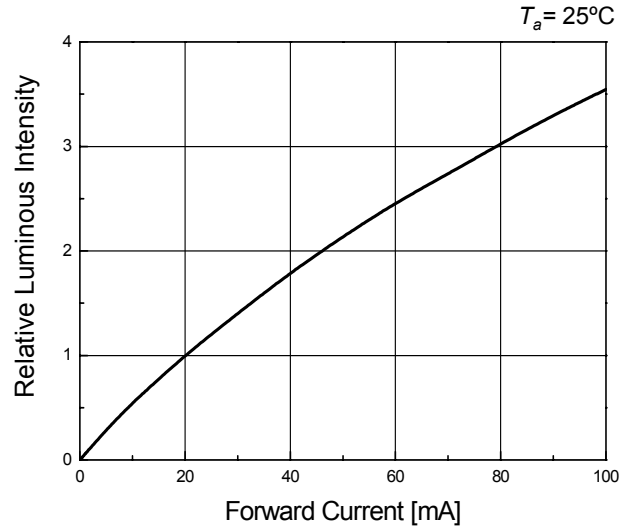

Forward Current vs. Relative Intensity

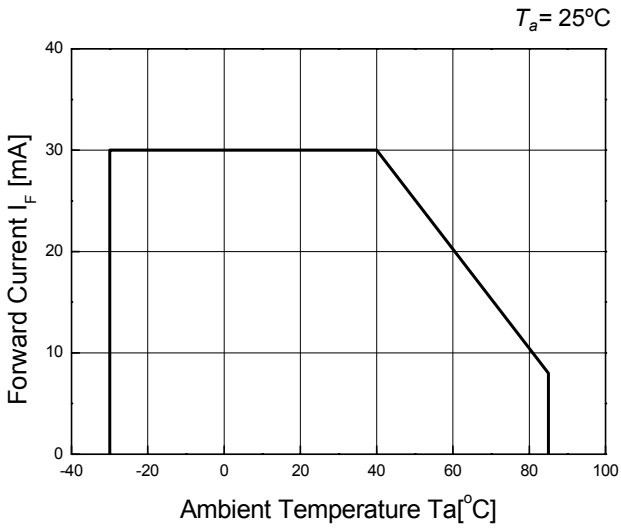

Ambient Temperature vs. Forward Current

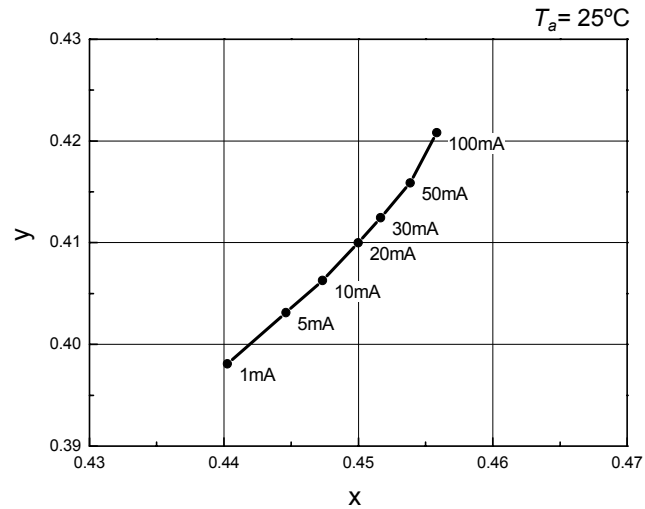

Forward Current vs. Chromaticity Coordinate

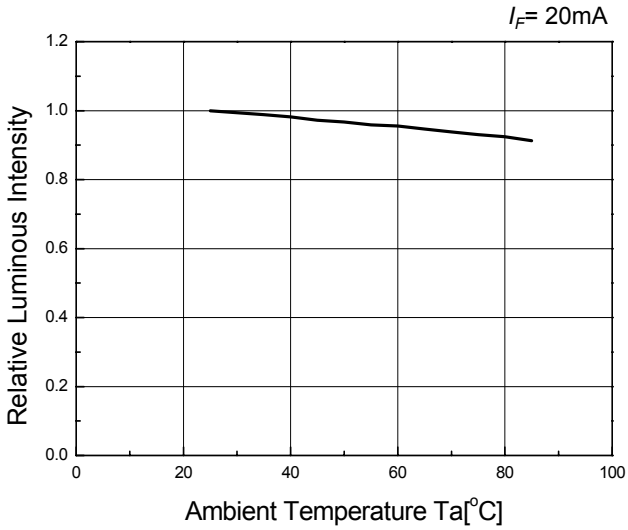

Ambient Temperature vs. Relative Intensity

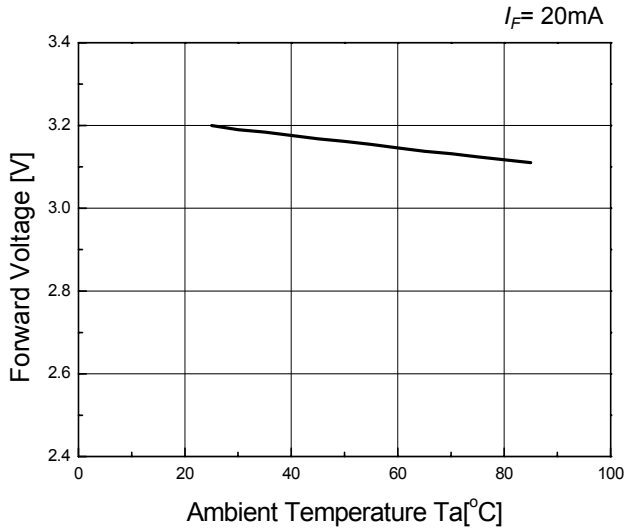

Ambient Temperature vs. Forward Voltage

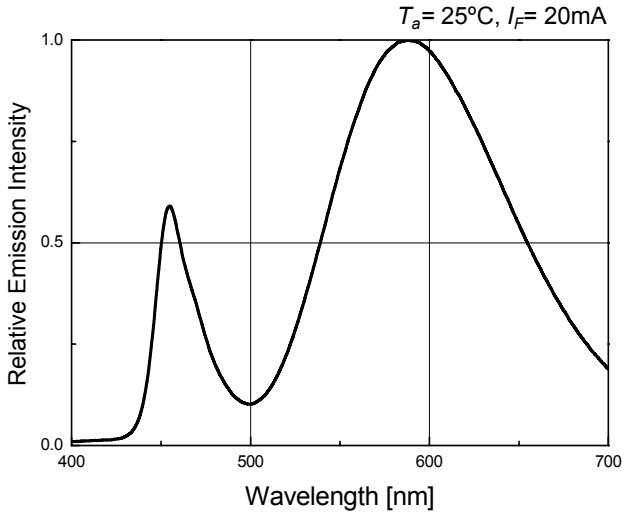

Spectrum

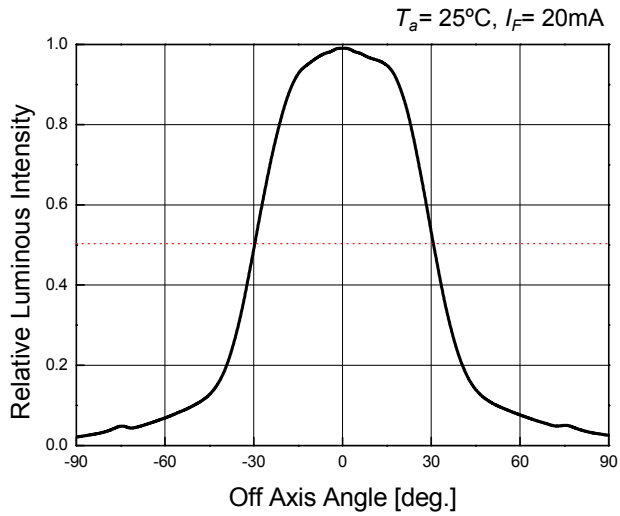

Directivity

Color Ranks

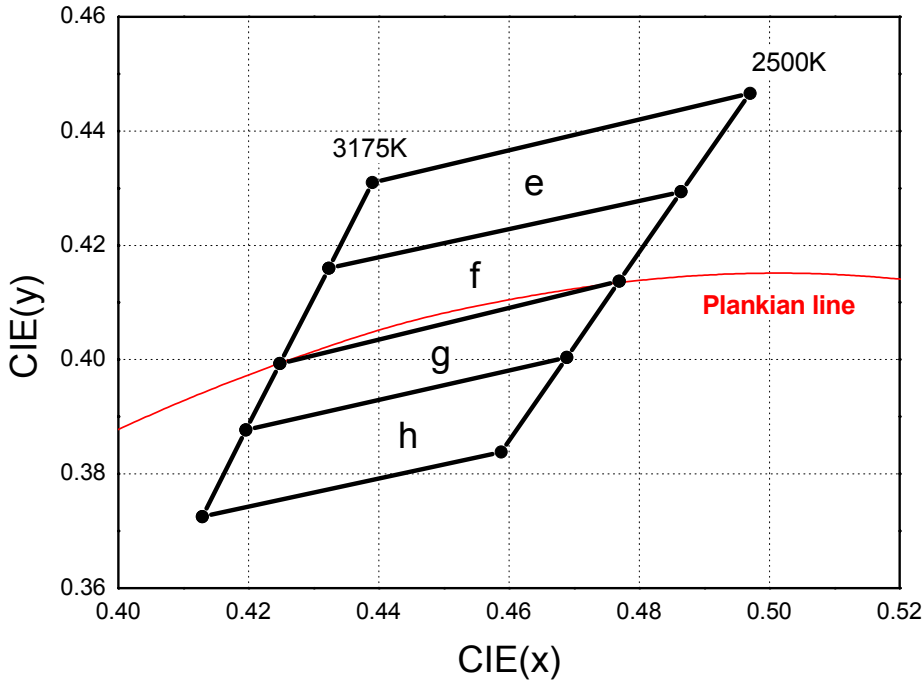

	Rank e			
x	0.4390	0.4323	0.4864	0.4970
y	0.4310	0.4160	0.4294	0.4466

	Rank f			
x	0.4323	0.4248	0.4769	0.4864
y	0.4160	0.3993	0.4137	0.4294

	Rank g			
x	0.4248	0.4196	0.4689	0.4769
y	0.3993	0.3877	0.4004	0.4137

	Rank h			
x	0.4196	0.4129	0.4588	0.4689
y	0.3877	0.3725	0.3838	0.4004

Note : Color Coordinates Measurement allowance is ± 0.01

Bin Code Description

Bin Code		
Luminous Intensity	CIE	Forward Voltage
O	f	4

Luminous Intensity (mcd) @ I_F = 20mA		
Bin Code	Min.	Max.
N	1200	1650
O	1650	2300
P	2300	3200
Q	3200	4400

Color Rank @ I_F = 20mA
e
f
g
h

Forward Voltage (V) @ I_F = 20mA		
Bin Code	Min.	Max.
1	2.6	2.8
2	2.8	3.0
3	3.0	3.2
4	3.2	3.4
5	3.4	3.6
6	3.6	3.8

☐ **Not yet available ranks**

Packing

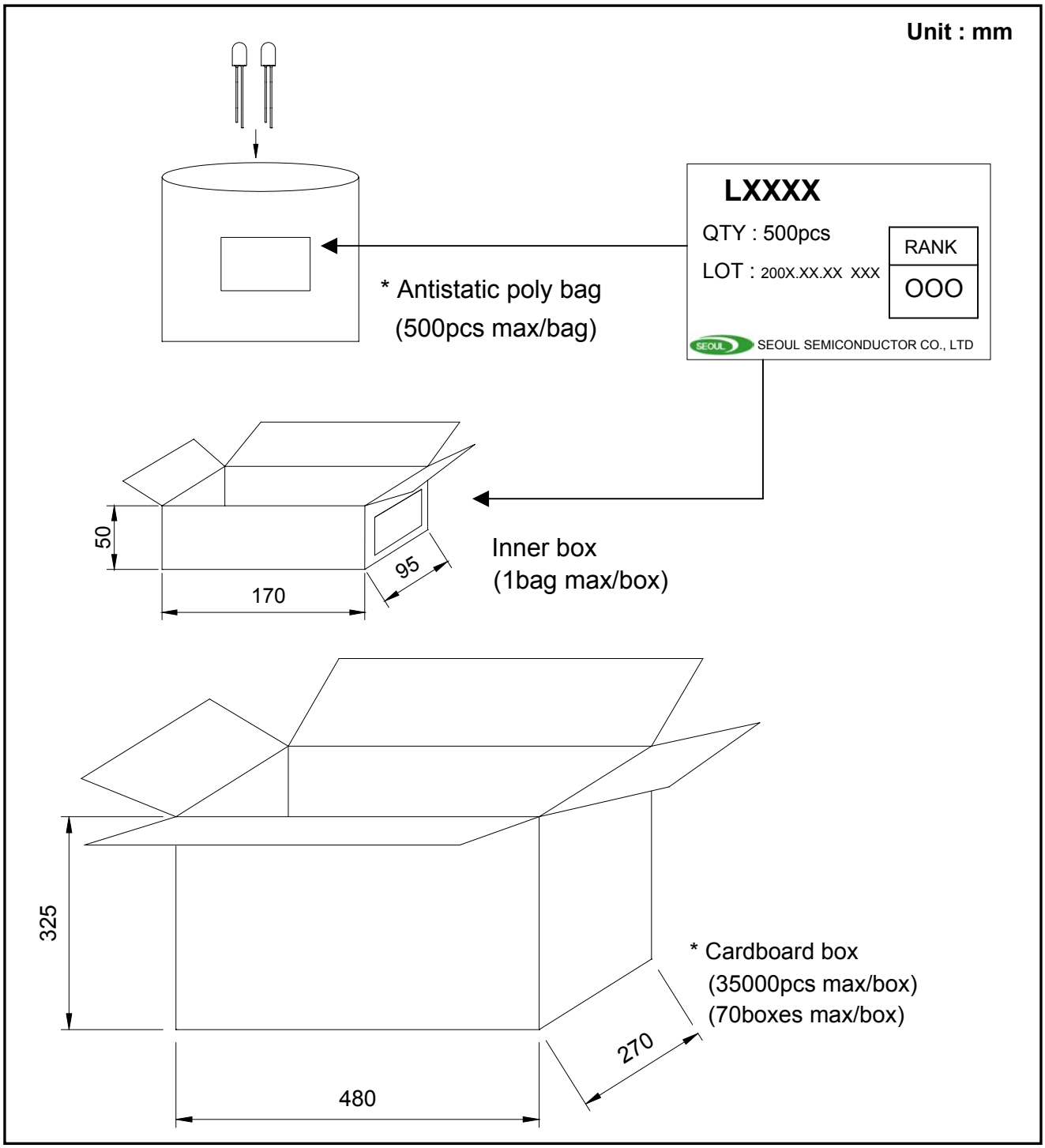
Unit : mm
LXXXX
QTY : 500pcs
LOT : 200X.XX.XX XXX
RANK
OOO
SEOUL SEMICONDUCTOR CO., LTD
* Antistatic poly bag
(500pcs max/bag)
50
170
95
Inner box
(1bag max/box)
325
480
270
* Cardboard box
(35000pcs max/box)
(70boxes max/box)

Soldering Profile

1) Wave Soldering Conditions / Profile

- Preliminary heating to be at 85ºC(120 ºC max) for 20 seconds(60 seconds max).
- Soldering heat to be at 255 ºC (260ºC max) for 10 seconds
- Soak time above 200 ºC is 5 seconds

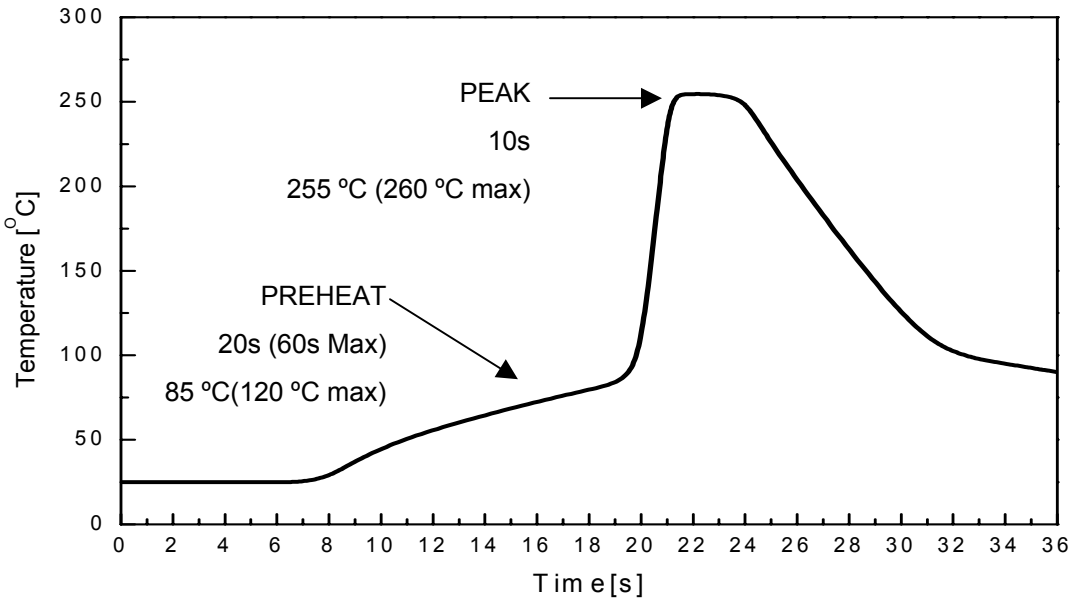

2) Hand Soldering conditions

- Not more than 3 seconds at max. 350ºC, under Soldering iron.

3) Caution

- Leadframes are silver plated copper alloy. This substance has a low thermal coefficient (easily conducts heat)
- The LEDs must not be repositioned after soldering.
- Do not apply any stress to the lead particularly when heat.

Note : In case the soldered products are reused in soldering process, we don't guarantee the products.

Precaution for Use

1) Storage

• Before opening the package

Avoid the absorption of moisture, we recommended to store Lamp LEDs in a dry box(or desiccators) with a desiccant . Otherwise, store them in the following environment:
Temperature : 5℃~30℃ Humidity : 50% max.

• After opening the package

a. Soldering should be done right after opening the package(within 24Hrs).

b. Keeping of a fraction

- Sealing
- Temperature : 5 ~ 40℃, Humidity : less than 30%

c. If the package has been opened more than 1week or the color of desiccant changes, Components should be dried for 10-12hr at 60±5℃

• Any mechanical force or any excess vibration shall not be accepted to apply during cooling process to normal temp. after soldering.

• Avoid quick cooling

• Leadframes are silver plated copper alloy. The silver plate surface may be affected by environments which contains corrosive substances. Please avoid conditions which may cause the LEDs to corrode, tarnish or discolor.

2) Lead Forming

• When the lead forming is required before soldering , care must be taken to avoid any bending and mechanical stress. The stress to the base may damage the LEDs.

• When mounting the LEDs onto a PCB, the holes on the circuit board should be exactly aligned with the leads of the LEDs.

• It is recommended that tooling made to precisely form and cut the leads to length rather than rely on hand operating.

3) Static Electricity

- Static Electricity and surge voltage damage the LEDs. So it is recommended that a wrist band or an anti-electrostatic glove be used when handling the LEDs.
- All devices, equipment and machinery must be properly grounded. It is recommended precautions be taken against surge voltage to the equipment that mounts the LEDs.

4) Heat Generation

- Thermal is one of the important parameter to design the end product. Please consider the heat generation of the LEDs.
- The operating current should be decided after considering the ambient maximum temperature of LEDs.

5) Others

- The color of the LEDs is changed a little by an operating current and thermal.
- Anti radioactive ray design is not considered for the products listed here in.
- Gallium arsenide is used in some of the products listed in this publication. These products are dangerous if they are burned or smashed in the process of disposal. It is also dangerous to drink the liquid or inhale the gas generated by such products when chemically disposed.
- This device should not be used in any type of fluid such as water, oil, organic solvent and etc. When washing is required, IPA(Isopropyl Alcohol) should be used.
- When the LEDs are illuminating, operating current should be decided after considering the junction temperature.

  Cf.) Please refer *Ambient temperature vs. Forward Current* graph on page 5
- The appearance and specifications of the product may be modified for improvement without notice.

SEOUL SEMICONDUCTOR CO., LTD.
148-29, Kasan-Dong, Keumchun-Gu, Seoul, Korea
TEL : +82-2-3281-6269 FAX :+82-2-857-5430
www.seoulsemicon.com www.zled.com