OV9762 HD product brief

Best-In-Class 720p High Definition Video For Front-Facing Cameras in Smartphones and Tablets

lead free

available in a lead-free package

The OV9762 is a high performance CameraChip™ sensor designed specifically for front-facing camera applications in smartphones and tablets. The OV9762 leverages OmniVision's first 1.87-micron OmniBSI-2™ pixel to deliver improved performance and best-in-class 720p high definition (HD) video at 30 frames per second (fps).

The sensor's slightly larger 1.87-micron pixel enables enhanced image and video quality in a compact package that is pin-to-pin compatible with the previous-generation OV9760 CameraChip sensor.

The OV9762 can record 1.3-megapixel (1376 x 960 pixels) video at 30 fps, or best-in-class 720p HD video at 30 fps with electronic image stabilization (EIS). When binned to VGA resolution (640 x 480 pixels) video, the sensor delivers twice the sensitivity compared to full resolution, ensuring high quality video capture in difficult low-light conditions.

The OV9762 fits into a 4.3 x 4.1 mm package.

Find out more at www.ovt.com.

OmniVision

OV9762

Applications

- Cellular Phones
- Digital Still Cameras (DSC)
- Digital Video Camcorders (DVC)
- PC Multimedia

Product Features

- automatic black level calibration (ABLC)
- programmable controls for frame rate, mirror and flip, cropping and windowing
- image quality controls: defective pixel canceling
- supports output formats: 10-bit RAW RGB MIPI
- supports horizontal and vertical subsampling
- supports images sizes: 1376x960, 688x480, 344x240
- fast mode switching
- support 2x2 binning
- standard serial SCCB interface
- supports MIPI data transfer rate of up to 1 Gbps
- one-lane MIPI serial output interface with slew rate control
- embedded 8K bits one-time programmable (OTP) memory for part identification, etc.
- two on-chip phase lock loop (PLL)
- programmable I/O drive capability
- built-in 1.2V regulator for core
- built-in temperature sensor
- ambient light sensor (ALS) mode

Ordering Information

- **OV09762-G04A**
  (color, chip probing, 200 µm backgrinding, reconstructed wafer with good die)
- **OV09762-G05A**
  (color, chip probing, 150 µm backgrinding, reconstructed wafer with good die)

Product Specifications

- **active array size:** 1376 x 960
- **power supply:**
  - **core:** 1.08 - 1.32V
  - **analog:** 2.7 - 3.0V
  - **I/O:** 1.62 - 1.98V
- **power requirements:**
  - I_{DD-A}: 23 mA
  - I_{DD-IO}: 37 mA
  - **XSHUTDOWN:** 5 µA
- **temperature range:**
  - **operating:** -40°C to 85°C junction temperature
  - **stable image:** -15°C to 65°C junction temperature
- **output formats:** 10-bit RAW RGB data
- **lens size:** 1/5.7"
- **lens chief ray angle:** 28.1°
- **input clock frequency:** 6 - 27 MHz
- **max S/N ratio:** 38.6 dB
- **dynamic range:** 73 dB @ 16x gain
- **maximum image transfer rate:**
  - **1376 x 960:** 30 fps
  - **688 x 480:** 60 fps
  - **344 x 240:** 120 fps
- **sensitivity:** 1450 mV/lux-sec
- **scan mode:** progressive
- **maximum exposure interval:** 1000 x t_{ROW}
- **pixel size:** 1.87 µm x 1.87 µm
- **dark current:** 31 e^-/sec @ 60°C junction temperature
- **image area:** 2618 µm x 1840.08 µm

Functional Block Diagram

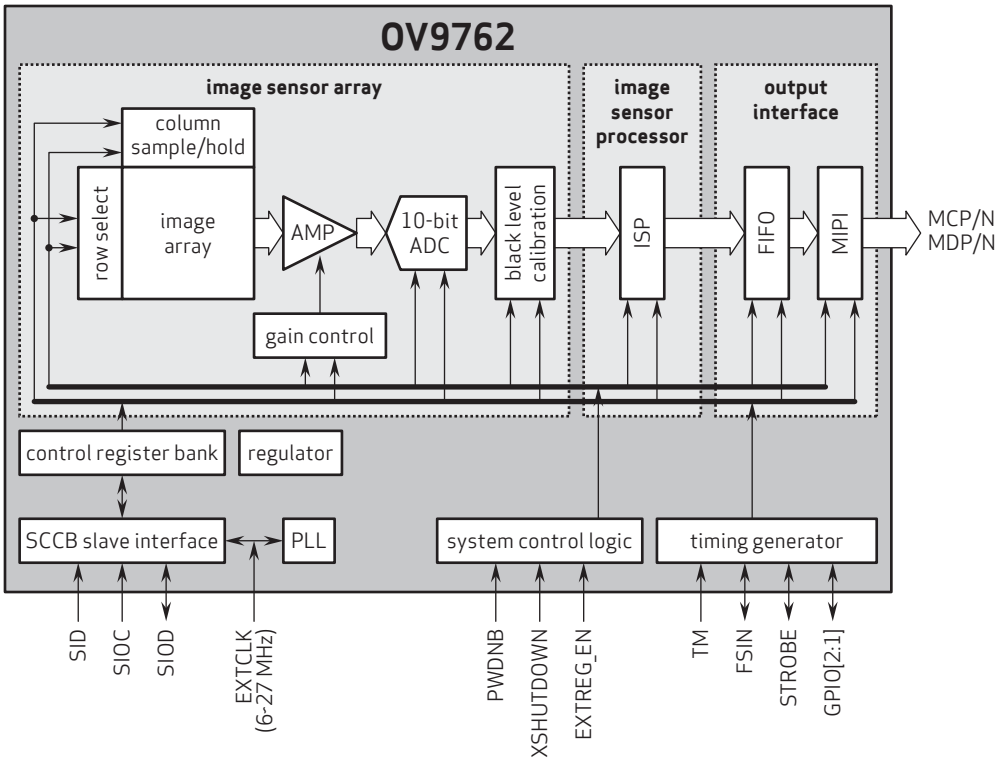

4275 Burton Drive
Santa Clara, CA 95054
USA

Tel: + 1 408 567 3000
Fax: + 1 408 567 3001
www.ovt.com

Version 1.0, January, 2014